Fiber Optic

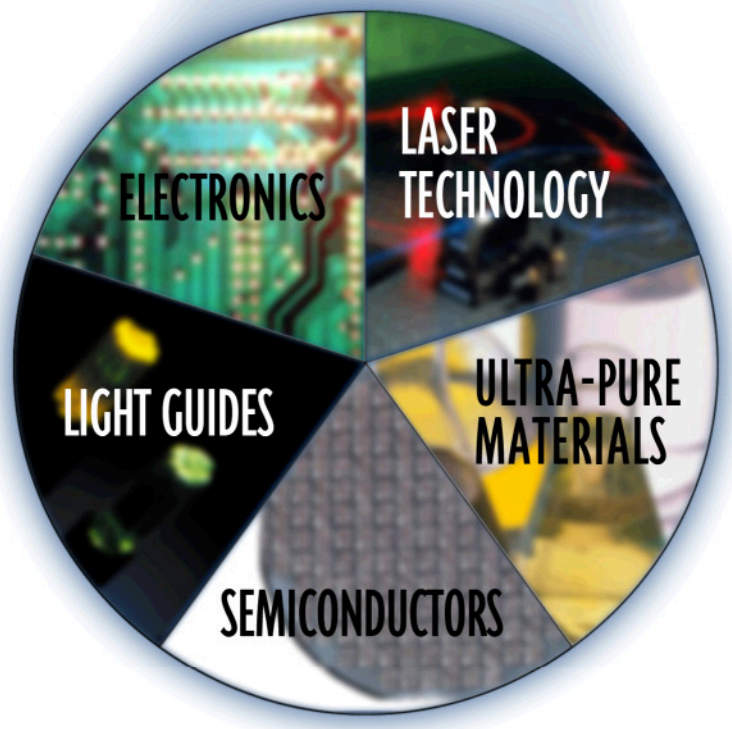

Mini-Course

*

Copyright © 2011
Previous Printings 2001, 1992, 1990, 1989
By Industrial Fiber Optics, Inc.
Revision B

Printed in the United States of America

* * *

All rights reserved. No part of this publication may be reproduced, stored in a retrieval system, or transmitted in any form or by any means (electronic, mechanical, photocopying, recording, or otherwise) without prior written permission from Industrial Fiber Optics, Inc.

* * * * *

INDUSTRIAL FIBER OPTICS
1725 West 1st Street
Tempe, AZ 85281-7622
USA

Table of Contents

History & Introduction to Fiber Optics 1
Fiber Optic Communications 3
Review of Light & Geometric Optics 6
The Fundamentals of Optical Fibers 8
Light Sources & their Characteristics 11
Transmitter Components 14
Detectors for Fiber Optic Receivers 16
Elements of Fiber Optic Receivers 18
Passive Optical Interconnections. 20
Fiber Optic System Design & Analysis 23
Fiber Optic Test Equipment & Tools 25
Industrial Applications of Fiber Optics 27

Lab Session I 32
Lab Session II 34

References 36

Glossary 37

This publication serves as an introduction to fiber optics for instructors and their students. It addresses the subject with basic mathematical formulas and includes principles of fiber optics, its components (such as the fiber itself, receivers and transmitters), system design, completed systems, test equipment and industrial applications. The main section of the handbook is followed by two lab sessions, list of references (books, magazines and professional organizations), and a glossary of fiber optic terms used in the handbook and in the field of fiber optics. No prior knowledge of this subject is needed to understand and use this handbook. It will serve as a useful reference for the professional and student as fiber optics becomes a part of their everyday lives.

Warranty Information

This kit was carefully inspected before leaving the factory. *Industrial Fiber Optics* products are warranted against missing parts and defects in materials for 90 days. Since soldering and incorrect assembly can damage electrical components, no warranty can be made after assembly has begun. If any parts become damaged, replacements may be obtained from most radio/electronics supply shops. Refer to the parts list on page 32 of this manual for identification.

Industrial Fiber Optics recognizes that responsible service to our customers is the basis of our continued operation. We welcome and solicit your feedback about our products and how they might be modified to best suit your needs.

History & Introduction to Fiber Optics

Fiber optics is essentially a method of carrying information from one point to another. An optical fiber is a thin strand of glass or plastic over which information passes. It serves the same basic function as copper wire, but the fiber carries light instead of electricity. In doing so, it offers many distinct advantages which make fiber optics the best transmission medium in applications ranging from telecommunications to computers to automated factories.

A basic fiber optic system is a link connecting two electronic circuits. Figure 1 shows the main parts of such a link:

Transmitter, which converts an electrical signal into a light signal. A "source" (either a light emitting diode or laser diode) does the actual conversion. A drive circuit changes the electrical signal fed to the transmitter into a form required by the source.

Fiber optic cable, the medium for carrying the light. The cable includes the fiber and its protective covering.

Receiver, which accepts the light and converts it back to an electrical signal. The two basic parts of a receiver are the detector, which converts the light signal to an electrical signal, and the output circuit, which amplifies and, if necessary, reshapes the electrical signal before passing it on.

Connectors, which connect the fibers to the source, detector and other fibers.

As with most electronic systems, the transmitter and receiver circuits can be very simple or very complex.

History of Fiber Optics

Using light for communications is not new. In the United States, lanterns hung in a church signaled Paul Revere to begin his famous ride. Ships have used light to communicate through code, and lighthouses have warned of danger and greeted sailors home for centuries.

Claude Chappe built an optical telegraph in France during the 1790s. Signalmen in a series of towers stretching from Paris to Lille, a distance of 230 km, relayed signals to one another through movable mechanical arms. Messages could travel from end to end in about 15 minutes. In the early years of the United States, an optical telegraph linked Boston and a nearby island. These systems were later replaced by electric telegraphs.

The English natural philosopher John Tyndall, in 1870, demonstrated the principle of guiding light through internal reflections. In an exhibition before the Royal Society, he presented light bending around a corner as it traveled in a jet of pouring water. Water flowed through a horizontal spout near the bottom of a container, along a parabolic path through the air, and down into another container. When Tyndall aimed a beam of light out through the spout along with the water, his audience saw the light following a path inside the curved path of the water.

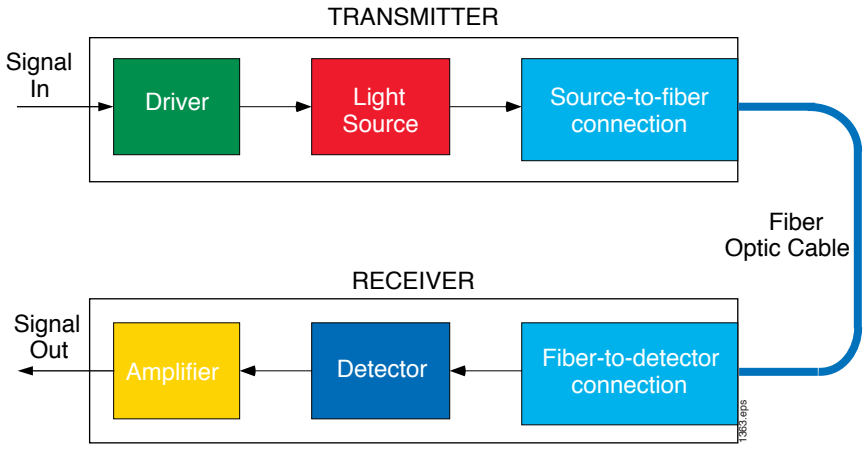

Figure 1. Components found in a basic fiber optic data link.

In 1880, an engineer named William Wheeler patented a scheme for piping light throughout a building. Not believing the incandescent bulb practical, Wheeler planned on using light from a bright electrical arc to illuminate distant rooms. He devised a series of pipes with reflective lining to be used inside the building.

Studies of how to control and use light continued through the twentieth century. Interest in glass waveguides increased in the 1950s, when research turned to glass rods for transmission of images. These are known as "fiberscopes" today, and are widely used in medicine. The term "fiber optics" was coined in 1956 with the invention of glass-coated rods.

In 1966, scientists at ITT proposed glass fiber as a transmission medium. Then, fiber had losses greater than 1000 dB/km. They determined if losses could be reduced to 20 dB/km, a level considered obtainable and quite suited for communication, fiber optic data communication would be practical. Today, losses in the best fibers are around 0.2 dB/km.

During the 1960s, many companies laid the groundwork to make them leaders in fiber optic technology. Corning Glass Works produced the first 20 dB/km fiber in 1970, and by 1972 losses were down to 4 dB/km. AMP produced the first low-cost fiber optic connector in 1974. In 1979 the fiber-optic pigtail was introduced by a joint effort of Motorola and AMP.

The Navy installed a fiber optic link aboard the USS *Little Rock* in 1973. The Air Force replaced the wiring harness of an A-7 aircraft in 1976. The original wiring harness had 302 cables and weighed 40 kg. The optical replacement had 12 fibers and a weight of 17 kg. The military was also responsible for one of the first operational fiber optic data links in 1977 — a 2 km, 20 Mbps (million bits per second) system for a satellite earth station.

The Bell System installed the first trial fiber optic telephone link at the Atlanta Works in 1976. The first field commercial trial occurred in 1977 near Chicago. It was a 44.7 Mbps, 2.5 km system with an outage rate of 0.0001% at the end of one year. (The Bell requirement was 0.02%.) In 1980, Bell announced a 1000 km project from Cambridge, MA, to Washington, DC.

Today these projects are history and fiber optics is a proven technology. Nevertheless, many new and exciting applications are currently being developed and the future is bright for many more.

Advantages

In its simplest terms, fiber optics is a communication means to link two electronic circuits. The fiber optic link may be between a computer and its peripherals, between two telephone switching offices, or between a machine and its controller in an automated manufacturing facility. Obvious questions concerning fiber optics are: *Why go to all the trouble of converting the signal to light and back? Why not just use wire?*

The answer lies in the following advantages of fiber optics.

- Wide bandwidth
- Low loss
- Electromagnetic immunity
- Security
- Light weight
- Small size
- Safety and electrical isolation

The importance of each advantage is application-dependent. In some cases, the wide bandwidth and low loss of fiber optics is the overriding factor. In others, security or safety are the determining factors. More details about the benefits of fiber optics will be covered in the next chapter.

Applications

A wide variety of fiber optic systems have been developed through many years of work. Examples of current fiber optic systems include:

- Long-haul telecommunications systems on land or at sea to carry many simultaneous calls over long distances
- Interoffice trunks carrying many simultaneous telephone conversations between local and regional telephone switching facilities
- Telephone lines with much higher speed than common single telephone lines
- Connections between microwave receivers and control facilities
- Links among computers and high-resolution video terminals used for such purposes as computer-aided design
- Cable television
- High-speed local-area networks
- Portable battlefield communication equipment
- Fiber optic gyroscopes for navigation
- Temperature, pressure, magnetic and acoustic sensors
- Illumination and imaging systems

Much of the early use of fiber optics involved data communications. Today, a significant amount of research is being conducted on developing fiber optic sensors. For example, concepts are being tested using optical fibers in aircraft wings and bridges to monitor stress. Optical fiber sensors have the unique advantage of being able to be used in very hostile environments such as high temperatures or in explosive gases.

This chapter introduces the important aspects of signals and their transmission. An understanding of the underlying principles of modern electronic communication is fundamental to understanding and appreciating fiber optics. The ideas presented here are fundamental not only to fiber optics, but also to all electronic communications.

Communications

Communication is the process of establishing a link between two points and passing information between them. Information is transmitted in the form of a signal. In electronics, a signal can be anything from the pulses running through a digital computer to the modulated radio waves of an FM radio broadcast. Such passing of information involves three activities: encoding, transmission and decoding.

Encoding is the process of placing information on a carrier. The vibration of your vocal cords places the code of your voice on air. Air is the carrier, changed to carry information by your vocal cords. Until it is changed in some way, a carrier contains no information. A steady oscillating wave electronic frequency can be transmitted from one point to another, but it contains no information unless data is encoded on it in some way. Conveying information, then, is the act of modifying the carrier. This modification is called ***modulation.***

The creation of a signal by impressing information on a carrier is shown in Figure 2. The high-frequency carrier, which in itself contains no information, has impressed on it a lower-frequency signal. The shape of the carrier is now modulated by the information. Although the simple example in the figure conveys very little information, the concept can be extended to convey a great deal. A Morse Code system can be based on the example shown. On the carrier, a low-frequency modulation can be impressed, with one or two periods in length corresponding to dots and dashes, respectively.

Once information has been encoded by modulating the carrier, it is ***transmitted.*** Transmission can occur over air, copper cables, through an optical fiber, or any other medium.

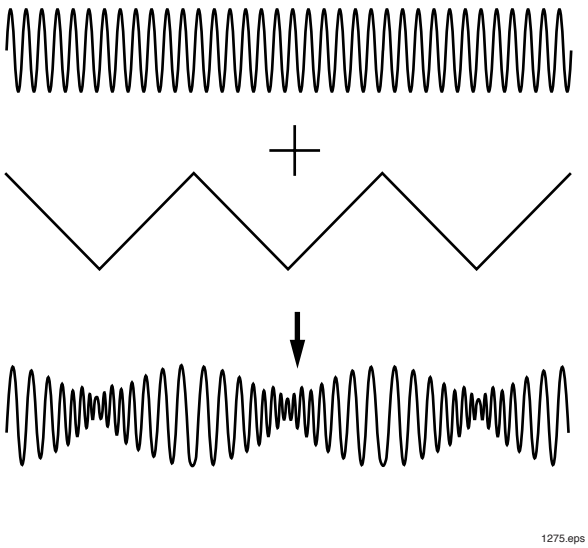

Figure 2. Basic modulation of signals.

At end of transmission, the receiver separates the information from the carrier in the ***decoding*** or demodulation process. A person's ear separates the vibrations of the air and turns then into nerve signals. Radio receivers strip away the high frequency carrier, while keeping the audio frequencies for further processing. In fiber optics, light is the carrier on which information is impressed.

There are three basic ways to modulate the carrier. See Figure 3 for examples.

Amplitude Modulation (AM) - A signal that varies continually (e.g., sound waves).

Frequency Modulation (FM) - Frequency modulation changes the frequency of the carrier to correspond to the differences in signal.

Digital Modulation - Signals that have been encoded in discrete levels, typically binary *ones* and *zeros*.

Amplitude Modulation (AM)

The world around us is analog. "Analog" implies continuous variation, like the moment of hands on a clock. Sound is analog. Ocean waves are analog. Analog is the variation of the amplitude in the medium. Before the invention of digital logic, everything was analog. In fact, the very first computers were analog.

Frequency Modulation (FM)

This type of modulation is used least in fiber optics due to difficulty of implementation. The transmitter must emit a single frequency and be stable. To demodulate an FM transmission a local optical oscillator must be used, and the oscillator must have a wavelength identical to that of the transmitter. FM radio does not suffer from these adverse characteristics, since radio frequencies are five decades lower and frequency control of electrical signals has been mastered.

Frequency modulation, however does offer the largest information bandwidth capabilities, and researchers are actively developing FM fiber optic links. Theoretical studies and demonstration systems have been constructed. Today, there are no commercial FM optical links in use, but students of today will see them in years to come.

Digital Modulation

The word "digital" implies numbers — distinct units, like the display of a digital watch. In a digital system, all information exists in numerical form.

The bit, the fundamental unit of digital information, has two states; a *one* or *zero.* In electronics, the presence or absence of a voltage is the most common digital representation. Unfortunately, the single bit 1 or 0 can represent only a single state, such as on or off. A single bit has limited usefulness. Extending the number of bits increases the amount of information. For example, a three-way household lamp can have four states:

Off = 00
On = 01
Brighter = 10
Brightest = 11

The more bits in a unit, the more potential information can be expressed. A digital computer typically works with units of eight bits (or multiples of eight). Eight bits permits 256 different meanings in a given pattern of 1s and 0s. This can communicate all the characters of the number system and upper and lower case letters of the alphabet.

Information in digital systems is transferred by pulse trains as shown in Figure 3 (c).

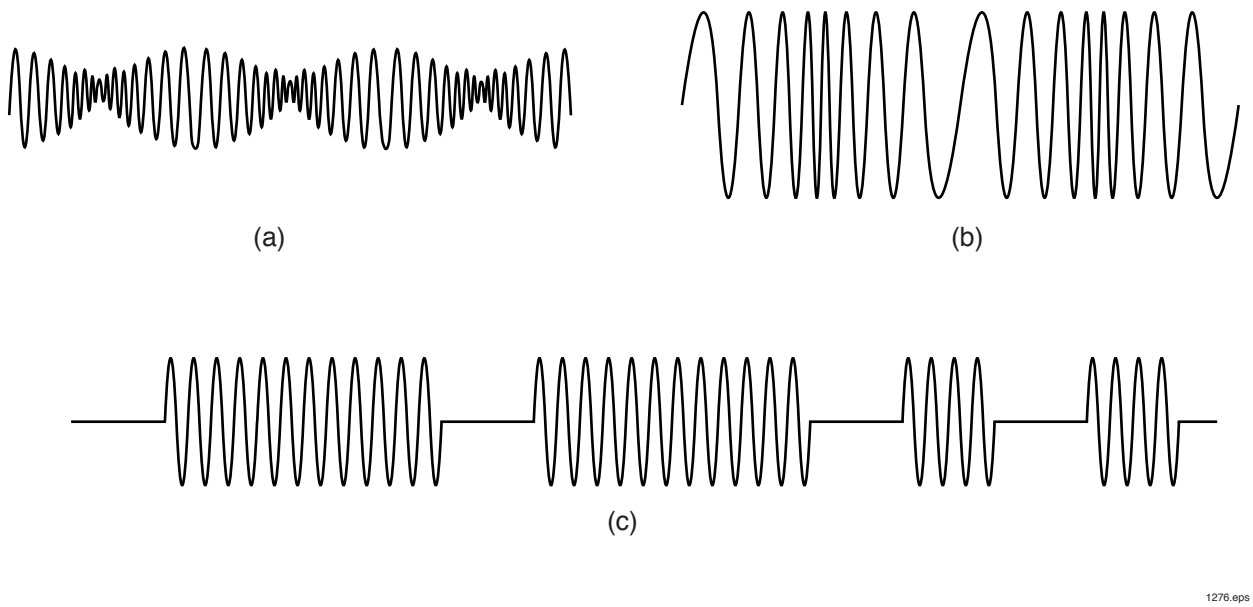

Figure 3. Types of modulation (a) AM, (b) FM, (c) digital modulation.

Advantages

The introductory section of this handbook listed and introduced the advantages of fiber optics. Following is a more detailed description of optical fiber's advantages.

Bandwidth

The information-carrying capacity of a carrier wave increases with the carrier frequency. The carrier wave for a fiber optic signal is light, and is several orders of magnitude higher in frequency than the highest radio wave. Fibers have higher bandwidths, which allows for very high-speed transfer of data. With multiplexing, several channels can be sent over a single fiber. In computers, for instance, the capability of multiplexing paralleled bus lines into serial form for transmission over a fiber can reduce hardware and cabling costs. In telephony, a fiber optic system can carry 672 voice channels one way in a single line. Planned optical multiplexing techniques, such as wavelength division multiplexing, will increase this capacity to thousands of voice channels.

Optical fibers have potential frequency ranges up to about 1 Terahertz, although this range is far from being exploited today. The practical bandwidth of an optical fiber greatly exceeds that of copper cable. Furthermore, the bandwidth of fiber optics has only begun to be utilized, whereas the potential of copper cable is nearing its limits.

Low Loss

Loss determines the distance that information can be sent. As signals travel along a transmission path (copper or fiber), they lose strength. This loss is called attenuation. In a copper cable, attenuation increases with frequency: the higher the frequency of the carrier signal, the greater the loss. In an optical fiber, the attenuation is flat; loss is the same up to very high modulation frequencies.

Electromagnetic Immunity (EMI)

Because fiber is a dielectric, it is not affected by ordinary electromagnetic fields. This offers several advantages over copper cables. Any copper conductor acts as an antenna, either transmitting or receiving. This can cause the quality of data being transmitted or received to be degraded, or in the extreme, lost. EMI control for copper wires commonly involves adding shielded or coaxial cables. The increased shielding raises costs, making fiber system more competitive, and still does not totally alleviate the EMI problem.

Security

It is virtually impossible to "tap" a fiber optic cable surreptitiously, because attempts to reach the light-carrying central portions of the fiber generally affect transmission enough to be detectable. Since fiber does not radiate energy, other eavesdropping techniques fail. Such security reduces data encryption costs.

Weight

A glass fiber optic cable with the same information-carrying capacity as copper cable weighs less than copper cable because the copper requires more lines than the fiber. For example, a typical single-conductor fiber cable weighs 1.2 kg/km. A comparable coaxial cable weighs nine times as much - about 10 kg/km In applications such as ships and aircraft, weight savings allow for more cargo, higher altitude, greater range, or more speed.

Small Size

A fiber optic cable is smaller than its copper equivalent, and a single fiber can often replace several copper conductors. A fiber optic cable containing 144 fibers in a 12 mm diameter has the capacity to carry 24,192 conversations on a single fiber, or nearly two million calls on all the fibers. A comparable coaxial cable would be about nine times larger.

REVIEW OF LIGHT & GEOMETRIC OPTICS

Light travel through an optical fiber depends on the basic principles of optics and light's interaction with matter. The first step in understanding fiber optics is to review light and optics. From a physical standpoint, light can be represented either as electromagnetic waves or as photons. This is the famous "wave-particle duality theory" of modern physics.

Light

Many of light's properties can be explained by thinking of light as a wave within the electromagnetic spectrum. This spectrum is shown in Figure 4. Light is higher in frequency and shorter in wavelength than the more common radio waves. Visible light is from 380 nanometers (nm), far deep violet, to 750 nm, far deep red. Infrared radiation has longer waves than visible light. Most fiber optic systems use infrared light between 750 and 1500 nm. Plastic optical fiber operates best in the 660 nm red wavelength region.

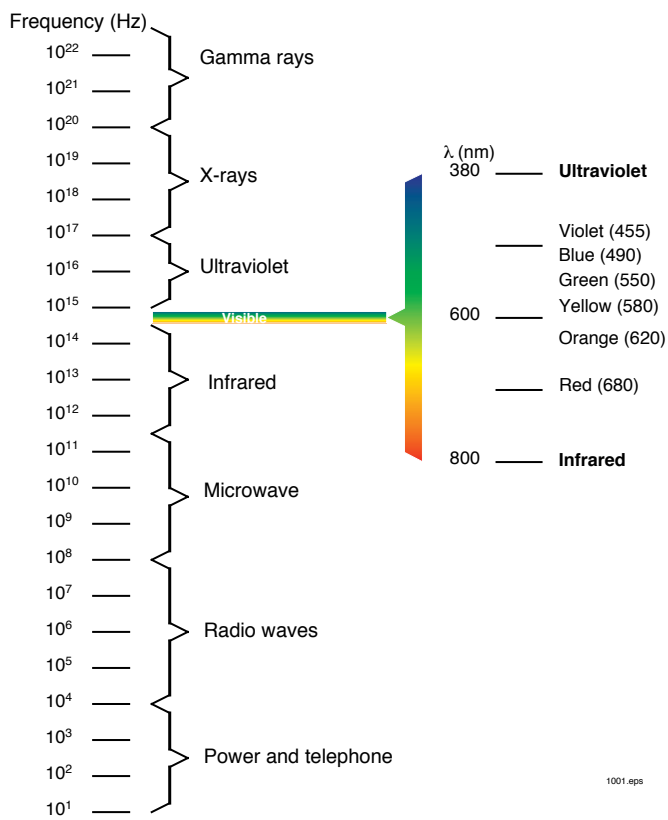

Figure 4. The electromagnetic spectrum.

The relationship between frequency and wavelength of light is defined by Equation 1,

$$! = \frac{c}{f} \qquad \text{Equation 1}$$

where c is the speed of light and f is frequency.

Light also exhibits some particle-like properties. A light particle is called a photon, a discrete unit of energy. The amount of energy contained by a photon depends on its wavelength. Light with short wavelengths has higher energy photons than does light at longer wavelengths. The energy E, in joules, contained in a photon is

$$! = \frac{h \bullet c}{f} \qquad \text{Equation 2}$$

where f is frequency and h is Planck's constant, which is 6.63 X 10^{-34} joule-seconds.

Treating light as both a wave and as a particle aids understanding of fiber optics. It is necessary to switch between the two descriptions to understand the different effects. For example, many properties of optical fiber vary with wavelength, so the wave description is used. In the case of optical detectors, responsivity to light is best explained with the particle theory.

Refractive Index

The most important optical measurement for any transparent material is its refractive index (!). Refractive index is the ratio of the speed of light in a vacuum to the speed of light in the transparent material.

$$! = \frac{c_{vacuum}}{c_{material}} \qquad \text{Equation 3}$$

The speed of light through any material is always slower than in a vacuum, so a material's refractive index is always greater than one. In practice, the refractive index is measured by comparing the speed of light in the material to that in air, rather than in a vacuum. This simplifies the measurements and does not make any practical difference, since the refractive index of air is very close to that of a vacuum. See Table 1.

Table 1. Refractive Indices of Some Common Materials.

Material	Refractive Index
Vacuum	1.0
Air	1.00029
Water	1.33
Fused Quartz	1.46
Glass	1.45 - 1.6
Diamond	2.0
Silicon	3.4
Gallium Arsenide	3.6

Snell's Law

Light travels in straight lines through most optical materials, but something different happens at the point where different materials meet. Light bends as it passes through a surface in which the refractive index changes — for example, passing from air into glass, as shown in Figure 5. The amount of bending depends on the refractive indices of the two materials and the angle of the incident ray striking the transition surface. The angles of incidence and transmission are measured from a line perpendicular to the surface. The mathematical relationship between the incident and transmitted rays is known as Snell's Law.

$$\eta_1 \cdot \sin\theta_1 = \eta_2 \cdot \sin\theta_2 \qquad \text{Equation 4}$$

where η_1 and η_2 are the refractive indices of the initial and secondary mediums, respectively. The angles θ_1 and θ_2 are the angles from normal of the light rays in initial and secondary materials respectively.

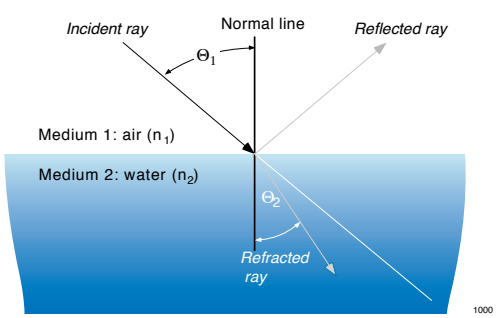

Figure 5. Optical rays at optical interface.

Critical Angle

Snell's law indicates that refraction cannot take place when the angle of incidence becomes too large. (Light traveling from a high index to a low index.) If the angle of incidence exceeds the critical value, where the sine of the angle equals one, light cannot exit the glass. (Recall from trigonometry that the maximum value of the sine of 90 degrees is 1.) All power is reflected when the reflected angle equals or is greater than the angle of incidence. This phenomenon is called total internal reflection. Total internal reflection is what keeps light confined to an optical fiber. The critical angle above which total internal refection occurs can be derived from Snell's Law.

$$\theta_{critical} = arc\ \sin\left(\frac{\eta_2}{\eta_1}\right) \qquad \text{Equation 5}$$

Numerical Aperture

The numerical aperture (NA) of a fiber is related to the critical angle and is the more common way of defining this aspect of a fiber. Critical angles of fibers are not normally specified. Calculation of the numerical aperture of an optical fiber, using the index of refraction of the core and the cladding, can be done with Equation 6.

$$\text{NA} = \left(\eta_{core}^2 - \eta_{cladding}^2\right)^{0.5} \qquad \text{Equation 6}$$

Another term that is sometimes useful is acceptance angle, which can be obtained from the numerical aperture.

$$\theta_{\text{acceptance}} = arc\ \sin\ \text{NA} \qquad \text{Equation 7}$$

Acceptance angle is the half cone angle of the light that can be sent into an optical fiber and be reflected internally. The numerical aperture and acceptance angles of fibers are used for analyzing the collection efficiency of light sources and detectors.

Fresnel Reflections

Even when light passes from one index to another, a small portion is always reflected back into the first material. These reflections are known as Fresnel reflections. The greater the difference in the indices of the two materials, the greater the reflection. The magnitude of the Fresnel reflection at the boundary between any two surfaces is approximately:

$$R = \frac{(\eta_1 - \eta_2)^2}{(\eta_1 + \eta_2)^2} \qquad \text{Equation 8}$$

Light passing from air into an optical fiber and back to air has double this loss.

Construction

The simplest fiber optic cable consists of two concentric layers. The inner portion, the core, carries the light. The outer covering is the cladding. The cladding must have a lower refractive index than the core; therefore, the core and cladding are never exactly the same material.

A cross section of an optical fiber is shown in Figure 6. A light ray, within the acceptance angle, travels down the fiber. Light striking the core-cladding interface at less than the critical angle passes into the cladding. The cladding is usually optically glossy or opaque to dissipate light launched into the cladding. If these rays were allowed to travel down the cladding, the fiber bandwidth would be severely degraded.

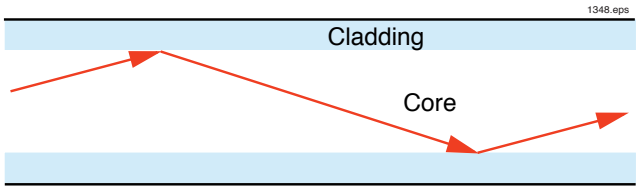

Figure 6. Cross-section of an optical fiber (step-index).

Light travel in an optical fiber depends upon several factors:

- Size of fiber
- Numerical aperture
- Material
- Light source

Modes

The "mode" is an abstract concept originating from mathematicians that lets physicists describe an occurrence in electromagnetic theory. Mode theory can be applied to Maxwell's equations on electromagnetic energy. Maxwell's equations simply state: The boundary conditions of an electromagnetic waveguide determine the characteristics of light's passage. As it turns out for many of the world's conditions, including fiber optic cables, many simultaneous solutions to Maxwell's equations exist. Each solution is different, and each solution is called a mode.

A mode traveling in a fiber cable has a finite path and a characteristic energy defined by Maxwell's equations. Optical fibers can sustain as few as one mode to greater than 100,000. The low-order modes travel near the center of the core and the higher-order modes are those traveling closest to the critical angle.

Fiber Types

In defining fiber types, we will not use physical materials for classification. Fiber types are classified according to the type of mode structure and light passage paths in the fiber. The three fiber types are step-index, graded-index and single-mode. (See "mode" in the Glossary.)

Step-index Fiber

Step-index fiber was the first fiber developed and the simplest of the three types. It has many modes depending on the size and numerical aperture. A step-index fiber is depicted in Figure 6. The diameter of this type of fiber ranges from 50 µm to 13 cm. It suffers from having the lowest bandwidth and greatest loss. The lowest dispersion is about 15 nanoseconds/km. (Lower dispersion is better; this will be covered later.)

Graded-index Fiber

In a step-index optical fiber, the higher-order modes travel farther distance than lower modes as they bounce down the optical fiber. To overcome this lengthening effect, a graded refractive index core was developed. This construction is similar to having many concentric cylinders or tubes of optical material. Figure 7 (a) shows the refractive index profile and light rays traveling in the fiber. The outer layers have a lower refractive index to "speed up" these light rays, compensating for the greater distance traveled. Modal dispersion in this type of fiber is 1 nanosecond/km.

Single-mode Fiber

This fiber construction only allows a single mode to pass efficiently. The core is very small, only 5 to 10 µm in diameter. A single-mode fiber is shown in Figure 7 (b). Single-mode fibers have a potential bandwidth of up to 100 GHz-km.

For a fiber to behave as a single mode, the diameter of the core must be very close to the same size as the wavelength of the optical carrier. The cladding of an optical fiber must be greater than 10 times thicker than the core to satisfy the boundary conditions of Maxwell's equations. A single-mode fiber at 1300 nm may not be single-mode at 820 nm. Most commonly available single-mode fibers are for 1300 and 1500 nm systems.

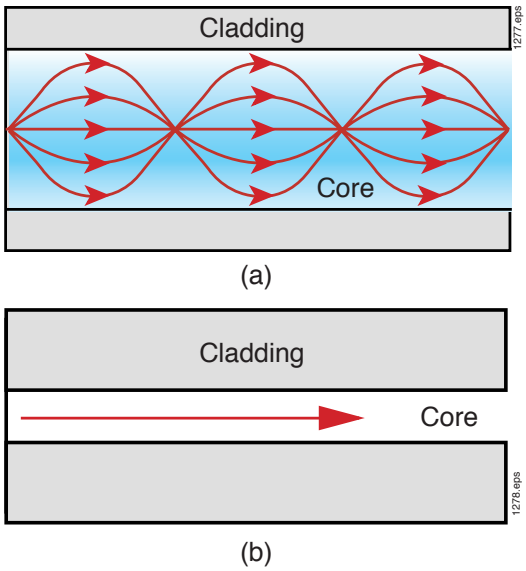

Figure 7. (a) Graded index and (b) single mode fiber.

Attenuation

Light transmission by optical fiber is not 100 percent efficient. Light lost in transmission is called attenuation. Several mechanisms are involved — absorption by materials within the fiber, scattering of light out of the fiber core, and leakage of light out of the core caused by environmental factors. Attenuation depends on trans-mitter wavelength (covered in more detail later).

Attenuation is measured by comparing output power with input power, Equation 9. Attenuation of a fiber is often described in decibels (dB). The decibel is a logarithmic unit, relating the ratio of output power to input power. A fiber's loss, in decibels, is mathematically defined as:

$$10 \bullet Log_{10}\left(\frac{P_o}{P_i}\right) \qquad \text{Equation 9}$$

Thus, if output power is 0.001 of input power, the signal has experienced a 30 dB loss. The minus sign has been dropped for convenience and is implied on all attenuation measurements.

All optical fibers have a characteristic attenuation in decibels per unit length, normally decibels per kilometer. The total attenuation in the fiber, in decibels, equals the characteristic attenuation times the length.

Dispersion

Dispersion is signal distortion resulting from some modes requiring more time to move through the fiber than others. In a digitally-modulated system, this causes the received pulse to be spread out in time. No power is lost due to dispersion, but the peak power has been reduced as shown in Figure 8. Dispersion distorts both analog and digital signals. Dispersion is normally specified in nanoseconds per kilometer.

The dispersion of optical energy falls into two categories: modal dispersion and spectral dispersion.

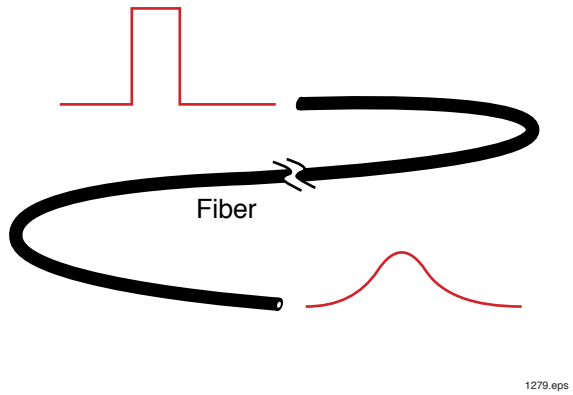

Figure 8. Dispersion in an optical fiber.

Modal Dispersion

Light travels a different path for each mode in a fiber. Each path varies the optical length of the fiber for each mode. In a long cable, the stretching and the summing of all a fiber's modes have a lengthening effect on the optical pulse.

Spectral Dispersion

As discussed previously, refractive index is inversely proportional to the speed that light travels in a medium and this speed varies with wavelength. Therefore, if two rays of different wavelengths are launched simultaneously along the same path, they will arrive at slightly different times. This causes the same effects as modal dispersion, spreading of the optical pulse. Spectral dispersion can be minimized by reducing the spectral width of the optical source. See Table 2, Page 11.

Cabling

Most optical fibers are packaged before use. Otherwise, any damage to the cladding causes degradation of the optical waveguide. Cabling, the outer protection structure for one or more optical fibers, protects the cladding and core from the environment and from mechanical damage or degradation. Fiber optic cables come in a wide variety of configurations. Important considerations in selecting a cable are:

- Tensile strength
- Ruggedness
- Environmental resistance
- Durability
- Flexibility
- Appearance
- Size
- Weight

Evaluation of these considerations depends on the application. No single cable will be suited for all applications. A cross section of an optical cable is shown in Figure 9.

Buffer - A protective layer around the cladding to protect it from damage. It also serves as the load-bearing member for the optical cable.

Strength Member - Material that is added to the cable to increase tensile strength. Common strengthen-ing materials are Kevlar, steel and fiber glass strands or rods.

Jacket - The outermost coating of the cable which provides protection from abrasion, acids, oil, water, etc. The choice of jacket depends upon the type of protection desired. The jacket may contain multiple layers.

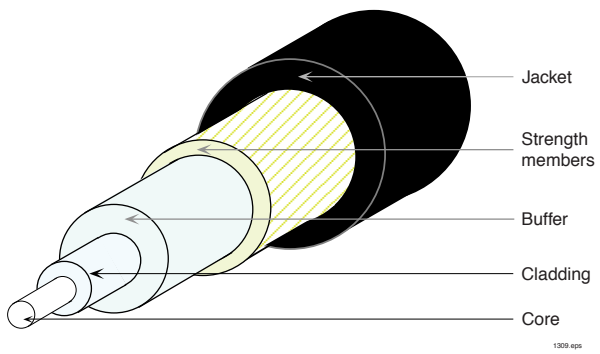

Figure 9. Cross-section of an optical cable.

Typical indoor fiber optic cables include:

- Simplex
- Duplex: Dual channel
- Multifiber
- Plenum-duty
- Undercarpet

Examples of outdoor cable:

- Overhead: Cables strung from poles
- Direct Burial: Cables buried in a trench
- Indirect Burial: Cable located underground inside conduit.
- Submarine: Underwater cable

Fiber Materials

The most common materials for making optical fibers are glass and plastic. Glass has superior optical qualities, but is more expensive per unit volume than plastic. Glass is used for high data rates and long distance transmission. For lower data rates over short distances, plastic fibers are more economical. A compromise option is plastic-clad glass fiber. The fiber core is high quality glass with an inexpensive plastic cladding.

Attenuation of an optical fiber is very dependent on the fiber core material and the wavelength of operation. Attenuation of a glass fiber (a) and of a plastic fiber (b) is shown in Figure 10.

The graphs in Figure 10 show that certain wavelengths are better suited for fiber optic trans-mission than others. Selecting the best wavelength for a fiber also depends on the available light sources and detectors.

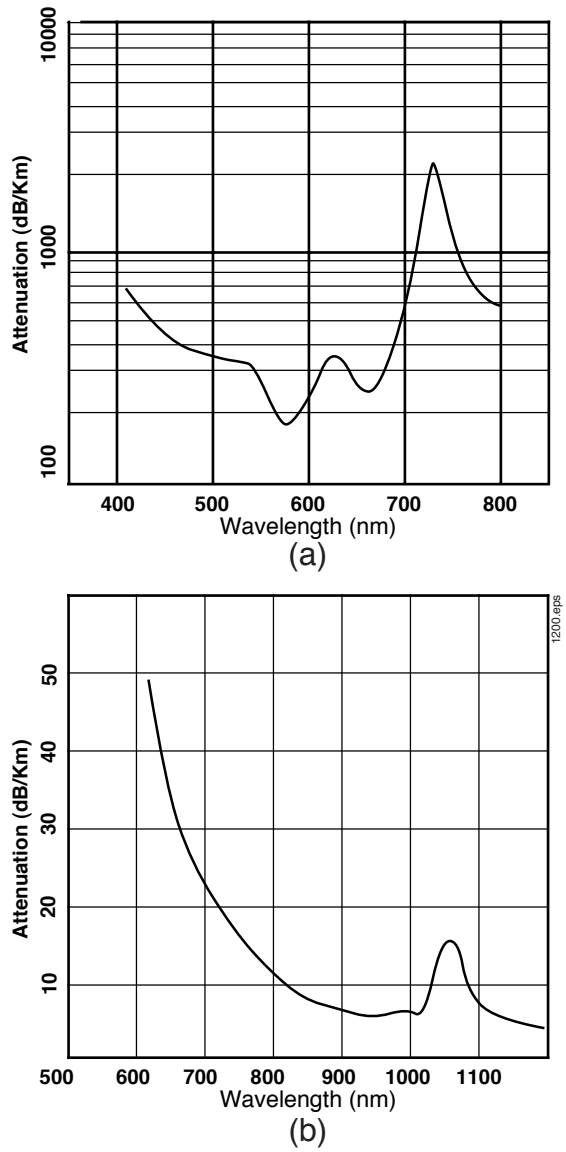

Figure 10. Attenuation of glass fiber (a), plastic fiber (b).

LIGHT SOURCES & THEIR CHARACTERISTICS

This section covers fiber optic light sources, those elements which emit light that can be directed into fiber cables. The rest of the transmitter will be discussed in the next section.

Two types of fiber optic sources supply greater than 95 percent of the communications market: light emitting diodes (LEDs) and laser diodes. (In industrial applications there may be other sources, but these will be covered in the section on industrial applications.) Both sources are made from semiconductor material and technology.

Both of these emitters are created from layers of p- and n-type semiconductor material, creating a junction. Applying a small voltage across the junction causes electrical current to flow, consisting of electrons and holes. Light photons are emitted from the junction when the electrons and holes combine inside the junction.

The best LED or laser for a fiber optic system is determined by several criteria:

- Output power
- Wavelength
- Speed
- Emission pattern
- Lifetime and reliability
- Drive current

Table 2. Typical characteristics of LEDs and lasers.

Characteristics	LED	Laser
Spectral width	20-60 nm	0.5-6 nm
Current	50 mA	150 mA
Output power	5 mW	100 mW
NA	0.4	0.25
Speed	100 MHz	2 GHz
Lifetime	10,000 hrs	50,000 hrs
Cost	$1.00-1500	$100-10 k

LED

LEDs are the simplest of the two sources and the most widely used in fiber optic systems for the following reasons:

- Sturdy
- Inexpensive
- Low input power
- Very long life expectancy

LEDs are made from a variety of materials. Color or emission wavelength depends upon the material. Table 3 shows some common LED materials, with corresponding colors and peak wavelengths.

Simple LEDs emit light in every direction and are constructed to optimize light coming from a particular surface. There are two types of LEDs, or packaging schemes for p-n junctions: surface-emitting LEDs and edge-emitting LEDs.

Surface-emitting LEDs

This is the most common LED packaging type. It is used in most of the visible LEDs and displays. Surface emitters are the easiest and cheapest to make. Figure 11(a) depicts typical surface emitter construction and a typical emission pattern.

Edge-emitting LED

The edge emitter, as shown in Figure 11(b), emits all of its light parallel to the p-n junction. The emission area is a stripe and the emission forms an elliptical beam. Edge-emitters can direct much more light into small fibers than do surface emitters. Because of the high price of fabricating edge-emitting LEDs there are very few being manufactured today. They are as expensive to make as laser diodes and more as compared to the laser diodes manufactured for CD players.

Table 3. Common materials used to make LEDs and laser diodes and their output characteristics.

Material	Color	Wavelength
Gallium phosphide	green	560 nm
Gallium arsenic phosphide	yellow-red	570-700 nm
Gallium aluminum arsenide	near-infrared	800-900 nm
Gallium arsenide	near-infrared	930 nm
Indium gallium arsenic phosphide	near-infrared	1300-1500 nm

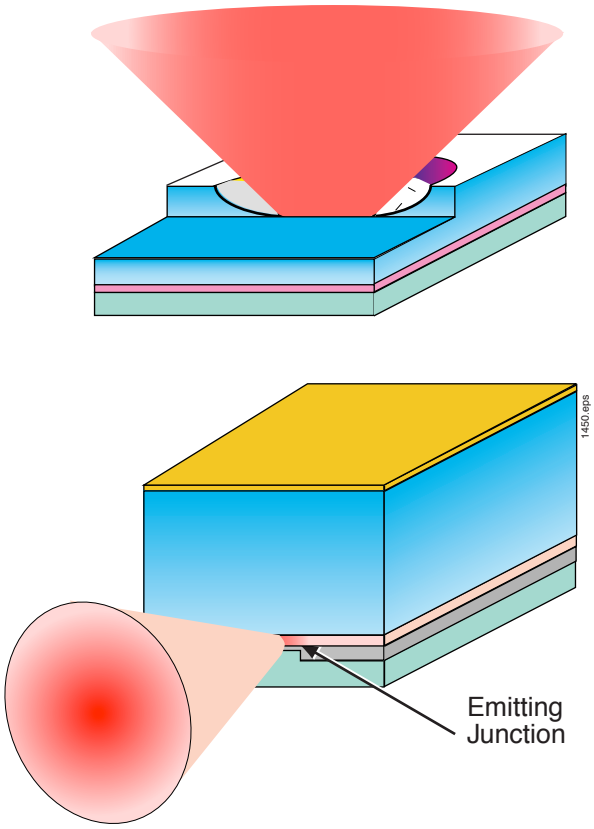

Figure 11. (a) Surface-emitting LED. (b) Edge-emitting LED.

Lasers

Laser is an acronym for light amplification by stimulated emission of radiation. The main difference between an LED and a laser is that a laser has an optical cavity, which is required for lasing. This cavity is called a Fabry-Perot cavity. It is formed by cleaving the opposite ends of the edge-emitting chip to form highly parallel, reflective mirror-like finishes.

At low electrical drive current lasers act as LEDs. As the drive current increases, it reaches a threshold, above which lasing occurs. A laser diode relies on a very high current density to stimulate lasing. At high current densities, many electrons are in the excited state. As in LEDs, holes and electrons combine inside the laser, creating photons, which are confined to the optical cavity. Photons can travel only along the length of the optical cavity, and as they travel they collide with other electrons, generating new photons. These photons are clones of the first photons; they travel the same direction, have the same phase and wavelength. The first light photon amplified itself by stimulating an electron to emit another photon.

Both ends of the laser diode can be 100 percent reflective or there would be no optical output. Usually, one end has a partially reflecting facet to allow some optical power to escape to be used in fiber optic systems.

The stimulated emission process is very fast; laser diodes have been modulated at up to 16 gigabits per second.

Producing a laser diode is much more difficult than the simple description just given. Many material properties must all simultaneously occur. The very complex fabrication process causes laser diodes to be higher priced than surface-emitting LEDs.

Power

Both LEDs and lasers have voltage versus current curves similar to those of regular silicon diodes. The typical forward voltage drop across LEDs and laser diodes, made from Gallium Arsenid, is 1.7 volts.

In general, the output power of sources decreases in the following order: laser diodes, edge-emitting LEDs, surface emitting LEDs. Figure 12 shows some curves of relative output power versus input current for LEDs and lasers.

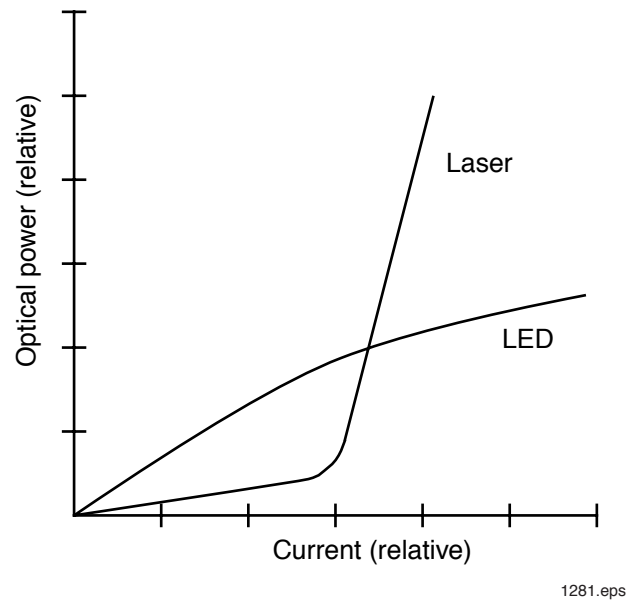

Figure 12. Output optical power versus current for LEDs and laser diodes.

Wavelength

Because optical fibers are sensitive to wavelength, the spectral (optical) frequency of the fiber optic source is important. Lasers and LEDs do not emit a single wavelength; they emit a range of wavelengths. The spectral width is the optical bandwidth at which the intensity of emission falls to 50 percent of the peak —sometimes known as full width half maximum [FWHM]. The spectral width of a laser is 0.5 to 6 nm; the width of LEDs is several times wider, typically between 20 and 60 nm.

Speed

A light source must turn on and off fast enough to meet the bandwidth requirements of the fiber optic system. Source speeds are specified by rise and fall times. Laser diodes have rise time less than 1 nanosecond, whereas LEDs have slower rise times, typically 5 nanoseconds or greater. A rough approximation of bandwidth of a device, given the rise time, is

$$B_w = \frac{0.35}{t_r} \qquad \text{Equation 10}$$

where B_w is bandwidth in Hz and t_r is rise time in seconds.

Lifetime

The expected operating lifetime of a source can run into thousands of hours. Over time, the output power decreases due to increasing internal defects. The specified lifetime of a source is the time for the output power to decrease to 50 percent of initial value. LEDs have a much longer lifetime than lasers. The conditions under which lasing occurs cause greater thermal stress, promoting growth of internal defects in the device, decreasing longevity.

Usage

Although a laser provides better optical performance than an LED, it is also more expensive, less reliable and harder to use. Lasers often require more complex electrical driving circuits. For example, the output power of a laser changes significantly with temperature. Therefore, to maintain proper output levels and prevent damage to the laser, special circuitry is needed to detect changes in temperature or optical output and adjust the electrical drive current according to temperature or output power.

Safety

Light from lasers or other light sources can cause eye damage just as directly looking at the sun can. Particularly with fiber optics systems, the light is infrared and not visible to the eye. Infrared radiation can be very dangerous because the normal human blink response will not protect the eye, nor can it be visibly seen.

Generally, light from LEDs is not intense enough to cause eye damage, but the emission from laser diodes can be harmful. Users should be especially conscious of collimated light beams from LEDs or lasers.

Because most fiber optic communications systems have very low optical power, eye safety is not usually a problem, but do not take it for granted. If you do not know, ask! The precautions are simple:

- **Do not look directly into an LED or laser diode**
- **Avoid all eye contact with all collimated beams**
- **Before working with fiber optics become familiar with pertinent safety standards**

For more information about safety, contact the Laser Society of America or OSHA. See section titled *References* for safety information.

TRANSMITTER COMPONENTS

The light source is the most important component of a transmitter, but it is not sufficient by itself. A housing is required to mount and protect the light source and to interface with the electronic signal source and transmitting optical fiber. Internal components may be necessary to optimize light coupling into the optical fiber. Electrical drive circuitry is needed and output monitoring may be crucial for sophisticated laser diodes.

Practical boundaries between transmitters and light sources can be vague. Simple LED sources can be mounted in a case with optical and electronic connections, with little or no drive circuitry. On the other hand, a high-performance laser may be packaged as a transmitter in a case that also houses an output monitor and thermoelectric cooler.

Elements of a Transmitter

The basic elements commonly found in transmitters and shown in Figure 13 are:

- Housing
- Electronic interface
- Electronic preprocessing
- Drive circuits
- Light sources
- Optical interface
- Temperature sensing and control
- Optical monitor

Housing

The simplest housing for a fiber optic transmitter is an adequately sized box that can be conveniently mounted with screws or other means to a printed wiring board or other electrical interface. Some transmitters are built inside a mechanical box, with only electrical and optical connections exposed.

Electronic Interface

Electronic interfaces can be wires, pins, or standard electrical connections. Transmitters containing a LED may only have two simple electrical connections. Others may be more complex, requiring electrical power, feedback interfaces resulting in circuits and up to 16 or more interconnects.

Drive Circuits

The type of drive circuit depends upon the application requirements, data format and light source. LEDs are best driven by a current source. (Most electronic signals are voltages and must be converted to current.) Some LEDs work better with special drive circuitry to tailor the electric current input. For example, the proper drive waveform can effectively reduce the rise time of an inexpensive LED and allow its use at higher-than-specified bandwidths.

Semiconductor lasers are generally pre-biased at a current level near lasing threshold.

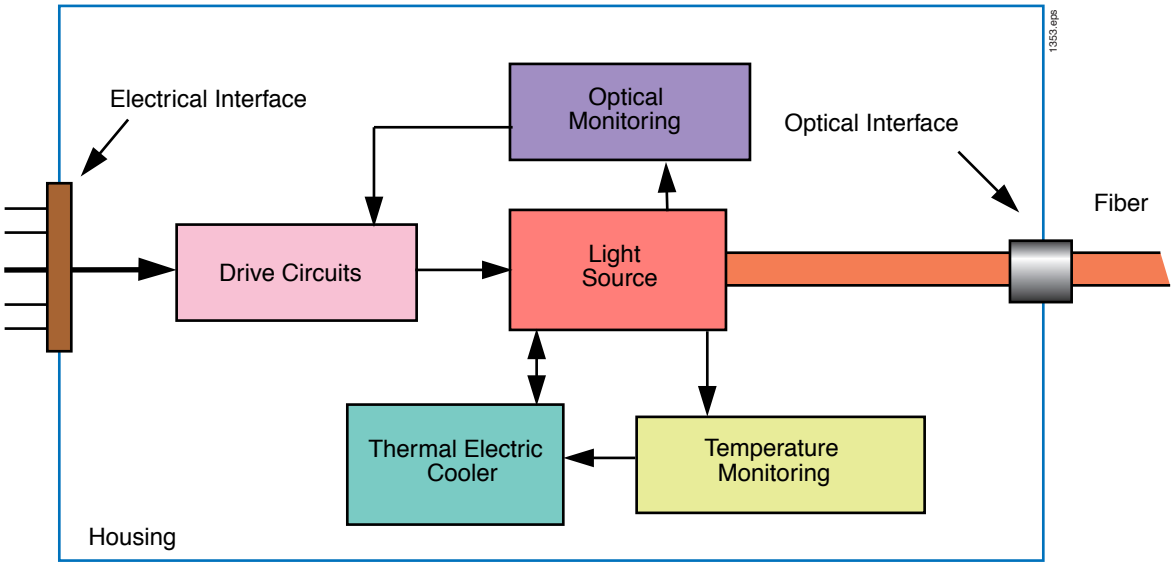

Figure 13. Block diagram of elements commonly found in a fiber optic transmitter.

Light Source

Fiber optic light sources are either LEDs or laser diodes. We discussed these two components in the previous section.

Optical Interface

The two forms of optical interfaces are the fiber optic connector as shown in Figure 14, and a short fiber optic pigtail coupled to the light source and brought outside the housing. The pigtail can be spliced or connected to an external fiber.

Temperature Sensing and Control

These circuits are primarily found in transmitters with laser diodes, because their output is very temperature-dependent. A temperature sensing element senses the device temperature, compares it to a reference, and then adapts the electric heat pump to control the laser diode temperature. (The most common heat pump is the thermal electric [TE] cooler.) Stabilizing the temperature of laser diodes has the additional benefit of increasing their reliability and lifetime.

Optical Monitor

Some transmitters include optical output stabilization circuits. Such circuits sample a small amount of optical energy with a photodetector and convert it to an electrical signal. The signal is then used to adjust input drive current, stabilizing output power.

Requirements

No single fiber optic transmitter will fulfill all the needs of the many fiber optic designs. There are just too many options that must be considered when making a design. Following is a list of important design criteria to consider when selecting a fiber optic transmitter:

- Modulation type
- Speed
- Output power
- Optical interface
- Electronic interface
- Housing
- Cost

In most cases, fiber optic system engineers do not design their own transmitters, but rather use completed assemblies. For information on Industrial Fiber Optics transmitter components, please see our Web site at

www.i-fiberoptics.com

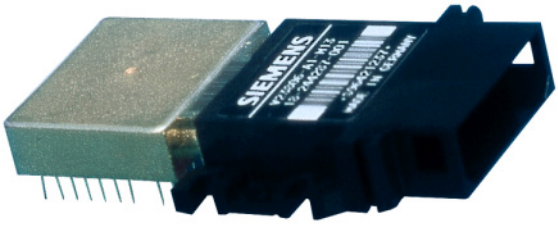

Figure 14. Fiber optic FDDI transceiver.

DETECTORS FOR FIBER OPTIC RECEIVERS

In a receiver, the detector is comparable to the light source in the transmitter. The detector performs the reciprocal function of the source, converting optical energy to electrical current. This section will cover the types of semi-conductor photodetectors.

Fiber optic detectors are fabricated from semiconductor materials similar to those found in LEDs and lasers.

Table 4. Photodetector materials and active regions.

Material	Wavelength (nm)
Silicon	400 - 1050
Germanium	600 - 1600
Gallium arsenide	800 - 1000
Indium gallium arsenide	1000 - 1700
Indium arsenic phosphide	1100 - 1600

A circuit using a semiconductor photodetector is shown in Figure 15. The diode is reverse biased; little or no current flows in the absence of light. When light photons strike the detector, they create hole/electron pairs, causing current flow. The number of electron/hole pairs (current) is directly proportional to the amount of light incident upon the detector. This type of photodetector is called a photoconductive detector.

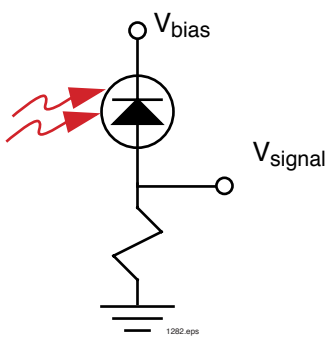

Figure 15. Circuit using an optical photodetector.

Types

The characteristics of four types of photoconductive photodetectors are listed in Table 5. The phototransistor and photodarlington have little use in most fiber optic systems due to their slow rise times. Photodiodes and avalanche photodiodes are the primary detectors for fiber optics.

Table 5. Characteristics of fiber optic detectors.

Device	Responsivity	Rise time
Phototransistor	18 A/W	2.5 us
Photodarlington	500 A/W	40 us
PIN photodiode	0.6 A/W	1 ns
Avalanche photodiode	60 A/W	1 ns

Photodiode

There are several types of photodiodes, also. The one most useful for fiber optics is the PIN photodiode. The name of the photodiode comes from the layering — positive, intrinsic, negative — PIN. See the cross-section shown in Figure 16.

The PIN photodiode has higher efficiency and a faster rise time than other photodiodes. In a PIN photodiode, one photon creates one hole/electron pair.

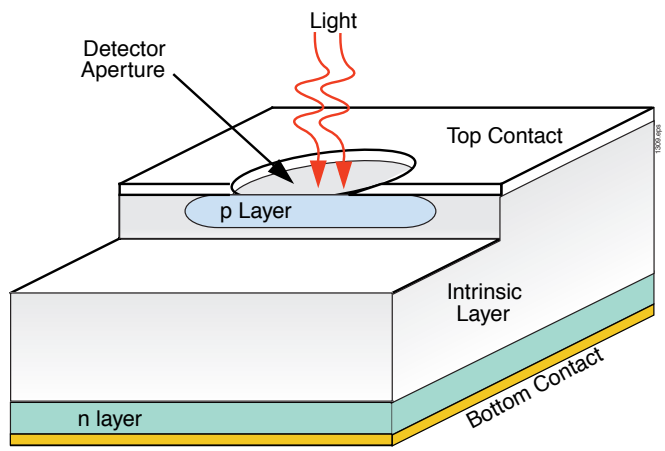

Figure 16. Cross-section of a PIN photodiode.

Avalanche Photodiode (APD)

The avalanche photodiode is similar to the laser diode. In a laser, a few primary carriers result in many emitted photons. In an avalanche photodiode, a few photons produce many carriers.

When an avalanche photodetector absorbs a photon, it creates a hole/electron pair in the intrinsic region. The APD is reversed biased, causing the holes and electrons to move in the electric field. In an avalanche photodiode this electric field is much stronger than in a PIN diode, due to higher bias voltage (typically 100 – 400 volts). The holes/electron pairs accelerate while traveling in this strong electric field. These pairs collide with electrons/holes, generating another set of carriers, i.e., avalanching.

The avalanche process amplifies the number of carriers generated from a single photon. Typical magnifications are 10 to 100.

Avalanche photodiodes are used in fiber optic systems because the system noise level is limited by the interface electronics which follow. The avalanche photodiode provides pre-electronics gain.

Disadvantages of using avalanche photodiodes:

- Gain variation with temperature
- High voltage power supply required
- Power dissipation
- Higher price

Responsivity

The responsivity of a detector is a measure of its efficiency. A good detector has an efficiency between 80 and 85 percent. A plot of silicon PIN photodiode responsivity versus wavelength is shown in Figure 17. The shape of the response is typical and consistent with solid state theory. It is beyond the depth of this course to discuss this, but suffice to say that a 100 percent efficient detector does not generate 1 Amp per watt. The typical responsivity of a silicon PIN diode is .6 A/W.

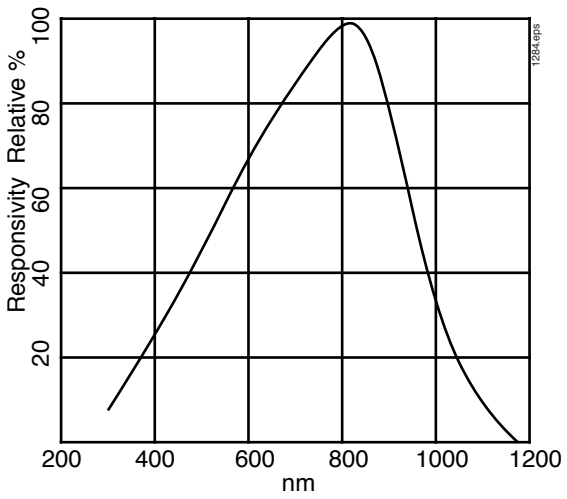

Figure 17. Responsivity of a silicon photodiode versus wavelength.

The shape of the curve shown in figure 17 is dependant upon the detector material. Above a certain wavelength, light photons will not contain enough energy to create a hole/electron pair (see Equation 2). This explains the sharp roll-off to the right of the peak. For the curve left of the peak, remember that if the optical power remains constant, the number of photons (per watt of energy) decreases as the wavelength gets shorter. In a detector each photon creates one hole/electron pair, thus the responsivity decreases with wavelength with constant energy. The remainder of the energy is converted to heat. Other effects also occur below 500 nm, but this is outside fiber optic normal operating regions.

Dark Current

Dark current is the current flowing through a detector in the absence of any light when in an operational circuit. This value is normally specified on the manufacturer's device data sheets as a worst-case condition at a given temperature. The dark current in silicon PIN photodiodes or APDs doubles every 10° C.

Rise time

A fiber optic system's bandwidth is very dependent on the photodetector bandwidth or rise time. Equation 10 applies to detectors as well. Rise time is furnished on the manufacturer's data sheets. Rise times can be dependent on the bias voltage applied to the photodetector. The rise and fall times are very comparable in PIN photodetectors and avalanche photodiodes.

Bias Voltage

Both photodiodes and avalanche photodiodes are reverse biased. Typical bias voltage for photodiodes is 5 to 100 volts. Photodiodes operating with a low bias voltage will have more internal capacitance which slows down rise and fall times.

Avalanche photodiodes require a much higher voltage, typically 100 to 400 volts. The bias voltage of avalanche photodiodes determines the responsivity of the device, as shown in Figure 18.

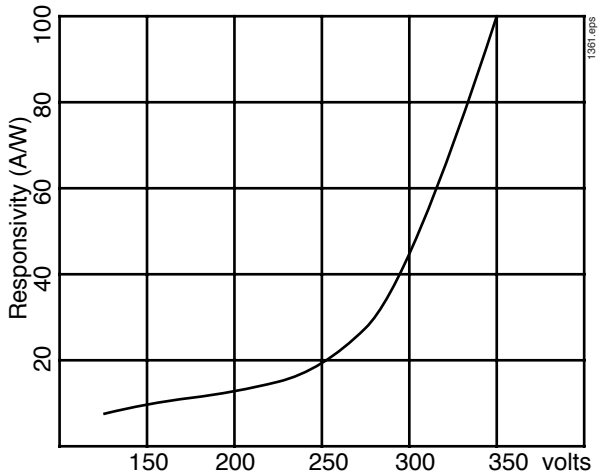

Figure 18. Responsivity versus voltage for an APD.

ELEMENTS OF FIBER OPTIC RECEIVERS

Preamplifier

The receiver is as essential an element of any fiber optic system as the fiber or light source. The receiver converts the optical signal transmitted through the optical fiber to an electrical form. Again, the boundary between receivers and detectors is variable, depending on the system requirements.

Receiver Elements

Fiber optic receivers come in many varieties, from simple packaged photodetectors to sophisticated systems for high speed transmission. The description of a receiver is a little more complicated than the transmitter because there are two types of receivers, analog and digital. The basic elements of all receivers are:

- Housing
- Electronic interface
- Optical interface
- Detector
- Low-noise preamplifier
- Main amplifier
- Signal processor

The information pertaining to the housing, electronic interface, and optical interface covered in the section on transmitters applies equally to receivers.

The preamplifier sets the two most important performance levels in a fiber optic system: minimal detectable signal and electrical bandwidth. At the preamplifier, the signal is the weakest and the most susceptible to extraneous sources. Typical input-current levels to preamplifier are 0.1- 100 µA.

The transfer function of a fiber optic preamplifier has the dimensions of volts per Amp. (Most electronic amplifiers have transfer functions of volts/volt.) This unusual dimension of these preamplifiers gives them an alternate name, transimpedance amplifiers.

Main Amplifier

The main amplifier further amplifies the transimpedance amplifier signals to higher levels. Typical values would be 0.7 to 3.4 volts in a digital TTL system. In an analog system, the main amplifier could be a power amplifier for driving a 50 ohm load

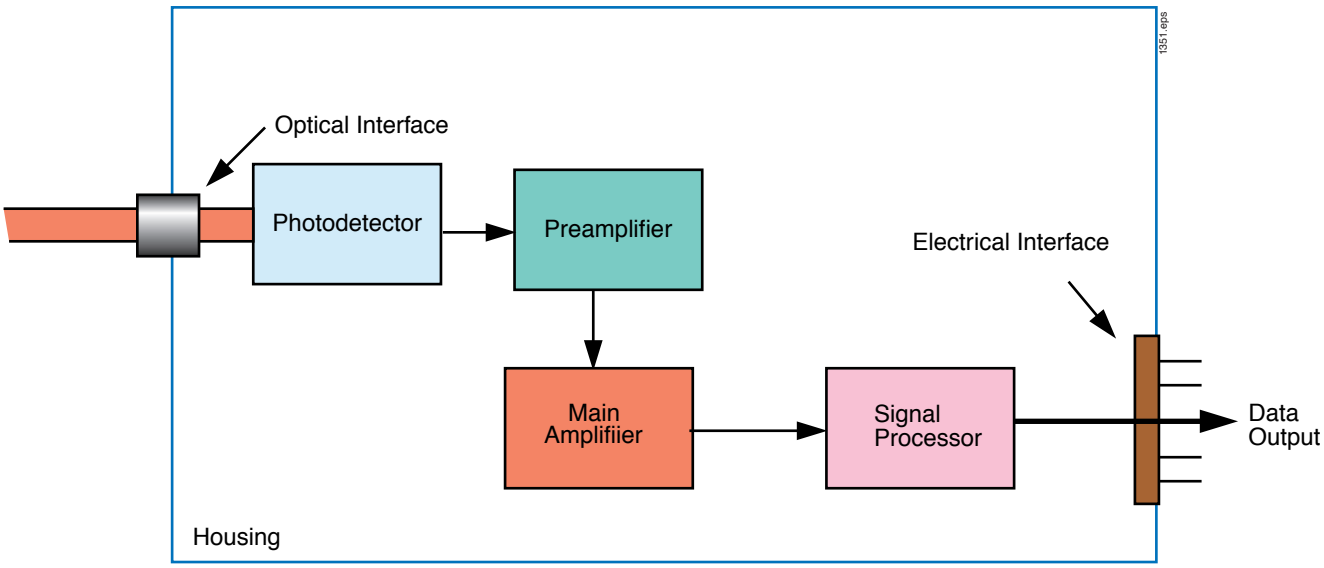

Figure 19. Typical elements of a fiber optic receiver.

Signal Processor

The detector, preamplifier, and main amplifier are the same for both analog and digital receivers, but the signal processors are different. See Figure 20.

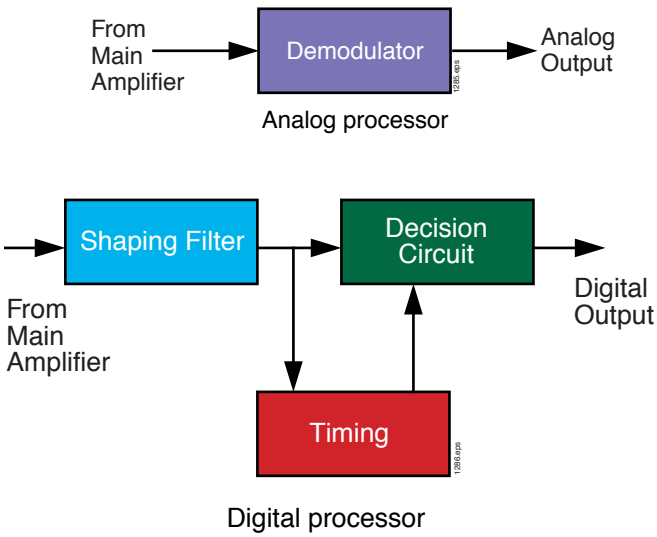

Figure 20. Analog and digital fiber optic receiver signal processors.

Requirements

Fiber optic receiver requirements are so different that a single device cannot fit every need. Besides selecting between analog and digital receivers, there are many other options. Following is a list of the more important features in a receiver:

- Modulation
- Bandwidth
- Noise
- Dynamic range
- Optical interface
- Electronic interface
- Housing
- Cost

Fiber optic engineers, in most cases, do not design their own receivers, but rather use completed assemblies. Details of receiver design will be left to more advanced classes, but a brief discussion of the two most critical receiver parameters follows.

Noise in Fiber Optic Receivers

Every component in a fiber optic receiver generates electrical noise. This noise has a Gaussian distribution. The amplitude depends on the receiver bandwidth and associated components, but the detector and preamplifier are the major sources.

The noise current generated in a photodiode is called shot noise. It can be calculated by Equation 11,

$$i_s^2 = 2\ e\ I\ B \qquad \text{Equation 11}$$

in which e is the charge of an electron, 1.6 X 10^{-19} coulombs, B is system electrical bandwidth in Hz, and I is the dc current flowing through photodiode in amps.

Shot noise generation is due to the statistical nature of electron flow across the p-n junction.

Thermal noise or Johnson noise is caused by noise generated in resistors and electronics, and can be calculated from Equation 12.

$$i_{th}^2 = \frac{4\ K\ T B}{Req} \qquad \text{Equation 12}$$

K is Boltzman's Constant (1.38 E-23 joules/° K), T is the absolute temperature (°Kelvin) and Req is the equivalent resistance of the transimpedance amplifier.

The total noise current of a photodiode and preamplifier can be summed up by Equation 13.

$$i_{\text{noise}}^2 = i_{\text{shot}}^2 + i_{th}^2 \qquad \text{Equation 13}$$

Receiver Bandwidth

The electrical bandwidth of most fiber optic receivers is set by the preamplifier. Generally, photodiodes and avalanche photodiodes with wide bandwidths are easier to find than wide bandwidth, low-noise preamplifiers.

The fiber optic receiver in Figure 19 has a series of elements that each can reduce system bandwidth or rise time. Calculation of overall system rise time can be done with Equation 14. Bandwidth can be computed with Equation 10.

Equation 14

$$t_r(system) = \left(t_r^2(transmitter) + t_r^2(\text{det}ector) + t_r^2(preamp) + \ldots\right)^{0.5}$$

PASSIVE OPTICAL INTERCONNECTIONS

Interconnecting the various components of a fiber optic system is a vital part of system performance. This section discusses the mechanics and requirements for fiber optic connections and distribution. The three most important interconnects involve connectors, splices and couplers.

The losses in a fiber optic interconnect can be separated into two categories.

Intrinsic, or fiber-related, losses caused by variations in the fiber itself, such as numerical aperture mismatch, concentricity, ellipticity and core/cladding mismatches.

Extrinsic, or interface-related, factors contributed by the interface itself. The main causes of these losses are lateral displacement, end separation, angular misalignment and surface roughness.

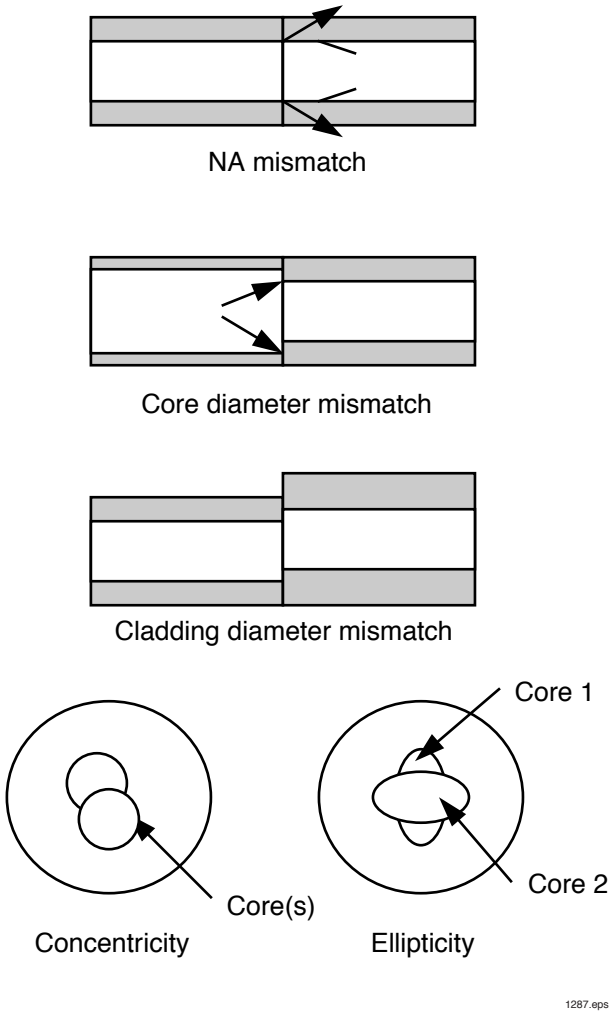

Figure 21. Intrinsic fiber optic losses.

Connectors

The fiber optic connector is a non-permanent disconnectable device used to connect a fiber to a source, detector, or another fiber. It is designed to be easily connected and disconnected repeatedly. Listed below are some of the desirable features in a connector:

- Low loss
- Easy installation
- Repeatability (low variations in loss after disconnection)
- Consistency (between connectors)
- Economical

It is very difficult to design a connector to meet every requirement. A low-loss connector may be more expensive, take longer to install, or require high-priced tooling than a higher-loss connector.

The many different kinds of connectors include:

- SMA
- ST
- Bi-conic
- LC

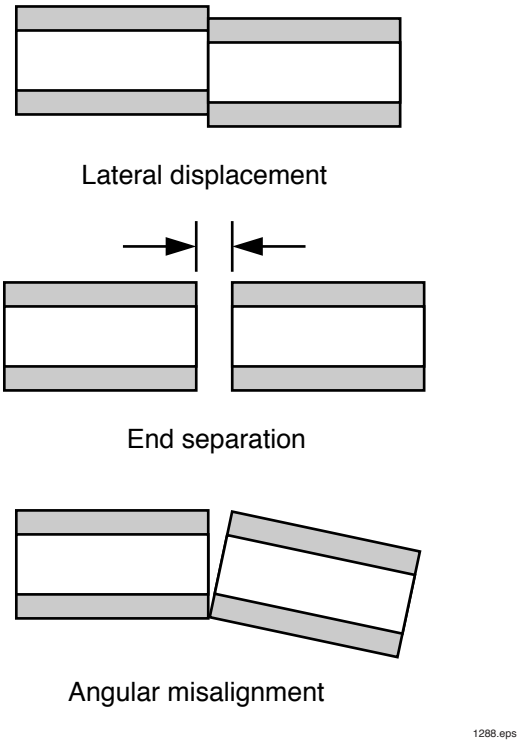

Figure 22. Extrinsic fiber optic losses.

The SMA fiber optic connector is the oldest type of connector, evolving from the SMA electrical interface. The ST, Bi-conic and LC are connectors recently designed specifically for fiber cable using small core fiber, having low loss and meeting environmental considerations.

The installation of a fiber optic connector is similar to that of electrical connectors, but it does require more care, special tools and little more time. The steps in making a fiber optic connection are outlined below:

- Open cable
- Remove jacketing and buffer layers to expose fiber
- Insert fiber cable into connector
- Attach connector to fiber with crimp or epoxy
- Scripe fiber
- Polish or smooth the fiber end
- Inspect fiber ends with microscope

Splices

Unlike connectors, splices are a permanent connection between two fibers. Table 6 presents a comparison of connectors and splices.

The main concerns in a fiber optic splice are:

- Losses in splice
- Physical durability
- Ease of making splice

The losses in a fiber optic splice are identical to those in a connector — intrinsic and extrinsic. However, the methods used to make fiber optic splices produce tighter tolerances, and therefore lower attenuation. Some sources of loss are reduced; others are eliminated.

Because most fiber optic splices are made in the field, the ease with which splices can be made is very important. This has led to development of very specialized fiber splices and equipment.

A splice is made by either fusing (melting), gluing, or mechanically holding two fibers together. Unlike wire splices, a carefully made fusion splice can withstand roughly the same stress as an unspliced fiber. Wire splices will nearly always fail in the joint.

Fusion Splices

The fusion splice, the most common fiber splice, is formed by heating two ends of fiber and welding them together.

A splice begins with cleaving the ends of both fibers. (A fiber cleave is made by scribing or nicking the fiber and putting it under tension by pulling or bending. This causes the fiber to break along the crystalline structure. Ideal cleaves are perfect — no discontinuities.) The ends are cleaned and prepared with a preform electrical arc, then the fibers are aligned with micropositioners and a microscope or an automatic alignment processor. A final fusion completes the splice process. The electrical arc raises the fiber temperature to 2000° C, melting the glass. Time duration and energy in the arcs can be controlled, which allows optimal splices for many different types of fibers.

Mechanical Splice

Mechanical splices join two fiber ends by clamping them within a structure or by gluing them together. Because tolerances in mechanical splices are looser than fusion splicing, this approach is used more often with multimode than single-mode fiber. Mechanical splices are easy to perform and do not require expensive splicing equipment. Losses are generally higher in mechanical splices than in fusion splices.

Table 6. Comparison of fiber optic connectors and splices.

Connectors	Splices
Non-permanent	Permanent
Factory installable on cables	Easier to get low loss in field
Easy reconfiguration	Lower attenuation
Simple to use	Spliced fibers can fit inside conduit
Field installable	Some are hermetically sealed
Less expensive per interconnect	Stronger junction

Couplers

The term "coupler" has a special meaning in fiber optics. A fiber optic coupler connects three or more fibers. As such, it is distinct from connectors and splices, which join only two entities. In fact, splices or connectors link fibers to couplers. The coupler is far more important in fiber optics than in electrical signal transmission because the way in which optical fibers transmit light makes it a problem to connect more than two points. Fiber optic splitters, or couplers, were developed to solve that problem.

Important issues in the selection of a coupler include:

- Number of input and output ports
- Type of fiber (single or multimode)
- Sensitivity to direction
- Wavelength selectivity
- Cost

The two types of passive couplers are the "star" and the "T", shown in Figure 23. The T coupler has three ports, as the name would suggest. The star coupler can have multiple input and output ports, and the number of input and output fibers does not have to be the same.

For fiber optic users, couplers are "black boxes". Normally these are purchased, like transmitters and receivers. The use of couplers is quite simple and only a couple of terms need to be defined.

Excess loss - The optical loss inside the coupler, determined by dividing the sum of all the output power by the input power. Normally expressed in dBs

Insertion loss - The reduction of optical power occurring within an optical coupler due to light transmitted from any input to an output fiber in a coupler. It is usually specified as a maximum value and in dBs. (This term can be used to determine quickly the minimum optical power at any fiber output if the input power is known.)

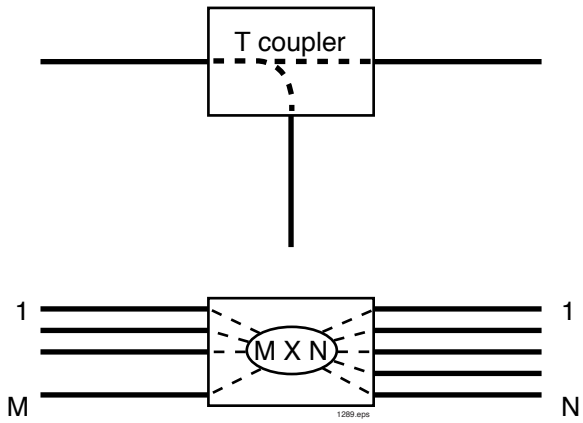

Figure 23. The "T" and "star" fiber optic couplers.

We have looked at the main components of a fiber optic link including cables, light sources and transmitters, optical detectors and receivers, and connectors and couplers. This section will bring all of that information together to show you how to analyze and specify a fiber optic link. The two main considerations for all fiber optic systems are the optical power and system bandwidth budgets.

Design Criteria

The first step in planning a fiber optic system is to define the applications requirements. The main issues are: *How far? How fast?* The answers to these basic questions determine the system hardware to a large extent.

With the distance and data rate established, secondary features can now be considered, such as those shown below. Those features with asterisks after them should be furnished as part of the system specification or requirement.

Type of fiber: single or multimode
Fiber numerical aperture
Fiber core diameter
Operating wavelength
Fiber attenuation
Fiber dispersion
Source type: LED or laser
Transmitter power
Detector type: PIN diode or APD
Receiver sensitivity
Bandwidth of receiver and transmitter
Signal-to-noise ratios / bit error rate
Connector losses and number
Splice losses and number
Environmental concerns *
Mechanical concerns *
Reliability *
Cost *

Many of the variables above are interrelated, e.g., transmitter power depends on the source. Most systems will require a compromise between several variables — and a highly reliable system may not be inexpensive.

S/N Ratio and Bit Error Rate

Fiber optic transmission is very similar to electrical data transmission. The real world clutters up the data with randomly generated noise and attenuates the signal over distance. The data "quality" is usually referred to as

Signal-to-Noise ratio (S/N) for analog signals, and Bit Error Rate (BER) for digital signals.

Signal-to-noise is the ratio of signal power to noise power in the receiver. Signal-to-noise ratio is commonly expressed in dBs.

$$\frac{S}{N} = 10 \bullet Log\left(\frac{i^2_{signal}}{i^2_{noise}}\right) \qquad \text{Equation 15}$$

where i_{signal} is the signal input to the amplifier and i_{noise} the noise current in the receiver.

Bit error rate is a function of signal-to-noise ratio, data format, and error-correcting schemes. Figure 24 is a plot of BER versus signal-to-noise ratios for a simple non-error-correcting data transmission. A typical BER for telecommunications is 10^{-9}, or one error in 1 billion data points. Computer data interfaces typically operate with BERs of 10^{-12}.

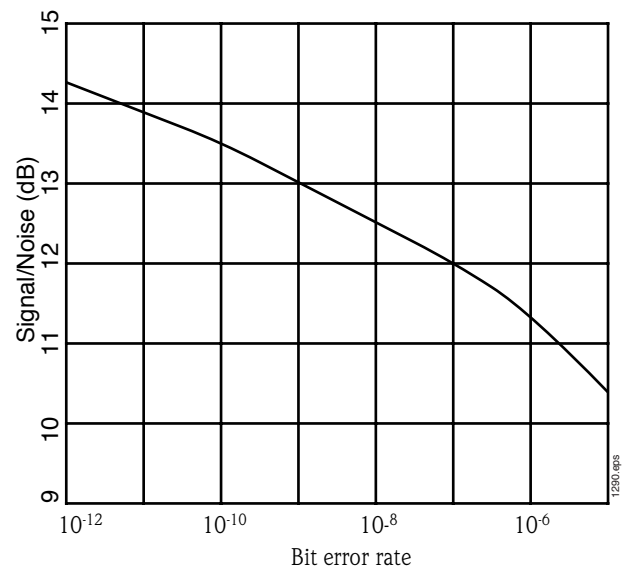

Figure 24. BER versus signal-to-noise ratio.

Signal-to-noise ratio or BER is usually specified by the communications system or engineer. This parameter must be specified or agreed on before system design can begin.

System Margin

One quantity that should always be entered into a fiber optic system is safety factor, or design margin for the system designer. This allows for uncertainties in counting the losses and for system degradations, such as output of light sources decreasing over time, a spliced broken cable, increased attenuation due to moisture, or receiver becoming less sensitive. Typical margins are 1 to 4 dB.

Analyzing the System

Drawing a diagram showing all interconnections and interfaces is the first step in designing and analyzing a fiber optic system. See Figure 25. Distances and bandwidths can be included, but are not required.

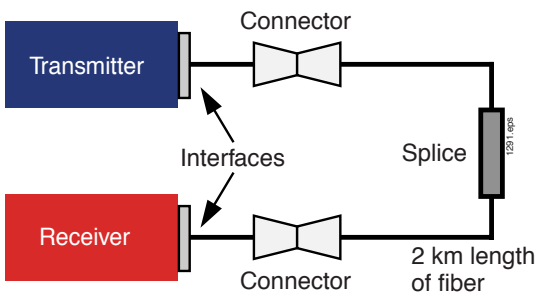

Figure 25. System design diagram.

Component Selection

The next step is to choose the fiber type and the source. Table 7 will help select the fiber. For long distances or high bandwidths, a laser diode must be used. For moderate bandwidths and short distances, an LED can be used. For conditions in between, the particular system lengths need to be detailed.

Loop loss budgets require the electrical S/N ratio to be divided by 2. From the analysis above, a receiver with an NEP of 4 µwatts must be used. This is typical for a detector with a PIN diode. The selection of the type of detector has now been made.

The next step is to locate the parts that have been identified so far: transmitter, receiver, and cable. For the inexperienced designer, the Fiberoptic Product News "Buying Guide" is an excellent source of information about vendors and all fiber optic components. See *References.*

A selection of fiber optic cable must now be made, as this will drive the remainder of the system design. The environmental and installation procedures will determine the type of cable.

The choice of connector and splices will be made based on the fiber type. The Buying Guide is a valuable resource here also. See *References.*

Table 7. Guide to fiber selection.

Fiber type	Step index	Graded index	Single mode
Bandwidth	Moderate	High	Very high
Distance	Short to medium	Medium to long	Very long

Remember, an LED is always the cheapest and the easiest to use. An alternative to using a laser diode transmitter is to use a more sensitive receiver, one with an APD.

Check to see if the fiber choice and source will meet the system bandwidth requirements from the standpoint of dispersion characteristics of fiber and spectral width of source.

$$B_{modal} > B_{system} \qquad \text{Equation 16}$$

On the "system design diagram", estimate loss at all splices and connectors. (A decision on connectors has not been made yet, but this is a first cut.) Losses due to splices range from .1 to 1 dB and for connectors, .5 to 3 dB.

The next step is to calculate the receiver sensitivity required for the system. We will use the digital system shown in Figure 25 as an example. Using the log scale allows addition, rather than multiplication, of losses.

Transmitter Power	-12 dBm
Transmitter Losses	-1 dB
Connector	-2 dB
Splice	-.05 dB
Connector 2	-2 dB
Fiber Attenuation 2 dB/km	-4 dB
Receiver Losses	-1 dB
Design Margin	-4 dB
S/N Ratio BER	-10 dB
Minimum Receiver Sensitivity	-36.5 dBm

All the specifications on the previous page should now be complete. If not, review what has been missed and seek out that information. Very often, the first design is too costly or some other requirement is missed. Now it's time to do another review of the design. (One method that works quite well is putting the system loop loss on a computer spreadsheet. In the first column show the description of the loss and in column two the value. This provides an index for the value and a description at the same time.) Update the loop loss budget each time. You should be getting closer to meeting all the specifications after each design review.

FIBER OPTIC TEST EQUIPMENT & TOOLS

This chapter will take a brief look at some of the tools used to characterize and inspect a fiber optic system. The equipment covered will include an optical power meter, optical time domain reflectometer, fiber cleaver, fusion splicer, polishing machine, microscope and hand tools.

Optical Power Meter

The optical power meter is analogous to the volt-ohm-amp meter used in electronics. Most meters can read optical power either in watts or dBm.

The meter itself is completely electronic. Modules plug into the meter which contains an optical detector that converts the input optical energy to electrical current. (This module is essentially a calibrated receiver.) Different modules are available for a variety of wavelengths and power levels. Adapters permit testing bare fibers or different connectors.

The optical power meter can be used for a variety of measurements such as fiber attenuation, losses in connectors and splice losses.

Optical Time Domain Reflectometer (OTDR)

An OTDR is a tool similar to an oscilloscope. As the name implies, the optical time domain reflectometer allows evaluation of an optical fiber in the time domain. Useful for testing fiber cable, it provides the user a picture of what is happening along the fiber length.

Figure 26 shows a simple block diagram of an OTDR. A short, high-power pulse is injected into the fiber through a directional coupler. This light travels through the optical fiber, with portions of light scattering backwards due to imperfections or reflections. The return power is directed into the photodetector by the directional coupler and amplified by a receiver. The OTDR displays the returned optical power and the time (distance) on the vertical and horizontal axes respectively. See Figure 27.

Breaks in fibers can be determined by the high magnitude of backscatter due to Fresnel reflections. The location is found by knowing the refractive index of the fiber, reading the time from the OTDR, and calculating the distance. Remember that the time show on the OTDR is the time for two-way travel.

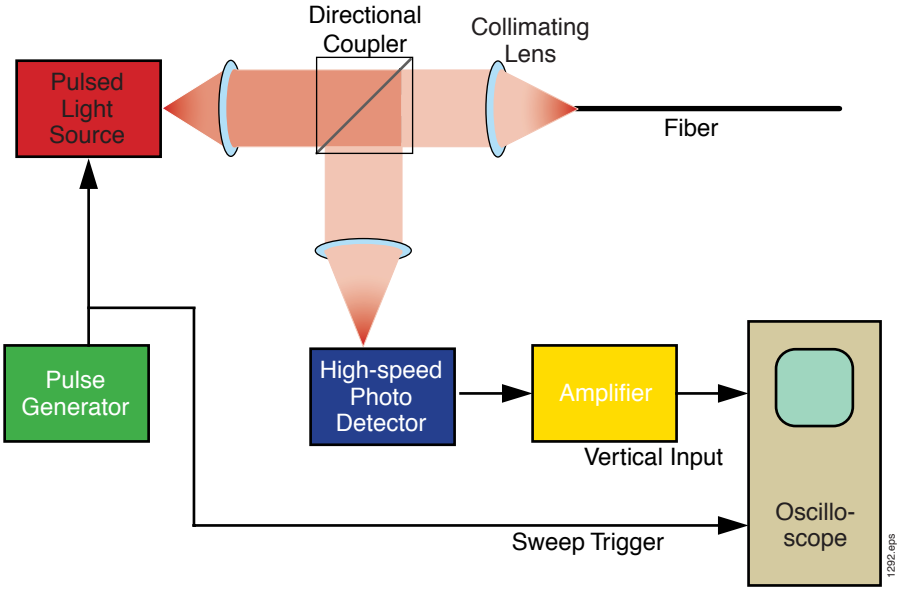

Figure 26. Block diagram of OTDR.

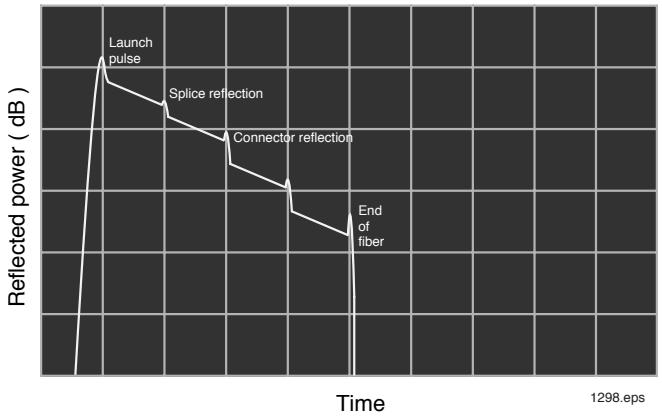

Figure 27. Typical display from an OTDR.

Power Meter

Power meters are a fundamental piece of equipment used in fiber optics, much as a voltmeter is used in electronics. Power meters measure optical energy coming out of a fiber, transmitter, repeater, or other optoelectronic devices used in a fiber optic system. They often are similar in appearance to the digital voltmeters used in electronics; however, they measure optical power in units of watts or dBm. Power meters consist of a photodetector (and appropriate input connector) and a read-out device to measure the light-induced current from the detector. A power meter can be used to measure the total quantity of optical power coming from a fiber or transmitter, and when properly configured, the attenuation or loss through fiber cables and connectors. Figure 28 is of a power meter designed for use with plastic optical fiber.

Figure 28. Optical power meter with a built-in light source.

Fiber Cleaver

The fiber cleaver is a special tool for cutting a glass core fiber. (Glass fibers are really cleaved, since cutting would result in a very poor termination.) Plastic fibers can be cut using any sharp blade, but glass fibers are cleaved by scribing with a diamond or carbide tipped tool. This weakens the fiber, causing it to cleave when bent or stressed. Special jigs or parts of the cleaver are made to cause the fiber to break as close to perpendicular as possible.

Fusion Splicer

The fusion splicer is a very sophisticated tool specifically developed for fiber optics. It has no counterpart in electronics. A fusion splicer is available with many options including a fusion welder, positioning mechanisms for fiber, optical power and a fiber cleaver. The optical power meter checks transmission before and after splicing.

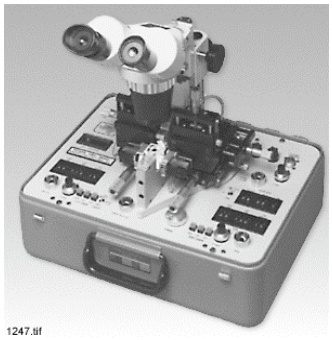

Figure 29. Fusion splice for glass optical fiber

Polishing Machine

The polishing machine partially automates the polishing of fiber optic connectors to produce faster and more consistent end finishes. Machines can contain one or more polishing wheels. Some machines polish only one connector at a time, while others can handle 32 or more. Polishing time ranges from 30 seconds to five minutes.

Microscope

Microscopes are used for close-up inspection of cleaved fiber ends and connector polishes. They are available in either laboratory or portable field models.

Installation Kits

The installation of fiber cable and connectors requires special tools used only in fiber optics. Often these tools are purchased as a kit for a particular fiber or connector type. Choosing a different connector may require additional tools. (One of the reasons fiber optics achieves such high performance is because of the specialized tools and connector systems.) Special tools commonly found in a fiber optic tool kit may include:

Cable stripper for removing jacketing
Scissors for cutting strengthening members
Fiber stripper for removing buffer coating
Scribe tool for cleaving fibers
Crimp tool for crimping connector to fiber
Polishing fixture and materials
Heat gun for heat shrink tubing
Epoxy
Index-matching fluid
Inspection microscope

Fiber optics is used for many applications besides data communications. Every day, non-communication uses of fiber optics affect our lives and we may not even know it. *Are the indicators in the "walk sign" for the crosswalk really individual lights? The light in the ashtray of your automobile? The security alarm in your office?* These are some of the more common applications of fiber optics that we seldom notice. Numerous applications of fiber optics are not widely publicized.

Communication was a latecomer in the world of fiber optics. Early developers had other things in mind. Uses have included imaging, sensing, medical and lens design.

Other Fiber Optic Technologies

GRIN-Lenses

GRIN is an acronym for graded index of refraction. The development of graded-index multimode fiber led to the concept of GRIN lenses.

Review the travel light in graded-index fiber shown in Figure 7 (a). Imagine a section of that fiber being used as a lens. Look at a single ray traveling through a short section of the fiber. The grade index refracts the light rays in that they are constantly changing as the light travels. If a section of fiber was cut after the light had gone through 90° or 270°, the fiber would act as a collimation lens.

A lens which has only 90° of refraction is known as a 1/4 pitch GRIN lens. A 1/2 pitch lens could be used to connect a fiber to a detector.

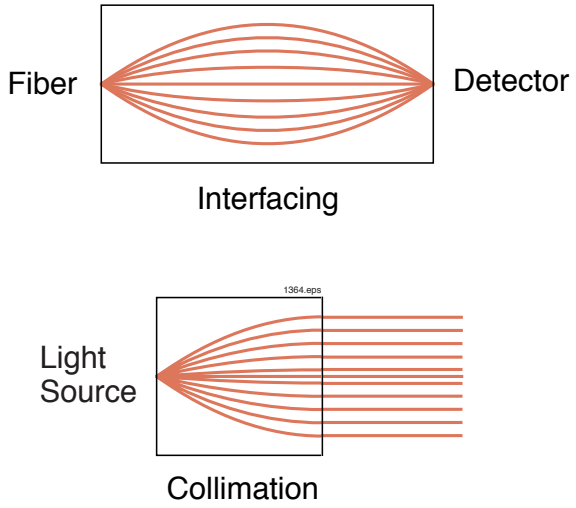

Figure 30. Uses of GRIN lenses.

Practical GRIN lenses are not pieces of graded-index fiber. They are larger in diameter and have a greater refractive index profile. This makes them versatile for applications other than fiber optic interconnects.

Fiber Bundles

The basic principles of fiber optics are the same, whether the fibers are separated or bundled. Each fiber in the bundle transfers light from source to receiver. The two types of fiber bundles are coherent and non-coherent.

Coherent bundles have fibers packaged together in a bundle, retaining a fixed arrangement at both ends, which can transmit an image.

Non-coherent bundles have fibers packaged in a random manner, not retaining a fixed arrangement at the two ends, which scramble the image.

Fiber bundles can be either flexible or rigid. Generally, all non-coherent bundles are flexible, while coherent bundles can be either. Coherent bundles are the easiest to make, if all the fibers are fused together along the entire length. Rigid fiber bundles have limited applications because they do not bend.

A flexible coherent fiber bundle is made by bonding or fusing the fibers together at the ends and maintaining critical alignment at the image points. This leaves the middle region free to move. Individual fibers themselves can be bent into quite small radii, allowing the bundle flexibility. These bundles are usually housed inside a flexible sheath to protect the fibers.

Individual fibers in a flexible coherent bundle can be quite small, but not as small as in a fused rigid bundle. The imaging quality of a bundle is related to the number of fiber cores per unit area.

With flexible bundles, an individual fiber can break, but single fiber breaks do not occur in rigid bundles. The loss of a single fiber is not significant, but if the number increases, the image is eventually lost. Plastic fibers are often used in flexible bundles to allow maximum flexibility.

Most fiber optic bundles are made from a high NA, step-index multimode fiber. Increasing the NA allows for decreased coupling losses and higher transmission. The typical fiber bundle's NA ranges from 0.4 to 0.7. Optical dispersion in fiber bundles is not important.

Fibers used in bundles typically have higher attenuation than communication fibers, around, say, 1 dB/m. For imaging and illumination, visible light is used and a broader transmission band is needed. In some applications, such as medical, fibers may be used at wavelengths where the transmission is not the best — for example, sending an ultra-violet laser beam down a glass fiber. Short-distance glass fibers are usable from 400 to 2000 nm.

Fiber bundles, like single fibers, are not 100 percent core. Each core is surrounded by cladding. Picture a light source imaged onto the end of a fiber bundle. Some light falls onto the cladding. Cladding is not transparent so some transmission efficiency is lost. This loss is not found in single fibers and

makes part of the bundle's overall efficiency dependent on the total core area. Collection efficiency depends on the packing fraction of the bundle defined as:

$$Packing\ fraction = \frac{Total\ core\ area}{Total\ surface\ area}$$

The closer a bundle's packing fraction ratio is to 1 the better the coupling efficiency.

Fiber Optic Face Plates

A fiber optic face plate is a very short, rigid fiber optic bundle. It usually has larger height and width dimensions than depth. Because the applications are very different, we shall consider them separately.

The main role of a face plate is to transfer an image from inside to outside, or vice versa, with as little loss as possible. A faceplate's resolution is limited to the number of fibers per unit area.

Faceplates may be used as a window on a CCD display or a window for an image-intensifier tube. They can be designed to flatten the curved field of a CRT or, by twisting the fiber bundle 180°, invert the optical image. Face plates can be fabricated to function as optical elements in very small, demanding applications.

Applications

Medical

Coherent fiber optic bundles called "endoscopes" constitute the most important use of fibers in the medical field. They can be flexible or rigid, depending on the procedure.

A typical medical procedure might be to examine a patient's bronchial tubes. An endoscope is passed down the throat toward the lungs. Some of the bundle's fibers are used to transmit light into the area for illumination, and others are used to return an image of the region for the doctor's inspection. All of this occurs while the patient is breathing normally.

In many cases, physicians can do more than observe. They can use specific portions of the endoscope to transmit a laser beam into an area to remove plaque in the aorta, or dissolve kidney stones.

Only a small amount of surgery is currently being done with endoscopes, because of the limited use of lasers in the medical field. But, every year, more procedures are being developed. In many cases, laser surgery is superior to conventional methods or has no equivalent.

Automotive

Today's automobiles utilize more electronics than many planes did a few years ago. Every car is controlled to optimize fuel economy, safety, pollution control and driver comfort. Shielding control signals from electromagnetic interference (EMI) has become a major concern in modern cars, e.g., shielding the air-temperature sensors from EMI generated by the power window's motor.

Fiber optics is not new to automobiles and already has been used in many non-communications applications including:

- Dash lights
- Ashtray and glove compartment lights
- Headlight indicators
- Burned out bulb indicators

Copper wiring harnesses today are a nightmare of complexity. Automakers are looking at replacing control signals with fibers. Certain luxury cars in Europe already have fiber optic systems in them. Using fiber optics might allow control signals into the dash or steering column without having to use electric power.

Any material used in an automobile must pass very severe environmental conditions, such as those listed below:

- -40 to 100° C
- -40 to 150° C in engine compartment
- Extended exposure to petroleum-based solvents
- Road salt
- Sun
- Water

Fiber technology has not been used throughout cars previously, due to lack of a high-temperature fiber usable in the engine compartment. Glass fibers can withstand temperatures, but are hard to handle. Recent development of high temperature polycarbonate core in plastic fiber may make fiber feasible throughout. This new polycarbonate core fiber has an operating temperature range of -55°C to 125°C.

Fortunately, the distances between components in cars are short, usually less than eight meters, but the components must be easy to install and inexpensive. Cable and connectors must be compatible with the working expertise of mechanics.

To meet these standards, automakers are considering a jacketed all-plastic fiber with a 1 mm core. Selection will be based on its ease of coupling light into large core, simple terminations, flexibility and cost. The large core size allows for large tolerances on connectors and the use of inexpensive red LEDs and optical photodetector integrated circuits.

The final design to use fiber optics will be based on several factors including a savings or improvement to the consumer, serviceability and reliability. When this occurs, true mass production will begin. The United States alone produces many millions of vehicles every year.

Aircraft

The incorporation of fiber optics into aircraft systems is very similar to automotive applications. The environment is physically hostile and requires even higher performance. Data communication is the principal expected use in aircraft.

A limited amount of fiber optics is used in the B-1 "Stealth" bomber and the MX missile. A study has shown if all the wire cables could be replaced by optical fiber, the B-1's weight would be reduced up to 2,000 pounds. This savings could be used for more fuel, greater payload and reduced operating costs.

Stealth technology avoids the use of metals such as copper. The newer B-2 presumably makes extensive use of fiber optics. In this type of plane, fiber has two additional benefits: electronic countermeasures cannot jam the internal aircraft signals, and the plane's systems do not radiate signals that can be picked up by sensitive listening devices.

Boeing Aerospace Corp. is considering optical fibers for use in its current generation of commercial aircraft to reduce the number or weight of bulky, metal shielded cables; prevent EMI; provide auxiliary cabin lighting and minimize lightning pick-up. Many of the flight control computers already have optical isolation at inputs and outputs to prevent damage.

Illumination

Another use of fiber optics is for illumination. *Why bother with the reduced losses and inconvenience of fiber optics?* A flexible bundle can concentrate light into a small area or deliver light area around a corner. Fiber can be used in combustible atmospheres where conventional lighting could cause an explosion.

Examples of fiber optic illumination:

- Lighting for microscopes
- Auxiliary illumination during a surgical operation
- Use on machine vision for more contrast
- Borescopes for gunsmiths
- Sophisticated map making
- Signs, such as the "walk" signal at crosswalks
- Illumination in explosive atmospheres

Fiber Sensors

After emphasizing how fiber optics is relatively immune to the environment, it may seem unnecessary to consider making fiber optic sensors to detect environmental influences. In fact, transmission of light in fibers *can* be influenced by temperature, pressure, magnetic fields, or rotation. These changes are subtle, and they do not affect normal communication signals, but they do exist. To enhance detection of these influences, a long length of fiber (2 km) may be placed in the sensing location.

Sensors that use fiber optics can be broken down into a few main categories.

- ***Fiber optic probes***, looking for the presence or absence of light.
- ***Remote optical sensors***, which are not the fibers themselves, but that work with light received or transmitted through fibers.
- ***Fiber intensity sensors***, in which a fiber's light transmission changes due to external stimuli.
- ***Color sensors***, which detect changes in the total energy or wavelength being transmitted.
- ***Interferometric sensors***, in which changes in the effective path length of the sensor are monitored by comparing it to another fiber used as a control signal.
- ***Polarization sensors***, which detect externally induced changes in the polarization of light traveling through the fiber.

Fiber Optic Probes

A very simple probe is shown in Figure 31. Any opaque object that passes between these two fibers will be detected. Variations of this sensor may use ambient light or reflected light from the object.

This basic concept is used in many applications such as card readers or counters adjacent to a conveyer belt in a factory. Another is an alignment jig in an automatic punch press in a machine shop. If the part does not line up at all critical points, the press stops and alerts a supervisor.

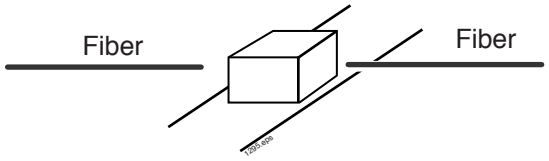

Figure 31. Transmission fiber optic proximity sensor.

Optical Remote Sensors

Some sensors use fibers to carry light to and from optical sensor heads. The amount of light delivered into the receiver fiber changes in response to external stimuli. Two examples are shown in Figure 32.

The liquid level detector operates on the critical angle principle, similar to the effect of fiber core-cladding. When no liquid covers the area of optical interface, light is reflected into the receiver fiber; when immersed in a liquid, the light is dispersed. Similar level sensors are used in environments such as petroleum tanks.

The pressure sensor in Figure 32 indicates pressure as a binary logic function. *Is the pressure over X or not?* This is not a linear pressure sensor. When the pressure exceeds a certain value, the pressure diaphragm deforms and moves to the alternate position, increasing the light passing from one fiber to another.

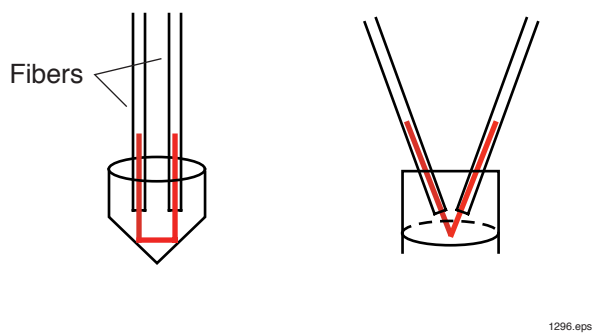

Figure 32. Liquid level and pressure sensors with optical fiber interfaces.

Fiber Intensity sensors

Outside influences can directly affect the transmission characteristics of optical fibers. Weak as these effects may be, they can become significant when averaged over long lengths of fiber.

A temperature sensor could be fabricated from a plastic-clad glass fiber, where the refractive index of cladding increases with temperature — that is, it is greater than the refractive index change in the glass core. Then, as the temperature increases, the numerical aperture would decrease. Using a light source and photodetector pair, the decrease in NA could be measured. The detected receiver power would be a function of temperature.

Color Sensors

Similar to an intensity sensor, the fiber in a color sensor transfers energy created by some other means: for example, an ultraviolet source illuminating a phosphorus screen and the fiber optic cable collecting the emitted fluorescence and coupling it to a spectrophotometer. Another example is a remote object imaged onto an infrared fiber, with this light energy delivered to an infrared detector. The magnitude of infrared emission is related to the object's temperature.

Interferometric Sensors

Interferometric sensors are the most sensitive of all fiber optic sensors. They use single-mode fiber, detecting small changes in phase within a fiber to measure very slight changes in pressure, temperature, rotation, etc.

To understand interferometric sensors, look at Figure 33. The sum of signals "a" and "b" is zero. Adding "a" and "c" together does not yield zero. In fact, "a" and "b" are 180° out of phase with each other. Imagine a sensor where the phase of "b" would change according to the stimuli being added to a reference "c".

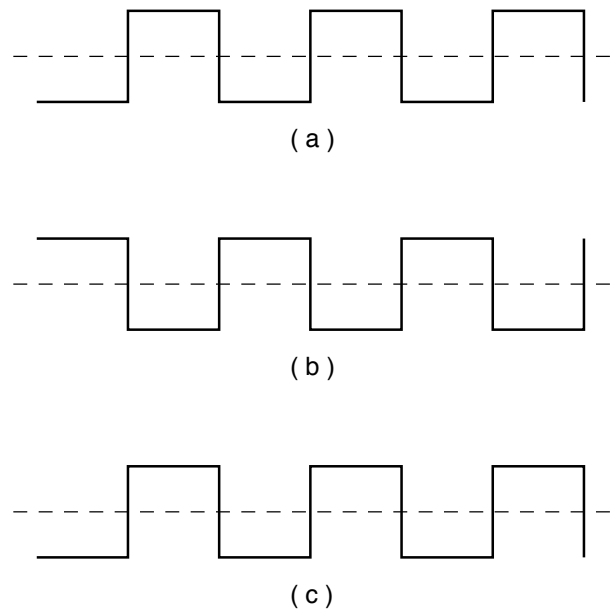

Figure 33. Typical signals for interferometric sensors.

In an interferometric sensor, the phase of the sensing arm is compared to the phase of a reference arm. In an optical fiber sensor, both signals travel through fibers; one is the standard and the other is the sensor. See Figure 34 for a functional diagram of an interferometric sensor.

The sensing fiber changes the phase of its optical signal by increasing or decreasing the optical path length. This can be a result of changes in refractive index in the core or length of the fiber. In either case, only a small amount of change will affect the phase significantly, since the wavelength is about 1 µm.

Several successful sensors have been developed using interferometric techniques. Two that have been tested extensively are the fiber optic gyroscope and the hydrophone, used for navigation and underwater acoustic sensing, respectively.

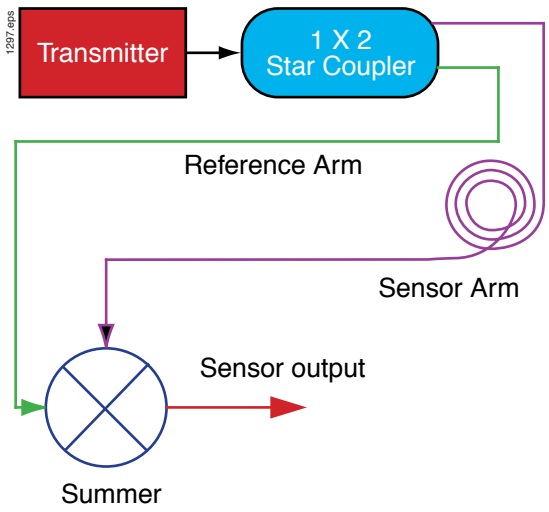

Figure 34. Typical components in a fiber optic interferometric sensor.

Polarization Sensors

Special single-mode fibers have been fabricated that retain the polarization of light launched into them. Outside phenomena can affect the polarization inside the fiber. Fiber sensors take advantage of this property. Polarization sensors have been developed for practical applications, using polarization as a sensing mechanism.

Maxwell's equations predict that a magnetic field will rotate the polarization (electric fields) of optical light. Electrical currents create magnetic fields. A polarization-sensitive, fiber optic sensor could measure current flow by monitoring the rotation of polarization vectors at the exit aperture of an optical fiber by placing a fiber in the local magnetic field.

LAB SESSION I

This is the first of a two-part lab session designed to help students gain practical experience in design, assembly and integration of a fiber optic system. During these two sessions you will construct and test a digital fiber optic data link. To complete these sessions you will need the materials listed in Table 8.

Tools and Test Equipment Required

Wire cutters, needle-nose pliers, small screwdriver, small adjustable wrench, rosin core solder, 25-watt soldering iron, single-edge razor blade or sharp knife, wire-stripper, + 5 volt supply, oscilloscope, water or light oil.

Assembly Instructions

Mount all devices on the printed wiring board marked "Component Side" and opposite the conductive traces. To prevent damage, avoid applying prolonged heat to any part of the board or component. After soldering each component, trim its lead length flush with solder.

Transmitter

The assembly diagram shown in Figure 35 will aid in proper placement of components.

1. Insert D1 on the transmitter printed wiring board. Fasten in place with the screw and nut provided. Solder the leads.

2. Identify pin 1 of U1, (the lower left-hand pin when viewed from above,) and the hole marked pin 1 on the printed wiring board. Insert U1, making sure all pins go through proper holes in the printed wiring board, then solder.

3. Using Detail A of Figure 36, insert Q1 into the board and solder.

4. The resistors are color-coded to identify their value. See Table 8 for the proper combination of color bands. Identify each resistor, insert in the board and solder. End-to-end orientation of the resistor is not important.

5. Insert C1 into board and solder. End-to-end orientation of this part is also not important.

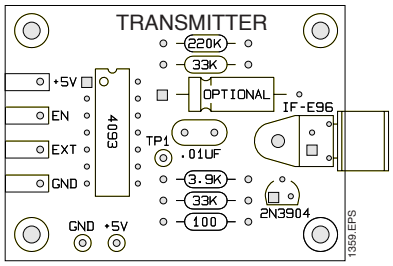

Figure 35. Transmitter printed wiring board

Table 8. Parts List for Lab Sessions I and II.

	Transmitter	Receiver	Description	Color-code
D1	IF-E96		Fiber Optic LED	Pink dot
Q1	2N3904	2N3904	NPN Transistor	
Q2		IF-D92	Phototransistor	White dot
U1	4093	4093	Quad CMOS NAND IC	
R1	220 kΩ		1/4 watt resistor	Red Red Yellow
R2	33 kΩ		1/4 watt resistor	Orange Orange Orange
R3	3.9 kΩ		1/4 watt resistor	Orange White Red
R4	33 kΩ		1/4 watt resistor	Orange Orange Orange
R5	100Ω		1/4 watt resistor	Brown Black Brown
R6		33 kΩ	1/4 watt resistor	Orange Orange Orange
R7		1 kΩ	1/4 watt resistor	Brown Black Red
C1		0.01 µf	Mylar® capacitor	
H1	(1)	(1)	Size 2 Screw and nut	
H2	(1)	(1)	Printed wiring boards	
H3	(1)		Polishing paper	
H4	(1)		1 meter 1000 µm core fiber cable	

Receiver

Assemble the receiver board following steps 1 through 4 of the transmitter assembly instructions. The physical layout and designs of the two boards are different, but the steps are the same. Refer to Figure 36 for proper part placement.

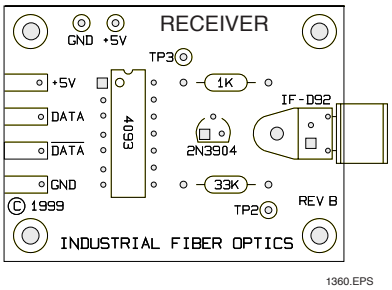

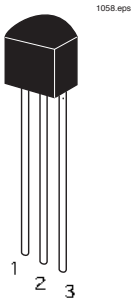

1 Emitter
2 Base
3 Collector

Detail A

Figure 36. Receiver printed wiring board and detail of 2N3904 Transistor.

Fiber Termination Instructions

Termination of the fiber cable is identical for both receiver and transmitter. Complete steps 1 through 3 for both ends of the fiber.

1. Cut the fiber with a single-edge razor blade or sharp knife, trying to get as square a cut as possible.

2. Wet the polishing paper with water or light oil. Place the paper on any hard flat surface. Polish the end of the fiber while holding the fiber perpendicular to the polishing surface. Supporting the fiber with a flat object during polishing will aid in obtaining a good termination (such as the back side of one of the printed wiring boards).

3. Remove 2 to 3 mm of jacket with an 18-gauge wire stripper to expose bare fiber. Avoid nicking the fiber.

Do not insert the cable into the fiber optic connectors yet.

Exercises

1. With one hand near the end of the optical fiber, hold it toward a light source. Meanwhile, visually observe the other end, noting the change in brightness as the other end is moved about or covered with your finger. Now point the fiber at different colored objects and note that the fiber transmits different colors of light. Do any colors transmit better than others?

2. Move one end of the cable across the graphic elements in Figure 36. What do you see in the other end? Is the image coherent or non-coherent?

3. Connect the cable to the transmitter module using the instructions in Figure 37. Connect the Enable pad to ground and the "External" pad to +5 on the transmitted printed wiring board. With power applied, the transmitter LED will be on. A red glow will be visible from the receiver end of the fiber. If not, first dim the lights and check again. Now check the power supply, transmitter mode, assembly, etc.

4. Design an alternate drive circuit for the LED.

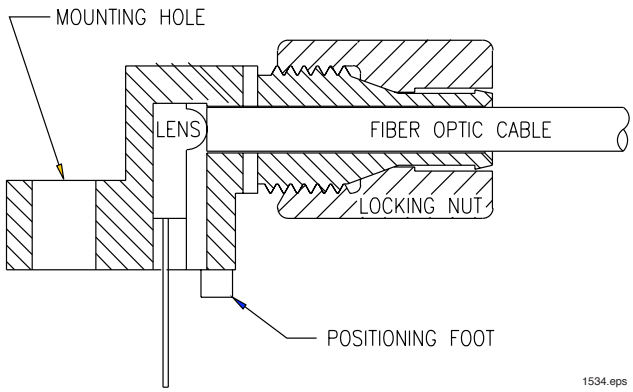

Insert the terminated fiber through the locking nut and into the connector until the core tip seats against the molded lens, inside the device package.

Screw the connector locking nut down to a snug, finger-tight fit, locking the fiber in place.

Figure 37. Fiber connector assembly diagram.

Theory of Operation

After completing this lab session you will have a much greater appreciation of fiber optic transmitter and receiver design. The hardware you complete and test will be suitable for a data communication application such as an RS232 interface.

Transmitter

This fiber optic transmitter is composed of an oscillator, a buffer, LED driver and LED. A circuit diagram of the transmitter is shown in Figure 38. The transmitter contains a built-in oscillator which allows the user to observe operation without a function generator. The transmitter has four modes of operation as shown in Table 9.

Table 9. Transmitter oscillator truth table.

Mode	Enable	External	State
1	0	1	LED on
2	0	0	LED off
3	1	1	Oscillator enabled
4	1	0	LED off

An external connection has been provided to allow the user to input any signal. This function will permit you to use the data link for data transmission outside this class. To use this option, make the Enable a logical "zero" (connect to ground) and connect your signal input to the External pad.

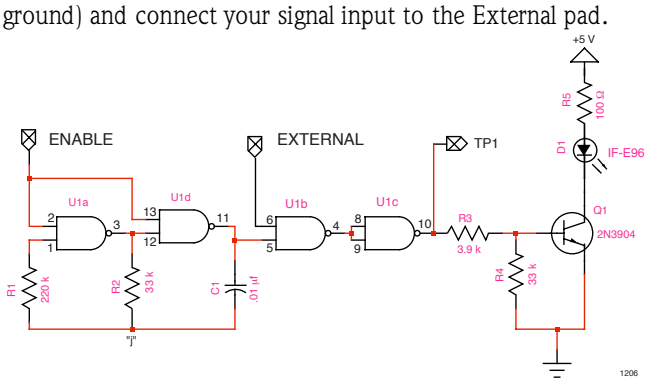

Figure 38. Transmitter circuit diagram.

Gates “a” and “b” of U1 make up a two-gate relaxation oscillator. When the "Enable" is low, output of both gates is high, or the oscillator is disabled. If the Enable input is high, all the gates behave as inverters and each gate's output is the complement of its other input.

To understand operation, let’s start by assuming that the input to "a" is a 0. Therefore the output of "a" is a 1, and the output of "b" is a 0. The output of "a" is high, and tries to charge C1 through R2. As C1 charges up, a point is reached where the input to gate "a" is no longer a 0 but a 1, and the output of "a" becomes a 0 and output "b" goes high. The output of "b" having changed from a logical 0 to a 1 reverses the current flow from output "b" through C1 and R2. As C1 discharges, the voltage at input "a" decreases and soon the input at "a" is no longer a logical 1 but a 0. And the process repeats. The oscillator frequency is set by the time constant R2 - C1.

Gate "c" sharpens or digitizes the oscillating waveform and offers capability for an external drive. (Using a NAND as an inverter is a trick commonly utilized in designs to reduce the number of parts.) Gate "d" isolates the oscillator from the LED driver, and returns signals to polarity at pin.

The LED drive for the transmitter is created Q1, R4 and R5. Q1 is a transistor switch, saturating when gate "d" goes high, i.e., closes. The maximum current through the LED with Q1 saturated, is:

$$I = \frac{V_{cc} - V_{ce} - V_{LED}}{R_5}$$

$$V_{cc} = 5 \ volts$$
$$V_{ce} = 0.2 \ volts$$
$$V_{LED} = 1.5 \ volts$$
$$R5 = 100 \ ohms$$

Note that the LED drive current is independent of gate "d's" drive current or voltage, assuming Q1 is saturated. LED current is zero when gate “d” is low.

Receiver

This fiber optic receiver is composed of a detector/preamplifier, amplifier, and digitizer. A schematic is shown in Figure 37.

The detector for this system is a phototransistor. Conversion of light energy to electrical current occurs at the base junction of Q2. The light photons generate hole/electrons pairs, which in an applied field causes a current to flow. Then, similar to conventional transistors, the base current is amplified by the current gain, h_{fe}. The transfer function of the phototransistor is the reponsivity R (amps per watt).

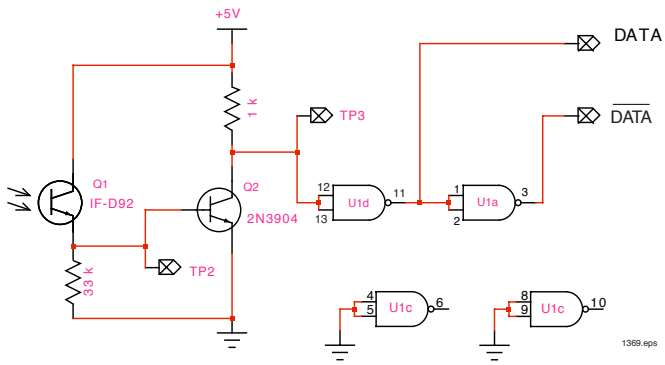

Figure 39. Receiver schematic.

The amplifier is a common emitter NPN amplifier. The 220bk resistor from the base of Q1 to ground prevents Q1 from turning on due to leakage current through Q2 and provides a discharge path for Q1's base capacitance after the phototransistor turns off. The voltage gain of the common emitter amplifier is:

$$V_o = I_{b1} \bullet h_{fe} \bullet R_2$$
$$h_{fe} - current\ \ gain\ \ of\ \ Q1,\ typical\ \ 50$$
$$I_{b1} - base\ \ current\ \ of\ \ Q1$$
$$R_2 - load\ \ resistor,\ 1k$$

Since R1 is very large, I_{b1} is approximately equal to $I_{phototransistor}$.

$$V_o = 5 - \left(I_{phototransistor} \bullet h_{fe} \bullet R_2\right)$$

The final element, the digitizer, converts the analog signal to digital levels, sharpens the rise and fall times, provides noise immunity and insures proper output voltage for driving the external logic. The circuit for the digitizer is a NAND Schmitt CMOS gate.

Exercises

1. What is the minimum voltage level of gate "d" necessary to insure saturation of Q1, assuming h_{fe} = 50, V_{ce} = 0.2 volts, V_{cc} = 5 volts, and V_{LED} = 1.5 volts?

2. What is the transfer function of the phototransistor and common emitter amplifier, assuming the responsivity of Q1 is 25 amps/watt and the h_{fe} of Q1 is 50.

3. How would you adjust this receiver's threshold?

4. Connect the receiver, fiber and transmitter as shown in Figure 37.

5. Set the transmitter to mode 2, (LED off) and measure and record the voltage at the collector of Q1 of the receiver. Now with the transmitter in mode 1, measure the voltage at collector of Q1. Determine the power striking the base of phototransistor to cause this voltage swing. (Hint: The answer from question 2 will help.)

6. With a dual trace oscilloscope, monitor the voltage at collector of Q_1 for both the transmitter and receiver. With the transmitter in mode 3, the signal at Q_1 of the transmitter will be a periodic signal. This periodic signal will also appear at the receiver with some slewing of rise and fall times expected. Determine the frequency of the oscillator, and rise and fall times of the receiver at collector of Q_1. Move the oscilloscope probes to the Data line of the receiver. Observe the sharpening of rise and fall times of the digitizer.

7. Determine the maximum length of cable this system can use and still function properly. Assume a minimum receiver sensitivity of 1 x 10^{-6} watts, 20 x 10^{-6} watts of power launched into the fiber, and 1 dB attenuation per meter of fiber.

8. What is the maximum data rate of this data link? (It can be empirically determined using an external function generator or from using the rise and fall times measured in 6.)

9. If instruments are available for measuring optical power, disconnect the fiber from receiver, put the transmitter in mode 1, and measure the optical power out of the fiber. Recalculate the maximum distance this data link can be used for.

10. Design a receiver and transmitter using pnp transistors and -5 volt power supply.

REFERENCES

Books

Understanding Fiber Optics, Third Edition, Hecht, Prentice-Hall, Inc., 1 Lake St., Upper Saddle River, NJ 07458-1997

A User's Manual for Optical Waveguide Communications, Gallawa, U.S. Department of Commerce

An Introduction to Optical Fibers, Cherin, McGraw-Hill Publishing, 11 W. 19th St., New York, NY 10011, 1983

Technicians Guide to Fiber Optics, Sterling, Third Edition, 2000, AMP Incorporated, Harrisburg, PA 17105,1987 (Paperback), ITP Education Group, Box 95971, Chicago, IL 60694 (Hardbound Version)

Fiber Optics, Hoss and Lacy, Prentice-Hall, Inc., 1 Lake St., Upper Saddle River, NJ 07458, 1993

Fiber Optics, Daly, CRC Press

Fiber Optic Communications, Fourth Edition, Joseph Palais, Prentice-Hall Inc., 1 Lake St., Upper Saddle River, NJ 07458, 1998

Fiber Optics in Communication Systems, Elion and Elion, Marcel Dekker, Inc., 270 Madison Ave., New York, NY 10016-0602

Fiber Optic Reference Guide: A Practical Guide to the Technology, David R. Goff, Butterworth, 225 Wildwood Avenue, Ste. B, Woburn, MA 01801, 1996

Fundamentals of Optical Fibers, John A. Buck, John Wiley & Sons, Inc., 605 Third Avenue, New York, NY 10158-0012, 1995

Optical Fiber Transmission, E.E. Basch, Howard W. Sams Publishing, 4300 W. 62nd St., Indianapolis, IN, 1986

Principles of Optical Fiber Measurements, Marcuse, Academic Press, 1974

Semiconductor Devices for Optical Communications, Kressel, Springer-Verlag, Inc., 175 5th Ave., New York, NY 10010, 1980

Semiconductor Laser and Heterojunction LEDs, Butler and Kressel, Academic Press, Inc., 1250 Sixth Ave., San Diego, CA 92101

Laser Receivers, Ross, John Wiley & Sons, Inc., 605 Third Ave., New York, NY 10158-0012, 1966

Noise in Electronic Circuits, Ott, John Wiley & Sons Inc., 605 Third Ave., New York, NY 10158-0012

Fiber Optics Handbook, Second Edition, Christian Hentschel, Hewlett Packard, 3000 Hanover St., Palo Alto, CA 94304, 1988

Safety with Lasers and Other Optical Sources, Stiney and Wolbarsht, Plenum Press

Safe Use of Lasers, ANSI Standard Z136.1, LIA, 5151 Monroe, Toledo, Ohio 43623

Monthly publications

Applied Optics, Optical Society of America, 1816 Jefferson Pl., NW, Washington, DC 20036

Fiberoptic Product News, Gordon Publications, Inc., 301 Gibraltar Dr., Box 1952, Morris Plains, NJ 07950-0650

Laser Focus World, PenWell/ATD, Ten Tara Blvd., Fifth Floor, Nashu, NH 03062-2801

Lightwave Magazine, PenWell/ATD, Ten Tara Blvd., Fifth Floor, Nashu, NH 03062-2801

Optical Engineering, SPIE, P. O. Box 10, Bellingham, WA 98227-0010

Photonics Spectra, Laurin Publishing Co., Berkshire Common, 2 South St., P.O. Box 4949, Pittsfield, PA 01202-4849

Buyers Guide

Fiberoptic Product News Buying Guide, Gordon Publications, Inc., 301 Gibraltar Dr., Box 650, Morris Plains, NJ 07950-0650

Lightwave Buyer's Guide, PenWell/ATD, Ten Tara Blvd., Fifth Floor, Nashu, NH 03062-2801

Photonics Spectra Buyer's Guide, Laurin Publishing Co., Berkshire Common, 2 South Street, P.O. Box 4949, Pittsfield, PA 01202-4949

Organizations

Optical Society of America, 1816 Jefferson Pl., NW., Washington, DC 20036

Society of Photo-Optical Instrumentation Engineers (SPIE), P.O. Box 10, Bellingham, WA 98227-0010

Laser Institute of America, 12424 Research Parkway, Suite 125, Orlando, FL 32826

Glossary

Absorption. In an optical fiber, loss of optical power resulting from conversion of that power into heat. Intrinsic causes of absorption in a fiber involve tails of the ultraviolet and infrared absorption bands. Extrinsic components causing loss include impurities, e.g., the OH- ion and transition metal ions, and defects, e.g., results of thermal history and exposure to nuclear radiation. See also: Attenuation.

Acceptance angle. The half-angle of the cone within which all incident light is totally internally reflected by the fiber core. Acceptance angle is related to the fiber NA: $\theta = \sin^{-1}$ NA. Note: For graded-index fiber, acceptance angle is a function of position on the entrance face of the core. In that case, the local acceptance angle is

$$\theta_r = \sin^{-1}(\eta_1^2 - \eta_2^2)^{0.5}$$

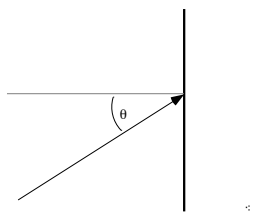

where n_1 is the local refractive index and n_2 is the minimum refractive index of the cladding.

Active port diameter. On a light source or detector, the diameter of the area in which light can be delivered to or received from an optical fiber.

Angle of incidence. The angle between an incident ray and a line perpendicular to a reflecting or refracting surface. See also: Critical angle; Total internal reflection.

Angstrom (Å). A unit of optical wavelength (obsolete). 1 Å= 10^{-10} meters. Note: The angstrom has historically been used in the field of optics, but it is not an SI (International System) unit.

Angular alignment. The alignment of two optical fibers with respect to the angle formed by their axes.

Angular misalignment loss. The optical power loss caused by the angular deviation from the optimum alignment of source to optical fiber, fiber-to-fiber, or fiber-to-detector. See also: Extrinsic joint loss; Intrinsic joint loss; Lateral offset loss.

Anti-Reflection (AR) coating. A thin layer of material applied to an optical surface to reduce reflectance and to increase transmittance. The ideal value of the refractive index of a single-layered film is the square root of the product of the refractive indices on either side of the surface to which it is applied, the ideal optical thickness being one quarter of wavelength.

Attenuation. In an optical fiber, the diminution of average optical power. Note: In optical fiber, attenuation results from absorption, scattering and other radiation losses. Attenuation is generally expressed in dB without a negative sign. Calculations and equations involving loss show and use the negative sign. Attenuation is often used as a synonym for attenuation coefficient, expressed in dB/km. This assumes the attenuation coefficient is invariant with length.

Attenuation coefficient. A factor expressing optical power loss per unit of length, expressed in dB/km. The sum of scattering and absorption coefficients.

Attenuation-limited operation. The condition prevailing when the received signal amplitude (rather than distortion) limits performance. See also: Bandwidth-limited operation; Distortion-limited operation.

Acousto-optic modulator. A device that varies the amplitude and phase of a light beam, e.g., from a laser, by sound waves.

Avalanche photodiode (APD). A photodiode that has gain in its output power compared to the optical power that it receives through avalanche multiplication of photocurrent. Note: As the reverse-bias voltage approaches the breakdown voltage, hole-electron pairs created by absorbed photons acquire sufficient energy to create additional hole-electron pairs when they collide with ions; thus, a multiplication (signal gain) is achieved. See also: Photon; PIN photodiode.

Axis. A straight line, real or imaginary, passing through a body and indicating its center; a line so positioned that various portions of an object are located symmetrically in relation to the line. Plural = **Axes.**

Axial ray. A light ray that travels along the optical fiber's axis. See also: Meridional ray; Skew ray.

Backscattering. The portion of scattered light which returns in a direction generally reverse to the direction of light travel. See also: Rayleigh scattering; Reflectance; Reflection.

Bandwidth. The range of frequencies handled by a device or system. See also: Fiber bandwidth.

Bandwidth-limited operation. The condition prevailing when the system bandwidth, rather than the amplitude (or power) of the signal, limits performance. This condition is reached when material and modal dispersion distort the shape of the waveform beyond specified limits. See also: Attenuation-limited operation; Distortion-limited operation; Material dispersion; Modal dispersion.

Beam diameter. The distance between two diametrically opposed points at which the irradiance is a specified fraction of the beam's total irradiance; most commonly applied to beams that are circular or nearly circular in cross section. Synonym: Beamwidth. See also: Beam divergence.

Beam divergence. The increase in beam diameter with increase of distance from the source.

Beamwidth. See Beam diameter.

Beamsplitter. A device for dividing an optical beam into two or more separate beams; often a partially reflecting mirror. See also: Coupler; Splitter.

Birefringence. The separation of a light beam as it penetrates a doubly refracting material, into two diverging beams, commonly known as ordinary and extraordinary beams.

Bit Error Rate (BER). In digital applications, the ratio of bits received in error to bits sent. BERs of 10^{-9} (one error bit in billion sent) are typical.

Boltzman Constant. A constant equal to 1.38×10^{-23}.

Buffer. See Fiber buffer.

Cable. An optical fiber, multiple fibers, or fiber bundle which may include a cable jacket and strength members, fabricated to meet optical mechanical, and environmental specifications. See also: Fiber buffer; Fiber bundle.

Characteristic angle. The angle at which a given mode travels down an optical fiber.

Chromatic dispersion. The change in refractive index versus wavelength which causes a difference in the travel speed of light in a fiber.

Cladding. A low-refractive-index, glass or plastic that surrounds the core of a fiber. Optical cladding promotes total internal reflection for the travel of light in a fiber.

Cladding mode. A mode that is confined by virtue of a lower refractive index medium surrounding the cladding. See also: Mode.

Cladding mode stripper. A device that encourages conversion of cladding modes to radiation modes. As a result of its use, cladding rays are stripped from the fiber. A cladding mode stripper often uses a material having a refractive index equal to or greater than that of the waveguiding cladding to induce this conversion. See also: Cladding; Cladding mode.

Collimation. The process by which a divergent or convergent beam of radiation is converted into a beam with the minimum divergence possible for the system (ideally a parallel bundle of rays). See also: Beam divergence.

Combiner. A passive device in which optical power from several input fibers is collected at a common point. See also: Coupler.

Connector. A junction which allows an optical fiber or cable to be repeatedly connected to or disconnected from a device such as a source or detector.

Concatenation. The process of connecting pieces of fiber to a link, either by splicing or connectors.

Core. The light-conducting portion of a fiber, defined by its high refractive index. The core is normally in the center of a fiber, bounded by a concentric layer of cladding with lower refractive index.

Coupler. A device whose purpose is to distribute optical power among two or more ports, or to concentrate optical power from two or more fibers into a single port. Couplers may be active or passive. See also: Combiner; Splitter; Star Coupler.

Coupling efficiency. The fraction of available output from a radiant source which is received and transmitted by an optical fiber, The coupling efficiency for a Lambertian radiator is usually equal to the $\sin^2 \Omega$ maximum for the optical fiber being used. See also: Lambertian radiator.

Coupling loss. The power loss suffered when transferring light from one optical device to another. See also: Angular misalignment loss; Extrinsic joint loss; Insertion loss; Intrinsic joint loss; Lateral offset loss.

Critical angle. The smallest angle at which a meridional ray may be totally reflected within a fiber at the core-cladding interface. When light travels in a homogeneous medium of relatively high refractive index (n1) onto an interface with a homogeneous material of lower index (n2), the critical angle is defined by $\sin^{-1}$ (n1/n2). See also: Acceptance angle; Angle of incidence; Meridional ray; Reflection; Refractive index (of a medium); Total internal reflection.

Cutback technique. A technique for measuring fiber attenuation or distortion by performing two transmission measurements. One is at the full length of the fiber and the other is with a portion cut back from the original length.

Dark current. The external current that, under specified biasing conditions, flows in a photodetector when there is no incident radiation. The average or DC value of this current is identified by the symbol, Id.

Data rate. The maximum number of bits of information which can be transmitted per second, as in a data transmission link. Typically expressed as megabits per second (Mbps).

Decibel (dB). A standard unit used to express gain or loss of optical power.

$$dB = 10 \bullet \log_{10}\left(\frac{P_2}{P_1}\right)$$

Detector. A transducer that provides an electrical output signal in response to an incident optical signal. The current or voltage is dependent on the amount of light received and the type of detector. See also: Receiver.

Dispersion. Distortion of an electromagnetic signal caused by different propagation characteristics (speed) of different wavelengths and the differing path lengths of modes in a fiber. See also: Material dispersion; Modal dispersion.

Distortion-limited operation. The condition prevailing when distortion of a received signal, rather than its amplitude (or power), limits performance. The condition reached when a system distorts the shape of the waveform beyond specified limits. In a fiber-optic system, it usually results from material and modal dispersion. See also: Attenuation-limited operation; Bandwidth-limited operation; Material dispersion; Modal dispersion.

Duplex. Dual. A fiber-optic cable that contains two optical fibers.

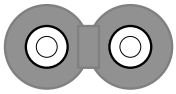

Electro-optic effect. Describes the change of a material's refractive index or the change of birefringence under the influence of an electric field, e.g., lithium-niobate.

End finish. Quality of the surface at an opticfiber's end, commonly described as mirror, mist, hackle, chipped, cracked, or specified by final grit size used in polishing (1 µm, 0.3 µm, etc.)

End separation loss. Optical power loss caused by a longitudinal distance between the end of a fiber and a source, detector, or fiber. See also: Extrinsic joint loss.

Equilibrium length. For a specific excitation condition, the length of multimode optical waveguide necessary to attain stable distribution of power among propagating (light travel) modes.

Equilibrium mode distribution (EMD). The condition in a multimode optical fiber in which the relative power distribution among propagating modes is independent of length. Synonym: Steady-state condition. See also: Equilibrium length; Mode; Mode coupling.

Extraordinary ray. A ray that has a non-isotropic speed in a doubly refracting crystal. It does not necessarily obey Snell's law upon refraction at the crystal interface. See also: Birefringence.

Extrinsic joint loss. Loss caused by imperfect alignment of fibers in a connector or splice. Contributors include angular misalignment, lateral offset, end separation and end finish. Generally synonymous with insertion loss. See also: Angular misalignment loss; End separation loss; Intrinsic joint loss; Lateral offset loss.

Faraday effect. The effect, discovered by James Faraday in 1945, whereby non-optically active materials rotate the polarization plane of polarized light passed through them when placed in a strong magnetic field.

Ferrule. A component of a fiberoptic connection that holds a fiber in place and aids in its alignment.

Fiber (optical). Any filament, made of dielectric materials, that guides light, whether or not it is used to transmit signals. Synonym: Optical waveguide. See also: Fiber bundle.

Fiber bandwidth. The frequency at which the magnitude of the fiber transfer function decreases to a specified fraction of the zero frequency value. Often, the specified value is one-half the optical power at zero frequency.

Fiber buffer. Material used to protect an optical fiber or cable from physical damage, providing mechanical isolation or protection. Fabrication techniques include tight jacket or loose tube, buffering, as well as multiple buffer layers. See also: Fiber Bundle.

Fiber bundle. An assembly of unbuffered optical fibers. Usually used as a single transmission channel, as opposed to multiple cables, which contain optically and mechanically isolated fibers, each of which provides a separate channel.

Fiberoptic link. Any optical transmission channel designed to connect two end terminals or to be connected in series with other channels.

Fresnel reflection. Reflection of a portion of the light incident on a planar interface between two homogeneous media with different refractive indices. A Fresnel reflection occurs at the air-glass interfaces at entrance and exit ends of an optical fiber. Resultant transmission losses (about four percent per interface) can be virtually eliminated by use of anti-reflection coatings or index matching materials.

Graded-Index. An opticalfiber core whose refractive index is changed in a systematic way from center to edges to decrease modal dispersion.

Inclusion. The presence, within a body of glass, of an alien or extraneous material.

Incoherent. A term denoting the lack of a fixed phase relationship between two or more waves. In fiber optics it applies to LEDs which emit multiple or a band of frequencies.

Index-matching material. A material, often a liquid or cement, whose refractive index is nearly equal to the core index, used to reduce Fresnel reflections from an optical fiber's end face. See Also: Fresnel reflection; Refractive index.

Index of Refraction. The ratio of the velocity of light in a vacuum to the velocity of light in a given medium.

Index profile. In a graded-index optical fiber, the refractive index as a function of radius.

Infrared (IR). The span of electromagnetic wavelengths above the visible part of the spectrum (about 0.75 µm) and below microwaves (about 30 µm).

Injection laser diode. A solid state semiconductor device consisting of at least one p-n junction capable of emitting coherent, stimulated radiation under specified conditions.

Insertion loss. Total optical power loss caused by insertion of an optical component such as a connector, splice, or coupler into a previously continuous path.

Interference. 1. The additive process whereby the amplitudes of two or more waves are systematically attenuated and reinforced. 2. The process whereby a given wave is split into two or more waves by, for instance, reflection and refraction of beam splitters, and then possibly brought back together to form a single wave.

Integrated detector/preamplifier. A single chip containing a detector and an amplifier which converts optical signals to usable electrical output.

Intrinsic joint loss. Loss caused by fiber-parameter (e.g., core dimensions, profile parameter) mismatches when two nonidentical fibers are joined. See also: Extrinsic joint loss; Lateral offset loss.

Lambertian radiator. An optical source which has radiance uniform in all directions, proportional to the cosine of the angle from the perpendicular.

Laser. A device that produces monochromatic, coherent light through stimulated emission. Most lasers used in fiberoptic communications are solid-state semiconductor devices. See also: Injection laser diodes; Stimulated emission.

Lasing threshold. The lowest excitation level at which a laser's output is dominated by stimulated emission rather than spontaneous. See also: Laser; Spontaneous emission; Stimulated emission.

Lateral offset loss. An optical power loss caused by transverse or lateral deviation from optimum alignment of source to optical fiber, fiber-to-fiber, or fiber-to-detector.

Launch angle. The angle between an incoming light ray and the optical axis of an optical fiber or bundle.

Leaky Ray. In an optical waveguide, a ray for which geometric optics would predict total internal reflection at the core boundary, but suffer less by virtue of the curved boundary.

Light. 1. In a strict sense the visible spectrum, nominally covering the wavelength of 400 nm to 750 nm. 2. In the laser and optical communication fields, the much broader portion of the electromagnetic spectrum that can be handled by the basic optical techniques used for the visible spectrum extending from the near-ultraviolet region of approximately 0.3 µm, through the visible region, and into the far-infrared region to 30 µm. See also: Infrared (IR).

Light emitting diode (LED). A semiconductor device which emits incoherent light from a p-n junction when biased with an electrical current. Light may exit from the junction stripe-edge or from its surface (depending on the device's structure).

Loss. See: Attenuation; Absorption; Angular misalignment loss; Insertion loss; Intrinsic joint loss; Lateral offset loss; Material dispersion; Microbending; Rayleigh scattering; Reflection; Transmission loss.

Macrobending loss. Light loss due to rays exiting the waveguide because the incident angle is less than critical angle due to bends greater than fiber diameter. Does not cause radiative losses.

Material dispersion. Light impulse broadening caused by various wavelengths of light traveling at different velocities through a fiber. Material dispersion increases with increasing spectral width of the source.

Meridional ray. A ray that passes through the optical axis of an optical fiber (in contrast with a skew ray, which does not). See also: Axial ray; Numerical aperture; Skew ray.

Mesail power. The mathematical average between high and low levels of power of a modulated signal, independent of duty cycle.

$$\frac{P_{high} + P_{low}}{2}$$

Microbending Loss. In an optical fiber, light loss caused by sharp curvatures involving local axial displacements of a few micrometers and spatial wavelengths of a few millimeters. Such bonds may result from fiber coating, cabling, packaging, installation, etc. Note: Microbending can cause significant radiation losses and mode coupling, See also: Macrobending.

Modal dispersion. In a multimode optical fiber, pulse distortion resulting from differential mode travel rates.

Modal noise. The noise generated at exit aperture of a waveguide when using a coherent light source. The effect is caused by interference between modes in the waveguide. See also: Mode; Interference.

Mode. In any cavity or transmission line, one of the electromagnetic field distributions that satisfies Maxwell's equations and the boundary conditions. The field pattern of a mode depends on the wavelength, refractive index, and cavity or waveguide geometry.

Mode coupling. In an optical fiber, the exchange of power among modes. The exchange of power may reach statistical equilibrium after passage over a finite distance that is designated the equilibrium length. See also: Equilibrium length; Mode; Mode scrambler.

Mode filter. A device for inducing mode coupling in an optical fiber to establish equilibrium.

Mode Scrambler. A device for inducing or promoting mode coupling in an optical fiber.

Multifiber cable. An optical cable that contains two or more fibers, each of which provides a separate information channel. See also: Fiber bundle; Optical cable assembly.

Multimode fiber. A fiber that supports passage of more than one mode. The number of modes in a fiber is defined by boundary conditions and Maxwell's equations.

Multimode distortion. See: Modal dispersion.

Noise currents. Any noise voltage or current that prevents precise measurements. Dark current and thermal noise (from amplifiers and resistors) contribute to noise in fiber optic systems.

Noise equivalent power (NEP). The rms value of optical power required to produce an rms signal-to-noise ratio of 1; and indication of noise level which defines the minimum detectable signal level.

Numerical aperture (NA). A characteristic parameter of any given fiber's light gathering capability. Defined by the maximum angle of light (relative to the fiber's axis,) which is delivered through the fiber. The sine of the vertex angle of the largest cone of meridional rays that can enter or leave an optical system, or element, multiplied by the refractive index of the medium in which the vertex of the cone is located.

$$\text{NA} = \left(\eta_1^{\,2} - \eta_2^{\,2}\right)^{0.5}$$

where η_1 is the refractive index of core, and η_2 the index of cladding, or

$$\text{NA} = \eta_o \ \sin^{-1}\theta$$

where the θ is the half angle of the cone and η_o is the refractive index in respective medium. See also: Acceptance angle; Critical angle.

Optical cable assembly. Generally, an optical cable that has been terminated with connectors on both ends and is ready for installation.

Optical filter. An element that selectively transmits certain optical wavelengths and blocks a range of wavelengths.

Optical time domain reflectometry (OTDR). A method for characterizing a fiber wherein an optical pulse is transmitted through the fiber and the resulting backscatter and reflections are measured as a function of time. Useful in estimating attenuation coefficient as a function of distance and identifying defects and other localized losses. See also: Backscattering; Rayleigh scattering; Scattering.

Optical waveguide. Any structure having the ability to guide the flow of radiant energy along a path parallel to its axis and, at the same time, to contain the energy within or adjacent to its surface.

Ordinary ray. A ray that has isotopic speed in a doubly refracting crystal. It obeys Snell's law upon refraction at the crystal surface. See also: Birefringence.

Output power. Radiant power, expressed in watts.

Peak wavelength. The wavelength at which the optical power of a source is at maximum.

Photon. A quantum of electromagnetic energy. The energy of a photon is equal to h * ν, where h is Planck's constant and ν is the optical frequency.

OCEAN CHIPS
Океан Электроники
Поставка электронных компонентов

Компания «Океан Электроники» предлагает заключение долгосрочных отношений при поставках импортных электронных компонентов на взаимовыгодных условиях!

Наши преимущества:

- Поставка оригинальных импортных электронных компонентов напрямую с производств Америки, Европы и Азии, а так же с крупнейших складов мира;
- Широкая линейка поставок активных и пассивных импортных электронных компонентов (более 30 млн. наименований);
- Поставка сложных, дефицитных, либо снятых с производства позиций;
- Оперативные сроки поставки под заказ (от 5 рабочих дней);
- Экспресс доставка в любую точку России;
- Помощь Конструкторского Отдела и консультации квалифицированных инженеров;
- Техническая поддержка проекта, помощь в подборе аналогов, поставка прототипов;
- Поставка электронных компонентов под контролем ВП;
- Система менеджмента качества сертифицирована по Международному стандарту ISO 9001;
- При необходимости вся продукция военного и аэрокосмического назначения проходит испытания и сертификацию в лаборатории (по согласованию с заказчиком);
- Поставка специализированных компонентов военного и аэрокосмического уровня качества (Xilinx, Altera, Analog Devices, Intersil, Interpoint, Microsemi, Actel, Aeroflex, Peregrine, VPT, Syfer, Eurofarad, Texas Instruments, MS Kennedy, Miteq, Cobham, E2V, MA-COM, Hittite, Mini-Circuits, General Dynamics и др.);

Компания «Океан Электроники» является официальным дистрибьютором и эксклюзивным представителем в России одного из крупнейших производителей разъемов военного и аэрокосмического назначения **«JONHON»**, а так же официальным дистрибьютором и эксклюзивным представителем в России производителя высокотехнологичных и надежных решений для передачи СВЧ сигналов **«FORSTAR»**.

AVIC JONHON

«JONHON» (основан в 1970 г.)

Разъемы специального, военного и аэрокосмического назначения:

(Применяются в военной, авиационной, аэрокосмической, морской, железнодорожной, горно- и нефтедобывающей отраслях промышленности)

«FORSTAR» (основан в 1998 г.)

ВЧ соединители, коаксиальные кабели, кабельные сборки и микроволновые компоненты:

(Применяются в телекоммуникациях гражданского и специального назначения, в средствах связи, РЛС, а так же военной, авиационной и аэрокосмической отраслях промышленности).

FORSTAR®

Телефон: 8 (812) 309-75-97 (многоканальный)
Факс: 8 (812) 320-03-32
Электронная почта: ocean@oceanchips.ru
Web: http://oceanchips.ru/
Адрес: 198099, г. Санкт-Петербург, ул. Калинина, д. 2, корп. 4, лит. А