PIC16(L)F1784/6/7

28-Pin 8-Bit Advanced Analog Flash Microcontroller

High-Performance RISC CPU:

- Only 49 Instructions
- Operating Speed:
  - DC – 32 MHz clock input
  - DC – 125 ns instruction cycle
- Interrupt Capability with Automatic Context Saving
- 16-Level Deep Hardware Stack with optional Overflow/Underflow Reset
- Direct, Indirect and Relative Addressing modes:
- Two full 16-bit File Select Registers (FSRs)
  - FSRs can read program and data memory

Memory Features:

- Up to 8 KW Flash Program Memory:
  - Self-programmable under software control
  - Programmable code protection
  - Programmable write protection
- 256 Bytes of Data EEPROM
- Up to 1024 Bytes of RAM

High-Performance PWM Controller:

- Three Programmable Switch Mode Controller (PSMC) modules:
  - Digital and/or analog feedback control of PWM frequency and pulse begin/end times
  - 16-bit Period, Duty Cycle and Phase
  - 16 ns clock resolution
  - Supports Single PWM, Complementary, Push-Pull and 3-phase modes of operation
  - Dead-band control with 8-bit counter
  - Auto-shutdown and restart
  - Leading and falling edge blanking
  - Burst mode

Extreme Low-Power Management PIC16LF1784/6/7 with XLP:

- Sleep mode: 50 nA @ 1.8V, typical
- Watchdog Timer: 500 nA @ 1.8V, typical
- Timer1 Oscillator: 500 nA @ 32 kHz
- Operating Current:
  - 8 μA @ 32 kHz, 1.8V, typical
  - 32 μA/MHz @ 1.8V, typical

Analog Peripheral Features:

- Analog-to-Digital Converter (ADC):
  - Fully differential 12-bit converter
  - Up to 75 ksps conversion rate
  - 11 single-ended channels
  - 5 differential channels
  - Positive and negative reference selection
- 8-bit Digital-to-Analog Converter (DAC):
  - Output available externally
  - Positive and negative reference selection
  - Internal connections to comparators, op amps, Fixed Voltage Reference (FVR) and ADC
- Four High-Speed Comparators:
  - 50 ns response time @ V_{DD} = 5V
  - Rail-to-rail inputs
  - Software selectable hysteresis
  - Internal connection to op amps, FVR and DAC
- Up to three Operational Amplifiers:
  - Rail-to-rail inputs/outputs
  - High/Low selectable Gain Bandwidth Product
  - Internal connection to DAC and FVR
- Fixed Voltage Reference (FVR):
  - 1.024V, 2.048V and 4.096V output levels
  - Internal connection to ADC, comparators and DAC

I/O Features:

- Up to 36 I/O Pins and 1 Input-only Pin:
- High Current Sink/Source for LED Drivers
- Individually Programmable Interrupt-on-Change Pins
- Individually Programmable Weak Pull-Ups
- Individual Input Level Selection
- Individually Programmable Slew Rate Control
- Individually Programmable Open Drain Outputs

© 2012-2014 Microchip Technology Inc.

Digital Peripheral Features:

- Timer0: 8-Bit Timer/Counter with 8-Bit Programmable Prescaler
- Enhanced Timer1:
  - 16-bit timer/counter with prescaler
  - External Gate Input mode
  - Dedicated low-power 32 kHz oscillator driver
- Timer2: 8-Bit Timer/Counter with 8-Bit Period Register, Prescaler and Postscaler
- Two Capture/Compare/PWM modules (CCP):
  - 16-bit capture, maximum resolution 12.5 ns
  - 16-bit compare, max resolution 31.25 ns
  - 10-bit PWM, max frequency 32 kHz
- Master Synchronous Serial Port (SSP) with SPI and I^2C™ with:
  - 7-bit address masking
  - SMBus/PMBus™ compatibility
- Enhanced Universal Synchronous Asynchronous Receiver Transmitter (EUSART):
  - RS-232, RS-485 and LIN compatible
  - Auto-baud detect
  - Auto-wake-up on start

Oscillator Features:

- Operate up to 32 MHz from Precision Internal Oscillator:
  - Factory calibrated to ±1%, typical
  - Software selectable frequency range from 32 MHz to 31 kHz
- 31 kHz Low-Power Internal Oscillator
- 32.768 kHz Timer1 Oscillator:
  - Available as system clock
  - Low-power RTC
- External Oscillator Block with:
  - 4 crystal/resonator modes up to 32 MHz using 4x PLL
  - 3 external clock modes up to 32 MHz
- 4x Phase-Locked Loop (PLL)
- Fail-Safe Clock Monitor:
  - Detect and recover from external oscillator failure
- Two-Speed Start-up:
  - Minimize latency between code execution and external oscillator start-up

General Microcontroller Features:

- Power-Saving Sleep mode
- Power-on Reset (POR)
- Power-up Timer (PWRT)
- Oscillator Start-up Timer (OST)
- Brown-out Reset (BOR) with Selectable Trip Point
- Extended Watchdog Timer (WDT)
- In-Circuit Serial Programming™ (ICSP™)
- In-Circuit Debug (ICD)
- Enhanced Low-Voltage Programming (LVP)
- Operating Voltage Range:
  - 1.8V to 3.6V (PIC16LF1784/6/7)
  - 2.3V to 5.5V (PIC16F1784/6/7)

© 2012-2014 Microchip Technology Inc.

PIC16(L)F178X Family Types

Device	Data Sheet Index	Program Memory Flash (words)	Data EEPROM (bytes)	Data SRAM (bytes)	I/O's(2)	12-bit ADC (ch)	Comparators	Operational Amplifiers	DAC (8/5-bit)	Timers (8/16-bit)	Programmable Switch Mode Controllers (PSMC)	CCP	EUSART	MSSP (I^2C™/SPI)	Debug(1)	XLP
PIC16(L)F1782	(1)	2048	256	256	25	11	3	2	1/0	2/1	2	2	1	1	I	Y
PIC16(L)F1783	(1)	4096	256	512	25	11	3	2	1/0	2/1	2	2	1	1	I	Y
PIC16(L)F1784	(2)	4096	256	512	36	15	4	3	1/0	2/1	3	3	1	1	I	Y
PIC16(L)F1786	(2)	8192	256	1024	25	11	4	2	1/0	2/1	3	3	1	1	I	Y
PIC16(L)F1787	(2)	8192	256	1024	36	15	4	3	1/0	2/1	3	3	1	1	I	Y
PIC16(L)F1788	(3)	16384	256	2048	25	11	4	2	1/3	2/1	4	3	1	1	I	Y
PIC16(L)F1789	(3)	16384	256	2048	36	15	4	3	1/3	2/1	4	3	1	1	I	Y

Note 1: I - Debugging, Integrated on Chip; H - Debugging, available using Debug Header.
2: One pin is input-only.

Data Sheet Index: (Unshaded devices are described in this document.)

1: DS40001579 PIC16(L)F1782/3 Data Sheet, 28-Pin Flash, 8-bit Advanced Analog MCUs.
2: DS40001637 PIC16(L)F1784/6/7 Data Sheet, 28/40/44-Pin Flash, 8-bit Advanced Analog MCUs.
3: DS40001675 PIC16(L)F1788/9 Data Sheet, 28/40/44-Pin Flash, 8-bit Advanced Analog MCUs.

Note: For other small form-factor package availability and marking information, please visit **http://www.microchip.com/packaging** or contact your local sales office.

Pin Diagram – 28-Pin SPDIP, SOIC, SSOP

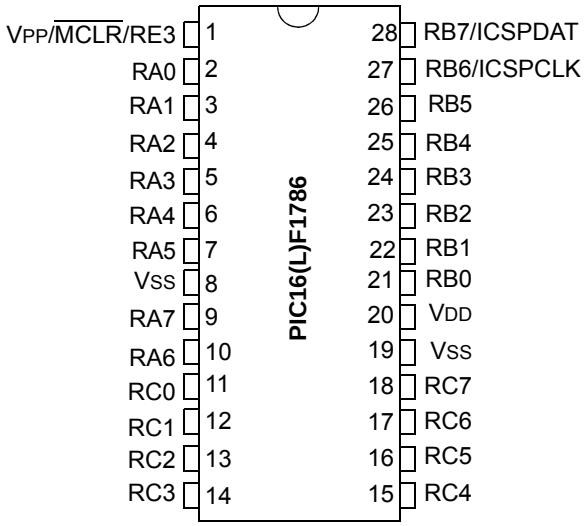

Note: See Table 1 for the location of all peripheral functions.

Pin Diagram – 28-Pin QFN

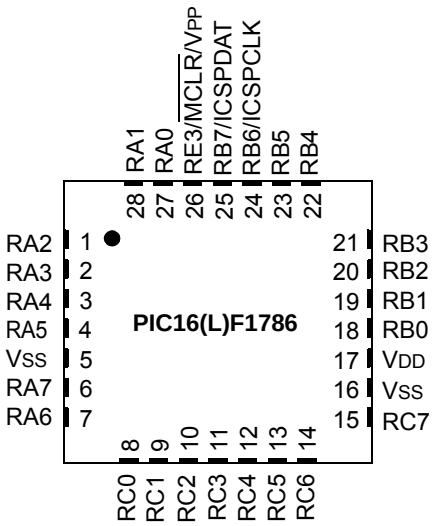

Note: See Table 1 for the location of all peripheral functions.

© 2012-2014 Microchip Technology Inc.

Pin Diagram – 40-Pin PDIP

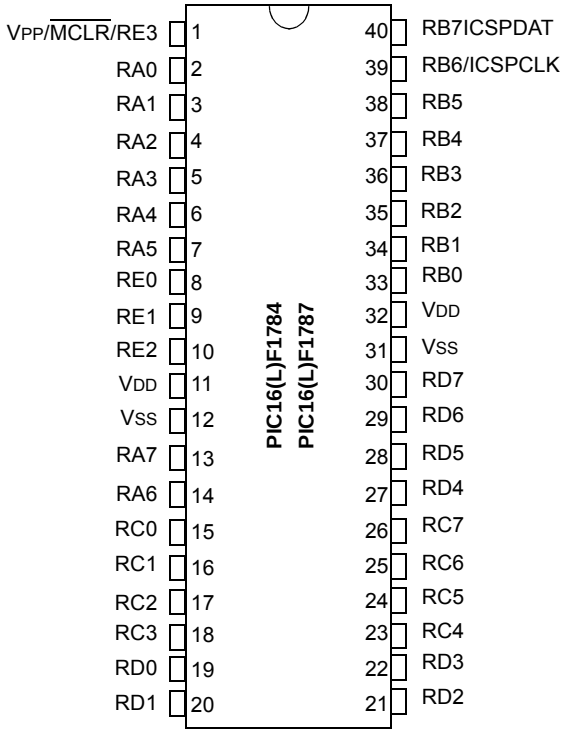

Note: See Table 2 for the location of all peripheral functions.

Pin Diagram – 40-Pin UQFN (5x5)

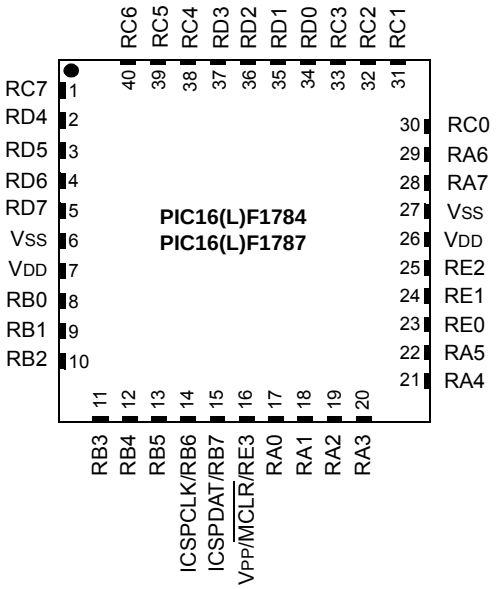

Note: See Table 2 for the location of all peripheral functions.

© 2012-2014 Microchip Technology Inc.

Pin Diagram – 44-Pin QFN

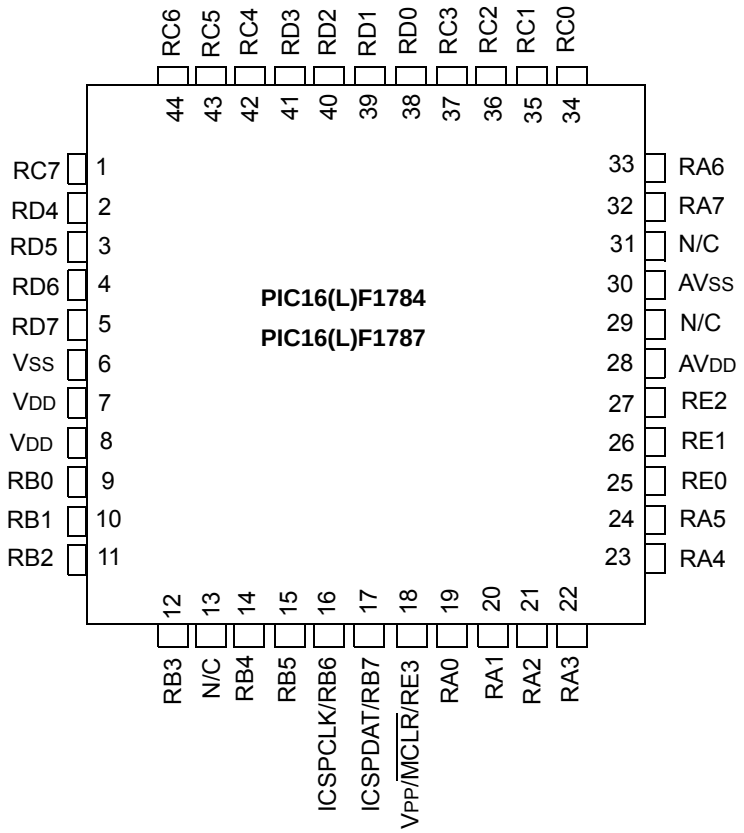

Note: See Table 2 for the location of all peripheral functions.

Pin Diagram – 44-Pin TQFP

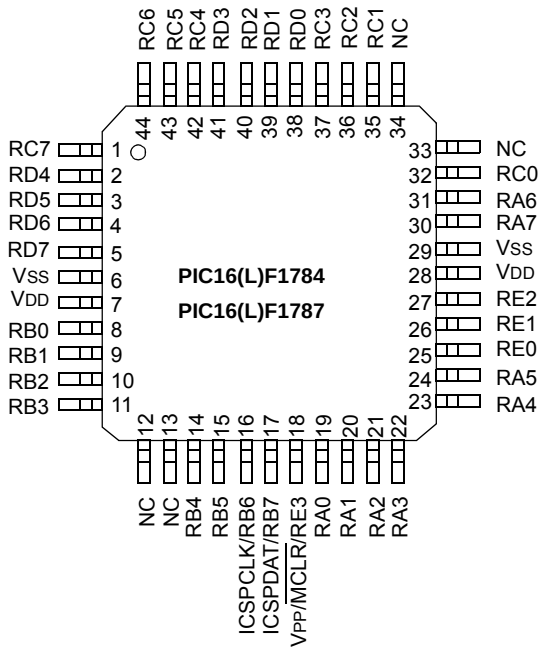

Note: See Table 2 for the location of all peripheral functions.

© 2012-2014 Microchip Technology Inc.

PIN ALLOCATION TABLE

TABLE 1: 28-PIN ALLOCATION TABLE (PIC16(L)F1786)

I/O	28-Pin SPDIP, SOIC, SSOP	28-Pin QFN,	ADC	Reference	Comparator	Operation Amplifiers	8-bit DAC	Timers	PSMC	CCP	EUSART	MSSP	Interrupt	Pull-up	Basic
RA0	2	27	AN0	—	C1IN0- C2IN0- C3IN0- C4IN0-	—	—	—	—	—	—	—	IOC	Y	—
RA1	3	28	AN1	—	C1IN1- C2IN1- C3IN1- C4IN1-	OPA1OUT	—	—	—	—	—	—	IOC	Y	—
RA2	4	1	AN2	VREF- DAC1VREF-	C1IN0+ C2IN0+ C3IN0+ C4IN0+		DAC1OUT1	—	—	—	—	—	IOC	Y	—
RA3	5	2	AN3	VREF+ DAC1VREF+	C1IN1+	—	—	—	—	—	—	—	IOC	Y	—
RA4	6	3	—	—	C1OUT	OPA1IN+	—	T0CKI	—	—	—	—	IOC	Y	—
RA5	7	4	AN4	—	C2OUT	OPA1IN-	—	—	—	—	—	$\overline{SS}$	IOC	Y	—
RA6	10	7	—	—	C2OUT(1)	—	—	—	—	—	—	—	IOC	Y	VCAP OSC2 CLKOUT
RA7	9	6	—	—	—	—	—	—	PSMC1CLK PSMC2CLK PSMC3CLK	—	—	—	IOC	Y	OSC1 CLKIN
RB0	21	18	AN12	—	C2IN1+	—	—	—	PSMC1IN PSMC2IN PSMC3IN	CCP1(1)	—	—	INT IOC	Y	—
RB1	22	19	AN10	—	C1IN3- C2IN3- C3IN3- C4IN3-	OPA2OUT	—	—	—	—	—	—	IOC	Y	—
RB2	23	20	AN8	—	—	OPA2IN-	—	—	—	—	—	—	IOC	Y	CLKR
RB3	24	21	AN9	—	C1IN2- C2IN2- C3IN2-	OPA2IN+	—	—	—	CCP2(1)	—	—	IOC	Y	—
RB4	25	22	AN11	—	C3IN1+	—	—	—	—	—	—	—	IOC	Y	—
RB5	26	23	AN13	—	C4IN2- C3OUT	—	—	T1G	—	CCP3(1)	—	SDO(1)	IOC	Y	—
RB6	27	24	—	—	C4IN1+	—	—	—	—	—	TX(1) CK(1)	SDI(1) SDA(1)	IOC	Y	ICSPCLK

Note 1: Alternate pin function selected with the APFCON1 (Register 13-1) and APFCON2 (Register 13-2) registers.

© 2012-2014 Microchip Technology Inc.

TABLE 1: 28-PIN ALLOCATION TABLE (PIC16(L)F1786) (Continued)

I/O	28-Pin SPDIP, SOIC, SSOP	28-Pin QFN,	ADC	Reference	Comparator	Operation Amplifiers	8-bit DAC	Timers	PSMC	CCP	EUSART	MSSP	Interrupt	Pull-up	Basic
RB7	28	25	—	—	—	—	DAC1OUT2	—	—	—	RX(1) DT(1)	SCK(1) SCL(1)	IOC	Y	ICSPDAT
RC0	11	8	—	—	—	—	—	T1OSO T1CKI	PSMC1A	—	—	—	IOC	Y	—
RC1	12	9	—	—	—	—	—	T1OSI	PSMC1B	CCP2	—	—	IOC	Y	—
RC2	13	10	—	—	—	—	—	—	PSMC1C PSMC3B	CCP1	—	—	IOC	Y	—
RC3	14	11	—	—	—	—	—	—	PSMC1D	—	—	SCK SCL	IOC	Y	—
RC4	15	12	—	—	—	—	—	—	PSMC1E	—	—	SDI SDA	IOC	Y	—
RC5	16	13	—	—	—	—	—	—	PSMC1F PSMC3A	—	—	SDO	IOC	Y	—
RC6	17	14	—	—	—	—	—	—	PSMC2A	CCP3	TX CK	—	IOC	Y	—
RC7	18	15	—	—	C4OUT	—	—	—	PSMC2B	—	RX DT	—	IOC	Y	—
RE3	1	26	—	—	—	—	—	—	—	—	—	—	IOC	Y	$\overline{MCLR}$ VPP
VDD	20	17	—	—	—	—	—	—	—	—	—	—	—	—	VDD
VSS	8, 19	5, 16	—	—	—	—	—	—	—	—	—	—	—	—	VSS

Note 1: Alternate pin function selected with the APFCON1 (Register 13-1) and APFCON2 (Register 13-2) registers.

© 2012-2014 Microchip Technology Inc.

TABLE 2: 40/44-PIN ALLOCATION TABLE (PIC16(L)F1784/7)

I/O	40-Pin PDIP	40-Pin UQFN	44-Pin TQFP	44-Pin QFN	ADC	Reference	Comparator	Op Amps	8-bit DAC	Timers	PSMC	CCP	EUSART	MSSP	Interrupt	Pull-up	Basic
RA0	2	17	19	19	AN0	—	C1IN0- C2IN0- C3IN0- C4IN0-	—	—	—	—	—	—	—	IOC	Y	—
RA1	3	18	20	20	AN1	—	C1IN1- C2IN1- C3IN1- C4IN1-	OPA1OUT	—	—	—	—	—	—	IOC	Y	—
RA2	4	19	21	21	AN2	DAC1VREF- VREF-	C1IN0+ C2IN0+ C3IN0+ C4IN0+		DAC1OUT1	—	—	—	—	—	IOC	Y	—
RA3	5	20	22	22	AN3	DAC1VREF+ VREF+	C1IN1+	—	—	—	—	—	—	—	IOC	Y	—
RA4	6	21	23	23	—	—	C1OUT	OPA1IN+	—	T0CKI	—	—	—	—	IOC	Y	—
RA5	7	22	24	24	AN4	—	C2OUT	OPA1IN-	—	—	—	—	—	$\overline{SS}$	IOC	Y	—
RA6	14	29	31	33	—	—	C2OUT(1)	—	—	—	—	—	—	—	IOC	Y	VCAP CLKOUT OSC2
RA7	13	28	30	32	—	—	—	—	—	—	PSMC1CLK PSMC2CLK PSMC3CLK	—	—	—	IOC	Y	CLKIN OSC1
RB0	33	8	8	9	AN12	—	C2IN1+	—	—	—	PSMC1IN PSMC2IN PSMC3IN	CCP1(1)	—	—	INT IOC	Y	—
RB1	34	9	9	10	AN10	—	C1IN3- C2IN3- C3IN3- C4IN3-	OPA2OUT	—	—	—	—	—	—	IOC	Y	—
RB2	35	10	10	11	AN8	—	—	OPA2IN-	—	—	—	—	—	—	IOC	Y	CLKR
RB3	36	11	11	12	AN9	—	C1IN2- C2IN2- C3IN2-	OPA2IN+	—	—	—	CCP2(1)	—	—	IOC	Y	—
RB4	37	12	14	14	AN11	—	C3IN1+	—	—	—	—	—	—	—	IOC	Y	—
RB5	38	13	15	15	AN13	—	C4IN2-	—	—	T1G	—	CCP3(1)	—	SDO(1)	IOC	Y	—
RB6	39	14	16	16	—	—	C4IN1+	—	—	—	—	—	TX(1) CK(1)	SDA(1) SDI(1)	IOC	Y	ICSPCLK
RB7	40	15	17	17	—	—	—	—	DAC1OUT2	—	—	—	RX(1) DT(1)	SCL(1) SCK(1)	IOC	Y	ICSPDAT
RC0	15	30	32	34	—	—	—	—	—	T1CKI T1OSO	PSMC1A	—	—	—	IOC	Y	—

Note 1: Alternate pin function selected with the APFCON1 (Register 13-1) and APFCON2 (Register 13-2) registers.

© 2012-2014 Microchip Technology Inc.

TABLE 2: 40/44-PIN ALLOCATION TABLE (PIC16(L)F1784/7) (Continued)

I/O	40-Pin PDIP	40-Pin UQFN	44-Pin TQFP	44-Pin QFN	ADC	Reference	Comparator	Op Amps	8-bit DAC	Timers	PSMC	CCP	EUSART	MSSP	Interrupt	Pull-up	Basic
RC1	16	31	35	35	—	—	—	—	—	T1OSI	PSMC1B	CCP2	—	—	IOC	Y	—
RC2	17	32	36	36	—	—	—	—	—	—	PSMC1C	CCP1	—	—	IOC	Y	
RC3	18	33	37	37	—	—	—	—	—	—	PSMC1D	—	—	SCL SCK	IOC	Y	—
RC4	23	38	42	42	—	—	—	—	—	—	PSMC1E	—	—	SDI SDA	IOC	Y	—
RC5	24	39	43	43	—	—	—	—	—	—	PSMC1F	—	—	SDO	IOC	Y	—
RC6	25	40	44	44	—	—	—	—	—	—	PSMC2A	—	TX CK	—	IOC	Y	—
RC7	26	1	1	1	—	—	—	—	—	—	PSMC2B	—	RX DT	—	IOC	Y	—
RD0	19	34	38	38	—	—	—	OPA3IN+	—	—	—	—	—	—	—	Y	—
RD1	20	35	39	39	AN21	—	C1IN4- C2IN4- C3IN4- C4IN4-	OPA3OUT	—	—	—	—	—	—	—	Y	—
RD2	21	36	40	40	—	—	—	OPA3IN-	—	—	—	—	—	—	—	Y	—
RD3	22	37	41	41	—	—	—	—	—	—	—	—	—	—	—	Y	
RD4	27	2	2	2	—	—	—	—	—	—	PSMC3F	—	—	—	—	Y	—
RD5	28	3	3	3	—	—	—	—	—	—	PSMC3E	—	—	—	—	Y	—
RD6	29	4	4	4	—	—	C3OUT	—	—	—	PSMC3D	—	—	—	—	Y	—
RD7	30	5	5	5	—	—	C4OUT	—	—	—	PSMC3C	—	—	—	—	Y	—
RE0	8	23	25	25	AN5	—	—	—	—	—	—	CCP3	—	—	—	Y	—
RE1	9	24	26	26	AN6	—	—	—	—	—	PSMC3B	—	—	—	—	Y	—
RE2	10	25	27	27	AN7	—	—	—	—	—	PSMC3A	—	—	—	—	Y	—
RE3	1	16	18	18	—	—	—	—	—	—	—	—	—	—	IOC	Y	$\overline{MCLR}$ V_{PP}
V_{DD}	11,32	7,26	7,28	7,8, 28	—	—	—	—	—	—	—	—	—	—	—	—	V_{DD}
Vss	12,31	6,27	6,29	6,30,	—	—	—	—	—	—	—	—	—	—	—	—	V_{SS}

Note 1: Alternate pin function selected with the APFCON1 (Register 13-1) and APFCON2 (Register 13-2) registers.

© 2012-2014 Microchip Technology Inc.

Table of Contents

1.0 Device Overview 14
2.0 Enhanced Mid-Range CPU 21
3.0 Memory Organization 23
4.0 Device Configuration 53
5.0 Resets 59
6.0 Oscillator Module 67
7.0 Reference Clock Module 85
8.0 Interrupts 88
9.0 Power-Down Mode (Sleep) 103
10.0 Low Dropout (LDO) Voltage Regulator 107
11.0 Watchdog Timer (WDT) 108
12.0 Date EEPROM and Flash Program Memory Control 112
13.0 I/O Ports 125
14.0 Interrupt-on-Change 156
15.0 Fixed Voltage Reference (FVR) 160
16.0 Temperature Indicator 163
17.0 Analog-to-Digital Converter (ADC) Module 165
18.0 Operational Amplifier (OPA) Module 180
19.0 Digital-to-Analog Converter (DAC) Module 183
20.0 Comparator Module 187
21.0 Timer0 Module 196
22.0 Timer1 Module 200
23.0 Timer2 Module 212
24.0 Programmable Switch Mode Control (PSMC) Module 214
25.0 Capture/Compare/PWM Module 271
26.0 Master Synchronous Serial Port (MSSP) Module 281
27.0 Enhanced Universal Synchronous Asynchronous Receiver Transmitter (EUSART) 335
28.0 In-Circuit Serial Programming™ (ICSP™) 364
29.0 Instruction Set Summary 366
30.0 Electrical Specifications 380
31.0 DC and AC Characteristics Graphs and Tables 412
32.0 Development Support 436
33.0 Packaging Information 440
Appendix A: Revision History 460
The Microchip Web Site 461
Customer Change Notification Service 461
Customer Support 461
Product Identification System 462

1.0 DEVICE OVERVIEW

The PIC16(L)F1784/6/7 are described within this data sheet. The block diagram of these devices are shown in Figure 1-1. The available peripherals are shown in Table 1-1, and the pin out descriptions are shown in Table 1-2.

TABLE 1-1: DEVICE PERIPHERAL SUMMARY

Peripheral		PIC16(L)F1782	PIC16(L)F1783	PIC16(L)F1784	PIC16(L)F1786	PIC16(L)F1787	PIC16(L)F1788	PIC16(L)F1789
Analog-to-Digital Converter (ADC)		●	●	●	●	●	●	●
Fixed Voltage Reference (FVR)		●	●	●	●	●	●	●
Reference Clock Module		●	●	●	●	●	●	●
Temperature Indicator		●	●	●	●	●	●	●
Capture/Compare/PWM (CCP/ECCP) Modules								
	CCP1	●	●	●	●	●	●	●
	CCP2	●	●	●	●	●	●	●
	CCP3			●	●	●	●	●
Comparators								
	C1	●	●	●	●	●	●	●
	C2	●	●	●	●	●	●	●
	C3	●	●	●	●	●	●	●
	C4			●	●	●	●	●
Digital-to-Analog Converter (DAC)								
	(8-bit DAC) D1	●	●	●	●	●	●	●
	(5-bit DAC) D2							●
	(5-bit DAC) D3							●
	(5-bit DAC) D4							●
Enhanced Universal Synchronous/Asynchronous Receiver/Transmitter (EUSART)								
	EUSART	●	●	●	●	●	●	●
Master Synchronous Serial Ports								
	MSSP	●	●	●	●	●	●	●
Op Amp								
	Op Amp 1	●	●	●	●	●	●	●
	Op Amp 2	●	●	●	●	●	●	●
	Op Amp 3			●		●		●
Programmable Switch Mode Controller (PSMC)								
	PSMC1	●	●	●	●	●	●	●
	PSMC2	●	●	●	●	●	●	●
	PSMC3			●	●	●	●	●
	PSMC4						●	●
Timers								
	Timer0	●	●	●	●	●	●	●
	Timer1	●	●	●	●	●	●	●
	Timer2	●	●	●	●	●	●	●

© 2012-2014 Microchip Technology Inc.

FIGURE 1-1: PIC16(L)F1784/6/7 BLOCK DIAGRAM

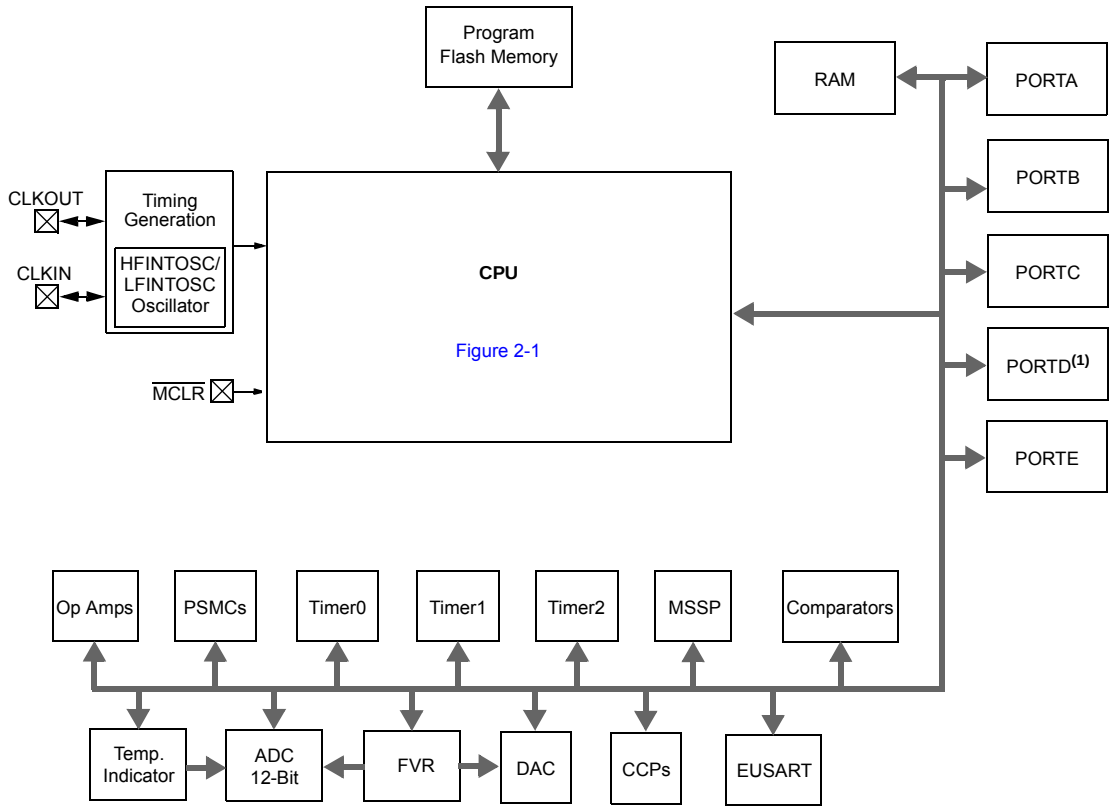

Note 1: PIC16(L)F1784/7 only.
2: See applicable chapters for more information on peripherals.

TABLE 1-2: PIC16(L)F1784/6/7 PINOUT DESCRIPTION

Name	Function	Input Type	Output Type	Description
RA0/AN0/C1IN0-/C2IN0-/C3IN0-/C4IN0-	RA0	TTL/ST	CMOS	General purpose I/O.
	AN0	AN	—	ADC Channel 0 input.
	C1IN0-	AN	—	Comparator C1 negative input.
	C2IN0-	AN	—	Comparator C2 negative input.
	C3IN0-	AN	—	Comparator C3 negative input.
	C4IN0-	AN	—	Comparator C4 negative input.
RA1/AN1/C1IN1-/C2IN1-/C3IN1-/C4IN1-/OPA1OUT	RA1	TTL/ST	CMOS	General purpose I/O.
	AN1	AN	—	ADC Channel 1 input.
	C1IN1-	AN	—	Comparator C1 negative input.
	C2IN1-	AN	—	Comparator C2 negative input.
	C3IN1-	AN	—	Comparator C3 negative input.
	C4IN1-	AN	—	Comparator C4 negative input.
	OPA1OUT	—	AN	Operational Amplifier 1 output.
RA2/AN2/C1IN0+/C2IN0+/C3IN0+/C4IN0+/DAC1OUT1/VREF-/DAC1VREF-/OPA1IN-	RA2	TTL/ST	CMOS	General purpose I/O.
	AN2	AN	—	ADC Channel 2 input.
	C1IN0+	AN	—	Comparator C1 positive input.
	C2IN0+	AN	—	Comparator C2 positive input.
	C3IN0+	AN	—	Comparator C3 positive input.
	C4IN0+	AN	—	Comparator C4 positive input.
	DAC1OUT1	—	AN	Digital-to-Analog Converter output.
	VREF-	AN	—	ADC Negative Voltage Reference input.
	DAC1VREF-	AN	—	Digital-to-Analog Converter negative reference.
RA3/AN3/VREF+/C1IN1+/DAC1VREF+	RA3	TTL/ST	CMOS	General purpose I/O.
	AN3	AN	—	ADC Channel 3 input.
	VREF+	AN	—	ADC Voltage Reference input.
	C1IN1+	AN	—	Comparator C1 positive input.
	DAC1VREF+	AN	—	Digital-to-Analog Converter positive reference.
RA4/C1OUT/OPA1IN+/T0CKI	RA4	TTL/ST	CMOS	General purpose I/O.
	C1OUT	—	CMOS	Comparator C1 output.
	OPA1IN+	AN	—	Operational Amplifier 1 non-inverting input.
	T0CKI	ST	—	Timer0 clock input.
RA5/AN4/C2OUT(1)/OPA1IN-/$\overline{SS}$	RA5	TTL/ST	CMOS	General purpose I/O.
	AN4	AN	—	ADC Channel 4 input.
	C2OUT	—	CMOS	Comparator C2 output.
	OPA1IN-	AN	—	Operational Amplifier 1 inverting input.
	$\overline{SS}$	ST	—	Slave Select input.

Legend: AN = Analog input or output; CMOS = CMOS compatible input or output; OD = Open Drain; TTL = TTL compatible input; ST = Schmitt Trigger input with CMOS levels; I^{2}C™ = Schmitt Trigger input with I^{2}C levels; HV = High Voltage; XTAL = Crystal

Note 1: Pin functions can be assigned to one of two locations via software. See ***Register 13-1***.
2: All pins have interrupt-on-change functionality.
3: PIC16(L)F1784/7 only.
4: PIC16(L)F1786 only.

© 2012-2014 Microchip Technology Inc.

TABLE 1-2: PIC16(L)F1784/6/7 PINOUT DESCRIPTION (CONTINUED)

Name	Function	Input Type	Output Type	Description
RA6/C2OUT(1)/OSC2/CLKOUT/VCAP	RA6	TTL/ST	CMOS	General purpose I/O.
	C2OUT	—	CMOS	Comparator C2 output.
	OSC2	—	XTAL	Crystal/Resonator (LP, XT, HS modes).
	CLKOUT	—	CMOS	FOSC/4 output.
	VCAP	Power	Power	Filter capacitor for Voltage Regulator.
RA7/PSMC1CLK/PSMC2CLK/PSMC3CLK/OSC1/CLKIN	RA7	TTL/ST	CMOS	General purpose I/O.
	PSMC1CLK	ST	—	PSMC1 clock input.
	PSMC2CLK	ST	—	PSMC2 clock input.
	PSMC3CLK	ST	—	PSMC3 clock input.
	OSC1	—	XTAL	Crystal/Resonator (LP, XT, HS modes).
	CLKIN	st	—	External clock input (EC mode).
RB0/AN12/C2IN1+/PSMC1IN/PSMC2IN/PSMC3IN/CCP1(1)/INT	RB0	TTL/ST	CMOS	General purpose I/O.
	AN12	AN	—	ADC Channel 12 input.
	C2IN1+	AN	—	Comparator C2 positive input.
	PSMC1IN	ST	—	PSMC1 Event Trigger input.
	PSMC2IN	ST	—	PSMC2 Event Trigger input.
	PSMC3IN	ST	—	PSMC3 Event Trigger input.
	CCP1	ST	CMOS	Capture/Compare/PWM1.
	INT	ST	—	External interrupt.
RB1/AN10/C1IN3-/C2IN3-/C3IN3-/C4IN3-/OPA2OUT	RB1	TTL/ST	CMOS	General purpose I/O.
	AN10	AN	—	ADC Channel 10 input.
	C1IN3-	AN	—	Comparator C1 negative input.
	C2IN3-	AN	—	Comparator C2 negative input.
	C3IN3-	AN	—	Comparator C3 negative input.
	C4IN3-	AN	—	Comparator C4 negative input.
	OPA2OUT	—	AN	Operational Amplifier 2 output.
RB2/AN8/OPA2IN-/CLKR	RB2	TTL/ST	CMOS	General purpose I/O.
	AN8	AN	—	ADC Channel 8 input.
	OPA2IN-	AN	—	Operational Amplifier 2 inverting input.
	CLKR	—	CMOS	Clock output.
RB3/AN9/C1IN2-/C2IN2-/C3IN2-/OPA2IN+/CCP2(1)	RB3	TTL/ST	CMOS	General purpose I/O.
	AN9	AN	—	ADC Channel 9 input.
	C1IN2-	AN	—	Comparator C1 negative input.
	C2IN2-	AN	—	Comparator C2 negative input.
	C3IN2-	AN	—	Comparator C3 negative input.
	OPA2IN+	AN	—	Operational Amplifier 2 non-inverting input.
	CCP2	ST	CMOS	Capture/Compare/PWM2.
RB4/AN11/C3IN1+	RB4	TTL/ST	CMOS	General purpose I/O.
	AN11	AN	—	ADC Channel 11 input.
	C3IN1+	AN	—	Comparator C3 positive input.

Legend: AN = Analog input or output; CMOS = CMOS compatible input or output; OD = Open Drain; TTL = TTL compatible input; ST = Schmitt Trigger input with CMOS levels; I^{2}C™ = Schmitt Trigger input with I^{2}C levels; HV = High Voltage; XTAL = Crystal

Note 1: Pin functions can be assigned to one of two locations via software. See ***Register 13-1***.
2: All pins have interrupt-on-change functionality.
3: PIC16(L)F1784/7 only.
4: PIC16(L)F1786 only.

TABLE 1-2: PIC16(L)F1784/6/7 PINOUT DESCRIPTION (CONTINUED)

Name	Function	Input Type	Output Type	Description
RB5/AN13/C4IN2-/T1G/CCP3(1) SDO(1)	RB5	TTL/ST	CMOS	General purpose I/O.
	AN13	AN	—	ADC Channel 13 input.
	C4IN2-	AN	—	Comparator C4 negative input.
	T1G	ST	—	Timer1 gate input.
	CCP3	ST	CMOS	Capture/Compare/PWM3.
	SDO	—	CMOS	SPI data output.
RB6/C4IN1+/TX(1)/CK(1)/SDI(1)/ SDA(1)/ICSPCLK	RB6	TTL/ST	CMOS	General purpose I/O.
	C4IN1+	AN	—	Comparator C4 positive input.
	TX	—	CMOS	EUSART asynchronous transmit.
	CK	ST	CMOS	EUSART synchronous clock.
	SDI	ST	—	SPI data input.
	SDA	I^2C	OD	I^2C™ data input/output.
	ICSPCLK	ST	—	Serial Programming Clock.
RB7/DAC1OUT2/RX(1)/DT(1)/ SCK(1)/SCL(1)/ICSPDAT	RB7	TTL/ST	CMOS	General purpose I/O.
	DAC1OUT2	—	AN	Voltage Reference output.
	RX	ST	—	EUSART asynchronous input.
	DT	ST	CMOS	EUSART synchronous data.
	SCK	ST	CMOS	SPI clock.
	SCL	I^2C	OD	I^2C™ clock.
	ICSPDAT	ST	CMOS	ICSP™ Data I/O.
RC0/T1OSO/T1CKI/PSMC1A	RC0	TTL/ST	CMOS	General purpose I/O.
	T1OSO	XTAL	XTAL	Timer1 Oscillator Connection.
	T1CKI	ST	—	Timer1 clock input.
	PSMC1A	—	CMOS	PSMC1 output A.
RC1/T1OSI/PSMC1B/CCP2	RC1	TTL/ST	CMOS	General purpose I/O.
	T1OSI	XTAL	XTAL	Timer1 Oscillator Connection.
	PSMC1B	—	CMOS	PSMC1 output B.
	CCP2	ST	CMOS	Capture/Compare/PWM2.
RC2/PSMC1C/CCP1	RC2	TTL/ST	CMOS	General purpose I/O.
	PSMC1C	—	CMOS	PSMC1 output C.
	CCP1	ST	CMOS	Capture/Compare/PWM1.
RC3/PSMC1D/SCK(1)/SCL(1)	RC3	TTL/ST	CMOS	General purpose I/O.
	PSMC1D	—	CMOS	PSMC1 output D.
	SCK	ST	CMOS	SPI clock.
	SCL	I^2C	OD	I^2C™ clock.
RC4/PSMC1E/SDI(1)/SDA(1)	RC4	TTL/ST	CMOS	General purpose I/O.
	PSMC1E	—	CMOS	PSMC1 output E.
	SDI	ST	—	SPI data input.
	SDA	I^2C	OD	I^2C™ data input/output.

Legend: AN = Analog input or output; CMOS = CMOS compatible input or output; OD = Open Drain; TTL = TTL compatible input; ST = Schmitt Trigger input with CMOS levels; I^2C™ = Schmitt Trigger input with I^2C levels; HV = High Voltage; XTAL = Crystal

Note 1: Pin functions can be assigned to one of two locations via software. See ***Register 13-1***.
2: All pins have interrupt-on-change functionality.
3: PIC16(L)F1784/7 only.
4: PIC16(L)F1786 only.

© 2012-2014 Microchip Technology Inc.

TABLE 1-2: PIC16(L)F1784/6/7 PINOUT DESCRIPTION (CONTINUED)

Name	Function	Input Type	Output Type	Description
RC5/PSMC1F/SDO(1)	RC5	TTL/ST	CMOS	General purpose I/O.
	PSMC1F	—	CMOS	PSMC1 output F.
	SDO	—	CMOS	SPI data output.
RC6/PSMC2A/TX(1)/CK(1)	RC6	TTL/ST	CMOS	General purpose I/O.
	PSMC2A	—	CMOS	PSMC2 output A.
	TX	—	CMOS	EUSART asynchronous transmit.
	CK	ST	CMOS	EUSART synchronous clock.
RC7/PSMC2B/RX(1)/DT(1)/ C4OUT(4)	RC7	TTL/ST	CMOS	General purpose I/O.
	PSMC2B	—	CMOS	PSMC2 output B.
	RX	ST	—	EUSART asynchronous input.
	DT	ST	CMOS	EUSART synchronous data.
	C4OUT	—	CMOS	Comparator C4 output.
RD0(3)/OPA3IN+	RD0	TTL/ST	CMOS	General purpose I/O.
	OPA3IN+	AN	—	Operational Amplifier 3 non-inverting input.
RD1(3)/AN21/C1IN4-/C2IN4-/ C3IN4-/C4IN4-/OPA3OUT	RD1	TTL/ST	CMOS	General purpose I/O.
	AN21	AN	—	ADC Channel 21 input.
	C1IN4-	AN	—	Comparator C4 negative input.
	C2IN4-	AN	—	Comparator C4 negative input.
	C3IN4-	AN	—	Comparator C4 negative input.
	C4IN4-	AN	—	Comparator C4 negative input.
	OPA3OUT	—	AN	Operational Amplifier 3 output.
RD2(3)/OPA3IN-	RD2	TTL/ST	CMOS	General purpose I/O.
	OPA3IN-	AN	—	Operational Amplifier 3 inverting input.
RD3(3)	RD3	TTL/ST	CMOS	General purpose I/O.
RD4(3)/PSMC3F	RD4	TTL/ST	CMOS	General purpose I/O.
	PSMC3F	—	CMOS	PSMC3 output F.
RD5(3)/PSMC3E	RD5	TTL/ST	CMOS	General purpose I/O.
	PSMC3E	—	CMOS	PSMC3 output E.
RD6(3)/C3OUT/PSMC3D	RD6	TTL/ST	CMOS	General purpose I/O.
	C3OUT	—	CMOS	Comparator C3 output.
	PSMC3D	—	CMOS	PSMC3 output D.
RD7(3)/C4OUT/PSMC3C	RD6	TTL/ST	CMOS	General purpose I/O.
	C4OUT	—	CMOS	Comparator C4 output.
	PSMC3C	—	CMOS	PSMC3 output C.
RE0(3)/AN5/CCP3(1)	RE0	TTL/ST	—	General purpose input.
	AN5	AN	—	ADC Channel 5 input.
	CCP3	ST	CMOS	Capture/Compare/PWM3.
RE1(3)/AN6/PSMC3B	RE1	TTL/ST	CMOS	General purpose I/O.
	AN6	AN	—	ADC Channel 6 input.
	PSMC3B	—	CMOS	PSMC3 output B.

Legend: AN = Analog input or output; CMOS = CMOS compatible input or output; OD = Open Drain; TTL = TTL compatible input; ST = Schmitt Trigger input with CMOS levels; I^2C™ = Schmitt Trigger input with I^2C levels; HV = High Voltage; XTAL = Crystal

Note 1: Pin functions can be assigned to one of two locations via software. See ***Register 13-1***.
2: All pins have interrupt-on-change functionality.
3: PIC16(L)F1784/7 only.
4: PIC16(L)F1786 only.

TABLE 1-2: PIC16(L)F1784/6/7 PINOUT DESCRIPTION (CONTINUED)

Name	Function	Input Type	Output Type	Description
RE2(3)/AN7/PSMC3A	RE2	TTL/ST	CMOS	General purpose I/O.
	AN7	AN	—	ADC Channel 7 input.
	PSMC3A	—	CMOS	PSMC3 output A.
RE3/$\overline{\text{MCLR}}$/VPP	RE3	TTL/ST	—	General purpose input.
	$\overline{\text{MCLR}}$	ST	—	Master Clear with internal pull-up.
	VPP	HV	—	Programming voltage.
VDD	VDD	Power	—	Positive supply.
VSS	VSS	Power	—	Ground reference.

Legend: AN = Analog input or output; CMOS = CMOS compatible input or output; OD = Open Drain; TTL = TTL compatible input; ST = Schmitt Trigger input with CMOS levels; I^2C™ = Schmitt Trigger input with I^2C levels; HV = High Voltage; XTAL = Crystal

Note 1: Pin functions can be assigned to one of two locations via software. See ***Register 13-1***.
2: All pins have interrupt-on-change functionality.
3: PIC16(L)F1784/7 only.
4: PIC16(L)F1786 only.

© 2012-2014 Microchip Technology Inc.

2.0 ENHANCED MID-RANGE CPU

This family of devices contain an enhanced mid-range 8-bit CPU core. The CPU has 49 instructions. Interrupt capability includes automatic context saving. The hardware stack is 16 levels deep and has Overflow and Underflow Reset capability. Direct, Indirect, and Relative addressing modes are available. Two File Select Registers (FSRs) provide the ability to read program and data memory.

- Automatic Interrupt Context Saving
- 16-level Stack with Overflow and Underflow
- File Select Registers
- Instruction Set

FIGURE 2-1: CORE BLOCK DIAGRAM

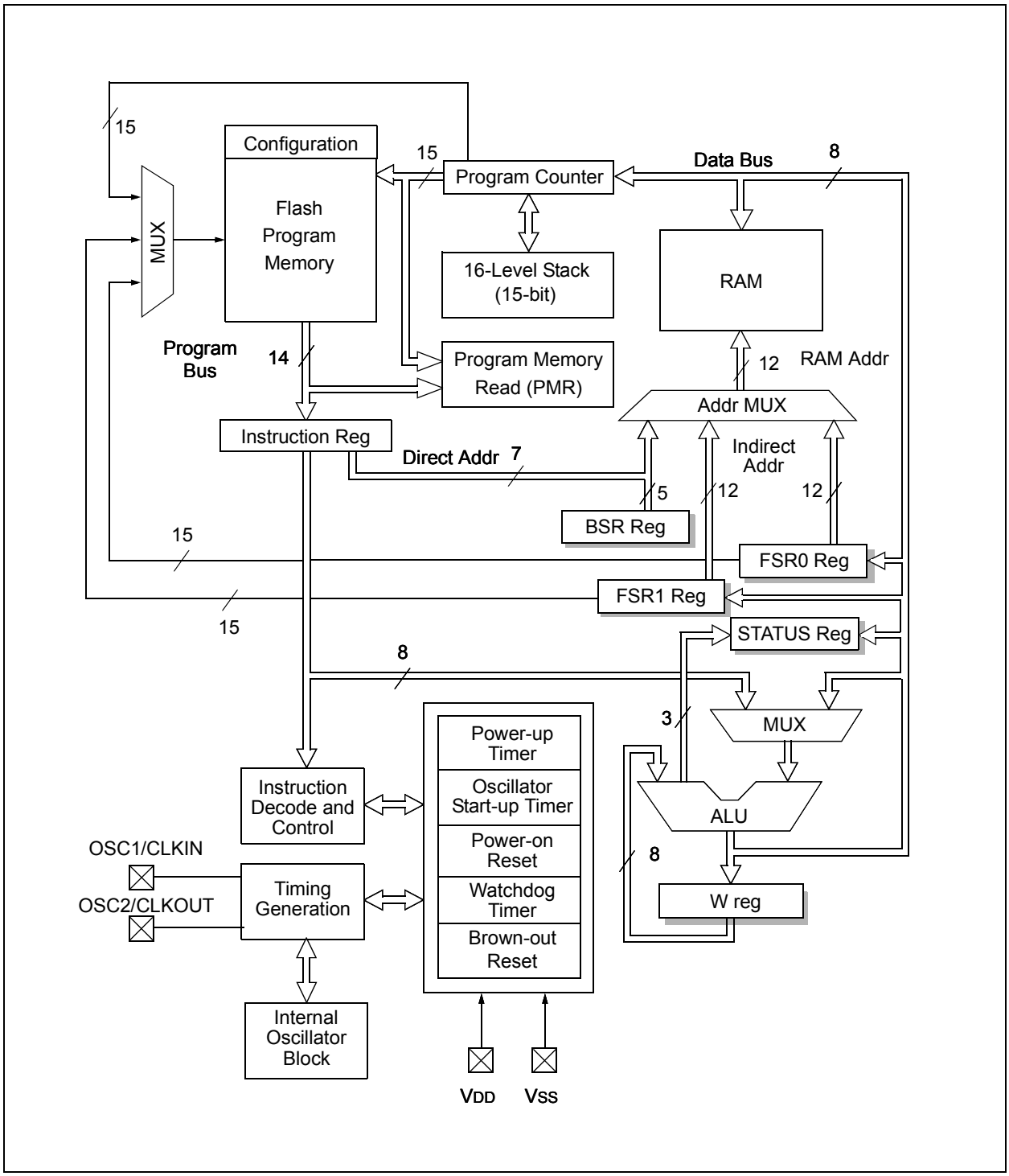

2.1 Automatic Interrupt Context Saving

During interrupts, certain registers are automatically saved in shadow registers and restored when returning from the interrupt. This saves stack space and user code. See **8.5 "Automatic Context Saving"**, for more information.

2.2 16-level Stack with Overflow and Underflow

These devices have an external stack memory 15 bits wide and 16 words deep. A Stack Overflow or Underflow will set the appropriate bit (STKOVF or STKUNF) in the PCON register, and if enabled will cause a software Reset. See **Section 3.5 "Stack"** for more details.

2.3 File Select Registers

There are two 16-bit File Select Registers (FSR). FSRs can access all file registers and program memory, which allows one Data Pointer for all memory. When an FSR points to program memory, there is one additional instruction cycle in instructions using INDF to allow the data to be fetched. General purpose memory can now also be addressed linearly, providing the ability to access contiguous data larger than 80 bytes. There are also new instructions to support the FSRs. See **Section 3.6 "Indirect Addressing"** for more details.

2.4 Instruction Set

There are 49 instructions for the enhanced mid-range CPU to support the features of the CPU. See **Section 29.0 "Instruction Set Summary"** for more details.

© 2012-2014 Microchip Technology Inc.

3.0 MEMORY ORGANIZATION

These devices contain the following types of memory:

- Program Memory
  - Configuration Words
  - Device ID
  - User ID
  - Flash Program Memory
- Data Memory
  - Core Registers
  - Special Function Registers
  - General Purpose RAM
  - Common RAM
- Data EEPROM memory(1)

Note 1: The Data EEPROM Memory and the method to access Flash memory through the EECON registers is described in **Section 12.0 "Data EEPROM and Flash Program Memory Control"**.

The following features are associated with access and control of program memory and data memory:

- PCL and PCLATH
- Stack
- Indirect Addressing

3.1 Program Memory Organization

The enhanced mid-range core has a 15-bit program counter capable of addressing a 32K x 14 program memory space. Table 3-1 shows the memory sizes implemented for the PIC16(L)F1784/6/7 family. Accessing a location above these boundaries will cause a wrap-around within the implemented memory space. The Reset vector is at 0000h and the interrupt vector is at 0004h (see Figures 3-1 and 3-2).

TABLE 3-1: DEVICE SIZES AND ADDRESSES

Device	Program Memory Space (Words)	Last Program Memory Address
PIC16(L)F1784	4,096	0FFFh
PIC16(L)F1786/7	8,192	1FFFh

FIGURE 3-1: PROGRAM MEMORY MAP AND STACK FOR PIC16(L)F1786/7

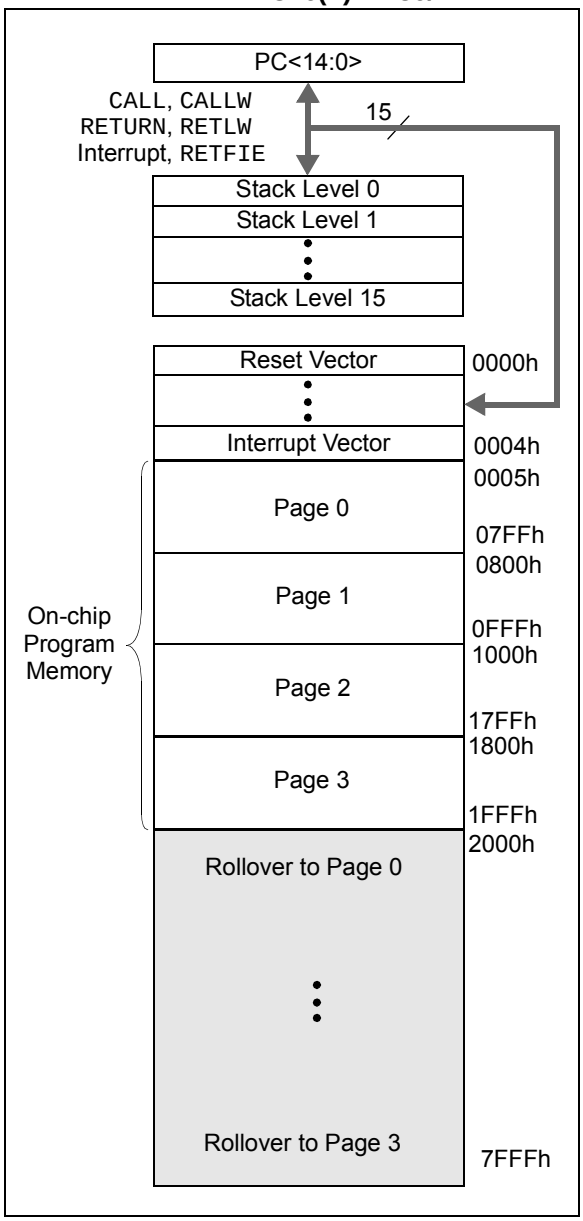

FIGURE 3-2: PROGRAM MEMORY MAP AND STACK FOR PIC16(L)F1784

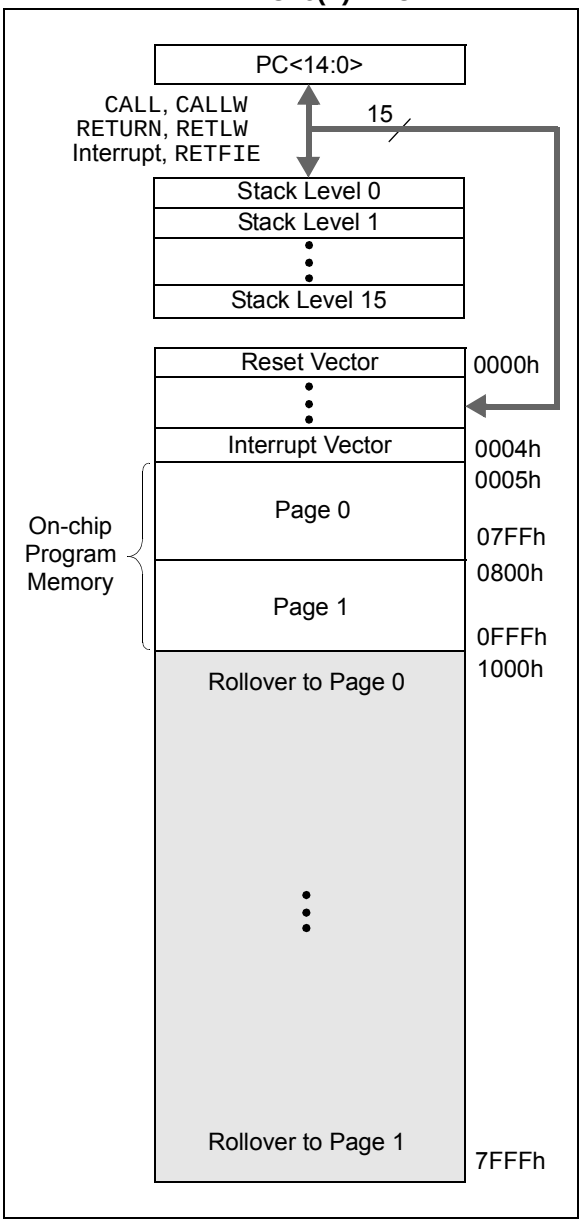

© 2012-2014 Microchip Technology Inc.

3.1.1 READING PROGRAM MEMORY AS DATA

There are two methods of accessing constants in program memory. The first method is to use tables of RETLW instructions. The second method is to set an FSR to point to the program memory.

3.1.1.1 RETLW Instruction

The RETLW instruction can be used to provide access to tables of constants. The recommended way to create such a table is shown in Example 3-1.

EXAMPLE 3-1: RETLW INSTRUCTION

```
constants
    BRW                 ;Add Index in W to
                        ;program counter to
                        ;select data
    RETLW DATA0         ;Index0 data
    RETLW DATA1         ;Index1 data
    RETLW DATA2
    RETLW DATA3


my_function
    ;… LOTS OF CODE…
    MOVLW       DATA_INDEX
    call constants
    ;… THE CONSTANT IS IN W
```

The BRW instruction makes this type of table very simple to implement. If your code must remain portable with previous generations of microcontrollers, then the BRW instruction is not available so the older table read method must be used.

3.1.1.2 Indirect Read with FSR

The program memory can be accessed as data by setting bit 7 of the FSRxH register and reading the matching INDFx register. The MOVIW instruction will place the lower 8 bits of the addressed word in the W register. Writes to the program memory cannot be performed via the INDF registers. Instructions that access the program memory via the FSR require one extra instruction cycle to complete. Example 3-2 demonstrates accessing the program memory via an FSR.

The high directive will set bit<7> if a label points to a location in program memory.

EXAMPLE 3-2: ACCESSING PROGRAM MEMORY VIA FSR

```
constants
    RETLW DATA0         ;Index0 data
    RETLW DATA1         ;Index1 data
    RETLW DATA2
    RETLW DATA3
my_function
    ;… LOTS OF CODE…
    MOVLW   LOW constants
    MOVWF   FSR1L
    MOVLW   HIGH constants
    MOVWF   FSR1H
    MOVIW   0[FSR1]
;THE PROGRAM MEMORY IS IN W
```

3.2 Data Memory Organization

The data memory is partitioned in 32 memory banks with 128 bytes in a bank. Each bank consists of (Figure 3-3):

- 12 core registers
- 20 Special Function Registers (SFR)
- Up to 80 bytes of General Purpose RAM (GPR)
- 16 bytes of common RAM

The active bank is selected by writing the bank number into the Bank Select Register (BSR). Unimplemented memory will read as '0'. All data memory can be accessed either directly (via instructions that use the file registers) or indirectly via the two File Select Registers (FSR). See **Section 3.6 "Indirect Addressing"** for more information.

Data memory uses a 12-bit address. The upper 5 bits of the address define the Bank address and the lower 7 bits select the registers/RAM in that bank.

3.2.1 CORE REGISTERS

The core registers contain the registers that directly affect the basic operation. The core registers occupy the first 12 addresses of every data memory bank (addresses x00h/x08h through x0Bh/x8Bh). These registers are listed below in Table 3-2. For detailed information, see Table 3-11.

TABLE 3-2: CORE REGISTERS

Addresses	BANKx
x00h or x80h	INDF0
x01h or x81h	INDF1
x02h or x82h	PCL
x03h or x83h	STATUS
x04h or x84h	FSR0L
x05h or x85h	FSR0H
x06h or x86h	FSR1L
x07h or x87h	FSR1H
x08h or x88h	BSR
x09h or x89h	WREG
x0Ah or x8Ah	PCLATH
x0Bh or x8Bh	INTCON

© 2012-2014 Microchip Technology Inc.

3.2.1.1 STATUS Register

The STATUS register, shown in Register 3-1, contains:

- the arithmetic status of the ALU
- the Reset status

The STATUS register can be the destination for any instruction, like any other register. If the STATUS register is the destination for an instruction that affects the Z, DC or C bits, then the write to these three bits is disabled. These bits are set or cleared according to the device logic. Furthermore, the $\overline{TO}$ and $\overline{PD}$ bits are not writable. Therefore, the result of an instruction with the STATUS register as destination may be different than intended.

For example, `CLRF STATUS` will clear the upper three bits and set the Z bit. This leaves the STATUS register as '`000u u1uu`' (where u = unchanged).

It is recommended, therefore, that only `BCF`, `BSF`, `SWAPF` and `MOVWF` instructions are used to alter the STATUS register, because these instructions do not affect any Status bits. For other instructions not affecting any Status bits (Refer to **Section 29.0 "Instruction Set Summary"**).

> **Note:** The C and DC bits operate as $\overline{Borrow}$ and $\overline{Digit\ Borrow}$ out bits, respectively, in subtraction.

3.3 Register Definitions: Status

REGISTER 3-1: STATUS: STATUS REGISTER

U-0	U-0	U-0	R-1/q	R-1/q	R/W-0/u	R/W-0/u	R/W-0/u
—	—	—	$\overline{TO}$	$\overline{PD}$	Z	DC(1)	C(1)
bit 7							bit 0

Legend:		
R = Readable bit	W = Writable bit	U = Unimplemented bit, read as '0'
u = Bit is unchanged	x = Bit is unknown	-n/n = Value at POR and BOR/Value at all other Resets
'1' = Bit is set	'0' = Bit is cleared	q = Value depends on condition

bit 7-5 **Unimplemented:** Read as '`0`'

bit 4 **$\overline{TO}$:** Time-Out bit
`1` = After power-up, `CLRWDT` instruction or `SLEEP` instruction
`0` = A WDT time-out occurred

bit 3 **$\overline{PD}$:** Power-Down bit
`1` = After power-up or by the `CLRWDT` instruction
`0` = By execution of the `SLEEP` instruction

bit 2 **Z:** Zero bit
`1` = The result of an arithmetic or logic operation is zero
`0` = The result of an arithmetic or logic operation is not zero

bit 1 **DC:** Digit Carry/$\overline{Digit\ Borrow}$ bit (`ADDWF`, `ADDLW`, `SUBLW`, `SUBWF` instructions)(1)
`1` = A carry-out from the 4th low-order bit of the result occurred
`0` = No carry-out from the 4th low-order bit of the result

bit 0 **C:** Carry/$\overline{Borrow}$ bit(1) (`ADDWF`, `ADDLW`, `SUBLW`, `SUBWF` instructions)(1)
`1` = A carry-out from the Most Significant bit of the result occurred
`0` = No carry-out from the Most Significant bit of the result occurred

Note 1: For $\overline{Borrow}$, the polarity is reversed. A subtraction is executed by adding the two's complement of the second operand.

3.3.1 SPECIAL FUNCTION REGISTER

The Special Function Registers (SFR) are registers used by the application to control the desired operation of peripheral functions in the device. The SFR occupies the 20 bytes after the core registers of every data memory bank (addresses x0Ch/x8Ch through x1Fh/x9Fh). The registers associated with the operation of each peripheral are described in the corresponding peripheral chapters of this data sheet.

3.3.2 GENERAL PURPOSE RAM

There are up to 80 bytes of General Purpose Registers (GPR) in each data memory bank. The GPR occupies the space immediately after the SFR of selected data memory banks. The number of banks selected depends on the total amount of GPR space available in the device.

3.3.2.1 Linear Access to GPR

The general purpose RAM can be accessed in a non-banked method via the FSRs. This can simplify access to large memory structures. See **Section 3.6.2 "Linear Data Memory"** for more information.

3.3.3 COMMON RAM

There are 16 bytes of common RAM accessible from all banks.

FIGURE 3-3: BANKED MEMORY PARTITIONING

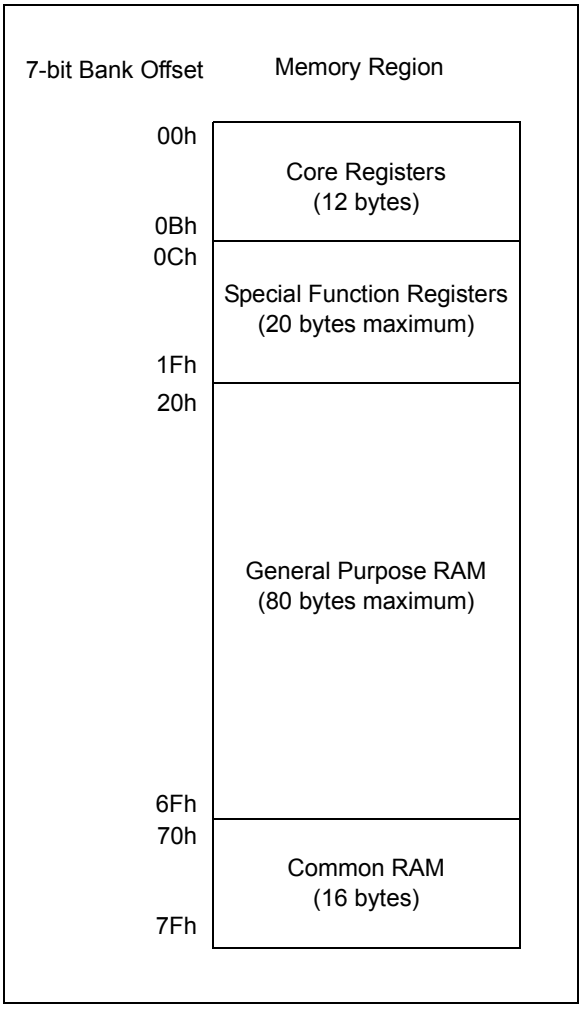

© 2012-2014 Microchip Technology Inc.

3.3.4 DEVICE MEMORY MAPS

The memory maps for Bank 0 through Bank 31 are shown in the tables in this section.

TABLE 3-3: PIC16(L)F1784 MEMORY MAP (BANKS 0-7)

	BANK 0		BANK 1		BANK 2		BANK 3		BANK 4		BANK 5		BANK 6		BANK 7
000h	Core Registers (Table 3-2)	080h	Core Registers (Table 3-2)	100h	Core Registers (Table 3-2)	180h	Core Registers (Table 3-2)	200h	Core Registers (Table 3-2)	280h	Core Registers (Table 3-2)	300h	Core Registers (Table 3-2)	380h	Core Registers (Table 3-2)
00Bh		08Bh		10Bh		18Bh		20Bh		28Bh		30Bh		38Bh	
00Ch	PORTA	08Ch	TRISA	10Ch	LATA	18Ch	ANSELA	20Ch	WPUA	28Ch	ODCONA	30Ch	SLRCONA	38Ch	INLVLA
00Dh	PORTB	08Dh	TRISB	10Dh	LATB	18Dh	ANSELB	20Dh	WPUB	28Dh	ODCONB	30Dh	SLRCONB	38Dh	INLVLB
00Eh	PORTC	08Eh	TRISC	10Eh	LATC	18Eh	—	20Eh	WPUC	28Eh	ODCONC	30Eh	SLRCONC	38Eh	INLVLC
00Fh	PORTD	08Fh	TRISD	10Fh	LATD	18Fh	ANSELD	20Fh	WPUD	28Fh	ODCOND	30Fh	SLRCOND	38Fh	INLVLD
010h	PORTE	090h	TRISE	110h	LATE	190h	ANSELE	210h	WPUE	290h	ODCONE	310h	SLRCONE	390h	INLVLE
011h	PIR1	091h	PIE1	111h	CM1CON0	191h	EEADRL	211h	SSP1BUF	291h	CCPR1L	311h	—	391h	IOCAP
012h	PIR2	092h	PIE2	112h	CM1CON1	192h	EEADRH	212h	SSP1ADD	292h	CCPR1H	312h	—	392h	IOCAN
013h	—	093h	—	113h	CM2CON0	193h	EEDATL	213h	SSP1MSK	293h	CCP1CON	313h	—	393h	IOCAF
014h	PIR4	094h	PIE4	114h	CM2CON1	194h	EEDATH	214h	SSP1STAT	294h	—	314h	—	394h	IOCBP
015h	TMR0	095h	OPTION_REG	115h	CMOUT	195h	EECON1	215h	SSP1CON1	295h	—	315h	—	395h	IOCBN
016h	TMR1L	096h	PCON	116h	BORCON	196h	EECON2	216h	SSP1CON2	296h	—	316h	—	396h	IOCBF
017h	TMR1H	097h	WDTCON	117h	FVRCON	197h	VREGCON(1)	217h	SSP1CON3	297h	—	317h	—	397h	IOCCP
018h	T1CON	098h	OSCTUNE	118h	DAC1CON0	198h	—	218h	—	298h	CCPR2L	318h	—	398h	IOCCN
019h	T1GCON	099h	OSCCON	119h	DAC1CON1	199h	RCREG	219h	—	299h	CCPR2H	319h	—	399h	IOCCF
01Ah	TMR2	09Ah	OSCSTAT	11Ah	CM4CON0	19Ah	TXREG	21Ah	—	29Ah	CCP2CON	31Ah	—	39Ah	—
01Bh	PR2	09Bh	ADRESL	11Bh	CM4CON1	19Bh	SPBRGL	21Bh	—	29Bh	—	31Bh	—	39Bh	—
01Ch	T2CON	09Ch	ADRESH	11Ch	APFCON2	19Ch	SPBRGH	21Ch	—	29Ch	—	31Ch	—	39Ch	—
01Dh	—	09Dh	ADCON0	11Dh	APFCON1	19Dh	RCSTA	21Dh	—	29Dh	—	31Dh	—	39Dh	IOCEP
01Eh	—	09Eh	ADCON1	11Eh	CM3CON0	19Eh	TXSTA	21Eh	—	29Eh	—	31Eh	—	39Eh	IOCEN
01Fh	—	09Fh	ADCON2	11Fh	CM3CON1	19Fh	BAUDCON	21Fh	—	29Fh	—	31Fh	—	39Fh	IOCEF
020h	General Purpose Register 80 Bytes	0A0h	General Purpose Register 80 Bytes	120h	General Purpose Register 80 Bytes	1A0h	General Purpose Register 80 Bytes	220h	General Purpose Register 80 Bytes	2A0h	General Purpose Register 80 Bytes	320h	General Purpose Register 16 Bytes	3A0h	Unimplemented Read as '0'
06Fh		0EFh		13Fh		1EFh		26Fh		2EFh		32Fh		3EFh	
				140h								330h	Unimplemented Read as '0'		
				16Fh								36Fh			
070h	Common RAM 70h – 7Fh	0F0h	Accesses 70h – 7Fh	170h	Accesses 70h – 7Fh	1F0h	Accesses 70h – 7Fh	270h	Accesses 70h – 7Fh	2F0h	Accesses 70h – 7Fh	370h	Accesses 70h – 7Fh	3F0h	Accesses 70h – 7Fh
07Fh		0FFh		17Fh		1FFh		27Fh		2FFh		37Fh		3FFh	

Legend: = Unimplemented data memory locations, read as '0'.

Note 1: PIC16F1784 only.

© 2012-2014 Microchip Technology Inc.

TABLE 3-4: PIC16(L)F1786 MEMORY MAP (BANKS 0-7)

	BANK 0		BANK 1		BANK 2		BANK 3		BANK 4		BANK 5		BANK 6		BANK 7
000h	Core Registers (Table 3-2)	080h	Core Registers (Table 3-2)	100h	Core Registers (Table 3-2)	180h	Core Registers (Table 3-2)	200h	Core Registers (Table 3-2)	280h	Core Registers (Table 3-2)	300h	Core Registers (Table 3-2)	380h	Core Registers (Table 3-2)
00Bh		08Bh		10Bh		18Bh		20Bh		28Bh		30Bh		38Bh	
00Ch	PORTA	08Ch	TRISA	10Ch	LATA	18Ch	ANSELA	20Ch	WPUA	28Ch	ODCONA	30Ch	SLRCONA	38Ch	INLVLA
00Dh	PORTB	08Dh	TRISB	10Dh	LATB	18Dh	ANSELB	20Dh	WPUB	28Dh	ODCONB	30Dh	SLRCONB	38Dh	INLVLB
00Eh	PORTC	08Eh	TRISC	10Eh	LATC	18Eh	—	20Eh	WPUC	28Eh	ODCONC	30Eh	SLRCONC	38Eh	INLVLC
00Fh	—	08Fh	—	10Fh	—	18Fh	—	20Fh	—	28Fh	—	30Fh	—	38Fh	—
010h	PORTE	090h	TRISE	110h	—	190h	—	210h	WPUE	290h	—	310h	—	390h	INLVLE
011h	PIR1	091h	PIE1	111h	CM1CON0	191h	EEADRL	211h	SSP1BUF	291h	CCPR1L	311h	—	391h	IOCAP
012h	PIR2	092h	PIE2	112h	CM1CON1	192h	EEADRH	212h	SSP1ADD	292h	CCPR1H	312h	—	392h	IOCAN
013h	—	093h	—	113h	CM2CON0	193h	EEDATL	213h	SSP1MSK	293h	CCP1CON	313h	—	393h	IOCAF
014h	PIR4	094h	PIE4	114h	CM2CON1	194h	EEDATH	214h	SSP1STAT	294h	—	314h	—	394h	IOCBP
015h	TMR0	095h	OPTION_REG	115h	CMOUT	195h	EECON1	215h	SSP1CON1	295h	—	315h	—	395h	IOCBN
016h	TMR1L	096h	PCON	116h	BORCON	196h	EECON2	216h	SSP1CON2	296h	—	316h	—	396h	IOCBF
017h	TMR1H	097h	WDTCON	117h	FVRCON	197h	VREGCON(1)	217h	SSP1CON3	297h	—	317h	—	397h	IOCCP
018h	T1CON	098h	OSCTUNE	118h	DAC1CON0	198h	—	218h	—	298h	CCPR2L	318h	—	398h	IOCCN
019h	T1GCON	099h	OSCCON	119h	DAC1CON1	199h	RCREG	219h	—	299h	CCPR2H	319h	—	399h	IOCCF
01Ah	TMR2	09Ah	OSCSTAT	11Ah	CM4CON0	19Ah	TXREG	21Ah	—	29Ah	CCP2CON	31Ah	—	39Ah	—
01Bh	PR2	09Bh	ADRESL	11Bh	CM4CON1	19Bh	SPBRGL	21Bh	—	29Bh	—	31Bh	—	39Bh	—
01Ch	T2CON	09Ch	ADRESH	11Ch	APFCON2	19Ch	SPBRGH	21Ch	—	29Ch	—	31Ch	—	39Ch	—
01Dh	—	09Dh	ADCON0	11Dh	APFCON1	19Dh	RCSTA	21Dh	—	29Dh	—	31Dh	—	39Dh	IOCEP
01Eh	—	09Eh	ADCON1	11Eh	CM3CON0	19Eh	TXSTA	21Eh	—	29Eh	—	31Eh	—	39Eh	IOCEN
01Fh	—	09Fh	ADCON2	11Fh	CM3CON1	19Fh	BAUDCON	21Fh	—	29Fh	—	31Fh	—	39Fh	IOCEF
020h	General Purpose Register 80 Bytes	0A0h	General Purpose Register 80 Bytes	120h	General Purpose Register 80 Bytes	1A0h	General Purpose Register 80 Bytes	220h	General Purpose Register 80 Bytes	2A0h	General Purpose Register 80 Bytes	320h	General Purpose Register 80 Bytes	3A0h	General Purpose Register 80 Bytes
06Fh		0EFh		13Fh 140h 16Fh		1EFh		26Fh		2EFh		36Fh		3EFh	
070h	Common RAM 70h – 7Fh	0F0h	Accesses 70h – 7Fh	170h	Accesses 70h – 7Fh	1F0h	Accesses 70h – 7Fh	270h	Accesses 70h – 7Fh	2F0h	Accesses 70h – 7Fh	370h	Accesses 70h – 7Fh	3F0h	Accesses 70h – 7Fh
07Fh		0FFh		17Fh		1FFh		27Fh		2FFh		37Fh		3FFh	

Legend: = Unimplemented data memory locations, read as '0'.

Note 1: PIC16F1786 only.

© 2012-2014 Microchip Technology Inc.

TABLE 3-5: PIC16(L)F1787 MEMORY MAP (BANKS 0-7)

	BANK 0		BANK 1		BANK 2		BANK 3		BANK 4		BANK 5		BANK 6		BANK 7
000h	Core Registers (Table 3-2)	080h	Core Registers (Table 3-2)	100h	Core Registers (Table 3-2)	180h	Core Registers (Table 3-2)	200h	Core Registers (Table 3-2)	280h	Core Registers (Table 3-2)	300h	Core Registers (Table 3-2)	380h	Core Registers (Table 3-2)
00Bh		08Bh		10Bh		18Bh		20Bh		28Bh		30Bh		38Bh	
00Ch	PORTA	08Ch	TRISA	10Ch	LATA	18Ch	ANSELA	20Ch	WPUA	28Ch	ODCONA	30Ch	SLRCONA	38Ch	INLVLA
00Dh	PORTB	08Dh	TRISB	10Dh	LATB	18Dh	ANSELB	20Dh	WPUB	28Dh	ODCONB	30Dh	SLRCONB	38Dh	INLVLB
00Eh	PORTC	08Eh	TRISC	10Eh	LATC	18Eh	—	20Eh	WPUC	28Eh	ODCONC	30Eh	SLRCONC	38Eh	INLVLC
00Fh	PORTD	08Fh	TRISD	10Fh	LATD	18Fh	ANSELD	20Fh	WPUD	28Fh	ODCOND	30Fh	SLRCOND	38Fh	INLVLD
010h	PORTE	090h	TRISE	110h	LATE	190h	ANSELE	210h	WPUE	290h	ODCONE	310h	SLRCONE	390h	INLVLE
011h	PIR1	091h	PIE1	111h	CM1CON0	191h	EEADRL	211h	SSP1BUF	291h	CCPR1L	311h	—	391h	IOCAP
012h	PIR2	092h	PIE2	112h	CM1CON1	192h	EEADRH	212h	SSP1ADD	292h	CCPR1H	312h	—	392h	IOCAN
013h	—	093h	—	113h	CM2CON0	193h	EEDATL	213h	SSP1MSK	293h	CCP1CON	313h	—	393h	IOCAF
014h	PIR4	094h	PIE4	114h	CM2CON1	194h	EEDATH	214h	SSP1STAT	294h	—	314h	—	394h	IOCBP
015h	TMR0	095h	OPTION_REG	115h	CMOUT	195h	EECON1	215h	SSP1CON1	295h	—	315h	—	395h	IOCBN
016h	TMR1L	096h	PCON	116h	BORCON	196h	EECON2	216h	SSP1CON2	296h	—	316h	—	396h	IOCBF
017h	TMR1H	097h	WDTCON	117h	FVRCON	197h	VREGCON(1)	217h	SSP1CON3	297h	—	317h	—	397h	IOCCP
018h	T1CON	098h	OSCTUNE	118h	DAC1CON0	198h	—	218h	—	298h	CCPR2L	318h	—	398h	IOCCN
019h	T1GCON	099h	OSCCON	119h	DAC1CON1	199h	RCREG	219h	—	299h	CCPR2H	319h	—	399h	IOCCF
01Ah	TMR2	09Ah	OSCSTAT	11Ah	CM4CON0	19Ah	TXREG	21Ah	—	29Ah	CCP2CON	31Ah	—	39Ah	—
01Bh	PR2	09Bh	ADRESL	11Bh	CM4CON1	19Bh	SPBRGL	21Bh	—	29Bh	—	31Bh	—	39Bh	—
01Ch	T2CON	09Ch	ADRESH	11Ch	APFCON2	19Ch	SPBRGH	21Ch	—	29Ch	—	31Ch	—	39Ch	—
01Dh	—	09Dh	ADCON0	11Dh	APFCON1	19Dh	RCSTA	21Dh	—	29Dh	—	31Dh	—	39Dh	IOCEP
01Eh	—	09Eh	ADCON1	11Eh	CM3CON0	19Eh	TXSTA	21Eh	—	29Eh	—	31Eh	—	39Eh	IOCEN
01Fh	—	09Fh	ADCON2	11Fh	CM3CON1	19Fh	BAUDCON	21Fh	—	29Fh	—	31Fh	—	39Fh	IOCEF
020h	General Purpose Register 80 Bytes	0A0h	General Purpose Register 80 Bytes	120h	General Purpose Register 80 Bytes	1A0h	General Purpose Register 80 Bytes	220h	General Purpose Register 80 Bytes	2A0h	General Purpose Register 80 Bytes	320h	General Purpose Register 80 Bytes	3A0h	General Purpose Register 80 Bytes
06Fh		0EFh		13Fh 140h		1EFh		26Fh		2EFh		36Fh		3EFh	
070h	Common RAM 70h – 7Fh	0F0h	Accesses 70h – 7Fh	170h	Accesses 70h – 7Fh	1F0h	Accesses 70h – 7Fh	270h	Accesses 70h – 7Fh	2F0h	Accesses 70h – 7Fh	370h	Accesses 70h – 7Fh	3F0h	Accesses 70h – 7Fh
07Fh		0FFh		17Fh		1FFh		27Fh		2FFh		37Fh		3FFh	

Legend: = Unimplemented data memory locations, read as '0'.

Note 1: PIC16F1787 only.

© 2012-2014 Microchip Technology Inc.

TABLE 3-6: PIC16(L)F1784 MEMORY MAP (BANKS 8-31)

	BANK 8	BANK 9	BANK 10	BANK 11	BANK 12	BANK 13	BANK 14	BANK 15
400h	Core Registers (Table 3-2)	Core Registers (Table 3-2)	Core Registers (Table 3-2)	Core Registers (Table 3-2)	Core Registers (Table 3-2)	Core Registers (Table 3-2)	Core Registers (Table 3-2)	Core Registers (Table 3-2)
40Bh								
40Ch	Unimplemented Read as '0'	Unimplemented Read as '0'	Unimplemented Read as '0'	Unimplemented Read as '0'	Unimplemented Read as '0'	Unimplemented Read as '0'	Unimplemented Read as '0'	Unimplemented Read as '0'
46Fh								
470h	Common RAM (Accesses 70h – 7Fh)	Common RAM (Accesses 70h – 7Fh)	Common RAM (Accesses 70h – 7Fh)	Common RAM (Accesses 70h – 7Fh)	Common RAM (Accesses 70h – 7Fh)	Common RAM (Accesses 70h – 7Fh)	Common RAM (Accesses 70h – 7Fh)	Common RAM (Accesses 70h – 7Fh)
47Fh								

	BANK 10
500h	Core Registers (Table 3-2)
50Bh	
50Ch	Unimplemented Read as '0'
510h	
511h	OPA1CON
512h	—
513h	OPA2CON
514h	Unimplemented Read as '0'
519h	
51Ah	CLKRCON
51Bh	Unimplemented Read as '0'
56Fh	
570h	Common RAM (Accesses 70h – 7Fh)
57Fh	

	BANK 16	BANK 17	BANK 18	BANK 19	BANK 20	BANK 21	BANK 22	BANK 23
800h	Core Registers (Table 3-2)	Core Registers (Table 3-2)	Core Registers (Table 3-2)	Core Registers (Table 3-2)	Core Registers (Table 3-2)	Core Registers (Table 3-2)	Core Registers (Table 3-2)	Core Registers (Table 3-2)
80Bh								
80Ch	See Table 3-10	Unimplemented Read as '0'	Unimplemented Read as '0'	Unimplemented Read as '0'	Unimplemented Read as '0'	Unimplemented Read as '0'	Unimplemented Read as '0'	Unimplemented Read as '0'
86Fh								
870h	Common RAM (Accesses 70h – 7Fh)	Common RAM (Accesses 70h – 7Fh)	Common RAM (Accesses 70h – 7Fh)	Common RAM (Accesses 70h – 7Fh)	Common RAM (Accesses 70h – 7Fh)	Common RAM (Accesses 70h – 7Fh)	Common RAM (Accesses 70h – 7Fh)	Common RAM (Accesses 70h – 7Fh)
87Fh								

	BANK 24	BANK 25	BANK 26	BANK 27	BANK 28	BANK 29	BANK 30	BANK 31
C00h	Core Registers (Table 3-2)	Core Registers (Table 3-2)	Core Registers (Table 3-2)	Core Registers (Table 3-2)	Core Registers (Table 3-2)	Core Registers (Table 3-2)	Core Registers (Table 3-2)	Core Registers (Table 3-2)
C0Bh								
C0Ch	Unimplemented Read as '0'	Unimplemented Read as '0'	Unimplemented Read as '0'	Unimplemented Read as '0'	Unimplemented Read as '0'	Unimplemented Read as '0'	Unimplemented Read as '0'	See Table 3-9
C6Fh								
C70h	Common RAM (Accesses 70h – 7Fh)	Common RAM (Accesses 70h – 7Fh)	Common RAM (Accesses 70h – 7Fh)	Common RAM (Accesses 70h – 7Fh)	Common RAM (Accesses 70h – 7Fh)	Common RAM (Accesses 70h – 7Fh)	Common RAM (Accesses 70h – 7Fh)	Common RAM (Accesses 70h – 7Fh)
C7Fh								

Legend: = Unimplemented data memory locations, read as '0'

© 2012-2014 Microchip Technology Inc.

TABLE 3-7: PIC16(L)F1786/7 MEMORY MAP (BANKS 8-31)

BANK 8	BANK 9	BANK 10	BANK 11	BANK 12	BANK 13	BANK 14	BANK 15
400h Core Registers (Table 3-2) 40Bh	480h Core Registers (Table 3-2) 48Bh	500h Core Registers (Table 3-2) 50Bh	580h Core Registers (Table 3-2) 58Bh	600h Core Registers (Table 3-2) 60Bh	680h Core Registers (Table 3-2) 68Bh	700h Core Registers (Table 3-2) 70Bh	780h Core Registers (Table 3-2) 78Bh
40Ch Unimplemented Read as '0' 41F	48Ch Unimplemented Read as '0' 49F	50Ch See Table 3-8	58Ch Unimplemented Read as '0' 59F	60Ch Unimplemented Read as '0' 61F	68Ch Unimplemented Read as '0'	70Ch Unimplemented Read as '0'	78Ch Unimplemented Read as '0'
420 General Purpose Register 80 Bytes 46Fh	4A0 General Purpose Register 80 Bytes 4EFh	56Fh	5A0 General Purpose Register 80 Bytes 5EFh	620 General Purpose Register 48 Bytes 64F 650 Unimplemented Read as '0' 66Fh	6EFh	76Fh	7EFh
470h Common RAM (Accesses 70h – 7Fh) 47Fh	4F0h Common RAM (Accesses 70h – 7Fh) 4FFh	570h Common RAM (Accesses 70h – 7Fh) 57Fh	5F0h Common RAM (Accesses 70h – 7Fh) 5FFh	670h Common RAM (Accesses 70h – 7Fh) 67Fh	6F0h Common RAM (Accesses 70h – 7Fh) 6FFh	770h Common RAM (Accesses 70h – 7Fh) 77Fh	7F0h Common RAM (Accesses 70h – 7Fh) 7FFh

BANK 16	BANK 17	BANK 18	BANK 19	BANK 20	BANK 21	BANK 22	BANK 23
800h Core Registers (Table 3-2) 80Bh	880h Core Registers (Table 3-2) 88Bh	900h Core Registers (Table 3-2) 90Bh	980h Core Registers (Table 3-2) 98Bh	A00h Core Registers (Table 3-2) A0Bh	A80h Core Registers (Table 3-2) A8Bh	B00h Core Registers (Table 3-2) B0Bh	B80h Core Registers (Table 3-2) B8Bh
80Ch See Table 3-10 86Fh	88Ch Unimplemented Read as '0' 8EFh	90Ch Unimplemented Read as '0' 96Fh	98Ch Unimplemented Read as '0' 9EFh	A0Ch Unimplemented Read as '0' A6Fh	A8Ch Unimplemented Read as '0' AEFh	B0Ch Unimplemented Read as '0' B6Fh	B8Ch Unimplemented Read as '0' BEFh
870h Common RAM (Accesses 70h – 7Fh) 87Fh	8F0h Common RAM (Accesses 70h – 7Fh) 8FFh	970h Common RAM (Accesses 70h – 7Fh) 97Fh	9F0h Common RAM (Accesses 70h – 7Fh) 9FFh	A70h Common RAM (Accesses 70h – 7Fh) A7Fh	AF0h Common RAM (Accesses 70h – 7Fh) AFFh	B70h Common RAM (Accesses 70h – 7Fh) B7Fh	BF0h Common RAM (Accesses 70h – 7Fh) BFFh

BANK 24	BANK 25	BANK 26	BANK 27	BANK 28	BANK 29	BANK 30	BANK 31
C00h Core Registers (Table 3-2) C0Bh	C80h Core Registers (Table 3-2) C8Bh	D00h Core Registers (Table 3-2) D0Bh	D80h Core Registers (Table 3-2) D8Bh	E00h Core Registers (Table 3-2) E0Bh	E80h Core Registers (Table 3-2) E8Bh	F00h Core Registers (Table 3-2) F0Bh	F80h Core Registers (Table 3-2) F8Bh
C0Ch Unimplemented Read as '0' C6Fh	C8Ch Unimplemented Read as '0' CEFh	D0Ch Unimplemented Read as '0' D6Fh	D8Ch Unimplemented Read as '0' DEFh	E0Ch Unimplemented Read as '0' E6Fh	E8Ch Unimplemented Read as '0' EEFh	F0Ch Unimplemented Read as '0' F6Fh	F8Ch See Table 3-9 FEFh
C70h Common RAM (Accesses 70h – 7Fh) C7Fh	CF0h Common RAM (Accesses 70h – 7Fh) CFFh	D70h Common RAM (Accesses 70h – 7Fh) D7Fh	DF0h Common RAM (Accesses 70h – 7Fh) DFFh	E70h Common RAM (Accesses 70h – 7Fh) E7Fh	EF0h Common RAM (Accesses 70h – 7Fh) EFFh	F70h Common RAM (Accesses 70h – 7Fh) F7Fh	FF0h Common RAM (Accesses 70h – 7Fh) FFFh

= Unimplemented data memory locations, read as '0'

© 2012-2014 Microchip Technology Inc.

TABLE 3-8: PIC16(L)F1786/7 MEMORY MAP (BANK 10 DETAILS)

	BANK 10
500h	Core Registers (Table 3-2)
50Bh	
50Ch	Unimplemented Read as ‘0’
510h	
511h	OPA1CON
512h	—
513h	OPA2CON
514h	Unimplemented Read as ‘0’
519h	
51Ah	CLKRCON
51Bh	Unimplemented Read as ‘0’
51Fh	
520h	General Purpose Register 80 Bytes
56Fh	
570h	Common RAM (Accesses 70h – 7Fh)
57Fh	

Legend: = Unimplemented data memory locations, read as ‘0’.

TABLE 3-9: PIC16(L)F1784/6/7 MEMORY MAP (BANK 31 DETAILS)

	BANK 31
F8Ch	Unimplemented Read as ‘0’
FE3h	
FE4h	STATUS_SHAD
FE5h	WREG_SHAD
FE6h	BSR_SHAD
FE7h	PCLATH_SHAD
FE8h	FSR0L_SHAD
FE9h	FSR0H_SHAD
FEAh	FSR1L_SHAD
FEBh	FSR1H_SHAD
FECh	—
FEDh	STKPTR
FEEh	TOSL
FEFh	TOSH

Legend: = Unimplemented data memory locations, read as ‘0’.

© 2012-2014 Microchip Technology Inc.

TABLE 3-10: PIC16(L)F1784/6/7 MEMORY MAP (BANK 16 DETAILS)

	BANK 16		BANK 16		BANK 16
811h	PSMC1CON	831h	PSMC2CON	851h	PSMC3CON
812h	PSMC1MDL	832h	PSMC2MDL	852h	PSMC3MDL
813h	PSMC1SYNC	833h	PSMC2SYNC	853h	PSMC3SYNC
814h	PSMC1CLK	834h	PSMC2CLK	854h	PSMC3CLK
815h	PSMC1OEN	835h	PSMC2OEN	855h	PSMC3OEN
816h	PSMC1POL	836h	PSMC2POL	856h	PSMC3POL
817h	PSMC1BLNK	837h	PSMC2BLNK	857h	PSMC3BLNK
818h	PSMC1REBS	838h	PSMC2REBS	858h	PSMC3REBS
819h	PSMC1FEBS	839h	PSMC2FEBS	859h	PSMC3FEBS
81Ah	PSMC1PHS	83Ah	PSMC2PHS	85Ah	PSMC3PHS
81Bh	PSMC1DCS	83Bh	PSMC2DCS	85Bh	PSMC3DCS
81Ch	PSMC1PRS	83Ch	PSMC2PRS	85Ch	PSMC3PRS
81Dh	PSMC1ASDC	83Dh	PSMC2ASDC	85Dh	PSMC3ASDC
81Eh	PSMC1ASDD	83Eh	PSMC2ASDD	85Eh	PSMC3ASDD
81Fh	PSMC1ASDS	83Fh	PSMC2ASDS	85Fh	PSMC3ASDS
820h	PSMC1INT	840h	PSMC2INT	860h	PSMC3INT
821h	PSMC1PHL	841h	PSMC2PHL	861h	PSMC3PHL
822h	PSMC1PHH	842h	PSMC2PHH	862h	PSMC3PHH
823h	PSMC1DCL	843h	PSMC2DCL	863h	PSMC3DCL
824h	PSMC1DCH	844h	PSMC2DCH	864h	PSMC3DCH
825h	PSMC1PRL	845h	PSMC2PRL	865h	PSMC3PRL
826h	PSMC1PRH	846h	PSMC2PRH	866h	PSMC3PRH
827h	PSMC1TMRL	847h	PSMC2TMRL	867h	PSMC3TMRL
828h	PSMC1TMRH	848h	PSMC2TMRH	868h	PSMC3TMRH
829h	PSMC1DBR	849h	PSMC2DBR	869h	PSMC3DBR
82Ah	PSMC1DBF	84Ah	PSMC2DBF	86Ah	PSMC3DBF
82Bh	PSMC1BLKR	84Bh	PSMC2BLKR	86Bh	PSMC3BLKR
82Ch	PSMC1BLKF	84Ch	PSMC2BLKF	86Ch	PSMC3BLKF
82Dh	PSMC1FFA	84Dh	PSMC2FFA	86Dh	PSMC3FFA
82Eh	PSMC1STR0	84Eh	PSMC2STR0	86Eh	PSMC3STR0
82Fh	PSMC1STR1	84Fh	PSMC2STR1	86Fh	PSMC3STR1
830h	—	850h	—	870h	—

Legend: = Unimplemented data memory locations, read as '0'.

3.3.5 CORE FUNCTION REGISTERS SUMMARY

The Core Function registers listed in Table 3-11 can be addressed from any Bank.

TABLE 3-11: CORE FUNCTION REGISTERS SUMMARY

Addr	Name	Bit 7	Bit 6	Bit 5	Bit 4	Bit 3	Bit 2	Bit 1	Bit 0	Value on POR, BOR	Value on all other Resets
Bank 0-31											
x00h or x80h	INDF0	Addressing this location uses contents of FSR0H/FSR0L to address data memory (not a physical register)								xxxx xxxx	uuuu uuuu
x01h or x81h	INDF1	Addressing this location uses contents of FSR1H/FSR1L to address data memory (not a physical register)								xxxx xxxx	uuuu uuuu
x02h or x82h	PCL	Program Counter (PC) Least Significant Byte								0000 0000	0000 0000
x03h or x83h	STATUS	—	—	—	$\overline{TO}$	$\overline{PD}$	Z	DC	C	---1 1000	---q quuu
x04h or x84h	FSR0L	Indirect Data Memory Address 0 Low Pointer								0000 0000	uuuu uuuu
x05h or x85h	FSR0H	Indirect Data Memory Address 0 High Pointer								0000 0000	0000 0000
x06h or x86h	FSR1L	Indirect Data Memory Address 1 Low Pointer								0000 0000	uuuu uuuu
x07h or x87h	FSR1H	Indirect Data Memory Address 1 High Pointer								0000 0000	0000 0000
x08h or x88h	BSR	—	—	—	BSR4	BSR3	BSR2	BSR1	BSR0	---0 0000	---0 0000
x09h or x89h	WREG	Working Register								0000 0000	uuuu uuuu
x0Ah or x8Ah	PCLATH	—	Write Buffer for the upper 7 bits of the Program Counter							-000 0000	-000 0000
x0Bh or x8Bh	INTCON	GIE	PEIE	TMR0IE	INTE	IOCIE	TMR0IF	INTF	IOCIF	0000 0000	0000 0000

Legend: x = unknown, u = unchanged, q = value depends on condition, - = unimplemented, read as '0', r = reserved. Shaded locations are unimplemented, read as '0'.

© 2012-2014 Microchip Technology Inc.

TABLE 3-12: SPECIAL FUNCTION REGISTER SUMMARY

Addr	Name	Bit 7	Bit 6	Bit 5	Bit 4	Bit 3	Bit 2	Bit 1	Bit 0	Value on POR, BOR	Value on all other Resets
Bank 0											
00Ch	PORTA	PORTA Data Latch when written: PORTA pins when read								xxxx xxxx	uuuu uuuu
00Dh	PORTB	PORTB Data Latch when written: PORTB pins when read								xxxx xxxx	uuuu uuuu
00Eh	PORTC	PORTC Data Latch when written: PORTC pins when read								xxxx xxxx	uuuu uuuu
00Fh	PORTD(3)	PORTD Data Latch when written: PORTD pins when read								xxxx xxxx	uuuu uuuu
010h	PORTE	—	—	—	—	RE3	RE2(3)	RE1(3)	RE0(3)	---- xxxx	---- uuuu
011h	PIR1	TMR1GIF	ADIF	RCIF	TXIF	SSP1IF	CCP1IF	TMR2IF	TMR1IF	0000 0000	0000 0000
012h	PIR2	OSFIF	C2IF	C1IF	EEIF	BCL1IF	C4IF	C3IF	CCP2IF	0000 0-00	0000 0-00
13h	PIR3	—	—	—	CCP3IF	—	—	—	—	---0 ----	0000 0000
014h	PIR4	—	PSMC3TIF	PSMC2TIF	PSMC1TIF	—	PSMC3SIF	PSMC2SIF	PSMC1SIF	-000 -000	-000 -000
015h	TMR0	Timer0 Module Register								xxxx xxxx	uuuu uuuu
016h	TMR1L	Holding Register for the Least Significant Byte of the 16-bit TMR1 Register								xxxx xxxx	uuuu uuuu
017h	TMR1H	Holding Register for the Most Significant Byte of the 16-bit TMR1 Register								xxxx xxxx	uuuu uuuu
018h	T1CON	TMR1CS1	TMR1CS0	T1CKPS1	T1CKPS0	T1OSCEN	$\overline{\text{T1SYNC}}$	—	TMR1ON	0000 00-0	uuuu uu-u
019h	T1GCON	TMR1GE	T1GPOL	T1GTM	T1GSPM	T1GGO/$\overline{\text{DONE}}$	T1GVAL	T1GSS<1:0>		0000 0x00	uuuu uxuu
016h	TMR2	Holding Register for the Least Significant Byte of the 16-bit TMR2 Register								xxxx xxxx	uuuu uuuu
017h	PR2	Holding Register for the Most Significant Byte of the 16-bit TMR2 Register								xxxx xxxx	uuuu uuuu
018h	T2CON	—	T2OUTPS<3:0>				TMR2ON	T2CKPS<1:0>		-000 0000	-000 0000
01Dh to 01Fh	—	Unimplemented								—	—
Bank 1											
08Ch	TRISA	PORTA Data Direction Register								1111 1111	1111 1111
08Dh	TRISB	PORTB Data Direction Register								1111 1111	1111 1111
08Eh	TRISC	PORTC Data Direction Register								1111 1111	1111 1111
08Fh	TRISD(3)	PORTD Data Direction Register								1111 1111	1111 1111
090h	TRISE	—	—	—	—	—(2)	TRISE2(3)	TRISE1(3)	TRISE0(3)	---- 1111	---- 1111
091h	PIE1	TMR1GIE	ADIE	RCIE	TXIE	SSP1IE	CCP1IE	TMR2IE	TMR1IE	0000 0000	0000 0000
092h	PIE2	OSFIE	C2IE	C1IE	EEIE	BCL1IE	C4IE	C3IE	CCP2IE	0000 0-00	0000 0-00
093h	PIE3	—	—	—	CCP3IE	—	—	—	—	---0 ----	0000 0000
094h	PIE4	—	PSMC3TIE	PSMC2TIE	PSMC1TIE	—	PSMC3SIE	PSMC2SIE	PSMC1SIE	-000 -000	-000 -000
095h	OPTION_REG	$\overline{\text{WPUEN}}$	INTEDG	TMR0CS	TMR0SE	PSA	PS<2:0>			1111 1111	1111 1111
096h	PCON	STKOVF	STKUNF	—	$\overline{\text{RWDT}}$	$\overline{\text{RMCLR}}$	$\overline{\text{RI}}$	$\overline{\text{POR}}$	$\overline{\text{BOR}}$	00-1 11qq	qq-q qquu
097h	WDTCON	—	—	WDTPS<4:0>					SWDTEN	--01 0110	--01 0110
098h	OSCTUNE	—	—	TUN<5:0>						--00 0000	--00 0000
099h	OSCCON	SPLLEN	IRCF<3:0>				—	SCS<1:0>		0011 1-00	0011 1-00
09Ah	OSCSTAT	T1OSCR	PLLR	OSTS	HFIOFR	HFIOFL	MFIOFR	LFIOFR	HFIOFS	00q0 --00	qqqq --0q
09Bh	ADRESL	A/D Result Register Low								xxxx xxxx	uuuu uuuu
09Ch	ADRESH	A/D Result Register High								xxxx xxxx	uuuu uuuu
09Dh	ADCON0	ADRMD	CHS<4:0>					GO/$\overline{\text{DONE}}$	ADON	0000 0000	0000 0000
09Eh	ADCON1	ADFM	ADCS<2:0>			—	ADNREF	ADPREF<1:0>		0000 -000	0000 -000
09Fh	ADCON2	TRIGSEL<3:0>				CHSN<3:0>				000- -000	000- -000

Legend: x = unknown, u = unchanged, q = value depends on condition, - = unimplemented, read as '0', r = reserved. Shaded locations are unimplemented, read as '0'.

Note 1: These registers can be addressed from any bank.
2: Unimplemented, read as '1'.
3: PIC16(L)F1784/7 only.
4: PIC16F1784/6/7 only.

TABLE 3-12: SPECIAL FUNCTION REGISTER SUMMARY (CONTINUED)

Addr	Name	Bit 7	Bit 6	Bit 5	Bit 4	Bit 3	Bit 2	Bit 1	Bit 0	Value on POR, BOR	Value on all other Resets
Bank 2											
10Ch	LATA	PORTA Data Latch								xxxx xxxx	uuuu uuuu
10Dh	LATB	PORTB Data Latch								xxxx xxxx	uuuu uuuu
10Eh	LATC	PORTC Data Latch								xxxx xxxx	uuuu uuuu
10Fh	LATD(3)	PORTD Data Latch								xxxx xxxx	uuuu uuuu
110h	LATE(3)	—	—	—	—	—	LATE2	LATE1	LATE0	---- -111	---- -111
111h	CM1CON0	C1ON	C1OUT	C1OE	C1POL	C1ZLF	C1SP	C1HYS	C1SYNC	0000 0100	0000 0100
112h	CM1CON1	C1INTP	C1INTN	C1PCH<2:0>			C1NCH<2:0>			0000 0000	0000 0000
113h	CM2CON0	C2ON	C2OUT	C2OE	C2POL	C2ZLF	C2SP	C2HYS	C2SYNC	0000 0100	0000 0100
114h	CM2CON1	C2INTP	C2INTN	C2PCH<2:0>			C2NCH<2:0>			0000 0000	0000 0000
115h	CMOUT	—	—	—	—	MC4OUT(3)	MC3OUT	MC2OUT	MC1OUT	---- 0000	---- 0000
116h	BORCON	SBOREN	BORFS	—	—	—	—	—	BORRDY	1x-- ---q	uu-- ---u
117h	FVRCON	FVREN	FVRRDY	TSEN	TSRNG	CDAFVR<1:0>		ADFVR<1:0>		0q00 0000	0q00 0000
118h	DAC1CON0	DAC1EN	---	DAC1OE1	DAC1OE2	DAC1PSS<1:0>		---	DAC1NSS	0-00 00-0	0-00 00-0
119h	DAC1CON1	DAC1R<7:0>								0000 0000	0000 0000
11Ah	CM4CON0	C4ON	C4OUT	C4OE	C4POL	C4ZLF	C4SP	C4HYS	C4SYNC	0000 0100	0000 0100
11Bh	CM4CON1	C4INTP	C4INTN	C4PCH<1:0>		—	—	C4NCH<1:0>		0000 --00	0000 --00
11Ch	APFCON2	—	—	—	—	—	—	—	CCP3SEL	---- ---0	---- ---0
11Dh	APFCON1	C2OUTSEL	CC1PSEL	SDOSEL	SCKSEL	SDISEL	TXSEL	RXSEL	CCP2SEL	0000 0000	0000 0000
11Eh	CM3CON0	C3ON	C3OUT	C3OE	C3POL	C3ZLF	C3SP	C3HYS	C3SYNC	0000 0100	0000 0100
11Fh	CM3CON1	C3INTP	C3INTN	C3PCH<2:0>			C3NCH<2:0>			0000 0000	0000 0000
Bank 3											
18Ch	ANSELA	ANSA7	—	ANSA5	ANSA4	ANSA3	ANSA2	ANSA1	ANSA0	1-11 1111	1-11 1111
18Dh	ANSELB	—	ANSB6	ANSB5	ANSB4	ANSB3	ANSB2	ANSB1	ANSB0	-111 1111	-111 1111
18Eh	Unimplemented								—	—	—
18Fh	ANSELD(3)	—	—	—	—	—	ANSD2	ANSD1	ANSD0	---- -111	---- -111
190h	ANSELE(3)	—	—	—	—	—	ANSE2	ANSE1	ANSE0	---- -111	---- -111
191h	EEADRL	EEPROM / Program Memory Address Register Low Byte								0000 0000	0000 0000
192h	EEADRH	—(2)	EEPROM / Program Memory Address Register High Byte							1000 0000	1000 0000
193h	EEDATL	EEPROM / Program Memory Read Data Register Low Byte								xxxx xxxx	uuuu uuuu
194h	EEDATH	—	—	EEPROM / Program Memory Read Data Register High Byte						--xx xxxx	--uu uuuu
195h	EECON1	EEPGD	CFGS	LWLO	FREE	WRERR	WREN	WR	RD	0000 x000	0000 q000
196h	EECON2	EEPROM / Program Memory Control Register 2								0000 0000	0000 0000
197h	VREGCON(4)	—	—	—	—	—	—	VREGPM	Reserved	---- --01	---- --01
198h	—	Unimplemented								—	—
199h	RCREG	EUSART Receive Data Register								0000 0000	0000 0000
19Ah	TXREG	EUSART Transmit Data Register								0000 0000	0000 0000
19Bh	SPBRG	BRG<7:0>								0000 0000	0000 0000
19Ch	SPBRGH	BRG<15:8>								0000 0000	0000 0000
19Dh	RCSTA	SPEN	RX9	SREN	CREN	ADDEN	FERR	OERR	RX9D	0000 0000	0000 0000
19Eh	TXSTA	CSRC	TX9	TXEN	SYNC	SENDB	BRGH	TRMT	TX9D	0000 0010	0000 0010
19Fh	BAUDCON	ABDOVF	RCIDL	—	SCKP	BRG16	—	WUE	ABDEN	01-0 0-00	01-0 0-00

Legend: x = unknown, u = unchanged, q = value depends on condition, - = unimplemented, read as '0', r = reserved.
Shaded locations are unimplemented, read as '0'.

Note 1: These registers can be addressed from any bank.
2: Unimplemented, read as '1'.
3: PIC16(L)F1784/7 only.
4: PIC16F1784/6/7 only.

© 2012-2014 Microchip Technology Inc.

TABLE 3-12: SPECIAL FUNCTION REGISTER SUMMARY (CONTINUED)

Addr	Name	Bit 7	Bit 6	Bit 5	Bit 4	Bit 3	Bit 2	Bit 1	Bit 0	Value on POR, BOR	Value on all other Resets
Bank 4											
20Ch	WPUA	WPUA7	WPUA6	WPUA5	WPUA4	WPUA3	WPUA2	WPUA1	WPUA0	1111 1111	1111 1111
20Dh	WPUB	WPUB7	WPUB6	WPUB5	WPUB4	WPUB3	WPUB2	WPUB1	WPUB0	1111 1111	1111 1111
20Eh	WPUC	WPUC7	WPUC6	WPUC5	WPUC4	WPUC3	WPUC2	WPUC1	WPUC0	1111 1111	1111 1111
20Fh	WPUD(3)	WPUD7	WPUD6	WPUD5	WPUD4	WPUD3	WPUD2	WPUD1	WPUD0	1111 1111	1111 1111
210h	WPUE	—	—	—	—	WPUE3	WPUE2(3)	WPUE1(3)	WPUE0(3)	---- 1111	---- 1111
211h	SSP1BUF	Synchronous Serial Port Receive Buffer/Transmit Register								xxxx xxxx	uuuu uuuu
212h	SSP1ADD	ADD<7:0>								0000 0000	0000 0000
213h	SSP1MSK	MSK<7:0>								1111 1111	1111 1111
214h	SSP1STAT	SMP	CKE	D/$\overline{A}$	P	S	R/$\overline{W}$	UA	BF	0000 0000	0000 0000
215h	SSP1CON1	WCOL	SSPOV	SSPEN	CKP	SSPM<3:0>				0000 0000	0000 0000
216h	SSP1CON2	GCEN	ACKSTAT	ACKDT	ACKEN	RCEN	PEN	RSEN	SEN	0000 0000	0000 0000
217h	SSP1CON3	ACKTIM	PCIE	SCIE	BOEN	SDAHT	SBCDE	AHEN	DHEN	0000 0000	0000 0000
218h — 21Fh	—	Unimplemented								—	—
Bank 5											
28Ch	ODCONA	Open Drain Control for PORTA								0000 0000	0000 0000
28Dh	ODCONB	Open Drain Control for PORTB								0000 0000	0000 0000
28Eh	ODCONC	Open Drain Control for PORTC								0000 0000	0000 0000
28Fh	ODCOND(3)	Open Drain Control for PORTD								0000 0000	0000 0000
290h	ODCONE(3)	—	—	—	—	—	ODE2	ODE1	ODE0	---- -000	---- -uuu
291h	CCPR1L	Capture/Compare/PWM Register 1 (LSB)								xxxx xxxx	uuuu uuuu
292h	CCPR1H	Capture/Compare/PWM Register 1 (MSB)								xxxx xxxx	uuuu uuuu
293h	CCP1CON	—	—	DC1B<1:0>		CCP1M<3:0>				--00 0000	--00 0000
294h — 297h	—	Unimplemented								—	—
298h	CCPR2L	Capture/Compare/PWM Register 2 (LSB)								xxxx xxxx	uuuu uuuu
299h	CCPR2H	Capture/Compare/PWM Register 2 (MSB)								xxxx xxxx	uuuu uuuu
29Ah	CCP2CON	—	—	DC2B<1:0>		CCP2M<3:0>				--00 0000	--00 0000
29Bh — 29Fh	—	Unimplemented								—	—
Bank 6											
30Ch	SLRCONA	Slew Rate Control for PORTA								0000 0000	0000 0000
30Dh	SLRCONB	Slew Rate Control for PORTB								0000 0000	0000 0000
30Eh	SLRCONC	Slew Rate Control for PORTC								0000 0000	0000 0000
30Fh	SLRCOND(3)	Slew Rate Control for PORTD								0000 0000	0000 0000
310h	SLRCONE(3)	—	—	—	—	—	SLRE2	SLRE1	SLRE0	---- -111	---- -111
311h	CCPR3L	Capture/Compare/PWM Register 3 (LSB)								xxxx xxxx	uuuu uuuu
312h	CCPR3H	Capture/Compare/PWM Register 3 (MSB)								xxxx xxxx	uuuu uuuu
313h	CCP3CON	—	—	DC3B<1:0>		CCP3M<3:0>				--00 0000	--00 0000
314h — 31Fh	—	Unimplemented								—	—

Legend: x = unknown, u = unchanged, q = value depends on condition, - = unimplemented, read as '0', r = reserved. Shaded locations are unimplemented, read as '0'.

Note 1: These registers can be addressed from any bank.
2: Unimplemented, read as '1'.
3: PIC16(L)F1784/7 only.
4: PIC16F1784/6/7 only.

TABLE 3-12: SPECIAL FUNCTION REGISTER SUMMARY (CONTINUED)

Addr	Name	Bit 7	Bit 6	Bit 5	Bit 4	Bit 3	Bit 2	Bit 1	Bit 0	Value on POR, BOR	Value on all other Resets
Bank 7											
38Ch	INLVLA	Input Type Control for PORTA								0000 0000	0000 0000
38Dh	INLVLB	Input Type Control for PORTB								0000 0000	0000 0000
38Eh	INLVLC	Input Type Control for PORTC								1111 1111	1111 1111
38Fh	INLVLD(3)	Input Type Control for PORTD								1111 1111	1111 1111
390h	INLVLE	—	—	—	—	INLVLE3	INLVLE2(3)	INLVLE1(3)	INLVLE0(3)	---- 1111	---- 1111
391h	IOCAP	IOCAP<7:0>								0000 0000	0000 0000
392h	IOCAN	IOCAN<7:0>								0000 0000	0000 0000
393h	IOCAF	IOCAF<7:0>								0000 0000	0000 0000
394h	IOCBP	IOCBP<7:0>								0000 0000	0000 0000
395h	IOCBN	IOCBN<7:0>								0000 0000	0000 0000
396h	IOCBF	IOCBF<7:0>								0000 0000	0000 0000
397h	IOCCP	IOCCP<7:0>								0000 0000	0000 0000
398h	IOCCN	IOCCN<7:0>								0000 0000	0000 0000
399h	IOCCF	IOCCF<7:0>								0000 0000	0000 0000
39Ah — 39Ch	—	Unimplemented								—	—
39Dh	IOCEP	—	—	—	—	IOCEP3	—	—	—	---- 0---	---- 0---
39Eh	IOCEN	—	—	—	—	IOCEN3	—	—	—	---- 0---	---- 0---
39Fh	IOCEF	—	—	—	—	IOCEF3	—	—	—	---- 0---	---- 0---
Bank 8-9											
40Ch or 41Fh and 48Ch or 49Fh	—	Unimplemented								—	—
Bank 10											
50Ch — 510h	—	Unimplemented								—	—
511h	OPA1CON	OPA1EN	OPA1SP	—	—	—	—	OPA1PCH<1:0>		00-- --00	00-- --00
512h	—	Unimplemented								—	—
513h	OPA2CON	OPA2EN	OPA2SP	—	—	—	—	OPA2PCH<1:0>		00-- --00	00-- --00
514h	—	Unimplemented								—	—
515h	OPA3CON(3)	OPA3EN	OPA3SP	—	—	—	—	OPA3PCH<1:0>		00-- --00	00-- --00
51Ah	CLKRCON	CLKREN	CLKROE	CLKRSLR	CLKRDC<1:0>		CLKRDIV<2:0>			0011 0000	0011 0000
51Bh — 51Fh	—	Unimplemented								—	—

Legend: x = unknown, u = unchanged, q = value depends on condition, - = unimplemented, read as '0', r = reserved.
Shaded locations are unimplemented, read as '0'.

Note 1: These registers can be addressed from any bank.
2: Unimplemented, read as '1'.
3: PIC16(L)F1784/7 only.
4: PIC16F1784/6/7 only.

© 2012-2014 Microchip Technology Inc.

TABLE 3-12: SPECIAL FUNCTION REGISTER SUMMARY (CONTINUED)

Addr	Name	Bit 7	Bit 6	Bit 5	Bit 4	Bit 3	Bit 2	Bit 1	Bit 0	Value on POR, BOR	Value on all other Resets
Bank 11-15											
x0Ch or x8Ch to x6Fh or xEFh	—	Unimplemented								—	—

Legend: x = unknown, u = unchanged, q = value depends on condition, - = unimplemented, read as '0', r = reserved. Shaded locations are unimplemented, read as '0'.

Note 1: These registers can be addressed from any bank.

2: Unimplemented, read as '1'.

3: PIC16(L)F1784/7 only.

4: PIC16F1784/6/7 only.

TABLE 3-12: SPECIAL FUNCTION REGISTER SUMMARY (CONTINUED)

Addr	Name	Bit 7	Bit 6	Bit 5	Bit 4	Bit 3	Bit 2	Bit 1	Bit 0	Value on POR, BOR	Value on all other Resets
Bank 16											
80Ch — 810h	—	Unimplemented								—	—
811h	PSMC1CON	PSMC1EN	PSMC1LD	PSMC1DBFE	PSMC1DBRE	P1MODE<3:0>				0000 0000	0000 0000
812h	PSMC1MDL	P1MDLEN	P1MDLPOL	P1MDLBIT	—	P1MSRC<3:0>				000- 0000	000- 0000
813h	PSMC1SYNC	P1POFST	P1PRPOL	P1DCPOL	—	—	—	P1SYNC<1:0>		000- --00	000- --00
814h	PSMC1CLK	—	—	P1CPRE<1:0>		—	—	P1CSRC<1:0>		--00 --00	--00 --00
815h	PSMC1OEN	—	—	P1OEF	P1OEE	P1OED	P1OEC	P1OEB	P1OEA	--00 0000	--00 0000
816h	PSMC1POL	—	P1INPOL	P1POLF	P1POLE	P1POLD	P1POLC	P1POLB	P1POLA	-000 0000	-000 0000
817h	PSMC1BLNK	—	—	P1FEBM<1:0>		—	—	P1REBM<1:0>		--00 --00	--00 --00
818h	PSMC1REBS	P1REBIN	—	—	P1REBSC4	P1REBSC3	P1REBSC2	P1REBSC1	—	0--0 000-	0--0 000-
819h	PSMC1FEBS	P1FEBIN	—	—	P1FEBSC4	P1FEBSC3	P1FEBSC2	P1FEBSC1	—	0--0 000-	0--0 000-
81Ah	PSMC1PHS	P1PHSIN	—	—	P1PHSC4	P1PHSC3	P1PHSC2	P1PHSC1	P1PHST	0--0 0000	0--0 0000
81Bh	PSMC1DCS	P1DCSIN	—	—	P1DCSC4	P1DCSC3	P1DCSC2	P1DCSC1	P1DCST	0--0 0000	0--0 0000
81Ch	PSMC1PRS	P1PRSIN	—	—	P1PRSC4	P1PRSC3	P1PRSC2	P1PRSC1	P1PRST	0--0 0000	0--0 0000
81Dh	PSMC1ASDC	P1ASE	P1ASDEN	P1ARSEN	—	—	—	—	P1ASDOV	000- ---0	000- ---0
81Eh	PSMC1ASDL	—	—	P1ASDLF	P1ASDLE	P1ASDLD	P1ASDLC	P1ASDLB	P1ASDLA	--00 0000	--00 0000
81Fh	PSMC1ASDS	P1ASDSIN	—	—	P1ASDSC4	P1ASDSC3	P1ASDSC2	P1ASDSC1	—	0--0 000-	0--0 000-
820h	PSMC1INT	P1TOVIE	P1TPHIE	P1TDCIE	P1TPRIE	P1TOVIF	P1TPHIF	P1TDCIF	P1TPRIF	0000 0000	0000 0000
821h	PSMC1PHL	Phase Low Count								0000 0000	0000 0000
822h	PSMC1PHH	Phase High Count								0000 0000	0000 0000
823h	PSMC1DCL	Duty Cycle Low Count								0000 0000	0000 0000
824h	PSMC1DCH	Duty Cycle High Count								0000 0000	0000 0000
825h	PSMC1PRL	Period Low Count								0000 0000	0000 0000
826h	PSMC1PRH	Period High Count								0000 0000	0000 0000
827h	PSMC1TMRL	Time base Low Counter								0000 0001	0000 0001
828h	PSMC1TMRH	Time base High Counter								0000 0000	0000 0000
829h	PSMC1DBR	rising Edge Dead-band Counter								0000 0000	0000 0000
82Ah	PSMC1DBF	Falling Edge Dead-band Counter								0000 0000	0000 0000
82Bh	PSMC1BLKR	rising Edge Blanking Counter								0000 0000	0000 0000
82Ch	PSMC1BLKF	Falling Edge Blanking Counter								0000 0000	0000 0000
82Dh	PSMC1FFA	—	—	—	—	Fractional Frequency Adjust Register				---- 0000	---- 0000
82Eh	PSMC1STR0	—	—	P1STRF	P1STRE	P1STRD	P1STRC	P1STRB	P1STRA	--00 0001	--00 0001
82Fh	PSMC1STR1	P1SYNC	—	—	—	—	—	P1LSMEN	P1HSMEN	0--- --00	0--- --00
830h	—	Unimplemented								—	—

Legend: x = unknown, u = unchanged, q = value depends on condition, - = unimplemented, read as '0', r = reserved.
Shaded locations are unimplemented, read as '0'.

Note 1: These registers can be addressed from any bank.
2: Unimplemented, read as '1'.
3: PIC16(L)F1784/7 only.
4: PIC16F1784/6/7 only.

© 2012-2014 Microchip Technology Inc.

TABLE 3-12: SPECIAL FUNCTION REGISTER SUMMARY (CONTINUED)

Addr	Name	Bit 7	Bit 6	Bit 5	Bit 4	Bit 3	Bit 2	Bit 1	Bit 0	Value on POR, BOR	Value on all other Resets
Bank 16 (Continued)											
831h	PSMC2CON	PSMC2EN	PSMC2LD	PSMC2DBFE	PSMC2DBRE	P2MODE<3:0>				0000 0000	0000 0000
832h	PSMC2MDL	P2MDLEN	P2MDLPOL	P2MDLBIT	—	P2MSRC<3:0>				000- 0000	000- 0000
833h	PSMC2SYNC	P2POFST	P2PRPOL	P2DCPOL	—	—	—	P2SYNC<1:0>		000- --00	000- --00
834h	PSMC2CLK	—	—	P2CPRE<1:0>		—	—	P2CSRC<1:0>		--00 --00	--00 --00
835h	PSMC2OEN	—	—	—	—	—	—	P2OEB	P2OEA	---- --00	---- --00
836h	PSMC2POL	—	P2INPOL	—	—	—	—	P2POLB	P2POLA	-0-- --00	-0-- --00
837h	PSMC2BLNK	—	—	P2FEBM<1:0>		—	—	P2REBM<1:0>		--00 --00	--00 --00
838h	PSMC2REBS	P2REBIN	—	—	P2REBSC4	P2REBSC3	P2REBSC2	P2REBSC1	—	0--0 000-	0--0 000-
839h	PSMC2FEBS	P2FEBIN	—	—	P2FEBSC4	P2FEBSC3	P2FEBSC2	P2FEBSC1	—	0--0 000-	0--0 000-
83Ah	PSMC2PHS	P2PHSIN	—	—	P2PHSC4	P2PHSC3	P2PHSC2	P2PHSC1	P2PHST	0--0 0000	0--0 0000
83Bh	PSMC2DCS	P2DCSIN	—	—	P2DCSC4	P2DCSC3	P2DCSC2	P2DCSC1	P2DCST	0--0 0000	0--0 0000
83Ch	PSMC2PRS	P2PRSIN	—	—	P2PRSC4	P2PRSC3	P2PRSC2	P2PRSC1	P2PRST	0--0 0000	0--0 0000
83Dh	PSMC2ASDC	P2ASE	P2ASDEN	P2ARSEN	—	—	—	—	P2ASDOV	000- ---0	000- ---0
83Eh	PSMC2ASDL	—	—	P2ASDLF	P2ASDLE	P2ASDLD	P2ASDLC	P2ASDLB	P2ASDLA	--00 0000	--00 0000
83Fh	PSMC2ASDS	P2ASDSIN	—	—	P2ASDSC4	P2ASDSC3	P2ASDSC2	P2ASDSC1	—	0--0 000-	0--0 000-
840h	PSMC2INT	P2TOVIE	P2TPHIE	P2TDCIE	P2TPRIE	P2TOVIF	P2TPHIF	P2TDCIF	P2TPRIF	0000 0000	0000 0000
841h	PSMC2PHL	Phase Low Count								0000 0000	0000 0000
842h	PSMC2PHH	Phase High Count								0000 0000	0000 0000
843h	PSMC2DCL	Duty Cycle Low Count								0000 0000	0000 0000
844h	PSMC2DCH	Duty Cycle High Count								0000 0000	0000 0000
845h	PSMC2PRL	Period Low Count								0000 0000	0000 0000
846h	PSMC2PRH	Period High Count								0000 0000	0000 0000
847h	PSMC2TMRL	Time base Low Counter								0000 0001	0000 0001
848h	PSMC2TMRH	Time base High Counter								0000 0000	0000 0000
849h	PSMC2DBR	rising Edge Dead-band Counter								0000 0000	0000 0000
84Ah	PSMC2DBF	Falling Edge Dead-band Counter								0000 0000	0000 0000
84Bh	PSMC2BLKR	rising Edge Blanking Counter								0000 0000	0000 0000
84Ch	PSMC2BLKF	Falling Edge Blanking Counter								0000 0000	0000 0000
84Dh	PSMC2FFA	—	—	—	—	Fractional Frequency Adjust Register				---- 0000	---- 0000
84Eh	PSMC2STR0	—	—	—	—	—	—	P2STRB	P2STRA	---- --01	---- --01
84Fh	PSMC2STR1	P2SYNC	—	—	—	—	—	P2LSMEN	P2HSMEN	0--- --00	0--- --00
850h	—	Unimplemented								—	—

Legend: x = unknown, u = unchanged, q = value depends on condition, - = unimplemented, read as '0', r = reserved. Shaded locations are unimplemented, read as '0'.

Note 1: These registers can be addressed from any bank.
2: Unimplemented, read as '1'.
3: PIC16(L)F1784/7 only.
4: PIC16F1784/6/7 only.

TABLE 3-12: SPECIAL FUNCTION REGISTER SUMMARY (CONTINUED)

Addr	Name	Bit 7	Bit 6	Bit 5	Bit 4	Bit 3	Bit 2	Bit 1	Bit 0	Value on POR, BOR	Value on all other Resets
Bank 16 (Continued)											
851h	PSMC3CON	PSMC3EN	PSMC3LD	P3DBFE	P3DBRE	P3MODE<3:0>				0000 0000	0000 0000
852h	PSMC3MDL	P3MDLEN	P3MDLPOL	P3MDLBIT	—	P3MSRC<3:0>				000- 0000	000- 0000
853h	PSMC3SYNC	P3POFST	P3PRPOL	P3DCPOL	—	—	—	P3SYNC<1:0>		000- --00	000- --00
854h	PSMC3CLK	—	—	P3CPRE<1:0>		—	—	P3CSRC<1:0>		--00 --00	--00 --00
855h	PSMC3OEN	—	—	—	—	—	—	P3OEB	P3OEA	---- --00	---- --00
856h	PSMC3POL	—	P3INPOL	—	—	—	—	P3POLB	P3POLA	-0-- --00	-0-- --00
857h	PSMC3BLNK	—	—	P3FEBM<1:0>		—	—	P3REBM<1:0>		--00 --00	--00 --00
858h	PSMC3REBS	P3REBSIN	—	—	P3REBSC4	P3REBSC3	P3REBSC2	P3REBSC1	—	0--0 000-	0--0 000-
859h	PSMC3FEBS	P3FEBSIN	—	—	P3FEBSC4	P3FEBSC3	P3FEBSC2	P3FEBSC1	—	0--0 000-	0--0 000-
85Ah	PSMC3PHS	P3PHSIN	—	—	P3PHSC4	P3PHSC3	P3PHSC2	P3PHSC1	P3PHST	0--0 0000	0--0 0000
85Bh	PSMC3DCS	P3DCSIN	—	—	P3DCSC4	P3DCSC3	P3DCSC2	P3DCSC1	P3DCST	0--0 0000	0--0 0000
85Ch	PSMC3PRS	P3PRSIN	—	—	P3PRSC4	P3PRSC3	P3PRSC2	P3PRSC1	P3PRST	0--0 0000	0--0 0000
85Dh	PSMC3ASDC	P3ASE	P3ASDEN	P3ARSEN	—	—	—	—	P3ASDOV	000- ---0	000- ---0
85Eh	PSMC3ASDL	—	—	—	—	—	—	P3ASDLB	P3ASDLA	---- --00	---- --00
85Fh	PSMC3ASDS	P3ASDSIN	—	—	P3ASDSC4	P3ASDSC3	P3ASDSC2	P3ASDSC1	—	0--0 000-	0--0 000-
860h	PSMC3INT	P3TOVIE	P3TPHIE	P3TDCIE	P3TPRIE	P3TOVIF	P3TPHIF	P3TDCIF	P3TPRIF	0000 0000	0000 0000
861h	PSMC3PHL	Phase Low Count								0000 0000	0000 0000
862h	PSMC3PHH	Phase High Count								0000 0000	0000 0000
863h	PSMC3DCL	Duty Cycle Low Count								0000 0000	0000 0000
864h	PSMC3DCH	Duty Cycle High Count								0000 0000	0000 0000
865h	PSMC3PRL	Period Low Count								0000 0000	0000 0000
866h	PSMC3PRH	Period High Count								0000 0000	0000 0000
867h	PSMC3TMRL	Time base Low Counter								0000 0001	0000 0001
868h	PSMC3TMRH	Time base High Counter								0000 0000	0000 0000
869h	PSMC3DBR	Rising Edge Dead-band Counter								0000 0000	0000 0000
86Ah	PSMC3DBF	Falling Edge Dead-band Counter								0000 0000	0000 0000
86Bh	PSMC3BLKR	Rising Edge Blanking Counter								0000 0000	0000 0000
86Ch	PSMC3BLKF	Falling Edge Blanking Counter								0000 0000	0000 0000
86Dh	PSMC3FFA	—	—	—	—	Fractional Frequency Adjust Register				---- 0000	---- 0000
86Eh	PSMC3STR0	—	—	—	—	—	—	P3STRB	P3STRA	---- --01	---- --01
86Fh	PSMC3STR1	P3SSYNC	—	—	—	—	—	P3LSMEN	P3HSMEN	0--- --00	0--- --00
Bank 17-30											
x0Ch or x8Ch to x1Fh or x9Fh	—	Unimplemented								—	—

Legend: x = unknown, u = unchanged, q = value depends on condition, - = unimplemented, read as '0', r = reserved.
Shaded locations are unimplemented, read as '0'.

Note 1: These registers can be addressed from any bank.
2: Unimplemented, read as '1'.
3: PIC16(L)F1784/7 only.
4: PIC16F1784/6/7 only.

© 2012-2014 Microchip Technology Inc.

TABLE 3-12: SPECIAL FUNCTION REGISTER SUMMARY (CONTINUED)

Addr	Name	Bit 7	Bit 6	Bit 5	Bit 4	Bit 3	Bit 2	Bit 1	Bit 0	Value on POR, BOR	Value on all other Resets
Bank 31											
F8Ch to FE3h	—	Unimplemented								—	—
FE4h	STATUS_ SHAD	—	—	—	—	—	Z	DC	C	---- -xxx	---- -uuu
FE5h	WREG_SHAD	Working Register Shadow								xxxx xxxx	uuuu uuuu
FE6h	BSR_SHAD	—	—	—	Bank Select Register Shadow					---x xxxx	---u uuuu
FE7h	PCLATH_ SHAD	—	Program Counter Latch High Register Shadow							-xxx xxxx	uuuu uuuu
FE8h	FSR0L_SHAD	Indirect Data Memory Address 0 Low Pointer Shadow								xxxx xxxx	uuuu uuuu
FE9h	FSR0H_ SHAD	Indirect Data Memory Address 0 High Pointer Shadow								xxxx xxxx	uuuu uuuu
FEAh	FSR1L_SHAD	Indirect Data Memory Address 1 Low Pointer Shadow								xxxx xxxx	uuuu uuuu
FEBh	FSR1H_ SHAD	Indirect Data Memory Address 1 High Pointer Shadow								xxxx xxxx	uuuu uuuu
FECh	—	Unimplemented								—	—
FEDh	STKPTR	—	—	—	Current Stack Pointer					---1 1111	---1 1111
FEEh	TOSL	Top of Stack Low byte								xxxx xxxx	uuuu uuuu
FEFh	TOSH	—	Top of Stack High byte							-xxx xxxx	-uuu uuuu

Legend: x = unknown, u = unchanged, q = value depends on condition, - = unimplemented, read as '0', r = reserved.
Shaded locations are unimplemented, read as '0'.

Note 1: These registers can be addressed from any bank.
2: Unimplemented, read as '1'.
3: PIC16(L)F1784/7 only.
4: PIC16F1784/6/7 only.

3.4 PCL and PCLATH

The Program Counter (PC) is 15 bits wide. The low byte comes from the PCL register, which is a readable and writable register. The high byte (PC<14:8>) is not directly readable or writable and comes from PCLATH. On any Reset, the PC is cleared. Figure 3-4 shows the five situations for the loading of the PC.

FIGURE 3-4: LOADING OF PC IN DIFFERENT SITUATIONS

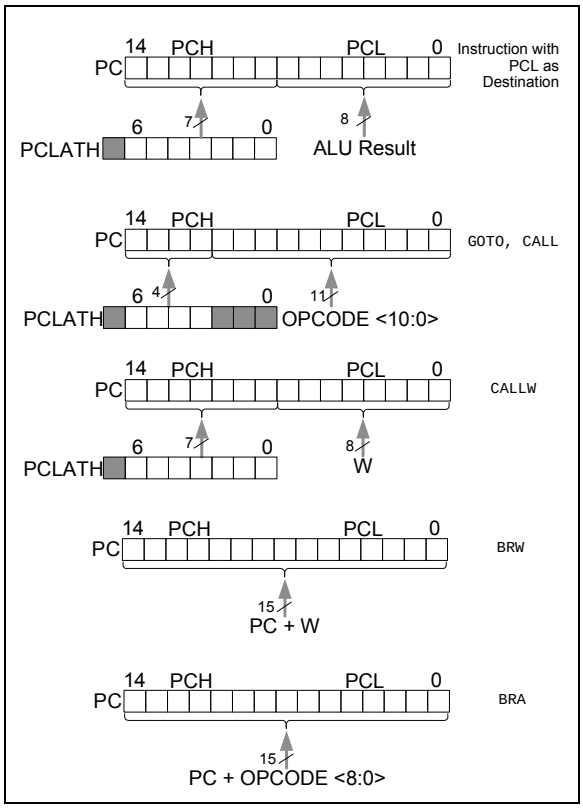

3.4.1 MODIFYING PCL

Executing any instruction with the PCL register as the destination simultaneously causes the Program Counter PC<14:8> bits (PCH) to be replaced by the contents of the PCLATH register. This allows the entire contents of the program counter to be changed by writing the desired upper 7 bits to the PCLATH register. When the lower 8 bits are written to the PCL register, all 15 bits of the program counter will change to the values contained in the PCLATH register and those being written to the PCL register.

3.4.2 COMPUTED GOTO

A computed GOTO is accomplished by adding an offset to the program counter (ADDWF PCL). When performing a table read using a computed GOTO method, care should be exercised if the table location crosses a PCL memory boundary (each 256-byte block). Refer to Application Note AN556, *"Implementing a Table Read"* (DS00556).

3.4.3 COMPUTED FUNCTION CALLS

A computed function CALL allows programs to maintain tables of functions and provide another way to execute state machines or look-up tables. When performing a table read using a computed function CALL, care should be exercised if the table location crosses a PCL memory boundary (each 256-byte block).

If using the CALL instruction, the PCH<2:0> and PCL registers are loaded with the operand of the CALL instruction. PCH<6:3> is loaded with PCLATH<6:3>.

The CALLW instruction enables computed calls by combining PCLATH and W to form the destination address. A computed CALLW is accomplished by loading the W register with the desired address and executing CALLW. The PCL register is loaded with the value of W and PCH is loaded with PCLATH.

3.4.4 BRANCHING

The branching instructions add an offset to the PC. This allows relocatable code and code that crosses page boundaries. There are two forms of branching, BRW and BRA. The PC will have incremented to fetch the next instruction in both cases. When using either branching instruction, a PCL memory boundary may be crossed.

If using BRW, load the W register with the desired unsigned address and execute BRW. The entire PC will be loaded with the address PC + 1 + W.

If using BRA, the entire PC will be loaded with PC + 1 +, the signed value of the operand of the BRA instruction.

© 2012-2014 Microchip Technology Inc.

3.5 Stack

All devices have a 16-level x 15-bit wide hardware stack (refer to Figures 3-1 and 3-2). The stack space is not part of either program or data space. The PC is PUSHed onto the stack when `CALL` or `CALLW` instructions are executed or an interrupt causes a branch. The stack is POPed in the event of a `RETURN`, `RETLW` or a `RETFIE` instruction execution. PCLATH is not affected by a PUSH or POP operation.

The stack operates as a circular buffer if the STVREN bit is programmed to '`0`' (Configuration Words). This means that after the stack has been PUSHed sixteen times, the seventeenth PUSH overwrites the value that was stored from the first PUSH. The eighteenth PUSH overwrites the second PUSH (and so on). The STKOVF and STKUNF flag bits will be set on an Overflow/Underflow, regardless of whether the Reset is enabled.

Note:	There are no instructions/mnemonics called PUSH or POP. These are actions that occur from the execution of the `CALL`, `CALLW`, `RETURN`, `RETLW` and `RETFIE` instructions or the vectoring to an interrupt address.

3.5.1 ACCESSING THE STACK

The stack is available through the TOSH, TOSL and STKPTR registers. STKPTR is the current value of the Stack Pointer. TOSH:TOSL register pair points to the TOP of the stack. Both registers are read/writable. TOS is split into TOSH and TOSL due to the 15-bit size of the PC. To access the stack, adjust the value of STKPTR, which will position TOSH:TOSL, then read/write to TOSH:TOSL. STKPTR is 5 bits to allow detection of overflow and underflow.

Note:	Care should be taken when modifying the STKPTR while interrupts are enabled.

During normal program operation, `CALL`, `CALLW` and interrupts will increment STKPTR while `RETLW`, `RETURN`, and `RETFIE` will decrement STKPTR. At any time, STKPTR can be inspected to see how much stack is left. The STKPTR always points at the currently used place on the stack. Therefore, a `CALL` or `CALLW` will increment the STKPTR and then write the PC, and a return will unload the PC and then decrement the STKPTR.

Reference Figure 3-5 through Figure 3-8 for examples of accessing the stack.

FIGURE 3-5: ACCESSING THE STACK EXAMPLE 1

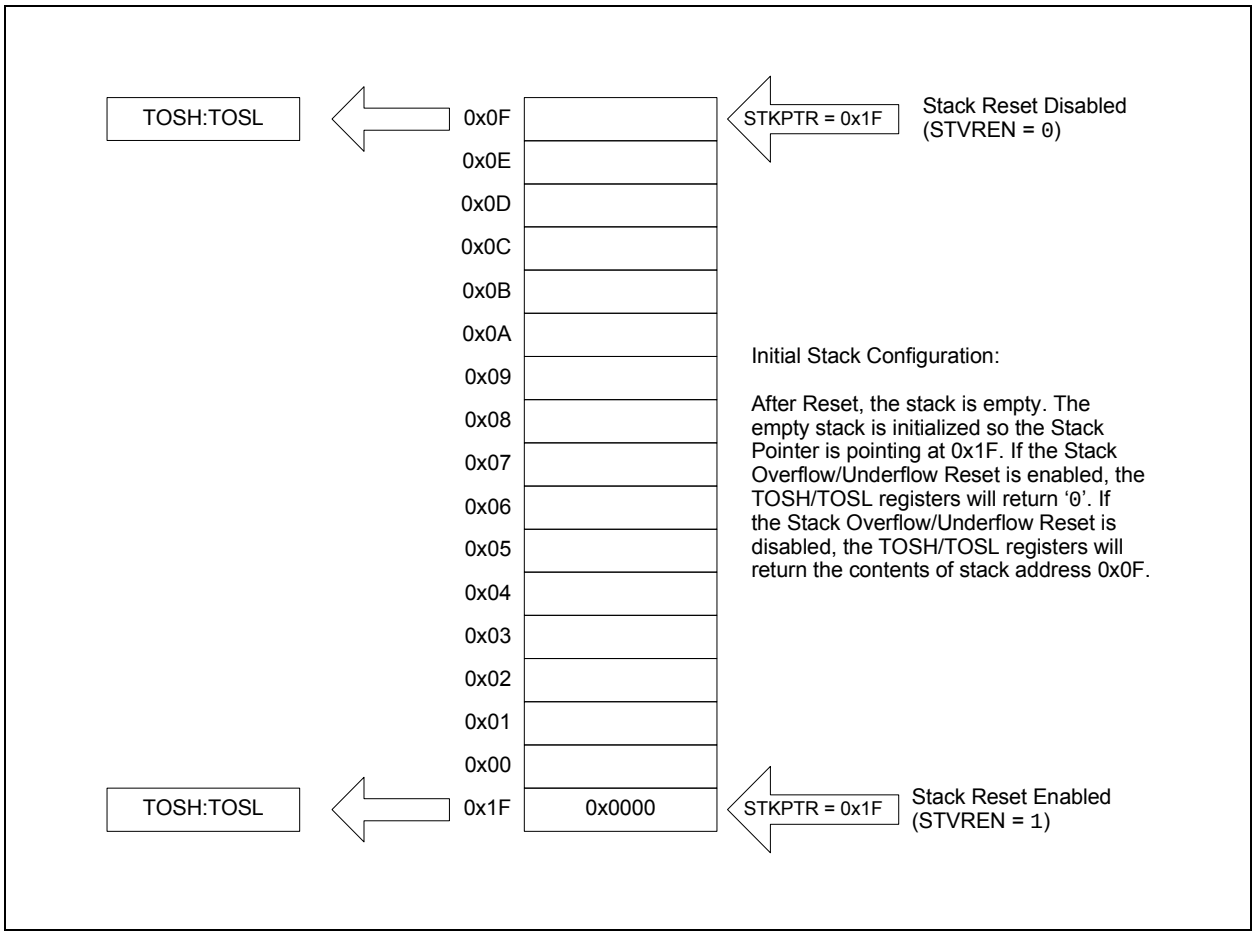

FIGURE 3-6: ACCESSING THE STACK EXAMPLE 2

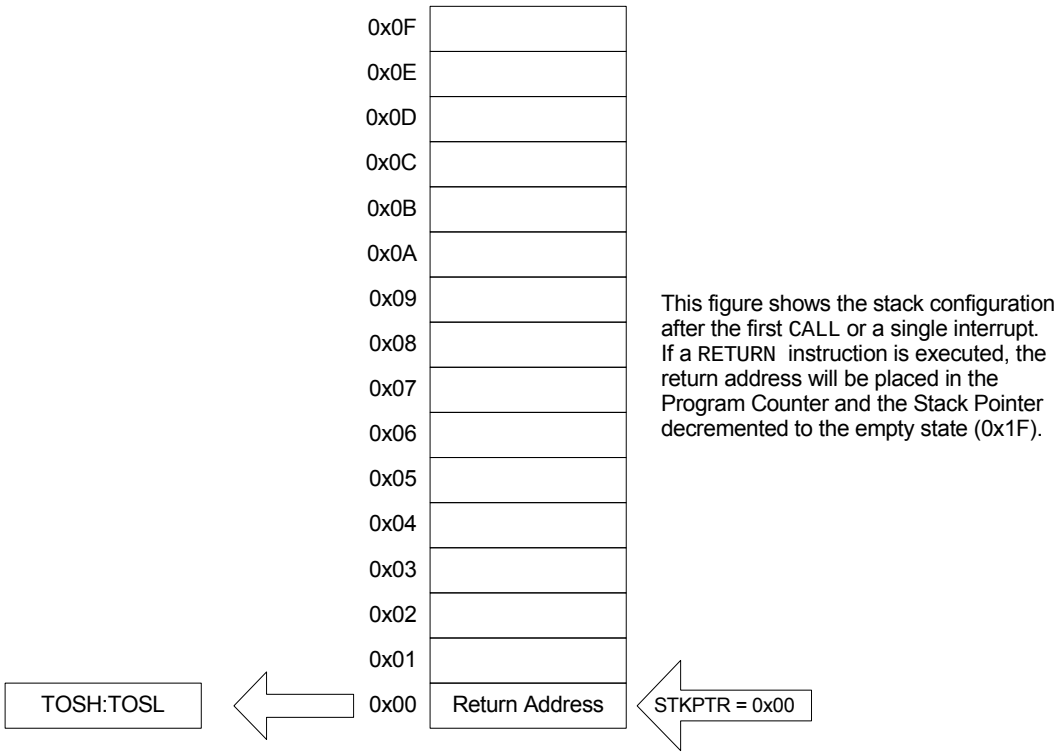

FIGURE 3-7: ACCESSING THE STACK EXAMPLE 3

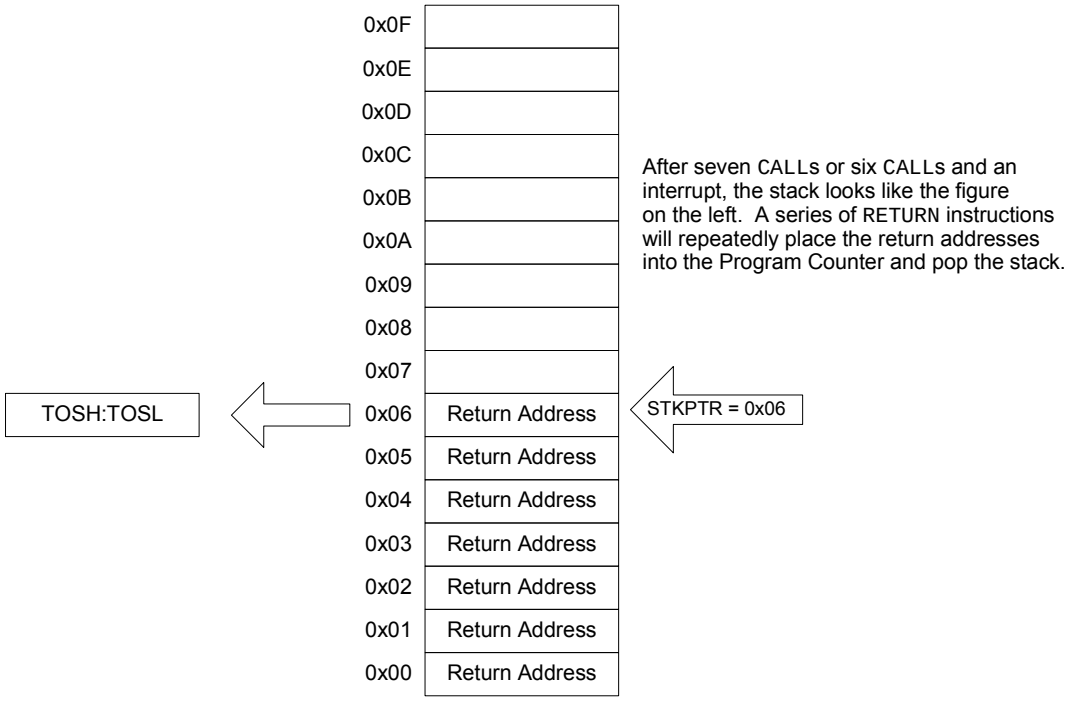

© 2012-2014 Microchip Technology Inc.

FIGURE 3-8: ACCESSING THE STACK EXAMPLE 4

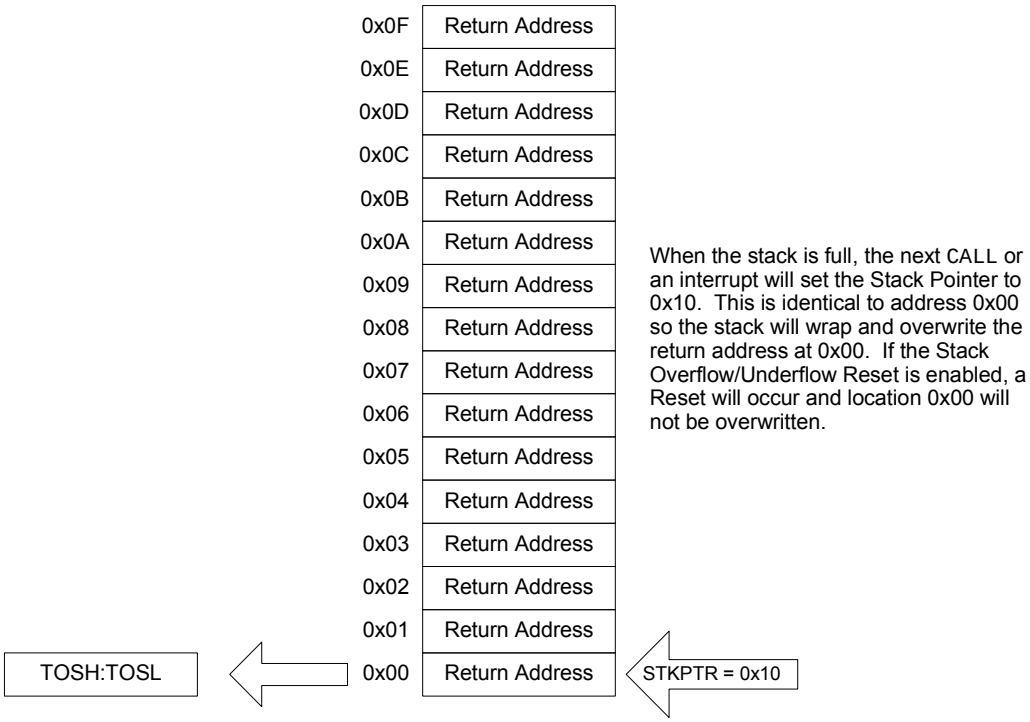

3.5.2 OVERFLOW/UNDERFLOW RESET

If the STVREN bit in Configuration Words is programmed to ‘1’, the device will be reset if the stack is PUSHed beyond the sixteenth level or POPed beyond the first level, setting the appropriate bits (STKOVF or STKUNF, respectively) in the PCON register.

3.6 Indirect Addressing

The INDFn registers are not physical registers. Any instruction that accesses an INDFn register actually accesses the register at the address specified by the File Select Registers (FSR). If the FSRn address specifies one of the two INDFn registers, the read will return ‘0’ and the write will not occur (though Status bits may be affected). The FSRn register value is created by the pair FSRnH and FSRnL.

The FSR registers form a 16-bit address that allows an addressing space with 65536 locations. These locations are divided into three memory regions:

- Traditional Data Memory
- Linear Data Memory
- Program Flash Memory

FIGURE 3-9: INDIRECT ADDRESSING

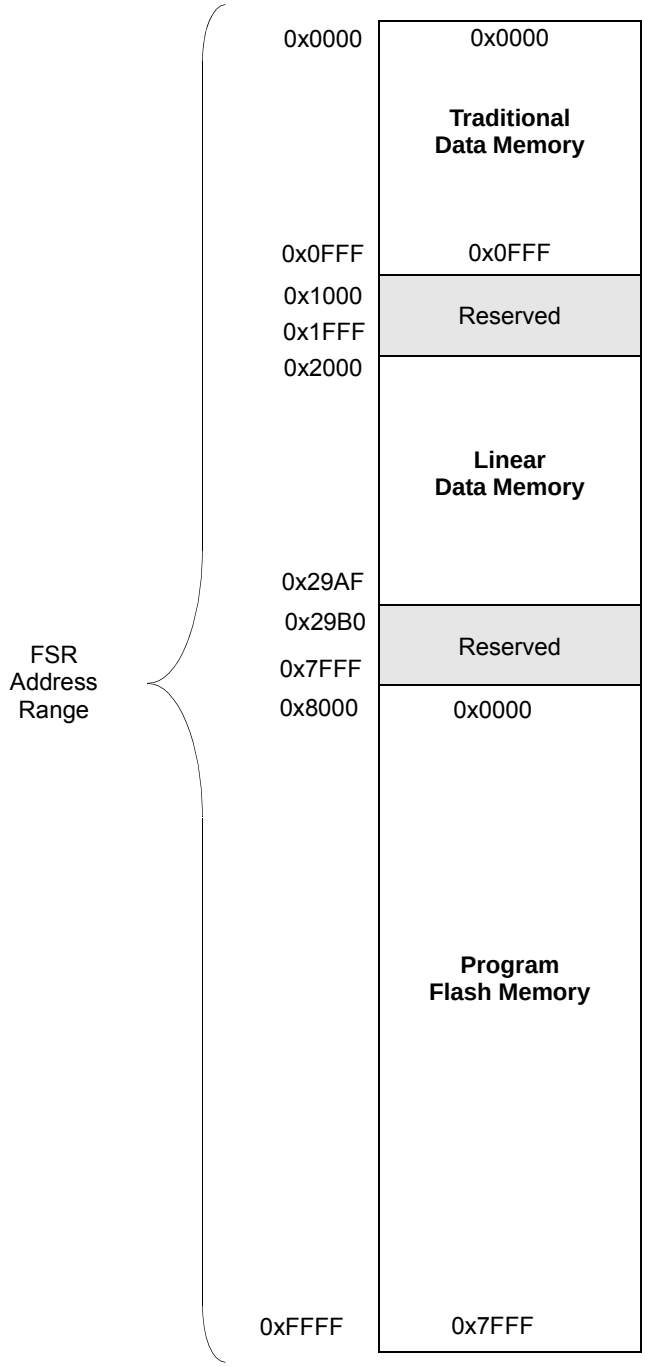

Note: Not all memory regions are completely implemented. Consult device memory tables for memory limits.

© 2012-2014 Microchip Technology Inc.

3.6.1 TRADITIONAL DATA MEMORY

The traditional data memory is a region from FSR address 0x000 to FSR address 0xFFF. The addresses correspond to the absolute addresses of all SFR, GPR and common registers.

FIGURE 3-10: TRADITIONAL DATA MEMORY MAP

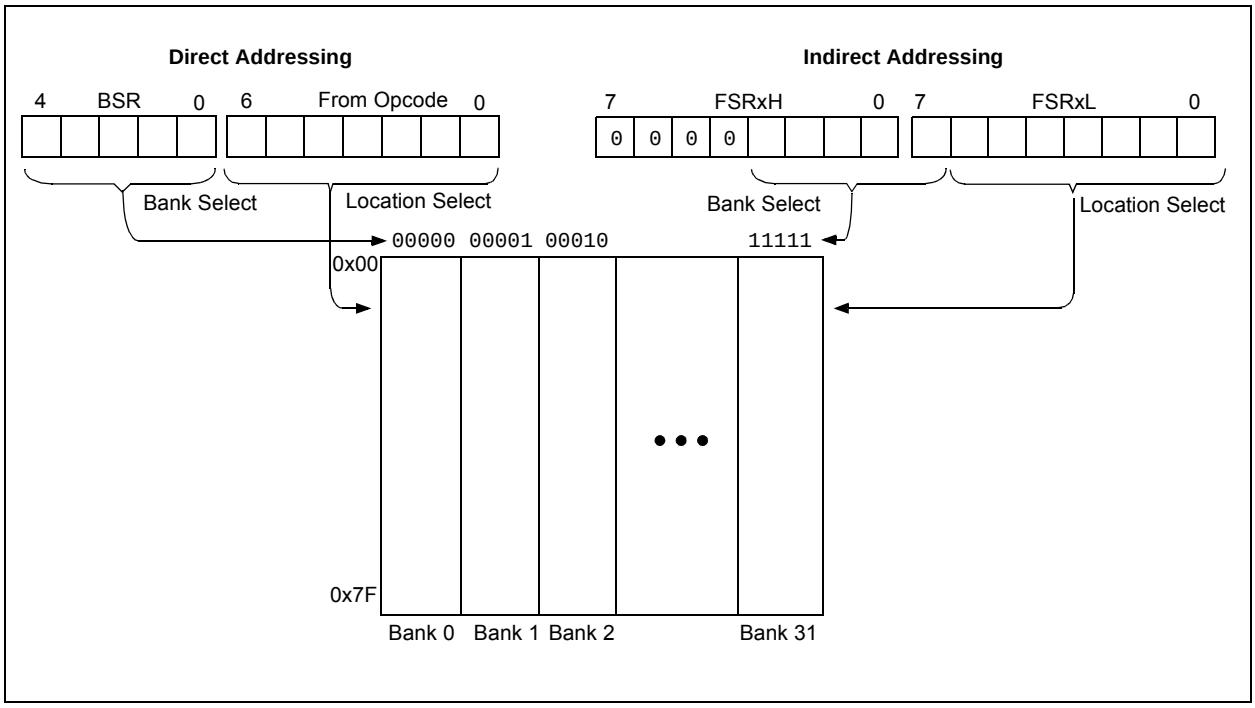

3.6.2 LINEAR DATA MEMORY

The linear data memory is the region from FSR address 0x2000 to FSR address 0x29AF. This region is a virtual region that points back to the 80-byte blocks of GPR memory in all the banks.

Unimplemented memory reads as 0x00. Use of the linear data memory region allows buffers to be larger than 80 bytes because incrementing the FSR beyond one bank will go directly to the GPR memory of the next bank.

The 16 bytes of common memory are not included in the linear data memory region.

FIGURE 3-11: LINEAR DATA MEMORY MAP

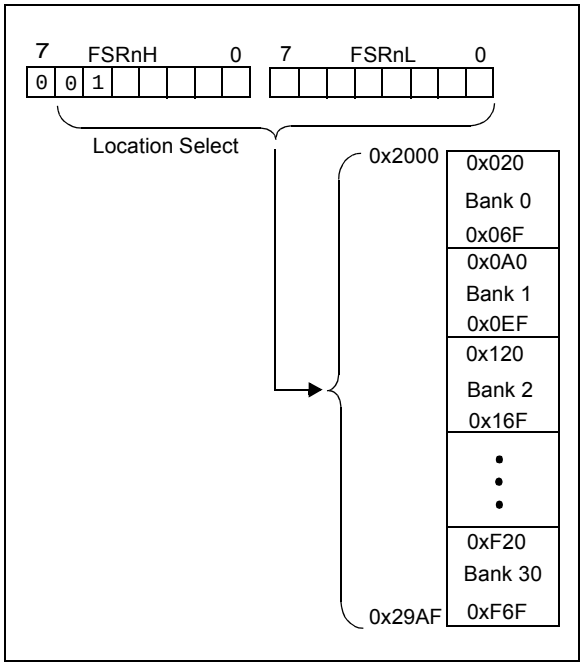

3.6.3 PROGRAM FLASH MEMORY

To make constant data access easier, the entire program Flash memory is mapped to the upper half of the FSR address space. When the MSB of FSRnH is set, the lower 15 bits are the address in program memory which will be accessed through INDF. Only the lower 8 bits of each memory location is accessible via INDF. Writing to the program Flash memory cannot be accomplished via the FSR/INDF interface. All instructions that access program Flash memory via the FSR/INDF interface will require one additional instruction cycle to complete.

FIGURE 3-12: PROGRAM FLASH MEMORY MAP

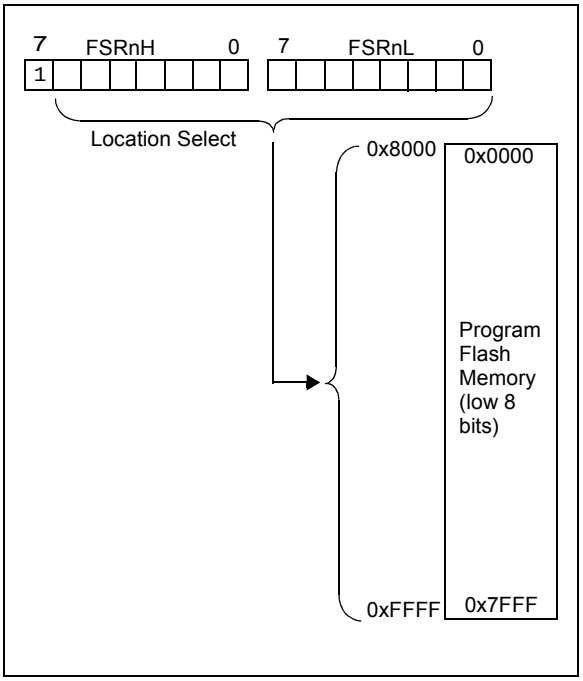

© 2012-2014 Microchip Technology Inc.

4.0 DEVICE CONFIGURATION

Device configuration consists of Configuration Words, Code Protection and Device ID.

4.1 Configuration Words

There are several Configuration Word bits that allow different oscillator and memory protection options. These are implemented as Configuration Word 1 at 8007h and Configuration Word 2 at 8008h.

Note:	The $\overline{\text{DEBUG}}$ bit in Configuration Words is managed automatically by device development tools including debuggers and programmers. For normal device operation, this bit should be maintained as a ‘1’.

4.2 Register Definitions: Configuration Words

REGISTER 4-1: CONFIG1: CONFIGURATION WORD 1

R/P-1	R/P-1	R/P-1	R/P-1	R/P-1	R/P-1
FCMEN	IESO	$\overline{\text{CLKOUTEN}}$	BOREN<1:0>		$\overline{\text{CPD}}$
bit 13					bit 8

R/P-1	R/P-1	R/P-1	R/P-1	R/P-1	R/P-1	R/P-1	R/P-1
$\overline{\text{CP}}$	MCLRE	$\overline{\text{PWRTE}}$	WDTE<1:0>		FOSC<2:0>		
bit 7							bit 0

Legend:		
R = Readable bit	P = Programmable bit	U = Unimplemented bit, read as ‘1’
‘0’ = Bit is cleared	‘1’ = Bit is set	-n = Value when blank or after Bulk Erase

bit 13 **FCMEN:** Fail-Safe Clock Monitor Enable bit
1 = Fail-Safe Clock Monitor and internal/external switchover are both enabled.
0 = Fail-Safe Clock Monitor is disabled

bit 12 **IESO:** Internal External Switchover bit
1 = Internal/External Switchover mode is enabled
0 = Internal/External Switchover mode is disabled

bit 11 **$\overline{\text{CLKOUTEN}}$:** Clock Out Enable bit
If FOSC configuration bits are set to LP, XT, HS modes:
This bit is ignored, CLKOUT function is disabled. Oscillator function on the CLKOUT pin.
All other FOSC modes:
1 = CLKOUT function is disabled. I/O function on the CLKOUT pin.
0 = CLKOUT function is enabled on the CLKOUT pin

bit 10-9 **BOREN<1:0>:** Brown-out Reset Enable bits
11 = BOR enabled
10 = BOR enabled during operation and disabled in Sleep
01 = BOR controlled by SBOREN bit of the BORCON register
00 = BOR disabled

bit 8 **$\overline{\text{CPD}}$:** Data Code Protection bit(1)
1 = Data memory code protection is disabled
0 = Data memory code protection is enabled

bit 7 **$\overline{\text{CP}}$:** Code Protection bit
1 = Program memory code protection is disabled
0 = Program memory code protection is enabled

bit 6 **MCLRE:** $\overline{\text{MCLR}}$/VPP Pin Function Select bit
If LVP bit = 1:
This bit is ignored.
If LVP bit = 0:
1 = $\overline{\text{MCLR}}$/VPP pin function is $\overline{\text{MCLR}}$; Weak pull-up enabled.
0 = MCLR/VPP pin function is digital input; $\overline{\text{MCLR}}$ internally disabled; Weak pull-up under control of WPUE3 bit.

bit 5 **$\overline{\text{PWRTE}}$:** Power-up Timer Enable bit
1 = PWRT disabled
0 = PWRT enabled

bit 4-3 **WDTE<1:0>:** Watchdog Timer Enable bit
11 = WDT enabled
10 = WDT enabled while running and disabled in Sleep
01 = WDT controlled by the SWDTEN bit in the WDTCON register
00 = WDT disabled

© 2012-2014 Microchip Technology Inc.

REGISTER 4-1: CONFIG1: CONFIGURATION WORD 1 (CONTINUED)

bit 2-0 **FOSC<2:0>:** Oscillator Selection bits

111 = ECH: External Clock, High-Power mode (4-20 MHz): device clock supplied to CLKIN pin
110 = ECM: External Clock, Medium-Power mode (0.5-4 MHz): device clock supplied to CLKIN pin
101 = ECL: External Clock, Low-Power mode (0-0.5 MHz): device clock supplied to CLKIN pin
100 = INTOSC oscillator: I/O function on CLKIN pin
011 = EXTRC oscillator: External RC circuit connected to CLKIN pin
010 = HS oscillator: High-speed crystal/resonator connected between OSC1 and OSC2 pins
001 = XT oscillator: Crystal/resonator connected between OSC1 and OSC2 pins
000 = LP oscillator: Low-power crystal connected between OSC1 and OSC2 pins

Note 1: The entire data EEPROM will be erased when the code protection is turned off during an erase.Once the Data Code Protection bit is enabled, ($\overline{CPD}$ = 0), the Bulk Erase Program Memory Command (through ICSP) can disable the Data Code Protection ($\overline{CPD}$ =1). When a Bulk Erase Program Memory Command is executed, the entire Program Flash Memory, Data EEPROM and configuration memory will be erased.

REGISTER 4-2: CONFIG2: CONFIGURATION WORD 2

R/P-1	R/P-1	R/P-1	R/P-1	R/P-1	R/P-1
LVP	$\overline{\text{DEBUG}}$	$\overline{\text{LPBOR}}$	BORV	STVREN	PLLEN
bit 13					bit 8

U-1	U-1	R/P-1	U-1	U-1	U-1	R/P-1	R/P-1
—	—	$\overline{\text{VCAPEN}}$	—	—	—	WRT<1:0>	
bit 7							bit 0

Legend:		
R = Readable bit	P = Programmable bit	U = Unimplemented bit, read as ‘1’
‘0’ = Bit is cleared	‘1’ = Bit is set	-n = Value when blank or after Bulk Erase

bit 13 **LVP:** Low-Voltage Programming Enable bit[1]
1 = Low-voltage programming enabled
0 = High-voltage on $\overline{\text{MCLR}}$ must be used for programming

bit 12 **$\overline{\text{DEBUG}}$:** In-Circuit Debugger Mode bit[3]
1 = In-Circuit Debugger disabled, ICSPCLK and ICSPDAT are general purpose I/O pins
0 = In-Circuit Debugger enabled, ICSPCLK and ICSPDAT are dedicated to the debugger

bit 11 **$\overline{\text{LPBOR}}$:** Low-Power BOR Enable bit
1 = Low-Power Brown-out Reset is disabled
0 = Low-Power Brown-out Reset is enabled

bit 10 **BORV:** Brown-out Reset Voltage Selection bit[4]
1 = Brown-out Reset voltage (V_{BOR}), low trip point selected.
0 = Brown-out Reset voltage (V_{BOR}), high trip point selected.

bit 9 **STVREN:** Stack Overflow/Underflow Reset Enable bit
1 = Stack Overflow or Underflow will cause a Reset
0 = Stack Overflow or Underflow will not cause a Reset

bit 8 **PLLEN:** PLL Enable bit
1 = 4xPLL enabled
0 = 4xPLL disabled

bit 7-6 **Unimplemented:** Read as ‘1’

bit 5 **$\overline{\text{VCAPEN}}$:** Voltage Regulator Capacitor Enable bit[2]
1 = V_{CAP} functionality is disabled on RA6
0 = V_{CAP} functionality is enabled on RA6

bit 4-2 **Unimplemented:** Read as ‘1’

bit 1-0 **WRT<1:0>:** Flash Memory Self-Write Protection bits
4 kW Flash memory (PIC16(L)F1784 only):
11 = Write protection off
10 = 000h to 1FFh write-protected, 200h to FFFh may be modified by EECON control
01 = 000h to 7FFh write-protected, 800h to FFFh may be modified by EECON control
00 = 000h to FFFh write-protected, no addresses may be modified by EECON control
8 kW Flash memory (PIC16(L)F1786/7 only):
11 = Write protection off
10 = 0000h to 01FFh write-protected, 0200h to 1FFFh may be modified by EECON control
01 = 0000h to 0FFFh write-protected, 1000h to 1FFFh may be modified by EECON control
00 = 0000h to 1FFFh write-protected, no addresses may be modified by EECON control

Note 1: The LVP bit cannot be programmed to ‘0’ when Programming mode is entered via LVP.
2: Not implemented on “LF” devices.
3: The $\overline{\text{DEBUG}}$ bit in Configuration Words is managed automatically by device development tools including debuggers and programmers. For normal device operation, this bit should be maintained as a '1'.
4: See V_{BOR} parameter for specific trip point voltages.

© 2012-2014 Microchip Technology Inc.

4.3 Code Protection

Code protection allows the device to be protected from unauthorized access. Program memory protection and data EEPROM protection are controlled independently. Internal access to the program memory and data EEPROM are unaffected by any code protection setting.

4.3.1 PROGRAM MEMORY PROTECTION

The entire program memory space is protected from external reads and writes by the $\overline{CP}$ bit in Configuration Words. When $\overline{CP}$ = 0, external reads and writes of program memory are inhibited and a read will return all '0's. The CPU can continue to read program memory, regardless of the protection bit settings. Writing the program memory is dependent upon the write protection setting. See **Section 4.4 "Write Protection"** for more information.

4.3.2 DATA EEPROM PROTECTION

The entire data EEPROM is protected from external reads and writes by the $\overline{CPD}$ bit. When $\overline{CPD}$ = 0, external reads and writes of data EEPROM are inhibited. The CPU can continue to read and write data EEPROM regardless of the protection bit settings.

4.4 Write Protection

Write protection allows the device to be protected from unintended self-writes. Applications, such as bootloader software, can be protected while allowing other regions of the program memory to be modified.

The WRT<1:0> bits in Configuration Words define the size of the program memory block that is protected.

4.5 User ID

Four memory locations (8000h-8003h) are designated as ID locations where the user can store checksum or other code identification numbers. These locations are readable and writable during normal execution. See **Section 12.5 "User ID, Device ID and Configuration Word Access"**for more information on accessing these memory locations. For more information on checksum calculation, see the *"PIC16(L)F178X Memory Programming Specification"* (DS41457).

4.6 Device ID and Revision ID

The memory location 8006h is where the Device ID and Revision ID are stored. The upper nine bits hold the Device ID. The lower five bits hold the Revision ID. See **Section 12.5 "User ID, Device ID and Configuration Word Access"** for more information on accessing these memory locations.

Development tools, such as device programmers and debuggers, may be used to read the Device ID and Revision ID.

4.7 Register Definitions: Device and Revision

REGISTER 4-3: DEVID: DEVICE ID REGISTER

R	R	R	R	R	R
DEV<8:3>					
bit 13					bit 8

R	R	R	R	R	R	R	R
DEV<2:0>			REV<4:0>				
bit 7							bit 0

Legend:	
R = Readable bit	
'1' = Bit is set	'0' = Bit is cleared

bit 13-5 **DEV<8:0>:** Device ID bits

Device	DEVICEID<13:0> Values	
	DEV<8:0>	REV<4:0>
PIC16F1784	10 1010 010	x xxxx
PIC16LF1784	10 1010 111	x xxxx
PIC16F1786	10 1010 011	x xxxx
PIC16LF1786	10 1011 000	x xxxx
PIC16F1787	10 1010 100	x xxxx
PIC16LF1787	10 1011 001	x xxxx

bit 4-0 **REV<4:0>:** Revision ID bits
These bits are used to identify the revision (see Table under DEV<8:0> above).

© 2012-2014 Microchip Technology Inc.

5.0 RESETS

There are multiple ways to reset this device:

- Power-On Reset (POR)
- Brown-Out Reset (BOR)
- Low-Power Brown-Out Reset (LPBOR)
- $\overline{\text{MCLR}}$ Reset
- WDT Reset
- RESET instruction
- Stack Overflow
- Stack Underflow
- Programming mode exit

To allow VDD to stabilize, an optional Power-up Timer can be enabled to extend the Reset time after a BOR or POR event.

A simplified block diagram of the On-Chip Reset Circuit is shown in Figure 5-1.

FIGURE 5-1: SIMPLIFIED BLOCK DIAGRAM OF ON-CHIP RESET CIRCUIT

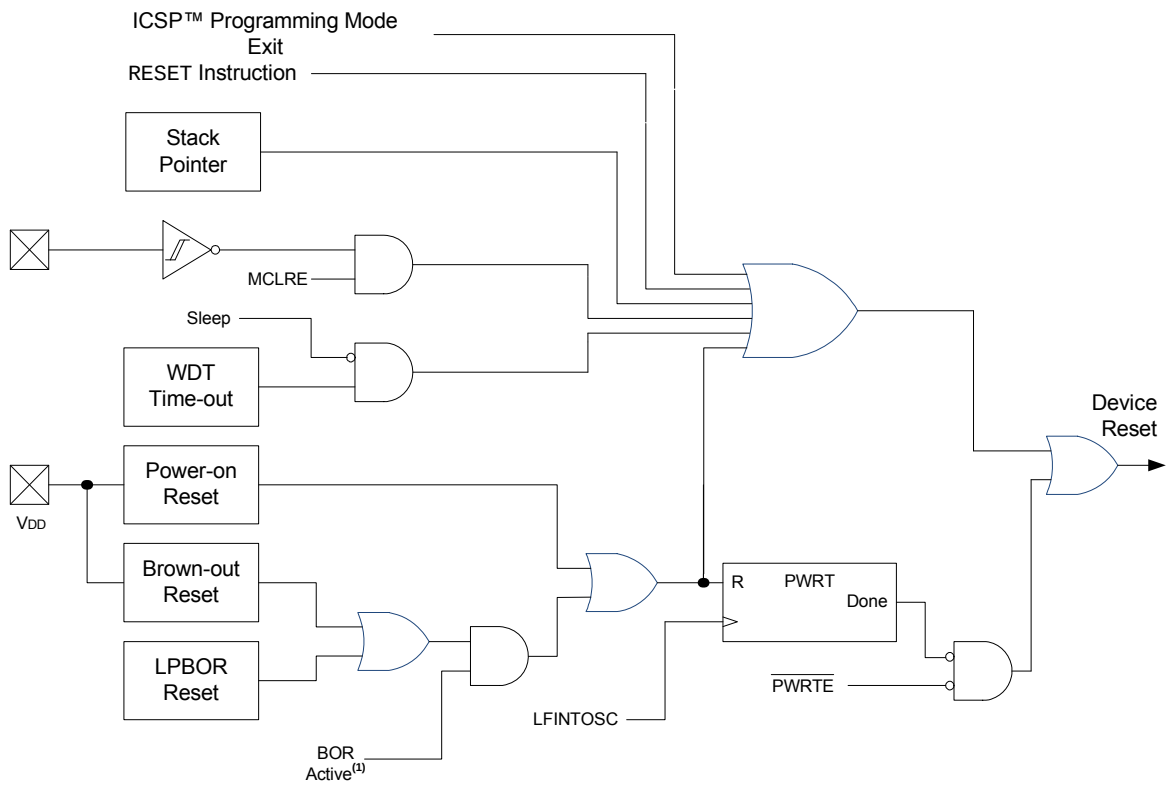

Note 1: See Table 5-1 for BOR active conditions.

5.1 Power-On Reset (POR)

The POR circuit holds the device in Reset until VDD has reached an acceptable level for minimum operation. Slow rising VDD, fast operating speeds or analog performance may require greater than minimum VDD. The PWRT, BOR or $\overline{\text{MCLR}}$ features can be used to extend the start-up period until all device operation conditions have been met.

5.1.1 POWER-UP TIMER (PWRT)

The Power-up Timer provides a nominal 64 ms time-out on POR or Brown-out Reset.

The device is held in Reset as long as PWRT is active. The PWRT delay allows additional time for the VDD to rise to an acceptable level. The Power-up Timer is enabled by clearing the $\overline{\text{PWRTE}}$ bit in Configuration Words.

The Power-up Timer starts after the release of the POR and BOR.

For additional information, refer to Application Note AN607, *"Power-up Trouble Shooting"* (DS00607).

5.2 Brown-Out Reset (BOR)

The BOR circuit holds the device in Reset when VDD reaches a selectable minimum level. Between the POR and BOR, complete voltage range coverage for execution protection can be implemented.

The Brown-out Reset module has four operating modes controlled by the BOREN<1:0> bits in Configuration Words. The four operating modes are:

- BOR is always on
- BOR is off when in Sleep
- BOR is controlled by software
- BOR is always off

Refer to Table 5-1 for more information.

The Brown-out Reset voltage level is selectable by configuring the BORV bit in Configuration Words.

A VDD noise rejection filter prevents the BOR from triggering on small events. If VDD falls below VBOR for a duration greater than parameter TBORDC, the device will reset. See Figure 5-2 for more information.

TABLE 5-1: BOR OPERATING MODES

BOREN<1:0>	SBOREN	Device Mode	BOR Mode	Instruction Execution upon: Release of POR or Wake-up from Sleep
11	X	X	Active	Waits for BOR ready(1) (BORRDY = 1)
10	X	Awake	Active	Waits for BOR ready (BORRDY = 1)
		Sleep	Disabled	
01	1	X	Active	Waits for BOR ready(1) (BORRDY = 1)
	0	X	Disabled	Begins immediately (BORRDY = x)
00	X	X	Disabled	

Note 1: In these specific cases, "Release of POR" and "Wake-up from Sleep", there is no delay in start-up. The BOR ready flag, (BORRDY = 1), will be set before the CPU is ready to execute instructions because the BOR circuit is forced on by the BOREN<1:0> bits.

5.2.1 BOR IS ALWAYS ON

When the BOREN bits of Configuration Words are programmed to '11', the BOR is always on. The device start-up will be delayed until the BOR is ready and VDD is higher than the BOR threshold.

BOR protection is active during Sleep. The BOR does not delay wake-up from Sleep.

5.2.2 BOR IS OFF IN SLEEP

When the BOREN bits of Configuration Words are programmed to '10', the BOR is on, except in Sleep. The device start-up will be delayed until the BOR is ready and VDD is higher than the BOR threshold.

BOR protection is not active during Sleep. The device wake-up will be delayed until the BOR is ready.

5.2.3 BOR CONTROLLED BY SOFTWARE

When the BOREN bits of Configuration Words are programmed to '01', the BOR is controlled by the SBOREN bit of the BORCON register. The device start-up is not delayed by the BOR ready condition or the VDD level.

BOR protection begins as soon as the BOR circuit is ready. The status of the BOR circuit is reflected in the BORRDY bit of the BORCON register.

BOR protection is unchanged by Sleep.

© 2012-2014 Microchip Technology Inc.

FIGURE 5-2: BROWN-OUT SITUATIONS

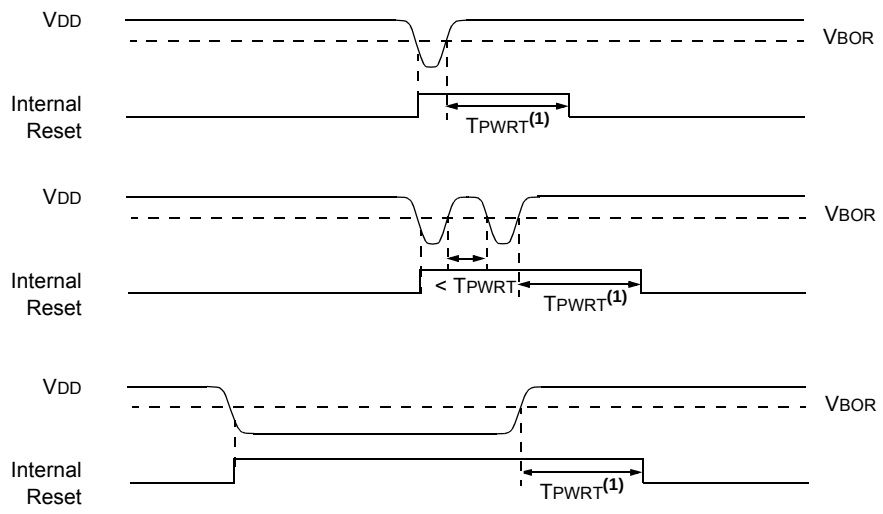

Note 1: TPWRT delay only if $\overline{\text{PWRTE}}$ bit is programmed to '0'.

5.3 Register Definitions: BOR Control

REGISTER 5-1: BORCON: BROWN-OUT RESET CONTROL REGISTER

R/W-1/u	R/W-0/u	U-0	U-0	U-0	U-0	U-0	R-q/u
SBOREN	BORFS	—	—	—	—	—	BORRDY
bit 7							bit 0

Legend:		
R = Readable bit	W = Writable bit	U = Unimplemented bit, read as '0'
u = Bit is unchanged	x = Bit is unknown	-n/n = Value at POR and BOR/Value at all other Resets
'1' = Bit is set	'0' = Bit is cleared	q = Value depends on condition

bit 7 **SBOREN:** Software Brown-out Reset Enable bit
If BOREN <1:0> in Configuration Words ≠ 01:
SBOREN is read/write, but has no effect on the BOR.
If BOREN <1:0> in Configuration Words = 01:
1 = BOR Enabled
0 = BOR Disabled

bit 6 **BORFS:** Brown-out Reset Fast Start bit(1)
If BOREN<1:0> = 11 (Always on) or BOREN<1:0> = 00 (Always off)
BORFS is Read/Write, but has no effect.
If BOREN <1:0> = 10 (Disabled in Sleep) or BOREN<1:0> = 01 (Under software control):
1 = Band gap is forced on always (covers sleep/wake-up/operating cases)
0 = Band gap operates normally, and may turn off

bit 5-1 **Unimplemented:** Read as '0'

bit 0 **BORRDY:** Brown-out Reset Circuit Ready Status bit
1 = The Brown-out Reset circuit is active
0 = The Brown-out Reset circuit is inactive

Note 1: BOREN<1:0> bits are located in Configuration Words.

5.4 Low-Power Brown-Out Reset (LPBOR)

The Low-Power Brown-Out Reset (LPBOR) is an essential part of the Reset subsystem. Refer to Figure 5-1 to see how the BOR interacts with other modules.

The LPBOR is used to monitor the external VDD pin. When too low of a voltage is detected, the device is held in Reset. When this occurs, a register bit ($\overline{BOR}$) is changed to indicate that a BOR Reset has occurred. The same bit is set for both the BOR and the LPBOR. Refer to Register 5-2.

5.4.1 ENABLING LPBOR

The LPBOR is controlled by the $\overline{LPBOR}$ bit of Configuration Words. When the device is erased, the LPBOR module defaults to disabled.

5.4.1.1 LPBOR Module Output

The output of the LPBOR module is a signal indicating whether or not a Reset is to be asserted. This signal is OR'd together with the Reset signal of the BOR module to provide the generic $\overline{BOR}$ signal, which goes to the PCON register and to the power control block.

5.5 $\overline{MCLR}$

The $\overline{MCLR}$ is an optional external input that can reset the device. The $\overline{MCLR}$ function is controlled by the MCLRE bit of Configuration Words and the LVP bit of Configuration Words (Table 5-2).

TABLE 5-2: $\overline{MCLR}$ CONFIGURATION

MCLRE	LVP	$\overline{MCLR}$
0	0	Disabled
1	0	Enabled
x	1	Enabled

5.5.1 $\overline{MCLR}$ ENABLED

When $\overline{MCLR}$ is enabled and the pin is held low, the device is held in Reset. The $\overline{MCLR}$ pin is connected to VDD through an internal weak pull-up.

The device has a noise filter in the $\overline{MCLR}$ Reset path. The filter will detect and ignore small pulses.

Note: A Reset does not drive the $\overline{MCLR}$ pin low.

5.5.2 $\overline{MCLR}$ DISABLED

When $\overline{MCLR}$ is disabled, the pin functions as a general purpose input and the internal weak pull-up is under software control. See **Section 13.11 "PORTE Registers"** for more information.

5.6 Watchdog Timer (WDT) Reset

The Watchdog Timer generates a Reset if the firmware does not issue a CLRWDT instruction within the time-out period. The $\overline{TO}$ and $\overline{PD}$ bits in the STATUS register are changed to indicate the WDT Reset. See **Section 11.0 "Watchdog Timer (WDT)"** for more information.

5.7 RESET Instruction

A RESET instruction will cause a device Reset. The $\overline{RI}$ bit in the PCON register will be set to '0'. See Table 5-4 for default conditions after a RESET instruction has occurred.

5.8 Stack Overflow/Underflow Reset

The device can reset when the Stack Overflows or Underflows. The STKOVF or STKUNF bits of the PCON register indicate the Reset condition. These Resets are enabled by setting the STVREN bit in Configuration Words. See **Section 5.8 "Stack Overflow/Underflow Reset"** for more information.

5.9 Programming Mode Exit

Upon exit of Programming mode, the device will behave as if a POR had just occurred.

5.10 Power-Up Timer

The Power-up Timer optionally delays device execution after a BOR or POR event. This timer is typically used to allow VDD to stabilize before allowing the device to start running.

The Power-up Timer is controlled by the $\overline{PWRTE}$ bit of Configuration Words.

5.11 Start-up Sequence

Upon the release of a POR or BOR, the following must occur before the device will begin executing:

1. Power-up Timer runs to completion (if enabled).
2. Oscillator start-up timer runs to completion (if required for oscillator source).
3. $\overline{MCLR}$ must be released (if enabled).

The total time-out will vary based on oscillator configuration and Power-up Timer configuration. See **Section 6.0 "Oscillator Module (with Fail-Safe Clock Monitor)"** for more information.

The Power-up Timer and oscillator start-up timer run independently of $\overline{MCLR}$ Reset. If $\overline{MCLR}$ is kept low long enough, the Power-up Timer and oscillator start-up timer will expire. Upon bringing $\overline{MCLR}$ high, the device will begin execution immediately (see Figure 5-3). This is useful for testing purposes or to synchronize more than one device operating in parallel.

© 2012-2014 Microchip Technology Inc.

FIGURE 5-3: RESET START-UP SEQUENCE

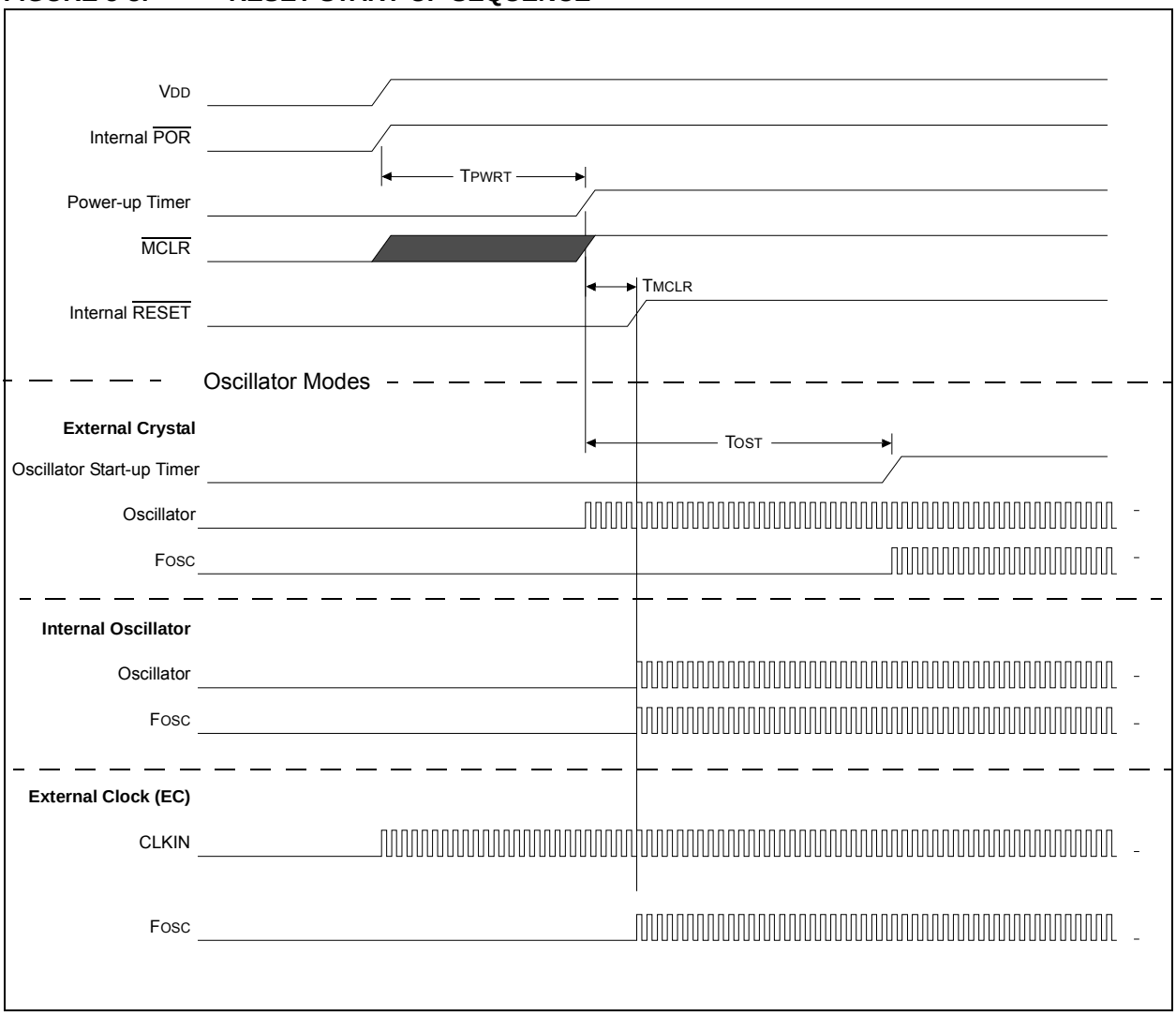

5.12 Determining the Cause of a Reset

Upon any Reset, multiple bits in the STATUS and PCON register are updated to indicate the cause of the Reset. Table 5-3 and Table 5-4 show the Reset conditions of these registers.

TABLE 5-3: RESET STATUS BITS AND THEIR SIGNIFICANCE

STKOVF	STKUNF	$\overline{\text{RWDT}}$	$\overline{\text{RMCLR}}$	$\overline{\text{RI}}$	$\overline{\text{POR}}$	$\overline{\text{BOR}}$	$\overline{\text{TO}}$	$\overline{\text{PD}}$	Condition
0	0	1	1	1	0	x	1	1	Power-on Reset
0	0	1	1	1	0	x	0	x	Illegal, $\overline{\text{TO}}$ is set on $\overline{\text{POR}}$
0	0	1	1	1	0	x	x	0	Illegal, $\overline{\text{PD}}$ is set on $\overline{\text{POR}}$
0	0	u	1	1	u	0	1	1	Brown-out Reset
u	u	0	u	u	u	u	0	u	WDT Reset
u	u	u	u	u	u	u	0	0	WDT Wake-up from Sleep
u	u	u	u	u	u	u	1	0	Interrupt Wake-up from Sleep
u	u	u	0	u	u	u	u	u	$\overline{\text{MCLR}}$ Reset during normal operation
u	u	u	0	u	u	u	1	0	$\overline{\text{MCLR}}$ Reset during Sleep
u	u	u	u	0	u	u	u	u	RESET Instruction Executed
1	u	u	u	u	u	u	u	u	Stack Overflow Reset (STVREN = 1)
u	1	u	u	u	u	u	u	u	Stack Underflow Reset (STVREN = 1)

TABLE 5-4: RESET CONDITION FOR SPECIAL REGISTERS

Condition	Program Counter	STATUS Register	PCON Register
Power-on Reset	0000h	---1 1000	00-- 110x
$\overline{\text{MCLR}}$ Reset during normal operation	0000h	---u uuuu	uu-- 0uuu
$\overline{\text{MCLR}}$ Reset during Sleep	0000h	---1 0uuu	uu-- 0uuu
WDT Reset	0000h	---0 uuuu	uu-- uuuu
WDT Wake-up from Sleep	PC + 1	---0 0uuu	uu-- uuuu
Brown-out Reset	0000h	---1 1uuu	00-- 11u0
Interrupt Wake-up from Sleep	PC + 1(1)	---1 0uuu	uu-- uuuu
RESET Instruction Executed	0000h	---u uuuu	uu-- u0uu
Stack Overflow Reset (STVREN = 1)	0000h	---u uuuu	1u-- uuuu
Stack Underflow Reset (STVREN = 1)	0000h	---u uuuu	u1-- uuuu

Legend: u = unchanged, x = unknown, - = unimplemented bit, reads as '0'.

Note 1: When the wake-up is due to an interrupt and Global Enable bit (GIE) is set, the return address is pushed on the stack and PC is loaded with the interrupt vector (0004h) after execution of PC + 1.

© 2012-2014 Microchip Technology Inc.

5.13 Power Control (PCON) Register

The Power Control (PCON) register contains flag bits to differentiate between a:

- Power-on Reset ($\overline{\text{POR}}$)
- Brown-out Reset ($\overline{\text{BOR}}$)
- Reset Instruction Reset ($\overline{\text{RI}}$)
- $\overline{\text{MCLR}}$ Reset ($\overline{\text{RMCLR}}$)
- Watchdog Timer Reset ($\overline{\text{RWDT}}$)
- Stack Underflow Reset (STKUNF)
- Stack Overflow Reset (STKOVF)

The PCON register bits are shown in Register 5-2.

5.14 Register Definitions: Power Control

REGISTER 5-2: PCON: POWER CONTROL REGISTER

R/W/HS-0/q	R/W/HS-0/q	U-0	R/W/HC-1/q	R/W/HC-1/q	R/W/HC-1/q	R/W/HC-q/u	R/W/HC-q/u
STKOVF	STKUNF	—	$\overline{\text{RWDT}}$	$\overline{\text{RMCLR}}$	$\overline{\text{RI}}$	$\overline{\text{POR}}$	$\overline{\text{BOR}}$
bit 7							bit 0

Legend:		
HC = Bit is cleared by hardware		HS = Bit is set by hardware
R = Readable bit	W = Writable bit	U = Unimplemented bit, read as ‘0’
u = Bit is unchanged	x = Bit is unknown	-m/n = Value at POR and BOR/Value at all other Resets
‘1’ = Bit is set	‘0’ = Bit is cleared	q = Value depends on condition

bit 7 **STKOVF:** Stack Overflow Flag bit
1 = A Stack Overflow occurred
0 = A Stack Overflow has not occurred or cleared by firmware

bit 6 **STKUNF:** Stack Underflow Flag bit
1 = A Stack Underflow occurred
0 = A Stack Underflow has not occurred or cleared by firmware

bit 5 **Unimplemented:** Read as ‘0’

bit 4 **$\overline{\text{RWDT}}$:** Watchdog Timer Reset Flag bit
1 = A Watchdog Timer Reset has not occurred or set to ‘1’ by firmware
0 = A Watchdog Timer Reset has occurred (cleared by hardware)

bit 3 **$\overline{\text{RMCLR}}$:** $\overline{\text{MCLR}}$ Reset Flag bit
1 = A $\overline{\text{MCLR}}$ Reset has not occurred or set to ‘1’ by firmware
0 = A $\overline{\text{MCLR}}$ Reset has occurred (cleared by hardware)

bit 2 **$\overline{\text{RI}}$:** RESET Instruction Flag bit
1 = A RESET instruction has not been executed or set to ‘1’ by firmware
0 = A RESET instruction has been executed (cleared by hardware)

bit 1 **$\overline{\text{POR}}$:** Power-on Reset Status bit
1 = No Power-on Reset occurred
0 = A Power-on Reset occurred (must be set in software after a Power-on Reset occurs)

bit 0 **$\overline{\text{BOR}}$:** Brown-out Reset Status bit
1 = No Brown-out Reset occurred
0 = A Brown-out Reset occurred (must be set in software after a Power-on Reset or Brown-out Reset occurs)

TABLE 5-5: SUMMARY OF REGISTERS ASSOCIATED WITH RESETS

Name	Bit 7	Bit 6	Bit 5	Bit 4	Bit 3	Bit 2	Bit 1	Bit 0	Register on Page
BORCON	SBOREN	BORFS	—	—	—	—	—	BORRDY	61
PCON	STKOVF	STKUNF	—	$\overline{\text{RWDT}}$	$\overline{\text{RMCLR}}$	$\overline{\text{RI}}$	$\overline{\text{POR}}$	$\overline{\text{BOR}}$	65
STATUS	—	—	—	$\overline{\text{TO}}$	$\overline{\text{PD}}$	Z	DC	C	27
WDTCON	—	—	WDTPS<4:0>					SWDTEN	110

Legend: — = unimplemented location, read as ‘0’. Shaded cells are not used by Resets.

© 2012-2014 Microchip Technology Inc.

6.0 OSCILLATOR MODULE (WITH FAIL-SAFE CLOCK MONITOR)

6.1 Overview

The oscillator module has a wide variety of clock sources and selection features that allow it to be used in a wide range of applications while maximizing performance and minimizing power consumption. Figure 6-1 illustrates a block diagram of the oscillator module.

Clock sources can be supplied from external oscillators, quartz crystal resonators, ceramic resonators and Resistor-Capacitor (RC) circuits. In addition, the system clock source can be supplied from one of two internal oscillators and PLL circuits, with a choice of speeds selectable via software. Additional clock features include:

- Selectable system clock source between external or internal sources via software.
- Two-Speed Start-up mode, which minimizes latency between external oscillator start-up and code execution.
- Fail-Safe Clock Monitor (FSCM) designed to detect a failure of the external clock source (LP, XT, HS, EC or RC modes) and switch automatically to the internal oscillator.
- Oscillator Start-up Timer (OST) ensures stability of crystal oscillator sources

The oscillator module can be configured in one of eight clock modes.

1. ECL – External Clock Low-Power mode (0 MHz to 0.5 MHz)
2. ECM – External Clock Medium-Power mode (0.5 MHz to 4 MHz)
3. ECH – External Clock High-Power mode (4 MHz to 32 MHz)
4. LP – 32 kHz Low-Power Crystal mode.
5. XT – Medium Gain Crystal or Ceramic Resonator Oscillator mode (up to 4 MHz)
6. HS – High Gain Crystal or Ceramic Resonator mode (4 MHz to 20 MHz)
7. RC – External Resistor-Capacitor (RC).
8. INTOSC – Internal oscillator (31 kHz to 32 MHz).

Clock Source modes are selected by the FOSC<2:0> bits in the Configuration Words. The FOSC bits determine the type of oscillator that will be used when the device is first powered.

The EC clock mode relies on an external logic level signal as the device clock source. The LP, XT, and HS clock modes require an external crystal or resonator to be connected to the device. Each mode is optimized for a different frequency range. The RC clock mode requires an external resistor and capacitor to set the oscillator frequency.

The INTOSC internal oscillator block produces low, medium, and high-frequency clock sources, designated LFINTOSC, MFINTOSC and HFINTOSC. (see Internal Oscillator Block, Figure 6-1). A wide selection of device clock frequencies may be derived from these three clock sources.

FIGURE 6-1: SIMPLIFIED PIC® MCU CLOCK SOURCE BLOCK DIAGRAM

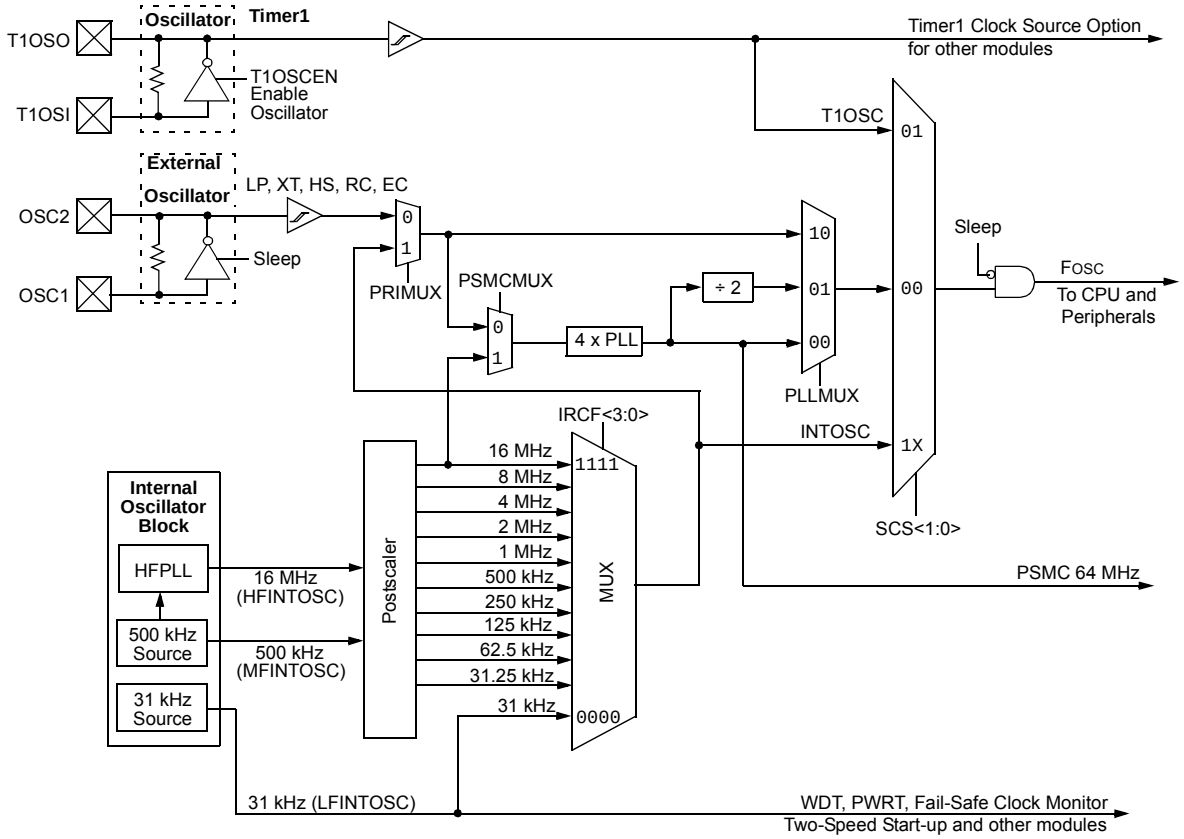

SCS	FOSC<2:0>	PLLEN or SPLLEN	PRIMUX	PSMCMUX	PLLMUX
=00	=100	0	1	1	10
		1	1	1	01
	≠100	0	0	1	10
		1(1)	0	0	00
≠00	XXX	X	X	1	XX

Note 1: This selection should not be made when the PSMC is using the 64 MHz clock option.

© 2012-2014 Microchip Technology Inc.

6.2 Clock Source Types

Clock sources can be classified as external or internal.

External clock sources rely on external circuitry for the clock source to function. Examples are: oscillator modules (EC mode), quartz crystal resonators or ceramic resonators (LP, XT and HS modes) and Resistor-Capacitor (RC) mode circuits.

Internal clock sources are contained within the oscillator module. The internal oscillator block has two internal oscillators and a dedicated Phase-Lock Loop (HFPLL) that are used to generate three internal system clock sources: the 16 MHz High-Frequency Internal Oscillator (HFINTOSC), 500 kHz (MFINTOSC) and the 31 kHz Low-Frequency Internal Oscillator (LFINTOSC).

The system clock can be selected between external or internal clock sources via the System Clock Select (SCS) bits in the OSCCON register. See **Section 6.3 "Clock Switching"** for additional information.

6.2.1 EXTERNAL CLOCK SOURCES

An external clock source can be used as the device system clock by performing one of the following actions:

- Program the FOSC<2:0> bits in the Configuration Words to select an external clock source that will be used as the default system clock upon a device Reset.
- Write the SCS<1:0> bits in the OSCCON register to switch the system clock source to:
  - Timer1 oscillator during run-time, or
  - An external clock source determined by the value of the FOSC bits.

See **Section 6.3 "Clock Switching"**for more information.

6.2.1.1 EC Mode

The External Clock (EC) mode allows an externally generated logic level signal to be the system clock source. When operating in this mode, an external clock source is connected to the OSC1 input. OSC2/CLKOUT is available for general purpose I/O or CLKOUT. Figure 6-2 shows the pin connections for EC mode.

EC mode has three power modes to select from through Configuration Words:

- High power, 4-32 MHz (FOSC = `111`)
- Medium power, 0.5-4 MHz (FOSC = `110`)
- Low power, 0-0.5 MHz (FOSC = `101`)

The Oscillator Start-up Timer (OST) is disabled when EC mode is selected. Therefore, there is no delay in operation after a Power-on Reset (POR) or wake-up from Sleep. Because the PIC® MCU design is fully static, stopping the external clock input will have the effect of halting the device while leaving all data intact. Upon restarting the external clock, the device will resume operation as if no time had elapsed.

FIGURE 6-2: EXTERNAL CLOCK (EC) MODE OPERATION

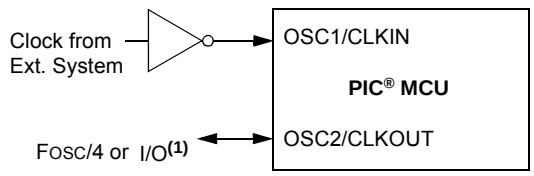

Note 1: Output depends upon $\overline{\text{CLKOUTEN}}$ bit of the Configuration Words.

6.2.1.2 LP, XT, HS Modes

The LP, XT and HS modes support the use of quartz crystal resonators or ceramic resonators connected to OSC1 and OSC2 (Figure 6-3). The three modes select a low, medium or high gain setting of the internal inverter-amplifier to support various resonator types and speed.

LP Oscillator mode selects the lowest gain setting of the internal inverter-amplifier. LP mode current consumption is the least of the three modes. This mode is designed to drive only 32.768 kHz tuning-fork type crystals (watch crystals).

XT Oscillator mode selects the intermediate gain setting of the internal inverter-amplifier. XT mode current consumption is the medium of the three modes. This mode is best suited to drive resonators with a medium drive level specification.

HS Oscillator mode selects the highest gain setting of the internal inverter-amplifier. HS mode current consumption is the highest of the three modes. This mode is best suited for resonators that require a high drive setting.

Figure 6-3 and Figure 6-4 show typical circuits for quartz crystal and ceramic resonators, respectively.

FIGURE 6-3: QUARTZ CRYSTAL OPERATION (LP, XT OR HS MODE)

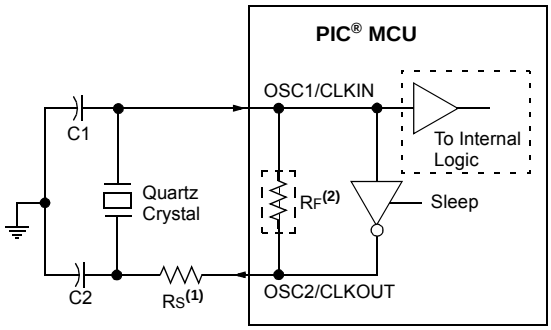

Note 1: A series resistor (RS) may be required for quartz crystals with low drive level.

2: The value of RF varies with the Oscillator mode selected (typically between 2 MΩ to 10 MΩ).

Note 1: Quartz crystal characteristics vary according to type, package and manufacturer. The user should consult the manufacturer data sheets for specifications and recommended application.

2: Always verify oscillator performance over the VDD and temperature range that is expected for the application.

3: For oscillator design assistance, reference the following Microchip Applications Notes:

- AN826, "*Crystal Oscillator Basics and Crystal Selection for rfPIC® and PIC® Devices*" (DS00826)
- AN849, "*Basic PIC® Oscillator Design*" (DS00849)
- AN943, "*Practical PIC® Oscillator Analysis and Design*" (DS00943)
- AN949, "*Making Your Oscillator Work*" (DS00949)

FIGURE 6-4: CERAMIC RESONATOR OPERATION (XT OR HS MODE)

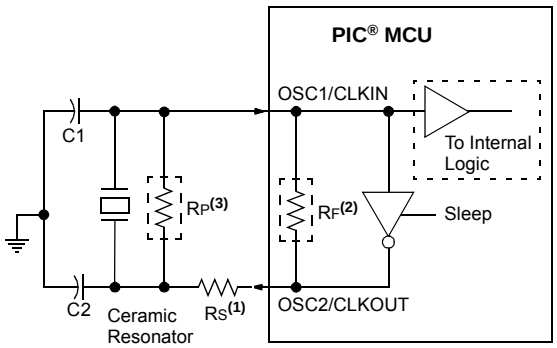

Note 1: A series resistor (RS) may be required for ceramic resonators with low drive level.

2: The value of RF varies with the Oscillator mode selected (typically between 2 MΩ to 10 MΩ).

3: An additional parallel feedback resistor (RP) may be required for proper ceramic resonator operation.

6.2.1.3 Oscillator Start-up Timer (OST)

If the oscillator module is configured for LP, XT or HS modes, the Oscillator Start-up Timer (OST) counts 1024 oscillations from OSC1. This occurs following a Power-on Reset (POR) and when the Power-up Timer (PWRT) has expired (if configured), or a wake-up from Sleep. During this time, the program counter does not increment and program execution is suspended, unless either FSCM or Two-Speed Start-Up are enabled. In this case, code will continue to execute at the selected INTOSC frequency while the OST is counting. The OST ensures that the oscillator circuit, using a quartz crystal resonator or ceramic resonator, has started and is providing a stable system clock to the oscillator module.

In order to minimize latency between external oscillator start-up and code execution, the Two-Speed Clock Start-up mode can be selected (see **Section 6.4 "Two-Speed Clock Start-up Mode"**).

© 2012-2014 Microchip Technology Inc.

6.2.1.4 4x PLL

The oscillator module contains a 4x PLL that can be used with both external and internal clock sources to provide a system clock source. The input frequency for the 4x PLL must fall within specifications. See the PLL Clock Timing Specifications in **Section 30.0 "Electrical Specifications"**.

The 4x PLL may be enabled for use by one of two methods:

1. Program the PLLEN bit in Configuration Words to a '1'.
2. Write the SPLLEN bit in the OSCCON register to a '1'. If the PLLEN bit in Configuration Words is programmed to a '1', then the value of SPLLEN is ignored.

6.2.1.5 TIMER1 Oscillator

The Timer1 oscillator is a separate crystal oscillator that is associated with the Timer1 peripheral. It is optimized for timekeeping operations with a 32.768 kHz crystal connected between the T1OSO and T1OSI device pins.

The Timer1 oscillator can be used as an alternate system clock source and can be selected during run-time using clock switching. Refer to **Section 6.3 "Clock Switching"** for more information.

FIGURE 6-5: QUARTZ CRYSTAL OPERATION (TIMER1 OSCILLATOR)

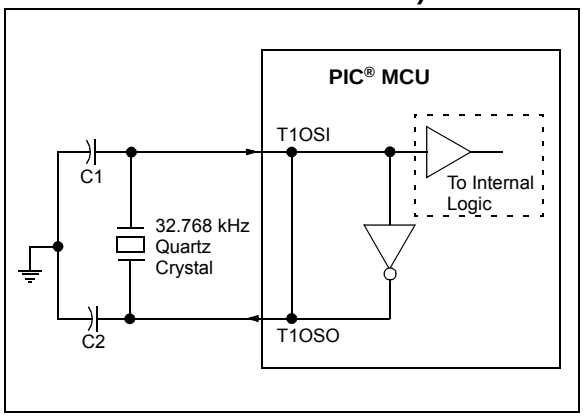

Note 1: Quartz crystal characteristics vary according to type, package and manufacturer. The user should consult the manufacturer data sheets for specifications and recommended application.

2: Always verify oscillator performance over the VDD and temperature range that is expected for the application.

3: For oscillator design assistance, reference the following Microchip Applications Notes:

- AN826, "*Crystal Oscillator Basics and Crystal Selection for rfPIC® and PIC® Devices*" (DS00826)
- AN849, "*Basic PIC® Oscillator Design*" (DS00849)
- AN943, "*Practical PIC® Oscillator Analysis and Design*" (DS00943)
- AN949, "*Making Your Oscillator Work*" (DS00949)
- TB097, "*Interfacing a Micro Crystal MS1V-T1K 32.768 kHz Tuning Fork Crystal to a PIC16F690/SS*" (DS91097)
- AN1288, "*Design Practices for Low-Power External Oscillators*" (DS01288)

6.2.1.6 External RC Mode

The external Resistor-Capacitor (RC) modes support the use of an external RC circuit. This allows the designer maximum flexibility in frequency choice while keeping costs to a minimum when clock accuracy is not required.

The RC circuit connects to OSC1. OSC2/CLKOUT is available for general purpose I/O or CLKOUT. The function of the OSC2/CLKOUT pin is determined by the $\overline{\text{CLKOUTEN}}$ bit in Configuration Words.

Figure 6-6 shows the external RC mode connections.

FIGURE 6-6: EXTERNAL RC MODES

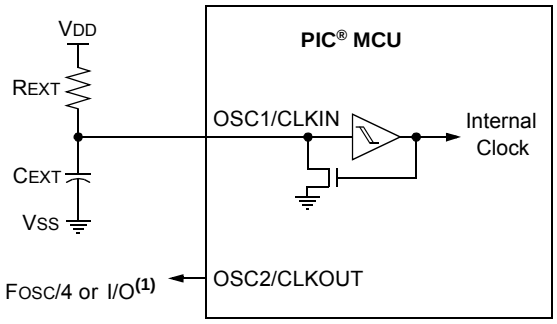

Recommended values: 10 kΩ ≤ REXT ≤ 100 kΩ, <3V
3 kΩ ≤ REXT ≤ 100 kΩ, 3-5V
CEXT > 20 pF, 2-5V

Note 1: Output depends upon $\overline{\text{CLKOUTEN}}$ bit of the Configuration Words.

The RC oscillator frequency is a function of the supply voltage, the resistor (REXT) and capacitor (CEXT) values and the operating temperature. Other factors affecting the oscillator frequency are:

- threshold voltage variation
- component tolerances
- packaging variations in capacitance

The user also needs to take into account variation due to tolerance of external RC components used.

6.2.2 INTERNAL CLOCK SOURCES

The device may be configured to use the internal oscillator block as the system clock by performing one of the following actions:

- Program the FOSC<2:0> bits in Configuration Words to select the INTOSC clock source, which will be used as the default system clock upon a device Reset.
- Write the SCS<1:0> bits in the OSCCON register to switch the system clock source to the internal oscillator during run-time. See **Section 6.3 "Clock Switching"**for more information.

In **INTOSC** mode, OSC1/CLKIN is available for general purpose I/O. OSC2/CLKOUT is available for general purpose I/O or CLKOUT.

The function of the OSC2/CLKOUT pin is determined by the $\overline{\text{CLKOUTEN}}$ bit in Configuration Words.

The internal oscillator block has two independent oscillators and a dedicated Phase-Lock Loop, HFPLL that can produce one of three internal system clock sources.

1. The **HFINTOSC** (High-Frequency Internal Oscillator) is factory calibrated and operates at 16 MHz. The HFINTOSC source is generated from the 500 kHz MFINTOSC source and the dedicated Phase-Lock Loop, HFPLL. The frequency of the HFINTOSC can be user-adjusted via software using the OSCTUNE register (Register 6-3).
2. The **MFINTOSC** (Medium-Frequency Internal Oscillator) is factory calibrated and operates at 500 kHz. The frequency of the MFINTOSC can be user-adjusted via software using the OSCTUNE register (Register 6-3).
3. The **LFINTOSC** (Low-Frequency Internal Oscillator) is uncalibrated and operates at 31 kHz.

© 2012-2014 Microchip Technology Inc.

6.2.2.1 HFINTOSC

The High-Frequency Internal Oscillator (HFINTOSC) is a factory calibrated 16 MHz internal clock source. The frequency of the HFINTOSC can be altered via software using the OSCTUNE register (Register 6-3).

The output of the HFINTOSC connects to a postscaler and multiplexer (see Figure 6-1). One of multiple frequencies derived from the HFINTOSC can be selected via software using the IRCF<3:0> bits of the OSCCON register. See **Section 6.2.2.7 "Internal Oscillator Clock Switch Timing"** for more information.

The HFINTOSC is enabled by:

- Configure the IRCF<3:0> bits of the OSCCON register for the desired HF frequency, and
- FOSC<2:0> = `100`, or
- Set the System Clock Source (SCS) bits of the OSCCON register to '`1x`'.

A fast startup oscillator allows internal circuits to power up and stabilize before switching to HFINTOSC.

The High Frequency Internal Oscillator Ready bit (HFIOFR) of the OSCSTAT register indicates when the HFINTOSC is running.

The High Frequency Internal Oscillator Status Locked bit (HFIOFL) of the OSCSTAT register indicates when the HFINTOSC is running within 2% of its final value.

The High Frequency Internal Oscillator Stable bit (HFIOFS) of the OSCSTAT register indicates when the HFINTOSC is running within 0.5% of its final value.

6.2.2.2 MFINTOSC

The Medium-Frequency Internal Oscillator (MFINTOSC) is a factory calibrated 500 kHz internal clock source. The frequency of the MFINTOSC can be altered via software using the OSCTUNE register (Register 6-3).

The output of the MFINTOSC connects to a postscaler and multiplexer (see Figure 6-1). One of nine frequencies derived from the MFINTOSC can be selected via software using the IRCF<3:0> bits of the OSCCON register. See **Section 6.2.2.7 "Internal Oscillator Clock Switch Timing"** for more information.

The MFINTOSC is enabled by:

- Configure the IRCF<3:0> bits of the OSCCON register for the desired HF frequency, and
- FOSC<2:0> = `100`, or
- Set the System Clock Source (SCS) bits of the OSCCON register to '`1x`'

The Medium Frequency Internal Oscillator Ready bit (MFIOFR) of the OSCSTAT register indicates when the MFINTOSC is running.

6.2.2.3 Internal Oscillator Frequency Adjustment

The 500 kHz internal oscillator is factory calibrated. This internal oscillator can be adjusted in software by writing to the OSCTUNE register (Register 6-3). Since the HFINTOSC and MFINTOSC clock sources are derived from the 500 kHz internal oscillator a change in the OSCTUNE register value will apply to both.

The default value of the OSCTUNE register is '`0`'. The value is a 6-bit two's complement number. A value of 1Fh will provide an adjustment to the maximum frequency. A value of 20h will provide an adjustment to the minimum frequency.

When the OSCTUNE register is modified, the oscillator frequency will begin shifting to the new frequency. Code execution continues during this shift. There is no indication that the shift has occurred.

OSCTUNE does not affect the LFINTOSC frequency. Operation of features that depend on the LFINTOSC clock source frequency, such as the Power-up Timer (PWRT), Watchdog Timer (WDT), Fail-Safe Clock Monitor (FSCM) and peripherals, are *not* affected by the change in frequency.

6.2.2.4 LFINTOSC

The Low-Frequency Internal Oscillator (LFINTOSC) is an uncalibrated 31 kHz internal clock source.

The output of the LFINTOSC connects to a multiplexer (see Figure 6-1). Select 31 kHz, via software, using the IRCF<3:0> bits of the OSCCON register. See **Section 6.2.2.7 "Internal Oscillator Clock Switch Timing"** for more information. The LFINTOSC is also the frequency for the Power-up Timer (PWRT), Watchdog Timer (WDT) and Fail-Safe Clock Monitor (FSCM).

The LFINTOSC is enabled by selecting 31 kHz (IRCF<3:0> bits of the OSCCON register = `000`) as the system clock source (SCS bits of the OSCCON register = `1x`), or when any of the following are enabled:

- Configure the IRCF<3:0> bits of the OSCCON register for the desired LF frequency, and
- FOSC<2:0> = `100`, or
- Set the System Clock Source (SCS) bits of the OSCCON register to '`1x`'

Peripherals that use the LFINTOSC are:

- Power-up Timer (PWRT)
- Watchdog Timer (WDT)
- Fail-Safe Clock Monitor (FSCM)

The Low-Frequency Internal Oscillator Ready bit (LFIOFR) of the OSCSTAT register indicates when the LFINTOSC is running.

6.2.2.5 Internal Oscillator Frequency Selection

The system clock speed can be selected via software using the Internal Oscillator Frequency Select bits IRCF<3:0> of the OSCCON register.

The output of the 16 MHz HFINTOSC, 500 kHz MFINTOSC, and 31 kHz LFINTOSC connects to a postscaler and multiplexer (see Figure 6-1). The Internal Oscillator Frequency Select bits IRCF<3:0> of the OSCCON register select the frequency output of the internal oscillators. One of the following frequencies can be selected via software:

- 32 MHz (requires 4x PLL)
- 16 MHz
- 8 MHz
- 4 MHz
- 2 MHz
- 1 MHz
- 500 kHz (default after Reset)
- 250 kHz
- 125 kHz
- 62.5 kHz
- 31.25 kHz
- 31 kHz (LFINTOSC)

Note:	Following any Reset, the IRCF<3:0> bits of the OSCCON register are set to '0111' and the frequency selection is set to 500 kHz. The user can modify the IRCF bits to select a different frequency.

The IRCF<3:0> bits of the OSCCON register allow duplicate selections for some frequencies. These duplicate choices can offer system design trade-offs. Lower power consumption can be obtained when changing oscillator sources for a given frequency. Faster transition times can be obtained between frequency changes that use the same oscillator source.

6.2.2.6 32 MHz Internal Oscillator Frequency Selection

The Internal Oscillator Block can be used with the 4x PLL associated with the External Oscillator Block to produce a 32 MHz internal system clock source. The following settings are required to use the 32 MHz internal clock source:

- The FOSC bits in Configuration Words must be set to use the INTOSC source as the device system clock (FOSC<2:0> = 100).
- The SCS bits in the OSCCON register must be cleared to use the clock determined by FOSC<2:0> in Configuration Words (SCS<1:0> = 00).
- The IRCF bits in the OSCCON register must be set to the 8 MHz or 16 MHz HFINTOSC set to use (IRCF<3:0> = 111x).
- The SPLLEN bit in the OSCCON register must be set to enable the 4x PLL, or the PLLEN bit of the Configuration Words must be programmed to a '1'.

Note:	When using the PLLEN bit of the Configuration Words, the 4x PLL cannot be disabled by software and the SPLLEN option will not be available.

The 4x PLL is not available for use with the internal oscillator when the SCS bits of the OSCCON register are set to '1x'. The SCS bits must be set to '00' to use the 4x PLL with the internal oscillator.

© 2012-2014 Microchip Technology Inc.

6.2.2.7 Internal Oscillator Clock Switch Timing

When switching between the HFINTOSC, MFINTOSC and the LFINTOSC, the new oscillator may already be shut down to save power (see Figure 6-7). If this is the case, there is a delay after the IRCF<3:0> bits of the OSCCON register are modified before the frequency selection takes place. The OSCSTAT register will reflect the current active status of the HFINTOSC, MFINTOSC and LFINTOSC oscillators. The sequence of a frequency selection is as follows:

1. IRCF<3:0> bits of the OSCCON register are modified.
2. If the new clock is shut down, a clock start-up delay is started.
3. Clock switch circuitry waits for a falling edge of the current clock.
4. The current clock is held low and the clock switch circuitry waits for a rising edge in the new clock.
5. The new clock is now active.
6. The OSCSTAT register is updated as required.
7. Clock switch is complete.

See Figure 6-7 for more details.

If the internal oscillator speed is switched between two clocks of the same source, there is no start-up delay before the new frequency is selected. Clock switching time delays are shown in Table 6-1.

Start-up delay specifications are located in the oscillator tables of **Section 30.0 "Electrical Specifications"**.

FIGURE 6-7: INTERNAL OSCILLATOR SWITCH TIMING

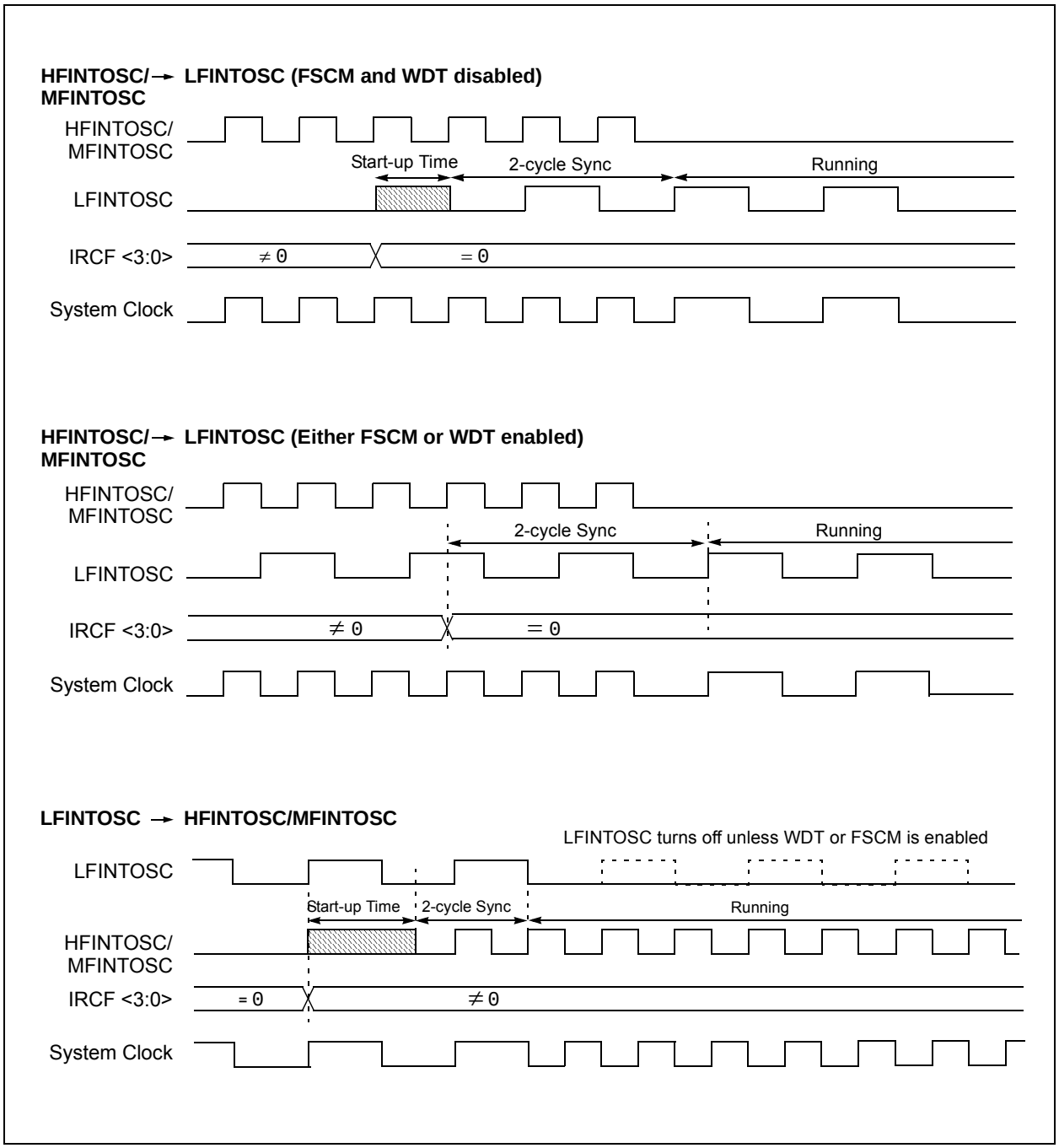

© 2012-2014 Microchip Technology Inc.

6.3 Clock Switching

The system clock source can be switched between external and internal clock sources via software using the System Clock Select (SCS) bits of the OSCCON register. The following clock sources can be selected using the SCS bits:

- Default system oscillator determined by FOSC bits in Configuration Words
- Timer1 32 kHz crystal oscillator
- Internal Oscillator Block (INTOSC)

6.3.1 SYSTEM CLOCK SELECT (SCS) BITS

The System Clock Select (SCS) bits of the OSCCON register selects the system clock source that is used for the CPU and peripherals.

- When the SCS bits of the OSCCON register = `00`, the system clock source is determined by the value of the FOSC<2:0> bits in the Configuration Words.
- When the SCS bits of the OSCCON register = `01`, the system clock source is the Timer1 oscillator.
- When the SCS bits of the OSCCON register = `1x`, the system clock source is chosen by the internal oscillator frequency selected by the IRCF<3:0> bits of the OSCCON register. After a Reset, the SCS bits of the OSCCON register are always cleared.

Note:	Any automatic clock switch, which may occur from Two-Speed Start-up or Fail-Safe Clock Monitor, does not update the SCS bits of the OSCCON register. The user can monitor the OSTS bit of the OSCSTAT register to determine the current system clock source.

When switching between clock sources, a delay is required to allow the new clock to stabilize. These oscillator delays are shown in Table 6-1.

6.3.2 OSCILLATOR START-UP TIMER STATUS (OSTS) BIT

The Oscillator Start-up Timer Status (OSTS) bit of the OSCSTAT register indicates whether the system clock is running from the external clock source, as defined by the FOSC<2:0> bits in the Configuration Words, or from the internal clock source. In particular, OSTS indicates that the Oscillator Start-up Timer (OST) has timed out for LP, XT or HS modes. The OST does not reflect the status of the Timer1 oscillator.

6.3.3 TIMER1 OSCILLATOR

The Timer1 oscillator is a separate crystal oscillator associated with the Timer1 peripheral. It is optimized for timekeeping operations with a 32.768 kHz crystal connected between the T1OSO and T1OSI device pins.

The Timer1 oscillator is enabled using the T1OSCEN control bit in the T1CON register. See **Section 22.0 “Timer1 Module with Gate Control”** for more information about the Timer1 peripheral.

6.3.4 TIMER1 OSCILLATOR READY (T1OSCR) BIT

The user must ensure that the Timer1 oscillator is ready to be used before it is selected as a system clock source. The Timer1 Oscillator Ready (T1OSCR) bit of the OSCSTAT register indicates whether the Timer1 oscillator is ready to be used. After the T1OSCR bit is set, the SCS bits can be configured to select the Timer1 oscillator.

6.4 Two-Speed Clock Start-up Mode

Two-Speed Start-up mode provides additional power savings by minimizing the latency between external oscillator start-up and code execution. In applications that make heavy use of the Sleep mode, Two-Speed Start-up will remove the external oscillator start-up time from the time spent awake and can reduce the overall power consumption of the device. This mode allows the application to wake-up from Sleep, perform a few instructions using the INTOSC internal oscillator block as the clock source and go back to Sleep without waiting for the external oscillator to become stable.

Two-Speed Start-up provides benefits when the oscillator module is configured for LP, XT or HS modes. The Oscillator Start-up Timer (OST) is enabled for these modes and must count 1024 oscillations before the oscillator can be used as the system clock source.

If the oscillator module is configured for any mode other than LP, XT or HS mode, then Two-Speed Start-up is disabled. This is because the external clock oscillator does not require any stabilization time after POR or an exit from Sleep.

If the OST count reaches 1024 before the device enters Sleep mode, the OSTS bit of the OSCSTAT register is set and program execution switches to the external oscillator. However, the system may never operate from the external oscillator if the time spent awake is very short.

> **Note:** Executing a SLEEP instruction will abort the oscillator start-up time and will cause the OSTS bit of the OSCSTAT register to remain clear.

6.4.1 TWO-SPEED START-UP MODE CONFIGURATION

Two-Speed Start-up mode is configured by the following settings:

- IESO (of the Configuration Words) = 1; Internal/External Switchover bit (Two-Speed Start-up mode enabled).
- SCS (of the OSCCON register) = 00.
- FOSC<2:0> bits in the Configuration Words configured for LP, XT or HS mode.

Two-Speed Start-up mode is entered after:

- Power-on Reset (POR) and, if enabled, after Power-up Timer (PWRT) has expired, or
- Wake-up from Sleep.

TABLE 6-1: OSCILLATOR SWITCHING DELAYS

Switch From	Switch To	Frequency	Oscillator Delay
Sleep/POR	LFINTOSC(1) MFINTOSC(1) HFINTOSC(1)	31 kHz 31.25 kHz-500 kHz 31.25 kHz-16 MHz	Oscillator Warm-up Delay (TWARM)
Sleep/POR	EC, RC(1)	DC – 32 MHz	2 cycles
LFINTOSC	EC, RC(1)	DC – 32 MHz	1 cycle of each
Sleep/POR	Timer1 Oscillator LP, XT, HS(1)	32 kHz-20 MHz	1024 Clock Cycles (OST)
Any clock source	MFINTOSC(1) HFINTOSC(1)	31.25 kHz-500 kHz 31.25 kHz-16 MHz	2 μs (approx.)
Any clock source	LFINTOSC(1)	31 kHz	1 cycle of each
Any clock source	Timer1 Oscillator	32 kHz	1024 Clock Cycles (OST)
PLL inactive	PLL active	16-32 MHz	2 ms (approx.)

Note 1: PLL inactive.

© 2012-2014 Microchip Technology Inc.

6.4.2 TWO-SPEED START-UP SEQUENCE

1. Wake-up from Power-on Reset or Sleep.
2. Instructions begin execution by the internal oscillator at the frequency set in the IRCF<3:0> bits of the OSCCON register.
3. OST enabled to count 1024 clock cycles.
4. OST timed out, wait for falling edge of the internal oscillator.
5. OSTS is set.
6. System clock held low until the next falling edge of new clock (LP, XT or HS mode).
7. System clock is switched to external clock source.

6.4.3 CHECKING TWO-SPEED CLOCK STATUS

Checking the state of the OSTS bit of the OSCSTAT register will confirm if the microcontroller is running from the external clock source, as defined by the FOSC<2:0> bits in the Configuration Words, or the internal oscillator.

FIGURE 6-8: TWO-SPEED START-UP

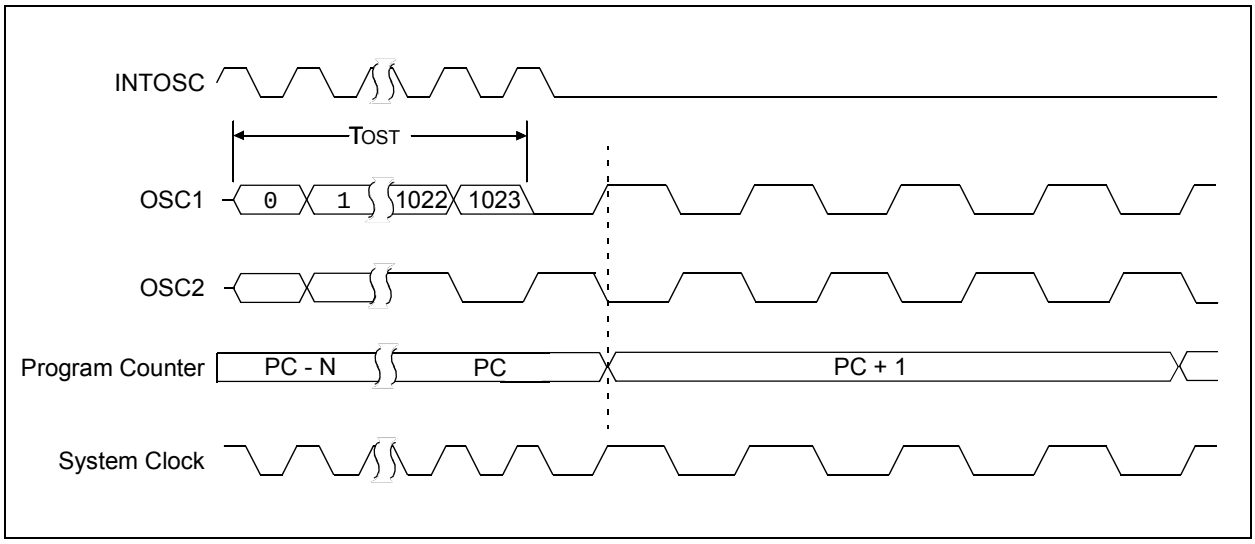

6.5 Fail-Safe Clock Monitor

The Fail-Safe Clock Monitor (FSCM) allows the device to continue operating should the external oscillator fail. The FSCM can detect oscillator failure any time after the Oscillator Start-up Timer (OST) has expired. The FSCM is enabled by setting the FCMEN bit in the Configuration Words. The FSCM is applicable to all external Oscillator modes (LP, XT, HS, EC, Timer1 Oscillator and RC).

FIGURE 6-9: FSCM BLOCK DIAGRAM

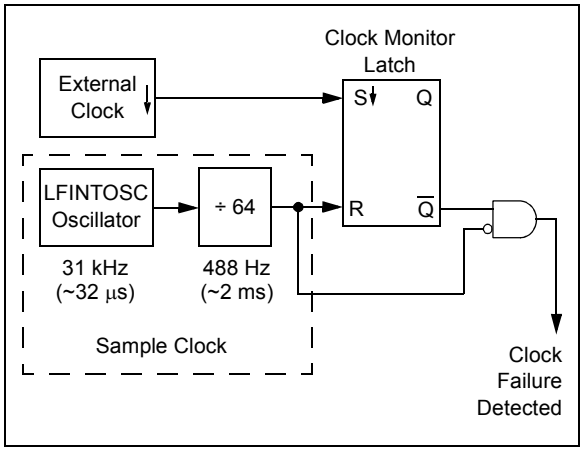

6.5.1 FAIL-SAFE DETECTION

The FSCM module detects a failed oscillator by comparing the external oscillator to the FSCM sample clock. The sample clock is generated by dividing the LFINTOSC by 64. See Figure 6-9. Inside the fail detector block is a latch. The external clock sets the latch on each falling edge of the external clock. The sample clock clears the latch on each rising edge of the sample clock. A failure is detected when an entire half-cycle of the sample clock elapses before the external clock goes low.

6.5.2 FAIL-SAFE OPERATION

When the external clock fails, the FSCM switches the device clock to an internal clock source and sets the bit flag OSFIF of the PIR2 register. Setting this flag will generate an interrupt if the OSFIE bit of the PIE2 register is also set. The device firmware can then take steps to mitigate the problems that may arise from a failed clock. The system clock will continue to be sourced from the internal clock source until the device firmware successfully restarts the external oscillator and switches back to external operation.

The internal clock source chosen by the FSCM is determined by the IRCF<3:0> bits of the OSCCON register. This allows the internal oscillator to be configured before a failure occurs.

6.5.3 FAIL-SAFE CONDITION CLEARING

The Fail-Safe condition is cleared after a Reset, executing a SLEEP instruction or changing the SCS bits of the OSCCON register. When the SCS bits are changed, the OST is restarted. While the OST is running, the device continues to operate from the INTOSC selected in OSCCON. When the OST times out, the Fail-Safe condition is cleared after successfully switching to the external clock source. The OSFIF bit should be cleared prior to switching to the external clock source. If the Fail-Safe condition still exists, the OSFIF flag will again become set by hardware.

6.5.4 RESET OR WAKE-UP FROM SLEEP

The FSCM is designed to detect an oscillator failure after the Oscillator Start-up Timer (OST) has expired. The OST is used after waking up from Sleep and after any type of Reset. The OST is not used with the EC or RC Clock modes so that the FSCM will be active as soon as the Reset or wake-up has completed. When the FSCM is enabled, the Two-Speed Start-up is also enabled. Therefore, the device will always be executing code while the OST is operating.

Note:	Due to the wide range of oscillator start-up times, the Fail-Safe circuit is not active during oscillator start-up (i.e., after exiting Reset or Sleep). After an appropriate amount of time, the user should check the Status bits in the OSCSTAT register to verify the oscillator start-up and that the system clock switchover has successfully completed.

© 2012-2014 Microchip Technology Inc.

FIGURE 6-10: FSCM TIMING DIAGRAM

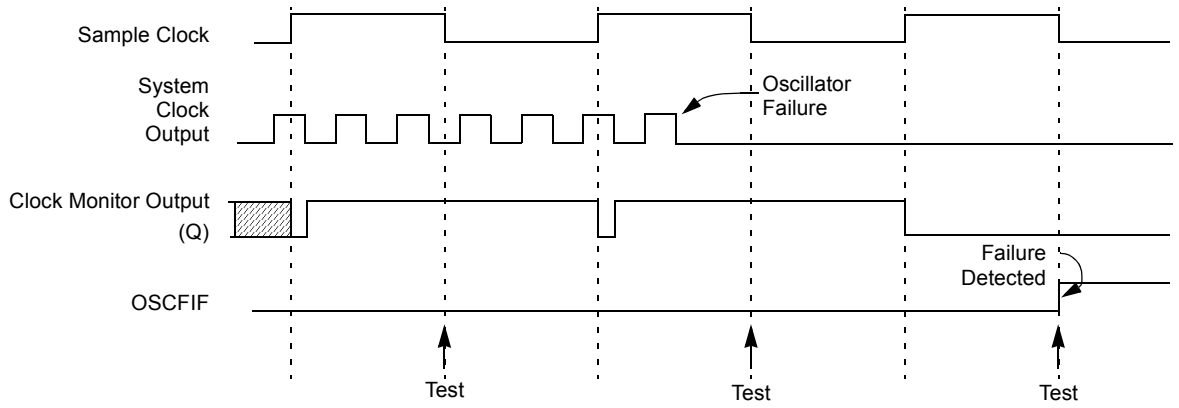

Note: The system clock is normally at a much higher frequency than the sample clock. The relative frequencies in this example have been chosen for clarity.

6.6 Register Definitions: Oscillator Control

REGISTER 6-1: OSCCON: OSCILLATOR CONTROL REGISTER

R/W-0/0	R/W-0/0	R/W-1/1	R/W-1/1	R/W-1/1	U-0	R/W-0/0	R/W-0/0
SPLLEN	IRCF<3:0>				—	SCS<1:0>	
bit 7							bit 0

Legend:		
R = Readable bit	W = Writable bit	U = Unimplemented bit, read as ‘0’
u = Bit is unchanged	x = Bit is unknown	-n/n = Value at POR and BOR/Value at all other Resets
‘1’ = Bit is set	‘0’ = Bit is cleared	

bit 7 **SPLLEN:** Software PLL Enable bit
If PLLEN in Configuration Words = 1:
SPLLEN bit is ignored. 4x PLL is always enabled (subject to oscillator requirements)
If PLLEN in Configuration Words = 0:
1 = 4x PLL Is enabled
0 = 4x PLL is disabled

bit 6-3 **IRCF<3:0>:** Internal Oscillator Frequency Select bits
1111 = 16 MHz HF or 32 MHz HF(2)
1110 = 8 MHz or 32 MHz HF(2)
1101 = 4 MHz HF
1100 = 2 MHz HF
1011 = 1 MHz HF
1010 = 500 kHz HF(1)
1001 = 250 kHz HF(1)
1000 = 125 kHz HF(1)
0111 = 500 kHz MF (default upon Reset)
0110 = 250 kHz MF
0101 = 125 kHz MF
0100 = 62.5 kHz MF
0011 = 31.25 kHz HF(1)
0010 = 31.25 kHz MF
000x = 31 kHz LF

bit 2 **Unimplemented:** Read as ‘0’

bit 1-0 **SCS<1:0>:** System Clock Select bits
1x = Internal oscillator block
01 = Timer1 oscillator
00 = Clock determined by FOSC<2:0> in Configuration Words.

Note 1: Duplicate frequency derived from HFINTOSC.
2: 32 MHz when SPLLEN bit is set. Refer to **Section 6.2.2.6 “32 MHz Internal Oscillator Frequency Selection”**.

© 2012-2014 Microchip Technology Inc.

REGISTER 6-2: OSCSTAT: OSCILLATOR STATUS REGISTER

R-1/q	R-0/q	R-q/q	R-0/q	R-0/q	R-q/q	R-0/0	R-0/q
T1OSCR	PLLR	OSTS	HFIOFR	HFIOFL	MFIOFR	LFIOFR	HFIOFS
bit 7							bit 0

Legend:		
R = Readable bit	W = Writable bit	U = Unimplemented bit, read as ‘0’
u = Bit is unchanged	x = Bit is unknown	-n/n = Value at POR and BOR/Value at all other Resets
‘1’ = Bit is set	‘0’ = Bit is cleared	q = Conditional

bit 7 **T1OSCR:** Timer1 Oscillator Ready bit
<u>If T1OSCEN = 1</u>:
1 = Timer1 oscillator is ready
0 = Timer1 oscillator is not ready
<u>If T1OSCEN = 0</u>:
1 = Timer1 clock source is always ready

bit 6 **PLLR** 4x PLL Ready bit
1 = 4x PLL is ready
0 = 4x PLL is not ready

bit 5 **OSTS:** Oscillator Start-up Timer Status bit
1 = Running from the clock defined by the FOSC<2:0> bits of the Configuration Words
0 = Running from an internal oscillator (FOSC<2:0> = 100)

bit 4 **HFIOFR:** High-Frequency Internal Oscillator Ready bit
1 = HFINTOSC is ready
0 = HFINTOSC is not ready

bit 3 **HFIOFL:** High-Frequency Internal Oscillator Locked bit
1 = HFINTOSC is at least 2% accurate
0 = HFINTOSC is not 2% accurate

bit 2 **MFIOFR:** Medium-Frequency Internal Oscillator Ready bit
1 = MFINTOSC is ready
0 = MFINTOSC is not ready

bit 1 **LFIOFR:** Low-Frequency Internal Oscillator Ready bit
1 = LFINTOSC is ready
0 = LFINTOSC is not ready

bit 0 **HFIOFS:** High-Frequency Internal Oscillator Stable bit
1 = HFINTOSC is at least 0.5% accurate
0 = HFINTOSC is not 0.5% accurate

REGISTER 6-3: OSCTUNE: OSCILLATOR TUNING REGISTER

U-0	U-0	R/W-0/0	R/W-0/0	R/W-0/0	R/W-0/0	R/W-0/0	R/W-0/0
—	—	TUN<5:0>					
bit 7							bit 0

Legend:		
R = Readable bit	W = Writable bit	U = Unimplemented bit, read as ‘0’
u = Bit is unchanged	x = Bit is unknown	-n/n = Value at POR and BOR/Value at all other Resets
‘1’ = Bit is set	‘0’ = Bit is cleared	

bit 7-6 **Unimplemented:** Read as ‘0’

bit 5-0 **TUN<5:0>:** Frequency Tuning bits
100000 = Minimum frequency
•
•
•
111111 =
000000 = Oscillator module is running at the factory-calibrated frequency.
000001 =
•
•
•
011110 =
011111 = Maximum frequency

TABLE 6-2: SUMMARY OF REGISTERS ASSOCIATED WITH CLOCK SOURCES

Name	Bit 7	Bit 6	Bit 5	Bit 4	Bit 3	Bit 2	Bit 1	Bit 0	Register on Page
OSCCON	SPLLEN	IRCF<3:0>				—	SCS<1:0>		82
OSCSTAT	T1OSCR	PLLR	OSTS	HFIOFR	HFIOFL	MFIOFR	LFIOFR	HFIOFS	83
OSCTUNE	—	—	TUN<5:0>						84
PIE2	OSFIE	C2IE	C1IE	EEIE	BCL1IE	C4IE	C3IE	CCP2IE	95
PIR2	OSFIF	C2IF	C1IF	EEIF	BCL1IF	C4IF	C3IF	CCP2IF	99
T1CON	TMR1CS<1:0>		T1CKPS<1:0>		T1OSCEN	$\overline{\text{T1SYNC}}$	—	TMR1ON	207

Legend: — = unimplemented location, read as ‘0’. Shaded cells are not used by clock sources.

TABLE 6-3: SUMMARY OF CONFIGURATION WORD WITH CLOCK SOURCES

Name	Bits	Bit -/7	Bit -/6	Bit 13/5	Bit 12/4	Bit 11/3	Bit 10/2	Bit 9/1	Bit 8/0	Register on Page
CONFIG1	13:8	—	—	FCMEN	IESO	$\overline{\text{CLKOUTEN}}$	BOREN<1:0>		$\overline{\text{CPD}}$	54
	7:0	$\overline{\text{CP}}$	MCLRE	$\overline{\text{PWRTE}}$	WDTE<1:0>		FOSC<2:0>			

Legend: — = unimplemented location, read as ‘0’. Shaded cells are not used by clock sources.
Note 1: PIC16F1784/6/7 only.

© 2012-2014 Microchip Technology Inc.

7.0 REFERENCE CLOCK MODULE

The reference clock module provides the ability to send a divided clock to the clock output pin of the device (CLKR). This module is available in all oscillator configurations and allows the user to select a greater range of clock submultiples to drive external devices in the application. The reference clock module includes the following features:

- System clock is the source
- Available in all oscillator configurations
- Programmable clock divider
- Output enable to a port pin
- Selectable duty cycle
- Slew rate control

The reference clock module is controlled by the CLKRCON register (Register 7-1) and is enabled when setting the CLKREN bit. To output the divided clock signal to the CLKR port pin, the CLKROE bit must be set. The CLKRDIV<2:0> bits enable the selection of eight different clock divider options. The CLKRDC<1:0> bits can be used to modify the duty cycle of the output clock(1). The CLKRSLR bit controls slew rate limiting.

Note 1:	If the base clock rate is selected without a divider, the output clock will always have a duty cycle equal to that of the source clock, unless a 0% duty cycle is selected. If the clock divider is set to base clock/2, then 25% and 75% duty cycle accuracy will be dependent upon the source clock.

7.1 Slew Rate

The slew rate limitation on the output port pin can be disabled. The slew rate limitation is removed by clearing the CLKRSLR bit in the CLKRCON register.

7.2 Effects of a Reset

Upon any device Reset, the reference clock module is disabled. The user's firmware is responsible for initializing the module before enabling the output. The registers are reset to their default values.

7.3 Conflicts with the CLKR Pin

There are two cases when the reference clock output signal cannot be output to the CLKR pin, if:

- LP, XT or HS Oscillator mode is selected.
- CLKOUT function is enabled.

7.3.1 OSCILLATOR MODES

If LP, XT or HS oscillator modes are selected, the OSC2/CLKR pin must be used as an oscillator input pin and the CLKR output cannot be enabled. See **Section 6.2 "Clock Source Types"**for more information on different oscillator modes.

7.3.2 CLKOUT FUNCTION

The CLKOUT function has a higher priority than the reference clock module. Therefore, if the CLKOUT function is enabled by the $\overline{\text{CLKOUTEN}}$ bit in Configuration Words, FOSC/4 will always be output on the port pin. Reference **Section 4.0 "Device Configuration"** for more information.

7.4 Operation During Sleep

As the reference clock module relies on the system clock as its source, and the system clock is disabled in Sleep, the module does not function in Sleep, even if an external clock source or the Timer1 clock source is configured as the system clock. The module outputs will remain in their current state until the device exits Sleep.

7.5 Register Definition: Reference Clock Control

REGISTER 7-1: CLKRCON: REFERENCE CLOCK CONTROL REGISTER

R/W-0/0	R/W-0/0	R/W-1/1	R/W-1/1	R/W-0/0	R/W-0/0	R/W-0/0	R/W-0/0
CLKREN	CLKROE	CLKRSLR	CLKRDC<1:0>		CLKRDIV<2:0>		
bit 7							bit 0

Legend:		
R = Readable bit	W = Writable bit	U = Unimplemented bit, read as ‘0’
u = Bit is unchanged	x = Bit is unknown	-n/n = Value at POR and BOR/Value at all other Resets
‘1’ = Bit is set	‘0’ = Bit is cleared	

bit 7 **CLKREN:** Reference Clock Module Enable bit
- 1 = Reference clock module is enabled
- 0 = Reference clock module is disabled

bit 6 **CLKROE:** Reference Clock Output Enable bit
- 1 = Reference clock output is enabled on CLKR pin
- 0 = Reference clock output disabled on CLKR pin

bit 5 **CLKRSLR:** Reference Clock Slew Rate Control Limiting Enable bit
- 1 = Slew rate limiting is enabled
- 0 = Slew rate limiting is disabled

bit 4-3 **CLKRDC<1:0>:** Reference Clock Duty Cycle bits
- 11 = Clock outputs duty cycle of 75%
- 10 = Clock outputs duty cycle of 50%
- 01 = Clock outputs duty cycle of 25%
- 00 = Clock outputs duty cycle of 0%

bit 2-0 **CLKRDIV<2:0>** Reference Clock Divider bits
- 111 = Base clock value divided by 128
- 110 = Base clock value divided by 64
- 101 = Base clock value divided by 32
- 100 = Base clock value divided by 16
- 011 = Base clock value divided by 8
- 010 = Base clock value divided by 4
- 001 = Base clock value divided by 2(1)
- 000 = Base clock value(2)

Note 1: In this mode, the 25% and 75% duty cycle accuracy will be dependent on the source clock duty cycle.

2: In this mode, the duty cycle will always be equal to the source clock duty cycle, unless a duty cycle of 0% is selected.

3: To route CLKR to pin, $\overline{\text{CLKOUTEN}}$ of Configuration Words = 1 is required. $\overline{\text{CLKOUTEN}}$ of Configuration Words = 0 will result in FOSC/4. See **Section 7.3 “Conflicts with the CLKR Pin”** for details.

© 2012-2014 Microchip Technology Inc.

TABLE 7-1: SUMMARY OF REGISTERS ASSOCIATED WITH REFERENCE CLOCK SOURCES

Name	Bit 7	Bit 6	Bit 5	Bit 4	Bit 3	Bit 2	Bit 1	Bit 0	Register on Page
CLKRCON	CLKREN	CLKROE	CLKRSLR	CLKRDC<1:0>		CLKRDIV<2:0>			86

Legend: — = unimplemented locations read as '0'. Shaded cells are not used by reference clock sources.

TABLE 7-2: SUMMARY OF CONFIGURATION WORD WITH REFERENCE CLOCK SOURCES

Name	Bits	Bit -/7	Bit -/6	Bit 13/5	Bit 12/4	Bit 11/3	Bit 10/2	Bit 9/1	Bit 8/0	Register on Page
CONFIG1	13:8	—	—	FCMEN	IESO	$\overline{\text{CLKOUTEN}}$	BOREN<1:0>		$\overline{\text{CPD}}$	54
	7:0	$\overline{\text{CP}}$	MCLRE	$\overline{\text{PWRTE}}$	WDTE1<:0>		FOSC<2:0>			

Legend: — = unimplemented locations read as '0'. Shaded cells are not used by reference clock sources.

8.0 INTERRUPTS

The interrupt feature allows certain events to preempt normal program flow. Firmware is used to determine the source of the interrupt and act accordingly. Some interrupts can be configured to wake the MCU from Sleep mode.

This chapter contains the following information for Interrupts:

- Operation
- Interrupt Latency
- Interrupts During Sleep
- INT Pin
- Automatic Context Saving

Many peripherals produce interrupts. Refer to the corresponding chapters for details.

A block diagram of the interrupt logic is shown in Figure 8-1.

FIGURE 8-1: INTERRUPT LOGIC

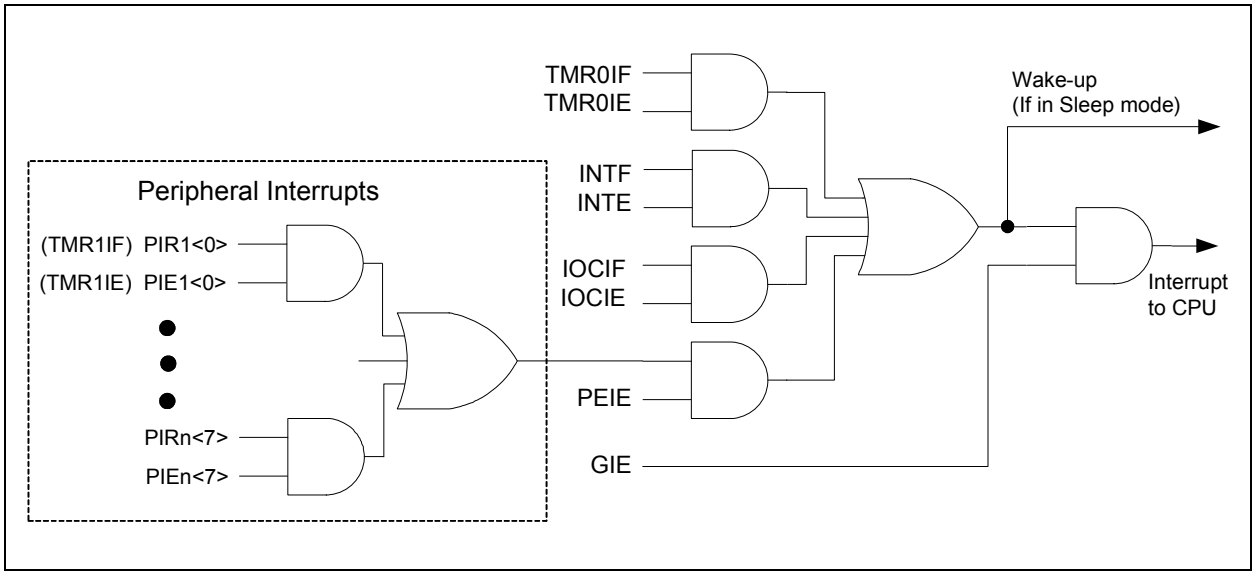

© 2012-2014 Microchip Technology Inc.

8.1 Operation

Interrupts are disabled upon any device Reset. They are enabled by setting the following bits:

- GIE bit of the INTCON register
- Interrupt Enable bit(s) for the specific interrupt event(s)
- PEIE bit of the INTCON register (if the Interrupt Enable bit of the interrupt event is contained in the PIE1 or PIE2 registers)

The INTCON, PIR1 and PIR2 registers record individual interrupts via interrupt flag bits. Interrupt flag bits will be set, regardless of the status of the GIE, PEIE and individual interrupt enable bits.

The following events happen when an interrupt event occurs while the GIE bit is set:

- Current prefetched instruction is flushed
- GIE bit is cleared
- Current Program Counter (PC) is pushed onto the stack
- Critical registers are automatically saved to the shadow registers (See **"Section 8.5 "Automatic Context Saving"."**)
- PC is loaded with the interrupt vector 0004h

The firmware within the Interrupt Service Routine (ISR) should determine the source of the interrupt by polling the interrupt flag bits. The interrupt flag bits must be cleared before exiting the ISR to avoid repeated interrupts. Because the GIE bit is cleared, any interrupt that occurs while executing the ISR will be recorded through its interrupt flag, but will not cause the processor to redirect to the interrupt vector.

The `RETFIE` instruction exits the ISR by popping the previous address from the stack, restoring the saved context from the shadow registers and setting the GIE bit.

For additional information on a specific interrupt's operation, refer to its peripheral chapter.

Note 1:	Individual interrupt flag bits are set, regardless of the state of any other enable bits.
2:	All interrupts will be ignored while the GIE bit is cleared. Any interrupt occurring while the GIE bit is clear will be serviced when the GIE bit is set again.

8.2 Interrupt Latency

Interrupt latency is defined as the time from when the interrupt event occurs to the time code execution at the interrupt vector begins. The latency for synchronous interrupts is three or four instruction cycles. For asynchronous interrupts, the latency is three to five instruction cycles, depending on when the interrupt occurs. See Figure 8-2 and Figure 8.3 for more details.

FIGURE 8-2: INTERRUPT LATENCY

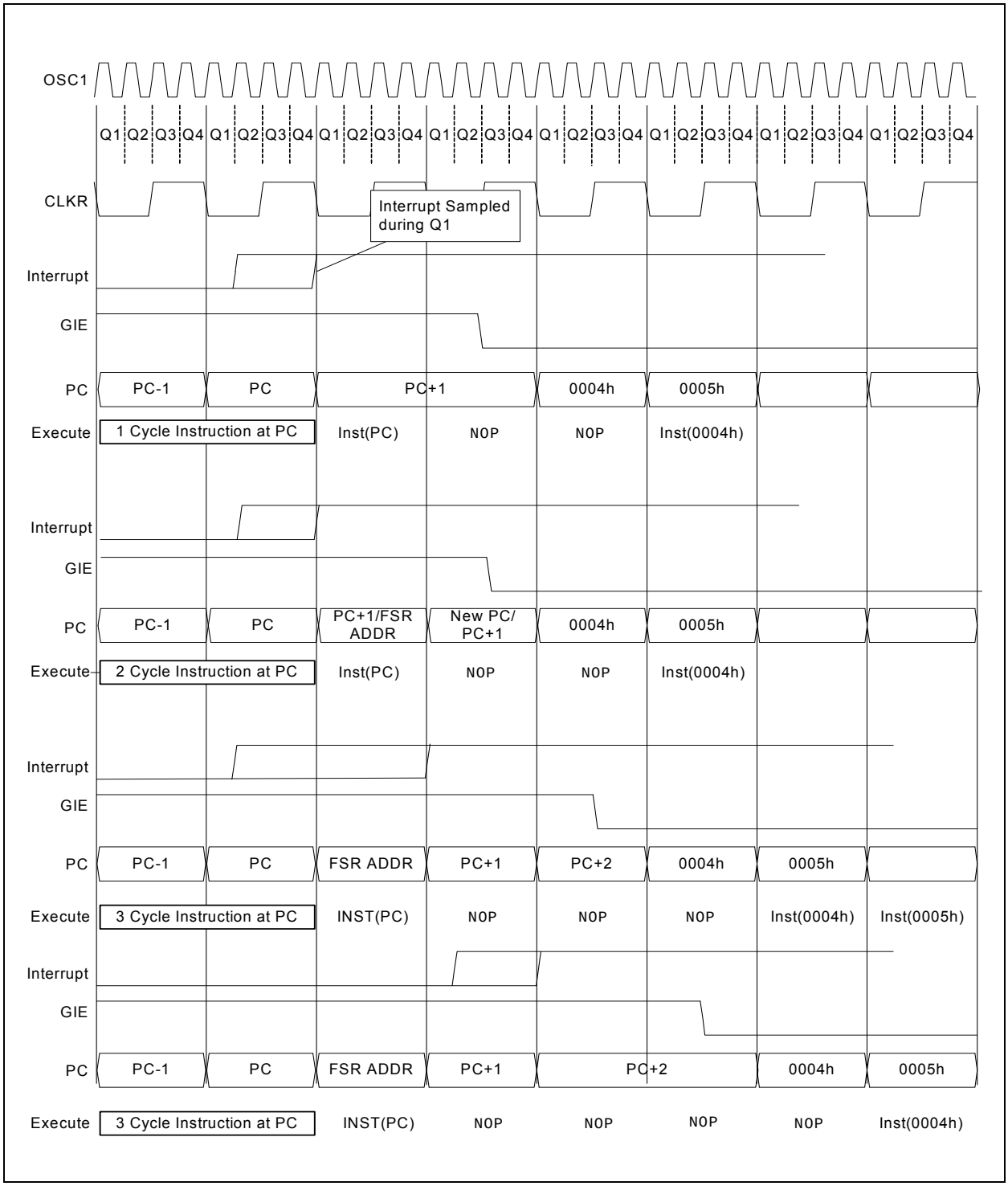

© 2012-2014 Microchip Technology Inc.

FIGURE 8-3: INT PIN INTERRUPT TIMING

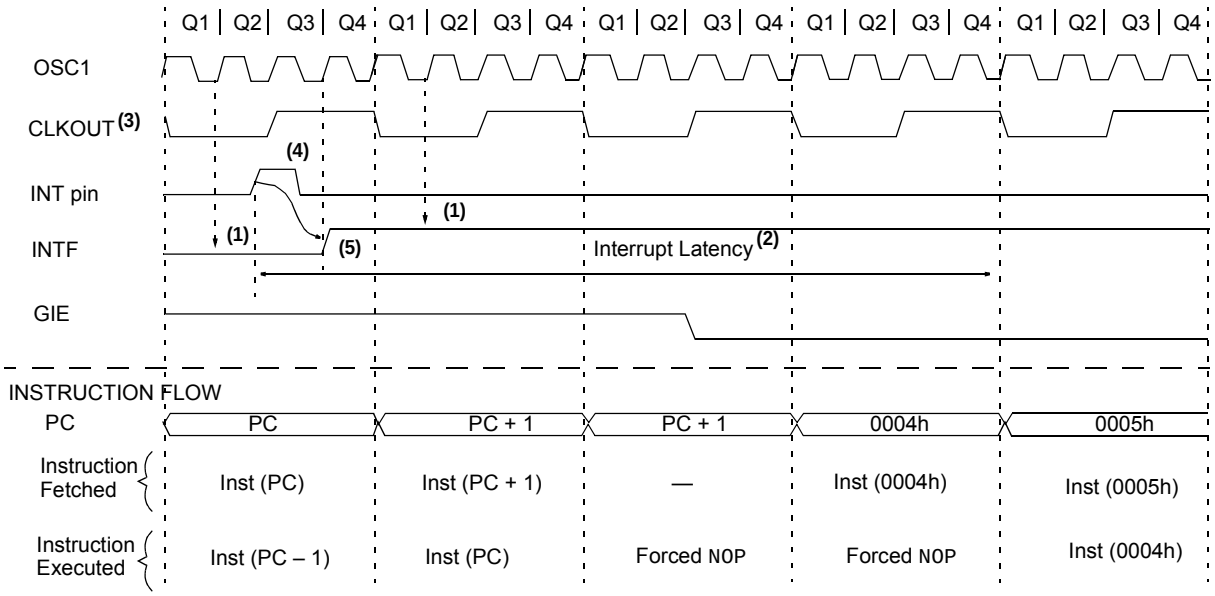

Note 1: INTF flag is sampled here (every Q1).

2: Asynchronous interrupt latency = 3-5 TCY. Synchronous latency = 3-4 TCY, where TCY = instruction cycle time. Latency is the same whether Inst (PC) is a single cycle or a 2-cycle instruction.

3: CLKOUT not available in all oscillator modes.

4: For minimum width of INT pulse, refer to AC specifications in **Section 30.0 "Electrical Specifications"**".

5: INTF is enabled to be set any time during the Q4-Q1 cycles.

8.3 Interrupts During Sleep

Some interrupts can be used to wake from Sleep. To wake from Sleep, the peripheral must be able to operate without the system clock. The interrupt source must have the appropriate Interrupt Enable bit(s) set prior to entering Sleep.

On waking from Sleep, if the GIE bit is also set, the processor will branch to the interrupt vector. Otherwise, the processor will continue executing instructions after the SLEEP instruction. The instruction directly after the SLEEP instruction will always be executed before branching to the ISR. Refer to **Section 9.0 "Power-Down Mode (Sleep)"** for more details.

8.4 INT Pin

The INT pin can be used to generate an asynchronous edge-triggered interrupt. This interrupt is enabled by setting the INTE bit of the INTCON register. The INTEDG bit of the OPTION_REG register determines on which edge the interrupt will occur. When the INTEDG bit is set, the rising edge will cause the interrupt. When the INTEDG bit is clear, the falling edge will cause the interrupt. The INTF bit of the INTCON register will be set when a valid edge appears on the INT pin. If the GIE and INTE bits are also set, the processor will redirect program execution to the interrupt vector.

8.5 Automatic Context Saving

Upon entering an interrupt, the return PC address is saved on the stack. Additionally, the following registers are automatically saved in the shadow registers:

- W register
- STATUS register (except for $\overline{TO}$ and $\overline{PD}$)
- BSR register
- FSR registers
- PCLATH register

Upon exiting the Interrupt Service Routine, these registers are automatically restored. Any modifications to these registers during the ISR will be lost. If modifications to any of these registers are desired, the corresponding shadow register should be modified and the value will be restored when exiting the ISR. The shadow registers are available in Bank 31 and are readable and writable. Depending on the user's application, other registers may also need to be saved.

© 2012-2014 Microchip Technology Inc.

8.6 Register Definitions: Interrupt Control

REGISTER 8-1: INTCON: INTERRUPT CONTROL REGISTER

R/W-0/0	R/W-0/0	R/W-0/0	R/W-0/0	R/W-0/0	R/W-0/0	R/W-0/0	R-0/0
GIE	PEIE	TMR0IE	INTE	IOCIE	TMR0IF	INTF	IOCIF(1)
bit 7							bit 0

Legend:		
R = Readable bit	W = Writable bit	U = Unimplemented bit, read as ‘0’
u = Bit is unchanged	x = Bit is unknown	-n/n = Value at POR and BOR/Value at all other Resets
‘1’ = Bit is set	‘0’ = Bit is cleared	

bit 7 **GIE:** Global Interrupt Enable bit
1 = Enables all active interrupts
0 = Disables all interrupts

bit 6 **PEIE:** Peripheral Interrupt Enable bit
1 = Enables all active peripheral interrupts
0 = Disables all peripheral interrupts

bit 5 **TMR0IE:** Timer0 Overflow Interrupt Enable bit
1 = Enables the Timer0 interrupt
0 = Disables the Timer0 interrupt

bit 4 **INTE:** INT External Interrupt Enable bit
1 = Enables the INT external interrupt
0 = Disables the INT external interrupt

bit 3 **IOCIE:** Interrupt-on-Change Enable bit
1 = Enables the interrupt-on-change
0 = Disables the interrupt-on-change

bit 2 **TMR0IF:** Timer0 Overflow Interrupt Flag bit
1 = TMR0 register has overflowed
0 = TMR0 register did not overflow

bit 1 **INTF:** INT External Interrupt Flag bit
1 = The INT external interrupt occurred
0 = The INT external interrupt did not occur

bit 0 **IOCIF:** Interrupt-on-Change Interrupt Flag bit(1)
1 = When at least one of the interrupt-on-change pins changed state
0 = None of the interrupt-on-change pins have changed state

Note 1: The IOCIF Flag bit is read-only and cleared when all the Interrupt-on-change flags in the IOCBF register have been cleared by software.

Note: Interrupt flag bits are set when an interrupt condition occurs, regardless of the state of its corresponding enable bit or the Global Enable bit, GIE, of the INTCON register. User software should ensure the appropriate interrupt flag bits are clear prior to enabling an interrupt.

REGISTER 8-2: PIE1: PERIPHERAL INTERRUPT ENABLE REGISTER 1

R/W-0/0	R/W-0/0	R/W-0/0	R/W-0/0	R/W-0/0	R/W-0/0	R/W-0/0	R/W-0/0
TMR1GIE	ADIE	RCIE	TXIE	SSP1IE	CCP1IE	TMR2IE	TMR1IE
bit 7							bit 0

Legend:		
R = Readable bit	W = Writable bit	U = Unimplemented bit, read as ‘0’
u = Bit is unchanged	x = Bit is unknown	-n/n = Value at POR and BOR/Value at all other Resets
‘1’ = Bit is set	‘0’ = Bit is cleared	

bit 7 **TMR1GIE:** Timer1 Gate Interrupt Enable bit
1 = Enables the Timer1 gate acquisition interrupt
0 = Disables the Timer1 gate acquisition interrupt

bit 6 **ADIE:** Analog-to-Digital Converter (ADC) Interrupt Enable bit
1 = Enables the ADC interrupt
0 = Disables the ADC interrupt

bit 5 **RCIE:** EUSART Receive Interrupt Enable bit
1 = Enables the EUSART receive interrupt
0 = Disables the EUSART receive interrupt

bit 4 **TXIE:** EUSART Transmit Interrupt Enable bit
1 = Enables the EUSART transmit interrupt
0 = Disables the EUSART transmit interrupt

bit 3 **SSP1IE:** Synchronous Serial Port (MSSP) Interrupt Enable bit
1 = Enables the MSSP interrupt
0 = Disables the MSSP interrupt

bit 2 **CCP1IE:** CCP1 Interrupt Enable bit
1 = Enables the CCP1 interrupt
0 = Disables the CCP1 interrupt

bit 1 **TMR2IE:** TMR2 to PR2 Match Interrupt Enable bit
1 = Enables the Timer2 to PR2 match interrupt
0 = Disables the Timer2 to PR2 match interrupt

bit 0 **TMR1IE:** Timer1 Overflow Interrupt Enable bit
1 = Enables the Timer1 overflow interrupt
0 = Disables the Timer1 overflow interrupt

Note: Bit PEIE of the INTCON register must be set to enable any peripheral interrupt.

© 2012-2014 Microchip Technology Inc.

REGISTER 8-3: PIE2: PERIPHERAL INTERRUPT ENABLE REGISTER 2

R/W-0/0	R/W-0/0	R/W-0/0	R/W-0/0	R/W-0/0	R/W-0/0	R/W-0/0	R/W-0/0
OSFIE	C2IE	C1IE	EEIE	BCL1IE	C4IE	C3IE	CCP2IE
bit 7							bit 0

Legend:		
R = Readable bit	W = Writable bit	U = Unimplemented bit, read as ‘0’
u = Bit is unchanged	x = Bit is unknown	-n/n = Value at POR and BOR/Value at all other Resets
‘1’ = Bit is set	‘0’ = Bit is cleared	

bit 7 **OSFIE:** Oscillator Fail Interrupt Enable bit
1 = Enables the Oscillator Fail interrupt
0 = Disables the Oscillator Fail interrupt

bit 6 **C2IE:** Comparator C2 Interrupt Enable bit
1 = Enables the Comparator C2 interrupt
0 = Disables the Comparator C2 interrupt

bit 5 **C1IE:** Comparator C1 Interrupt Enable bit
1 = Enables the Comparator C1 interrupt
0 = Disables the Comparator C1 interrupt

bit 4 **EEIE:** EEPROM Write Completion Interrupt Enable bit
1 = Enables the EEPROM Write Completion interrupt
0 = Disables the EEPROM Write Completion interrupt

bit 3 **BCL1IE:** MSSP Bus Collision Interrupt Enable bit
1 = Enables the MSSP Bus Collision Interrupt
0 = Disables the MSSP Bus Collision Interrupt

bit 2 **C4IE:** Comparator C4 Interrupt Enable bit
1 = Enables the Comparator C4 Interrupt
0 = Disables the Comparator C4 Interrupt

bit 1 **C3IE:** Comparator C3 Interrupt Enable bit
1 = Enables the Comparator C3 Interrupt
0 = Disables the Comparator C3 Interrupt

bit 0 **CCP2IE:** CCP2 Interrupt Enable bit
1 = Enables the CCP2 interrupt
0 = Disables the CCP2 interrupt

Note: Bit PEIE of the INTCON register must be set to enable any peripheral interrupt.

REGISTER 8-4: PIE3: PERIPHERAL INTERRUPT ENABLE REGISTER 3

U-0	U-0	U-0	R/W-0/0	U-0	U-0	U-0	U-0
—	—	—	CCP3IE	—	—	—	—
bit 7							bit 0

Legend:		
R = Readable bit	W = Writable bit	U = Unimplemented bit, read as ‘0’
u = Bit is unchanged	x = Bit is unknown	-n/n = Value at POR and BOR/Value at all other Resets
‘1’ = Bit is set	‘0’ = Bit is cleared	

bit 7-5 **Unimplemented:** Read as ‘0’

bit 4 **CCP3IE:** CCP3 Interrupt Enable bit
1 = Enables the CCP3 interrupt
0 = Disables the CCP3 interrupt

bit 3-0 **Unimplemented:** Read as ‘0’

© 2012-2014 Microchip Technology Inc.

REGISTER 8-5: PIE4: PERIPHERAL INTERRUPT ENABLE REGISTER 4

U-0	R/W-0/0	R/W-0/0	R/W-0/0	U-0	R/W-0/0	R/W-0/0	R/W-0/0
—	PSMC3TIE	PSMC2TIE	PSMC1TIE	—	PSMC3SIE	PSMC2SIE	PSMC1SIE
bit 7							bit 0

Legend:		
R = Readable bit	W = Writable bit	U = Unimplemented bit, read as ‘0’
u = Bit is unchanged	x = Bit is unknown	-n/n = Value at POR and BOR/Value at all other Resets
‘1’ = Bit is set	‘0’ = Bit is cleared	

bit 7 **Unimplemented:** Read as ‘0’

bit 6 **PSMC3TIE:** PSMC3 Time Base Interrupt Enable bit
1 = Enables PSMC3 time base generated interrupts
0 = Disables PSMC3 time base generated interrupts

bit 5 **PSMC2TIE:** PSMC2 Time Base Interrupt Enable bit
1 = Enables PSMC2 time base generated interrupts
0 = Disables PSMC2 time base generated interrupts

bit 4 **PSMC1TIE:** PSMC1 Time Base Interrupt Enable bit
1 = Enables PSMC1 time base generated interrupts
0 = Disables PSMC1 time base generated interrupts

bit 3 **Unimplemented:** Read as ‘0’

bit 2 **PSMC3SIE:** PSMC3 Auto-Shutdown Interrupt Enable bit
1 = Enables PSMC3 auto-shutdown interrupts
0 = Disables PSMC3 auto-shutdown interrupts

bit 1 **PSMC2SIE:** PSMC2 Auto-Shutdown Interrupt Enable bit
1 = Enables PSMC2 auto-shutdown interrupts
0 = Disables PSMC2 auto-shutdown interrupts

bit 0 **PSMC1SIE:** PSMC1 Auto-Shutdown Interrupt Enable bit
1 = Enables PSMC1 auto-shutdown interrupts
0 = Disables PSMC1 auto-shutdown interrupts

Note: Bit PEIE of the INTCON register must be set to enable any peripheral interrupt.

REGISTER 8-6: PIR1: PERIPHERAL INTERRUPT REQUEST REGISTER 1

R/W-0/0	R/W-0/0	R-0/0	R-0/0	R/W-0/0	R/W-0/0	R/W-0/0	R/W-0/0
TMR1GIF	ADIF	RCIF	TXIF	SSP1IF	CCP1IF	TMR2IF	TMR1IF
bit 7							bit 0

Legend:		
R = Readable bit	W = Writable bit	U = Unimplemented bit, read as ‘0’
u = Bit is unchanged	x = Bit is unknown	-n/n = Value at POR and BOR/Value at all other Resets
‘1’ = Bit is set	‘0’ = Bit is cleared	

bit 7 **TMR1GIF:** Timer1 Gate Interrupt Flag bit
1 = Interrupt is pending
0 = Interrupt is not pending

bit 6 **ADIF:** ADC Converter Interrupt Flag bit
1 = Interrupt is pending
0 = Interrupt is not pending

bit 5 **RCIF:** EUSART Receive Interrupt Flag bit
1 = Interrupt is pending
0 = Interrupt is not pending

bit 4 **TXIF:** EUSART Transmit Interrupt Flag bit
1 = Interrupt is pending
0 = Interrupt is not pending

bit 3 **SSP1IF:** Synchronous Serial Port (MSSP) Interrupt Flag bit
1 = Interrupt is pending
0 = Interrupt is not pending

bit 2 **CCP1IF:** CCP1 Interrupt Flag bit
1 = Interrupt is pending
0 = Interrupt is not pending

bit 1 **TMR2IF:** Timer2 to PR2 Interrupt Flag bit
1 = Interrupt is pending
0 = Interrupt is not pending

bit 0 **TMR1IF:** Timer1 Overflow Interrupt Flag bit
1 = Interrupt is pending
0 = Interrupt is not pending

Note: Interrupt flag bits are set when an interrupt condition occurs, regardless of the state of its corresponding enable bit or the Global Enable bit, GIE, of the INTCON register. User software should ensure the appropriate interrupt flag bits are clear prior to enabling an interrupt.

© 2012-2014 Microchip Technology Inc.

REGISTER 8-7: PIR2: PERIPHERAL INTERRUPT REQUEST REGISTER 2

R/W-0/0	R/W-0/0	R/W-0/0	R/W-0/0	R/W-0/0	R/W-0/0	R/W-0/0	R/W-0/0
OSFIF	C2IF	C1IF	EEIF	BCL1IF	C4IF	C3IF	CCP2IF
bit 7							bit 0

Legend:		
R = Readable bit	W = Writable bit	U = Unimplemented bit, read as ‘0’
u = Bit is unchanged	x = Bit is unknown	-n/n = Value at POR and BOR/Value at all other Resets
‘1’ = Bit is set	‘0’ = Bit is cleared	

bit 7 **OSFIF:** Oscillator Fail Interrupt Flag bit
1 = Interrupt is pending
0 = Interrupt is not pending

bit 6 **C2IF:** Comparator C2 Interrupt Flag bit
1 = Interrupt is pending
0 = Interrupt is not pending

bit 5 **C1IF:** Comparator C1 Interrupt Flag bit
1 = Interrupt is pending
0 = Interrupt is not pending

bit 4 **EEIF:** EEPROM Write Completion Interrupt Flag bit
1 = Interrupt is pending
0 = Interrupt is not pending

bit 3 **BCL1IF:** MSSP Bus Collision Interrupt Flag bit
1 = Interrupt is pending
0 = Interrupt is not pending

bit 2 **C4IF:** Comparator C4 Interrupt Flag bit
1 = Interrupt is pending
0 = Interrupt is not pending

bit 1 **C3IF:** Comparator C3 Interrupt Flag bit
1 = Interrupt is pending
0 = Interrupt is not pending

bit 0 **CCP2IF:** CCP2 Interrupt Flag bit
1 = Interrupt is pending
0 = Interrupt is not pending

Note: Interrupt flag bits are set when an interrupt condition occurs, regardless of the state of its corresponding enable bit or the Global Enable bit, GIE, of the INTCON register. User software should ensure the appropriate interrupt flag bits are clear prior to enabling an interrupt.

REGISTER 8-8: PIR3: PERIPHERAL INTERRUPT REQUEST REGISTER 3

U-0	U-0	U-0	R/W-0/0	U-0	U-0	U-0	U-0
—	—	—	CCP3IF	—	—	—	—
bit 7							bit 0

Legend:		
R = Readable bit	W = Writable bit	U = Unimplemented bit, read as ‘0’
u = Bit is unchanged	x = Bit is unknown	-n/n = Value at POR and BOR/Value at all other Resets
‘1’ = Bit is set	‘0’ = Bit is cleared	

bit 7-5 **Unimplemented:** Read as ‘0’

bit 4 **CCP3IF:** CCP3 Interrupt Flag bit
1 = Interrupt is pending
0 = Interrupt is not pending

bit 3-0 **Unimplemented:** Read as ‘0’

© 2012-2014 Microchip Technology Inc.

REGISTER 8-9: PIR4: PERIPHERAL INTERRUPT REQUEST REGISTER 4

U-0	R/W-0/0	R/W-0/0	R/W-0/0	U-0	R/W-0/0	R/W-0/0	R/W-0/0
—	PSMC3TIF	PSMC2TIF	PSMC1TIF	—	PSMC3SIF	PSMC2SIF	PSMC1SIF
bit 7							bit 0

Legend:		
R = Readable bit	W = Writable bit	U = Unimplemented bit, read as ‘0’
u = Bit is unchanged	x = Bit is unknown	-n/n = Value at POR and BOR/Value at all other Resets
‘1’ = Bit is set	‘0’ = Bit is cleared	

bit 7 **Unimplemented:** Read as ‘0’

bit 6 **PSMC3TIF:** PSMC3 Time Base Interrupt Flag bit
1 = Interrupt is pending
0 = Interrupt is not pending

bit 5 **PSMC2TIF:** PSMC2 Time Base Interrupt Flag bit
1 = Interrupt is pending
0 = Interrupt is not pending

bit 4 **PSMC1TIF:** PSMC1 Time Base Interrupt Flag bit
1 = Interrupt is pending
0 = Interrupt is not pending

bit 3 **Unimplemented:** Read as ‘0’

bit 2 **PSMC3SIF:** PSMC3 Auto-shutdown Flag bit
1 = Interrupt is pending
0 = Interrupt is not pending

bit 1 **PSMC2SIF:** PSMC2 Auto-shutdown Flag bit
1 = Interrupt is pending
0 = Interrupt is not pending

bit 0 **PSMC1SIF:** PSMC1 Auto-shutdown Flag bit
1 = Interrupt is pending
0 = Interrupt is not pending

Note: Interrupt flag bits are set when an interrupt condition occurs, regardless of the state of its corresponding enable bit or the Global Enable bit, GIE, of the INTCON register. User software should ensure the appropriate interrupt flag bits are clear prior to enabling an interrupt.

TABLE 8-1: SUMMARY OF REGISTERS ASSOCIATED WITH INTERRUPTS

Name	Bit 7	Bit 6	Bit 5	Bit 4	Bit 3	Bit 2	Bit 1	Bit 0	Register on Page
INTCON	GIE	PEIE	TMR0IE	INTE	IOCIE	TMR0IF	INTF	IOCIF	93
OPTION_REG	$\overline{\text{WPUEN}}$	INTEDG	TMR0CS	TMR0SE	PSA	PS<2:0>			198
PIE1	TMR1GIE	ADIE	RCIE	TXIE	SSP1IE	CCP1IE	TMR2IE	TMR1IE	94
PIE2	OSFIE	C2IE	C1IE	EEIE	BCL1IE	C4IE	C3IE	CCP2IE	95
PIE3	—	—	—	CCP3IE	—	—	—	—	96
PIE4	—	PSMC3TIE	PSMC2TIE	PSMC1TIE	—	PSMC3SIE	PSMC2SIE	PSMC1SIE	97
PIR1	TMR1GIF	ADIF	RCIF	TXIF	SSP1IF	CCP1IF	TMR2IF	TMR1IF	98
PIR2	OSFIF	C2IF	C1IF	EEIF	BCL1IF	C4IF	C3IF	CCP2IF	99
PIR3	—	—	—	CCP3IF	—	—	—	—	100
PIR4	—	PSMC3TIF	PSMC2TIF	PSMC1TIF	—	PSMC3SIF	PSMC2SIF	PSMC1SIF	101

Legend: — = unimplemented location, read as ‘0’. Shaded cells are not used by interrupts.

© 2012-2014 Microchip Technology Inc.

9.0 POWER-DOWN MODE (SLEEP)

The Power-down mode is entered by executing a SLEEP instruction.

Upon entering Sleep mode, the following conditions exist:

1. WDT will be cleared but keeps running, if enabled for operation during Sleep.
2. $\overline{PD}$ bit of the STATUS register is cleared.
3. $\overline{TO}$ bit of the STATUS register is set.
4. CPU clock is disabled.
5. 31 kHz LFINTOSC is unaffected and peripherals that operate from it may continue operation in Sleep.
6. Timer1 and peripherals that operate from Timer1 continue operation in Sleep when the Timer1 clock source selected is:
   - LFINTOSC
   - T1CKI
   - Timer1 oscillator
7. ADC is unaffected, if the dedicated FRC oscillator is selected.
8. I/O ports maintain the status they had before SLEEP was executed (driving high, low or high-impedance).
9. Resets other than WDT are not affected by Sleep mode.

Refer to individual chapters for more details on peripheral operation during Sleep.

To minimize current consumption, the following conditions should be considered:

- I/O pins should not be floating
- External circuitry sinking current from I/O pins
- Internal circuitry sourcing current from I/O pins
- Current draw from pins with internal weak pull-ups
- Modules using 31 kHz LFINTOSC
- Modules using Timer1 oscillator

I/O pins that are high-impedance inputs should be pulled to VDD or VSS externally to avoid switching currents caused by floating inputs.

Examples of internal circuitry that might be sourcing current include modules such as the DAC and FVR modules. See **Section 19.0 “Digital-to-Analog Converter (DAC) Module”** and **Section 15.0 “Fixed Voltage Reference (FVR)”** for more information on these modules.

9.1 Wake-up from Sleep

The device can wake-up from Sleep through one of the following events:

1. External Reset input on $\overline{MCLR}$ pin, if enabled
2. BOR Reset, if enabled
3. POR Reset
4. Watchdog Timer, if enabled
5. Any external interrupt
6. Interrupts by peripherals capable of running during Sleep (see individual peripheral for more information)

The first three events will cause a device Reset. The last three events are considered a continuation of program execution. To determine whether a device Reset or wake-up event occurred, refer to **Section 5.12 “Determining the Cause of a Reset”**.

When the SLEEP instruction is being executed, the next instruction (PC + 1) is prefetched. For the device to wake-up through an interrupt event, the corresponding interrupt enable bit must be enabled. Wake-up will occur regardless of the state of the GIE bit. If the GIE bit is disabled, the device continues execution at the instruction after the SLEEP instruction. If the GIE bit is enabled, the device executes the instruction after the SLEEP instruction, the device will then call the Interrupt Service Routine. In cases where the execution of the instruction following SLEEP is not desirable, the user should have a NOP after the SLEEP instruction.

The WDT is cleared when the device wakes up from Sleep, regardless of the source of wake-up.

9.1.1 WAKE-UP USING INTERRUPTS

When global interrupts are disabled (GIE cleared) and any interrupt source has both its interrupt enable bit and interrupt flag bit set, one of the following will occur:

- If the interrupt occurs **before** the execution of a SLEEP instruction
  - SLEEP instruction will execute as a NOP.
  - WDT and WDT prescaler will not be cleared
  - $\overline{TO}$ bit of the STATUS register will not be set
  - $\overline{PD}$ bit of the STATUS register will not be cleared.
- If the interrupt occurs **during or after** the execution of a SLEEP instruction
  - SLEEP instruction will be completely executed
  - Device will immediately wake-up from Sleep
  - WDT and WDT prescaler will be cleared
  - $\overline{TO}$ bit of the STATUS register will be set
  - $\overline{PD}$ bit of the STATUS register will be cleared.

Even if the flag bits were checked before executing a SLEEP instruction, it may be possible for flag bits to become set before the SLEEP instruction completes. To determine whether a SLEEP instruction executed, test the $\overline{PD}$ bit. If the $\overline{PD}$ bit is set, the SLEEP instruction was executed as a NOP.

FIGURE 9-1: WAKE-UP FROM SLEEP THROUGH INTERRUPT

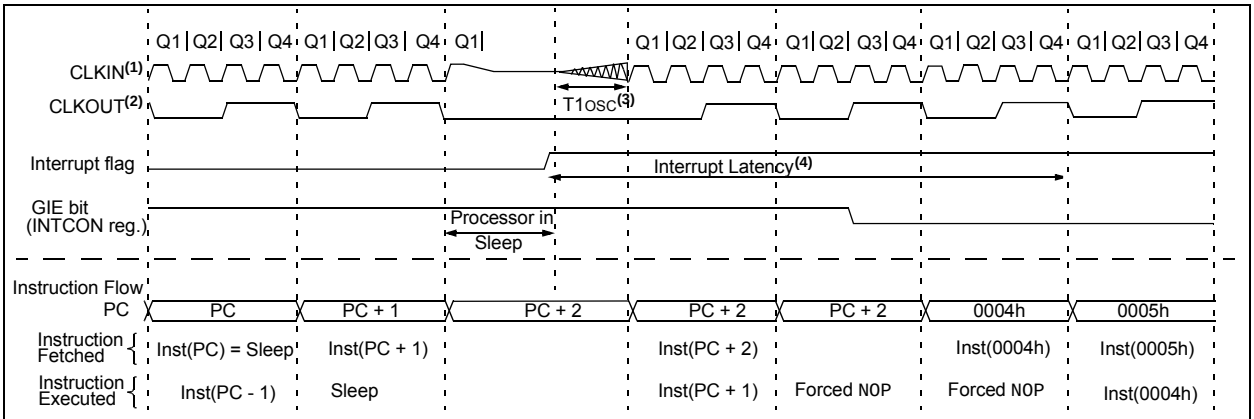

Note 1: External clock. High, Medium, Low mode assumed.
2: CLKOUT is shown here for timing reference.
3: T1osc; See **Section 30.0 "Electrical Specifications"**.
4: GIE = 1 assumed. In this case after wake-up, the processor calls the ISR at 0004h. If GIE = 0, execution will continue in-line.

© 2012-2014 Microchip Technology Inc.

9.2 Low-Power Sleep Mode

"F" devices contain an internal Low Dropout (LDO) voltage regulator, which allows the device I/O pins to operate at voltages up to 5.5V while the internal device logic operates at a lower voltage. The LDO and its associated reference circuitry must remain active when the device is in Sleep mode. "F" devices allow the user to optimize the operating current in Sleep, depending on the application requirements.

A Low-Power Sleep mode can be selected by setting the VREGPM bit of the VREGCON register. With this bit set, the LDO and reference circuitry are placed in a low-power state when the device is in Sleep.

9.2.1 SLEEP CURRENT VS. WAKE-UP TIME

In the default operating mode, the LDO and reference circuitry remain in the normal configuration while in Sleep. The device is able to exit Sleep mode quickly since all circuits remain active. In Low-Power Sleep mode, when waking up from Sleep, an extra delay time is required for these circuits to return to the normal configuration and stabilize.

The Low-Power Sleep mode is beneficial for applications that stay in Sleep mode for long periods of time. The normal mode is beneficial for applications that need to wake from Sleep quickly and frequently.

9.2.2 PERIPHERAL USAGE IN SLEEP

Some peripherals that can operate in Sleep mode will not operate properly with the Low-Power Sleep mode selected. The LDO will remain in the normal power mode when those peripherals are enabled. The Low-Power Sleep mode is intended for use with these peripherals:

- Brown-Out Reset (BOR)
- Watchdog Timer (WDT)
- External interrupt pin/Interrupt-on-change pins
- Timer1 (with external clock source)

Note:	"LF" devices do not have a configurable Low-Power Sleep mode. "LF" devices are an unregulated device and are always in the lowest power state when in Sleep, with no wake-up time penalty. These devices have a lower maximum V_{DD} and I/O voltage than "F" devices. See **Section 30.0 "Electrical Specifications"** for more information.

9.3 Register Definitions: Voltage Regulator Control

REGISTER 9-1: VREGCON: VOLTAGE REGULATOR CONTROL REGISTER(1)

U-0	U-0	U-0	U-0	U-0	U-0	R/W-0/0	R/W-1/1
—	—	—	—	—	—	VREGPM	Reserved
bit 7							bit 0

Legend:		
R = Readable bit	W = Writable bit	U = Unimplemented bit, read as ‘0’
u = Bit is unchanged	x = Bit is unknown	-n/n = Value at POR and BOR/Value at all other Resets
‘1’ = Bit is set	‘0’ = Bit is cleared	

bit 7-2 **Unimplemented:** Read as ‘0’

bit 1 **VREGPM:** Voltage Regulator Power Mode Selection bit
- 1 = Low-Power Sleep mode enabled in Sleep(2)
  Draws lowest current in Sleep, slower wake-up
- 0 = Normal-Power mode enabled in Sleep(2)
  Draws higher current in Sleep, faster wake-up

bit 0 **Reserved:** Read as ‘1’. Maintain this bit set.

Note 1: “F” devices only.
2: See **Section 30.0 “Electrical Specifications”**.

TABLE 9-1: SUMMARY OF REGISTERS ASSOCIATED WITH POWER-DOWN MODE

Name	Bit 7	Bit 6	Bit 5	Bit 4	Bit 3	Bit 2	Bit 1	Bit 0	Register on Page
INTCON	GIE	PEIE	TMR0IE	INTE	IOCIE	TMR0IF	INTF	RAIF	93
IOCBF	IOCBF7	IOCBF6	IOCBF5	IOCBF4	IOCBF3	IOCBF2	IOCBF1	IOCBF0	159
IOCBN	IOCBN7	IOCBN6	IOCBN5	IOCBN4	IOCBN3	IOCBN2	IOCBN1	IOCBN0	158
IOCBP	IOCBP7	IOCBP6	IOCBP5	IOCBP4	IOCBP3	IOCBP2	IOCBP1	IOCBP0	158
PIE1	TMR1GIE	ADIE	RCIE	TXIE	SSP1IE	CCP1IE	TMR2IE	TMR1IE	94
PIE2	OSFIE	C2IE	C1IE	EEIE	BCL1IE	C4IE	C3IE	CCP2IE	95
PIE3	—	—	—	CCP3IE	—	—	—	—	96
PIE4	—	PSMC3TIE	PSMC2TIE	PSMC1TIE	—	PSMC3SIE	PSMC2SIE	PSMC1SIE	97
PIR1	TMR1GIF	ADIF	RCIF	TXIF	SSP1IF	CCP1IF	TMR2IF	TMR1IF	94
PIR2	OSFIF	C2IF	C1IF	EEIF	BCL1IF	C4IF	C3IF	CCP2IF	99
PIR3	—	—	—	CCP3IF	—	—	—	—	100
PIR4	—	PSMC3TIF	PSMC2TIF	PSMC1TIF	—	PSMC3SIF	PSMC2SIF	PSMC1SIF	101
STATUS	—	—	—	$\overline{TO}$	$\overline{PD}$	Z	DC	C	27
VREGCON	—	—	—	—	—	—	VREGPM	Reserved	106
WDTCON	—	—	WDTPS<4:0>					SWDTEN	110

Legend: — = unimplemented location, read as ‘0’. Shaded cells are not used in Power-Down mode.

© 2012-2014 Microchip Technology Inc.

10.0 LOW DROPOUT (LDO) VOLTAGE REGULATOR

The "F" devices have an internal Low Dropout Regulator (LDO) which provide operation above 3.6V. The LDO regulates a voltage for the internal device logic while permitting the VDD and I/O pins to operate at a higher voltage. There is no user enable/disable control available for the LDO, it is always active. The "LF" devices operate at a maximum VDD of 3.6V and does not incorporate an LDO.

A device I/O pin may be configured as the LDO voltage output, identified as the VCAP pin. Although not required, an external low-ESR capacitor may be connected to the VCAP pin for additional regulator stability.

The $\overline{\text{VCAPEN}}$ bit of Configuration Words determines if which pin is assigned as the VCAP pin. Refer to Table 10-1.

On power-up, the external capacitor will load the LDO voltage regulator. To prevent erroneous operation, the device is held in Reset while a constant current source charges the external capacitor. After the cap is fully charged, the device is released from Reset. For more information on the constant current rate, refer to the LDO Regulator Characteristics Table in **Section 30.0 "Electrical Specifications"**.

TABLE 10-1: $\overline{\text{VCAPEN}}$ SELECT BIT

$\overline{\text{VCAPEN}}$	Pin
1	No VCAP
0	RA6

TABLE 10-2: SUMMARY OF CONFIGURATION WORD WITH LDO

Name	Bits	Bit -/7	Bit -/6	Bit 13/5	Bit 12/4	Bit 11/3	Bit 10/2	Bit 9/1	Bit 8/0	Register on Page
CONFIG2	13:8	—	—	LVP	$\overline{\text{DEBUG}}$	$\overline{\text{LPBOR}}$	BORV	STVREN	PLLEN	56
	7:0	—	—	$\overline{\text{VCAPEN}}$(1)	—	—	—	WRT<1:0>		

Legend: — = unimplemented locations read as '0'. Shaded cells are not used by LDO.
Note 1: "F" devices only.

11.0 WATCHDOG TIMER (WDT)

The Watchdog Timer is a system timer that generates a Reset if the firmware does not issue a `CLRWDT` instruction within the time-out period. The Watchdog Timer is typically used to recover the system from unexpected events.

The WDT has the following features:

- Independent clock source
- Multiple operating modes
  - WDT is always on
  - WDT is off when in Sleep
  - WDT is controlled by software
  - WDT is always off
- Configurable time-out period is from 1 ms to 256 seconds (nominal)
- Multiple Reset conditions
- Operation during Sleep

FIGURE 11-1: WATCHDOG TIMER BLOCK DIAGRAM

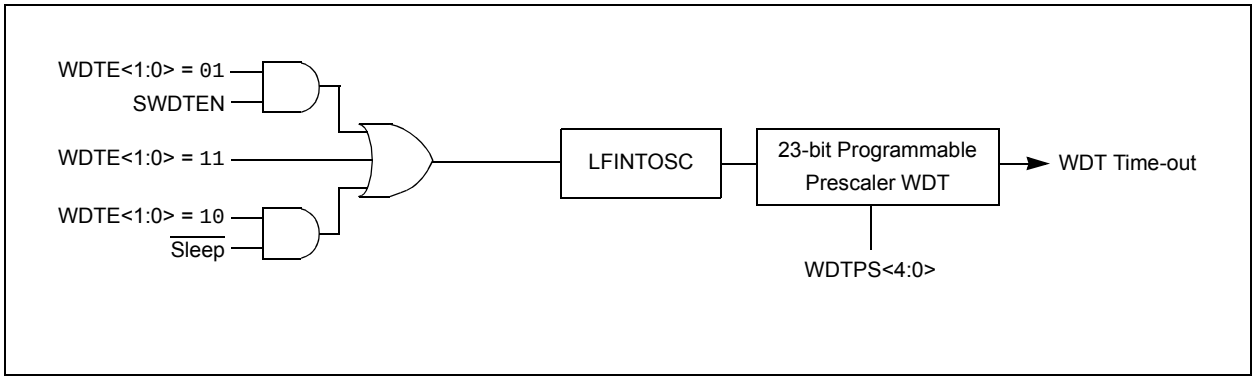

© 2012-2014 Microchip Technology Inc.

11.1 Independent Clock Source

The WDT derives its time base from the 31 kHz LFINTOSC internal oscillator. Time intervals in this chapter are based on a nominal interval of 1 ms. See **Section 30.0 "Electrical Specifications"** for the LFINTOSC tolerances.

11.2 WDT Operating Modes

The Watchdog Timer module has four operating modes controlled by the WDTE<1:0> bits in Configuration Words. See Table 11-1.

11.2.1 WDT IS ALWAYS ON

When the WDTE bits of Configuration Words are set to '11', the WDT is always on.

WDT protection is active during Sleep.

11.2.2 WDT IS OFF IN SLEEP

When the WDTE bits of Configuration Words are set to '10', the WDT is on, except in Sleep.

WDT protection is not active during Sleep.

11.2.3 WDT CONTROLLED BY SOFTWARE

When the WDTE bits of Configuration Words are set to '01', the WDT is controlled by the SWDTEN bit of the WDTCON register.

WDT protection is unchanged by Sleep. See Table 11-1 for more details.

TABLE 11-1: WDT OPERATING MODES

WDTE<1:0>	SWDTEN	Device Mode	WDT Mode
11	X	X	Active
10	X	Awake	Active
		Sleep	Disabled
01	1	X	Active
	0		Disabled
00	X	X	Disabled

11.3 Time-Out Period

The WDTPS bits of the WDTCON register set the time-out period from 1 ms to 256 seconds (nominal). After a Reset, the default time-out period is two seconds.

11.4 Clearing the WDT

The WDT is cleared when any of the following conditions occur:

- Any Reset
- CLRWDT instruction is executed
- Device enters Sleep
- Device wakes up from Sleep
- Oscillator fail
- WDT is disabled
- Oscillator Start-up TImer (OST) is running

See Table 11-2 for more information.

11.5 Operation During Sleep

When the device enters Sleep, the WDT is cleared. If the WDT is enabled during Sleep, the WDT resumes counting.

When the device exits Sleep, the WDT is cleared again. The WDT remains clear until the OST, if enabled, completes. See **Section 6.0 "Oscillator Module (with Fail-Safe Clock Monitor)"** for more information on the OST.

When a WDT time-out occurs while the device is in Sleep, no Reset is generated. Instead, the device wakes up and resumes operation. The $\overline{TO}$ and $\overline{PD}$ bits in the STATUS register are changed to indicate the event. See **Section 3.0 "Memory Organization"** and Status Register (Register 3-1) for more information.

TABLE 11-2: WDT CLEARING CONDITIONS

Conditions	WDT
WDTE<1:0> = 00	Cleared
WDTE<1:0> = 01 and SWDTEN = 0	
WDTE<1:0> = 10 and enter Sleep	
CLRWDT Command	
Oscillator Fail Detected	
Exit Sleep + System Clock = T1OSC, EXTRC, INTOSC, EXTCLK	
Exit Sleep + System Clock = XT, HS, LP	Cleared until the end of OST
Change INTOSC divider (IRCF bits)	Unaffected

11.6 Register Definitions: Watchdog Control

REGISTER 11-1: WDTCON: WATCHDOG TIMER CONTROL REGISTER

U-0	U-0	R/W-0/0	R/W-1/1	R/W-0/0	R/W-1/1	R/W-1/1	R/W-0/0
—	—	WDTPS<4:0>					SWDTEN
bit 7							bit 0

Legend:		
R = Readable bit	W = Writable bit	U = Unimplemented bit, read as ‘0’
u = Bit is unchanged	x = Bit is unknown	-m/n = Value at POR and BOR/Value at all other Resets
‘1’ = Bit is set	‘0’ = Bit is cleared	

bit 7-6 **Unimplemented:** Read as ‘0’

bit 5-1 **WDTPS<4:0>:** Watchdog Timer Period Select bits(1)

Bit Value = Prescale Rate

11111 = Reserved. Results in minimum interval (1:32)
•
•
•
10011 = Reserved. Results in minimum interval (1:32)

10010 = 1:8388608 (2^{23}) (Interval 256s nominal)
10001 = 1:4194304 (2^{22}) (Interval 128s nominal)
10000 = 1:2097152 (2^{21}) (Interval 64s nominal)
01111 = 1:1048576 (2^{20}) (Interval 32s nominal)
01110 = 1:524288 (2^{19}) (Interval 16s nominal)
01101 = 1:262144 (2^{18}) (Interval 8s nominal)
01100 = 1:131072 (2^{17}) (Interval 4s nominal)
01011 = 1:65536 (Interval 2s nominal) (Reset value)
01010 = 1:32768 (Interval 1s nominal)
01001 = 1:16384 (Interval 512 ms nominal)
01000 = 1:8192 (Interval 256 ms nominal)
00111 = 1:4096 (Interval 128 ms nominal)
00110 = 1:2048 (Interval 64 ms nominal)
00101 = 1:1024 (Interval 32 ms nominal)
00100 = 1:512 (Interval 16 ms nominal)
00011 = 1:256 (Interval 8 ms nominal)
00010 = 1:128 (Interval 4 ms nominal)
00001 = 1:64 (Interval 2 ms nominal)
00000 = 1:32 (Interval 1 ms nominal)

bit 0 **SWDTEN:** Software Enable/Disable for Watchdog Timer bit

If WDTE<1:0> = 1x:
This bit is ignored.
If WDTE<1:0> = 01:
1 = WDT is turned on
0 = WDT is turned off
If WDTE<1:0> = 00:
This bit is ignored.

Note 1: Times are approximate. WDT time is based on 31 kHz LFINTOSC.

© 2012-2014 Microchip Technology Inc.

TABLE 11-3: SUMMARY OF REGISTERS ASSOCIATED WITH WATCHDOG TIMER

Name	Bit 7	Bit 6	Bit 5	Bit 4	Bit 3	Bit 2	Bit 1	Bit 0	Register on Page
OSCCON	SPLLEN	IRCF<3:0>				—	SCS<1:0>		82
STATUS	—	—	—	$\overline{TO}$	$\overline{PD}$	Z	DC	C	27
WDTCON	—	—	WDTPS<4:0>					SWDTEN	110

Legend: x = unknown, u = unchanged, – = unimplemented locations read as '0'. Shaded cells are not used by Watchdog Timer.

TABLE 11-4: SUMMARY OF CONFIGURATION WORD WITH WATCHDOG TIMER

Name	Bits	Bit -/7	Bit -/6	Bit 13/5	Bit 12/4	Bit 11/3	Bit 10/2	Bit 9/1	Bit 8/0	Register on Page
CONFIG1	13:8	—	—	FCMEN	IESO	$\overline{CLKOUTEN}$	BOREN<1:0>		$\overline{CPD}$	54
	7:0	$\overline{CP}$	MCLRE	$\overline{PWRTE}$	WDTE<1:0>		FOSC<2:0>			

Legend: — = unimplemented location, read as '0'. Shaded cells are not used by Watchdog Timer.

12.0 DATA EEPROM AND FLASH PROGRAM MEMORY CONTROL

The data EEPROM and Flash program memory are readable and writable during normal operation (full VDD range). These memories are not directly mapped in the register file space. Instead, they are indirectly addressed through the Special Function Registers (SFRs). There are six SFRs used to access these memories:

- EECON1
- EECON2
- EEDATL
- EEDATH
- EEADRL
- EEADRH

When interfacing the data memory block, EEDATL holds the 8-bit data for read/write, and EEADRL holds the address of the EEDATL location being accessed. These devices have 256 bytes of data EEPROM with an address range from 0h to 0FFh.

When accessing the program memory block, the EEDATH:EEDATL register pair forms a 2-byte word that holds the 14-bit data for read/write, and the EEADRL and EEADRH registers form a 2-byte word that holds the 15-bit address of the program memory location being read.

The EEPROM data memory allows byte read and write. An EEPROM byte write automatically erases the location and writes the new data (erase before write).

The write time is controlled by an on-chip timer. The write/erase voltages are generated by an on-chip charge pump rated to operate over the voltage range of the device for byte or word operations.

Depending on the setting of the Flash Program Memory Self Write Enable bits WRT<1:0> of the Configuration Words, the device may or may not be able to write certain blocks of the program memory. However, reads from the program memory are always allowed.

When the device is code-protected, the device programmer can no longer access data or program memory. When code-protected, the CPU may continue to read and write the data EEPROM memory and Flash program memory.

12.1 EEADRL and EEADRH Registers

The EEADRH:EEADRL register pair can address up to a maximum of 256 bytes of data EEPROM or up to a maximum of 32K words of program memory.

When selecting a program address value, the MSB of the address is written to the EEADRH register and the LSB is written to the EEADRL register. When selecting a EEPROM address value, only the LSB of the address is written to the EEADRL register.

12.1.1 EECON1 AND EECON2 REGISTERS

EECON1 is the control register for EE memory accesses.

Control bit EEPGD determines if the access will be a program or data memory access. When clear, any subsequent operations will operate on the EEPROM memory. When set, any subsequent operations will operate on the program memory. On Reset, EEPROM is selected by default.

Control bits RD and WR initiate read and write, respectively. These bits cannot be cleared, only set, in software. They are cleared in hardware at completion of the read or write operation. The inability to clear the WR bit in software prevents the accidental, premature termination of a write operation.

The WREN bit, when set, will allow a write operation to occur. On power-up, the WREN bit is clear. The WRERR bit is set when a write operation is interrupted by a Reset during normal operation. In these situations, following Reset, the user can check the WRERR bit and execute the appropriate error handling routine.

Interrupt flag bit EEIF of the PIR2 register is set when write is complete. It must be cleared in the software.

Reading EECON2 will read all ‘0’s. The EECON2 register is used exclusively in the data EEPROM write sequence. To enable writes, a specific pattern must be written to EECON2.

© 2012-2014 Microchip Technology Inc.

12.2 Using the Data EEPROM

The data EEPROM is a high-endurance, byte addressable array that has been optimized for the storage of frequently changing information (e.g., program variables or other data that are updated often). When variables in one section change frequently, while variables in another section do not change, it is possible to exceed the total number of write cycles to the EEPROM without exceeding the total number of write cycles to a single byte. Refer to **Section 30.0 "Electrical Specifications"**. If this is the case, then a refresh of the array must be performed. For this reason, variables that change infrequently (such as constants, IDs, calibration, etc.) should be stored in Flash program memory.

12.2.1 READING THE DATA EEPROM MEMORY

To read a data memory location, the user must write the address to the EEADRL register, clear the EEPGD and CFGS control bits of the EECON1 register, and then set control bit RD. The data is available at the very next cycle, in the EEDATL register; therefore, it can be read in the next instruction. EEDATL will hold this value until another read or until it is written to by the user (during a write operation).

EXAMPLE 12-1: DATA EEPROM READ

```
BANKSEL EEADRL       ;
MOVLW   DATA_EE_ADDR ;
MOVWF   EEADRL       ;Data Memory
                     ;Address to read
BCF     EECON1, CFGS ;Deselect Config space
BCF     EECON1, EEPGD;Point to DATA memory
BSF     EECON1, RD   ;EE Read
MOVF    EEDATL, W    ;W = EEDATL
```

Note: Data EEPROM can be read regardless of the setting of the $\overline{\text{CPD}}$ bit.

12.2.2 WRITING TO THE DATA EEPROM MEMORY

To write an EEPROM data location, the user must first write the address to the EEADRL register and the data to the EEDATL register. Then the user must follow a specific sequence to initiate the write for each byte.

The write will not initiate if the above sequence is not followed exactly (write 55h to EECON2, write AAh to EECON2, then set the WR bit) for each byte. Interrupts should be disabled during this code segment.

Additionally, the WREN bit in EECON1 must be set to enable write. This mechanism prevents accidental writes to data EEPROM due to errant (unexpected) code execution (i.e., lost programs). The user should keep the WREN bit clear at all times, except when updating EEPROM. The WREN bit is not cleared by hardware.

After a write sequence has been initiated, clearing the WREN bit will not affect this write cycle. The WR bit will be inhibited from being set unless the WREN bit is set.

At the completion of the write cycle, the WR bit is cleared in hardware and the EE Write Complete Interrupt Flag bit (EEIF) is set. The user can either enable this interrupt or poll this bit. EEIF must be cleared by software.

12.2.3 PROTECTION AGAINST SPURIOUS WRITE

There are conditions when the user may not want to write to the data EEPROM memory. To protect against spurious EEPROM writes, various mechanisms have been built-in. On power-up, WREN is cleared. Also, the Power-up Timer (64 ms duration) prevents EEPROM write.

The write initiate sequence and the WREN bit together help prevent an accidental write during:

- Brown-out
- Power Glitch
- Software Malfunction

12.2.4 DATA EEPROM OPERATION DURING CODE-PROTECT

Data memory can be code-protected by programming the $\overline{\text{CPD}}$ bit in the Configuration Words to '0'.

When the data memory is code-protected, only the CPU is able to read and write data to the data EEPROM. It is recommended to code-protect the program memory when code-protecting data memory. This prevents anyone from replacing your program with a program that will access the contents of the data EEPROM.

EXAMPLE 12-2: DATA EEPROM WRITE

```
        BANKSEL  EEADRL         ;
        MOVLW    DATA_EE_ADDR   ;
        MOVWF    EEADRL         ;Data Memory Address to write
        MOVLW    DATA_EE_DATA   ;
        MOVWF    EEDATL         ;Data Memory Value to write
        BCF      EECON1, CFGS   ;Deselect Configuration space
        BCF      EECON1, EEPGD  ;Point to DATA memory
        BSF      EECON1, WREN   ;Enable writes

        BCF      INTCON, GIE    ;Disable INTs.
        MOVLW    55h            ;
        MOVWF    EECON2         ;Write 55h
        MOVLW    0AAh           ;
        MOVWF    EECON2         ;Write AAh
        BSF      EECON1, WR     ;Set WR bit to begin write
        BSF      INTCON, GIE    ;Enable Interrupts
        BCF      EECON1, WREN   ;Disable writes
        BTFSC    EECON1, WR     ;Wait for write to complete
        GOTO     $-2            ;Done
```

Required Sequence

FIGURE 12-1: FLASH PROGRAM MEMORY READ CYCLE EXECUTION

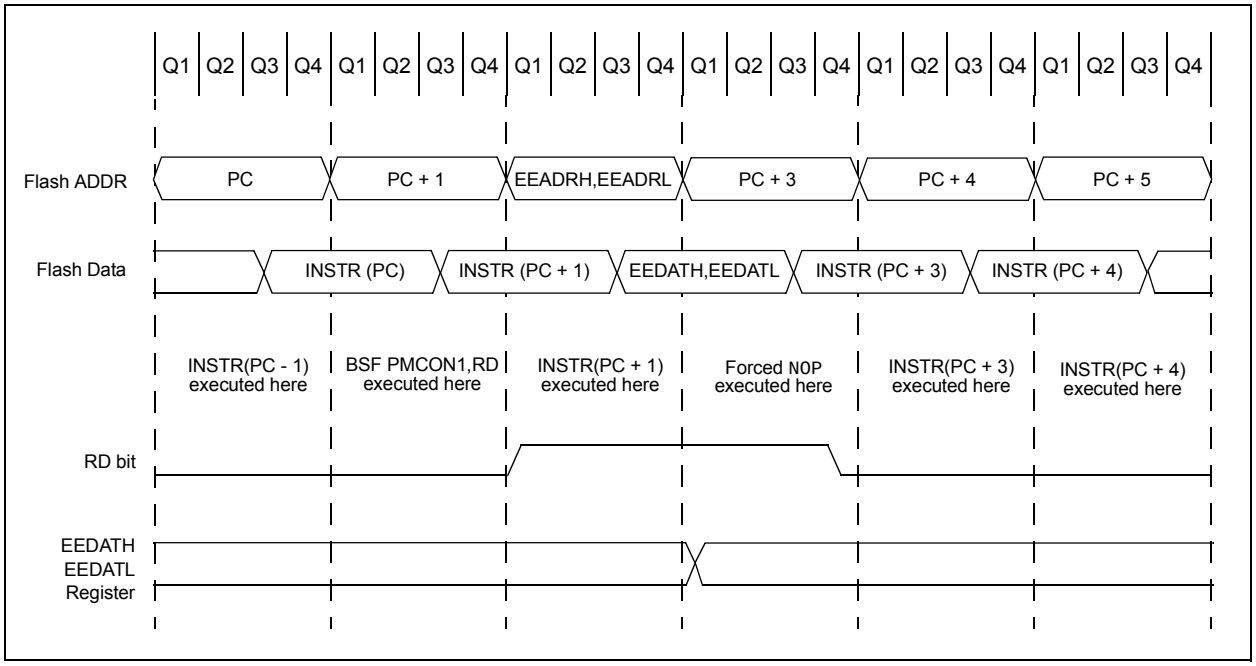

© 2012-2014 Microchip Technology Inc.

12.3 Flash Program Memory Overview

It is important to understand the Flash program memory structure for erase and programming operations. Flash program memory is arranged in rows. A row consists of a fixed number of 14-bit program memory words. A row is the minimum block size that can be erased by user software.

Flash program memory may only be written or erased if the destination address is in a segment of memory that is not write-protected, as defined in bits WRT<1:0> of Configuration Words.

After a row has been erased, the user can reprogram all or a portion of this row. Data to be written into the program memory row is written to 14-bit wide data write latches. These write latches are not directly accessible to the user, but may be loaded via sequential writes to the EEDATH:EEDATL register pair.

Note:	If the user wants to modify only a portion of a previously programmed row, then the contents of the entire row must be read and saved in RAM prior to the erase.

The number of data write latches may not be equivalent to the number of row locations. During programming, user software may need to fill the set of write latches and initiate a programming operation multiple times in order to fully reprogram an erased row. For example, a device with a row size of 32 words and eight write latches will need to load the write latches with data and initiate a programming operation four times.

The size of a program memory row and the number of program memory write latches may vary by device. See Table 12-1 for details.

12.3.1 READING THE FLASH PROGRAM MEMORY

To read a program memory location, the user must:

1. Write the Least and Most Significant address bits to the EEADRH:EEADRL register pair.
2. Clear the CFGS bit of the EECON1 register.
3. Set the EEPGD control bit of the EECON1 register.
4. Then, set control bit RD of the EECON1 register.

Once the read control bit is set, the program memory Flash controller will use the second instruction cycle to read the data. This causes the second instruction immediately following the "`BSF EECON1,RD`" instruction to be ignored. The data is available in the very next cycle, in the EEDATH:EEDATL register pair; therefore, it can be read as two bytes in the following instructions.

EEDATH:EEDATL register pair will hold this value until another read or until it is written to by the user.

Note 1:	The two instructions following a program memory read are required to be `NOP`s. This prevents the user from executing a two-cycle instruction on the next instruction after the RD bit is set.
2:	Flash program memory can be read regardless of the setting of the $\overline{CP}$ bit.

TABLE 12-1: FLASH MEMORY ORGANIZATION BY DEVICE

Device	Erase Block (Row) Size/Boundary	Number of Write Latches/Boundary
PIC16(L)F1784/6/7	32 words, EEADRL<4:0> = `00000`	32 words, EEADRL<4:0> = `00000`

EXAMPLE 12-3: FLASH PROGRAM MEMORY READ

```
* This code block will read 1 word of program
* memory at the memory address:
    PROG_ADDR_HI : PROG_ADDR_LO
*   data will be returned in the variables;
*   PROG_DATA_HI, PROG_DATA_LO

    BANKSEL  EEADRL           ; Select Bank for EEPROM registers
    MOVLW    PROG_ADDR_LO     ;
    MOVWF    EEADRL           ; Store LSB of address
    MOVLW    PROG_ADDR_HI     ;
    MOVWL    EEADRH           ; Store MSB of address

    BCF      EECON1,CFGS      ; Do not select Configuration Space
    BSF      EECON1,EEPGD     ; Select Program Memory
    BCF      INTCON,GIE       ; Disable interrupts
    BSF      EECON1,RD        ; Initiate read
    NOP                       ; Executed (Figure 12-1)
    NOP                       ; Ignored (Figure 12-1)
    BSF      INTCON,GIE       ; Restore interrupts

    MOVF     EEDATL,W         ; Get LSB of word
    MOVWF    PROG_DATA_LO     ; Store in user location
    MOVF     EEDATH,W         ; Get MSB of word
    MOVWF    PROG_DATA_HI     ; Store in user location
```


© 2012-2014 Microchip Technology Inc.

12.3.2 ERASING FLASH PROGRAM MEMORY

While executing code, program memory can only be erased by rows. To erase a row:

1. Load the EEADRH:EEADRL register pair with the address of new row to be erased.
2. Clear the CFGS bit of the EECON1 register.
3. Set the EEPGD, FREE, and WREN bits of the EECON1 register.
4. Write 55h, then AAh, to EECON2 (Flash programming unlock sequence).
5. Set control bit WR of the EECON1 register to begin the erase operation.
6. Poll the FREE bit in the EECON1 register to determine when the row erase has completed.

See Example 12-4.

After the "`BSF EECON1,WR`" instruction, the processor requires two cycles to set up the erase operation. The user must place two `NOP` instructions after the WR bit is set. The processor will halt internal operations for the typical 2 ms erase time. This is not Sleep mode as the clocks and peripherals will continue to run. After the erase cycle, the processor will resume operation with the third instruction after the EECON1 write instruction.

12.3.3 WRITING TO FLASH PROGRAM MEMORY

Program memory is programmed using the following steps:

1. Load the starting address of the word(s) to be programmed.
2. Load the write latches with data.
3. Initiate a programming operation.
4. Repeat steps 1 through 3 until all data is written.

Before writing to program memory, the word(s) to be written must be erased or previously unwritten. Program memory can only be erased one row at a time. No automatic erase occurs upon the initiation of the write.

Program memory can be written one or more words at a time. The maximum number of words written at one time is equal to the number of write latches. See Figure 12-2 (block writes to program memory with 32 write latches) for more details. The write latches are aligned to the address boundary defined by EEADRL as shown in Table 12-1. Write operations do not cross these boundaries. At the completion of a program memory write operation, the write latches are reset to contain 0x3FFF.

The following steps should be completed to load the write latches and program a block of program memory. These steps are divided into two parts. First, all write latches are loaded with data except for the last program memory location. Then, the last write latch is loaded and the programming sequence is initiated. A special unlock sequence is required to load a write latch with data or initiate a Flash programming operation. This unlock sequence should not be interrupted.

1. Set the EEPGD and WREN bits of the EECON1 register.
2. Clear the CFGS bit of the EECON1 register.
3. Set the LWLO bit of the EECON1 register. When the LWLO bit of the EECON1 register is '`1`', the write sequence will only load the write latches and will not initiate the write to Flash program memory.
4. Load the EEADRH:EEADRL register pair with the address of the location to be written.
5. Load the EEDATH:EEDATL register pair with the program memory data to be written.
6. Write 55h, then AAh, to EECON2, then set the WR bit of the EECON1 register (Flash programming unlock sequence). The write latch is now loaded.
7. Increment the EEADRH:EEADRL register pair to point to the next location.
8. Repeat steps 5 through 7 until all but the last write latch has been loaded.
9. Clear the LWLO bit of the EECON1 register. When the LWLO bit of the EECON1 register is '`0`', the write sequence will initiate the write to Flash program memory.
10. Load the EEDATH:EEDATL register pair with the program memory data to be written.
11. Write 55h, then AAh, to EECON2, then set the WR bit of the EECON1 register (Flash programming unlock sequence). The entire latch block is now written to Flash program memory.

It is not necessary to load the entire write latch block with user program data. However, the entire write latch block will be written to program memory.

An example of the complete write sequence for eight words is shown in Example 12-5. The initial address is loaded into the EEADRH:EEADRL register pair; the eight words of data are loaded using indirect addressing.

After the "`BSF EECON1,WR`" instruction, the processor requires two cycles to set up the write operation. The user must place two `NOP` instructions after the WR bit is set. The processor will halt internal operations for the typical 2 ms, only during the cycle in which the write takes place (i.e., the last word of the block write). This is not Sleep mode as the clocks and peripherals will continue to run. The processor does not stall when LWLO = `1`, loading the write latches. After the write cycle, the processor will resume operation with the third instruction after the EECON1 `WRITE` instruction.

FIGURE 12-2: BLOCK WRITES TO FLASH PROGRAM MEMORY WITH 32 WRITE LATCHES

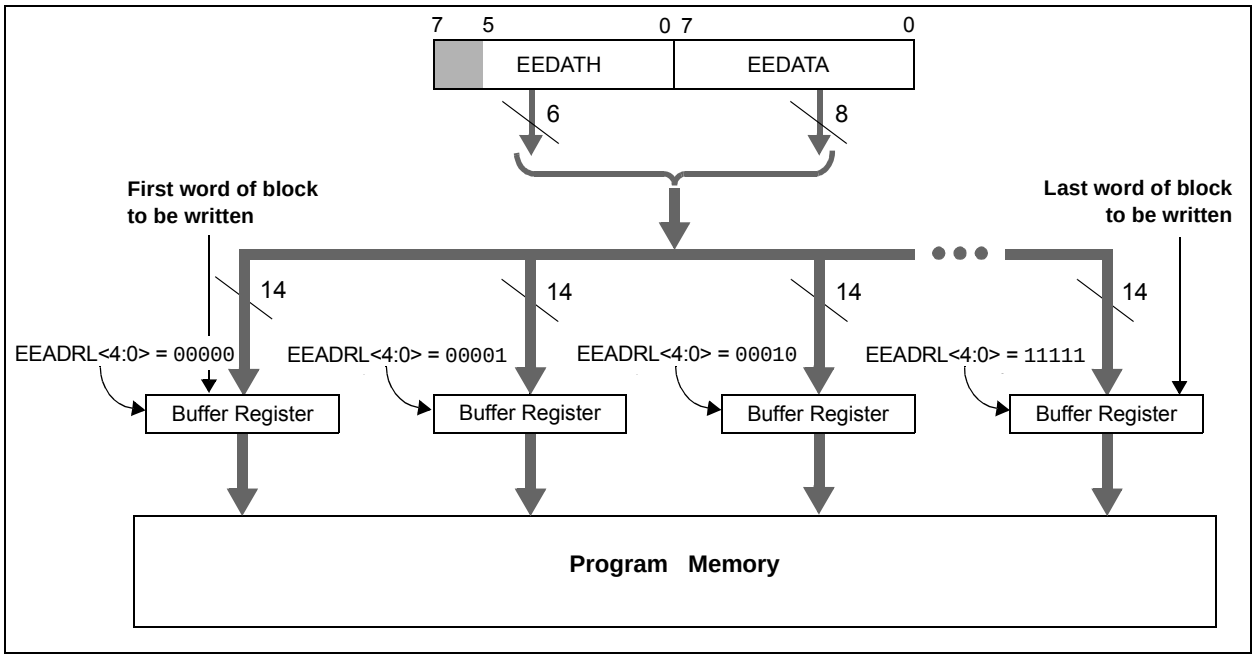

EXAMPLE 12-4: ERASING ONE ROW OF PROGRAM MEMORY

```
; This row erase routine assumes the following:
; 1. A valid address within the erase block is loaded in ADDRH:ADDRL
; 2. ADDRH and ADDRL are located in shared data memory 0x70 - 0x7F (common RAM)


        BCF         INTCON,GIE      ; Disable ints so required sequences will execute properly
        BANKSEL     EEADRL
        MOVF        ADDRL,W         ; Load lower 8 bits of erase address boundary
        MOVWF       EEADRL
        MOVF        ADDRH,W         ; Load upper 6 bits of erase address boundary
        MOVWF       EEADRH
        BSF         EECON1,EEPGD    ; Point to program memory
        BCF         EECON1,CFGS     ; Not configuration space
        BSF         EECON1,FREE     ; Specify an erase operation
        BSF         EECON1,WREN     ; Enable writes

Required
Sequence
        MOVLW       55h             ; Start of required sequence to initiate erase
        MOVWF       EECON2          ; Write 55h
        MOVLW       0AAh            ;
        MOVWF       EECON2          ; Write AAh
        BSF         EECON1,WR       ; Set WR bit to begin erase
        NOP                         ; Any instructions here are ignored as processor
                                    ; halts to begin erase sequence
        NOP                         ; Processor will stop here and wait for erase complete.

                                    ; after erase processor continues with 3rd instruction

        BCF         EECON1,WREN     ; Disable writes
        BSF         INTCON,GIE      ; Enable interrupts
```


© 2012-2014 Microchip Technology Inc.

EXAMPLE 12-5: WRITING TO FLASH PROGRAM MEMORY

```
; This write routine assumes the following:
; 1. The 16 bytes of data are loaded, starting at the address in DATA_ADDR
; 2. Each word of data to be written is made up of two adjacent bytes in DATA_ADDR,
;    stored in little endian format
; 3. A valid starting address (the least significant bits = 0000) is loaded in ADDRH:ADDRL
; 4. ADDRH and ADDRL are located in shared data memory 0x70 - 0x7F (common RAM)
;
        BCF         INTCON,GIE     ; Disable ints so required sequences will execute properly
        BANKSEL     EEADRH         ; Bank 3
        MOVF        ADDRH,W        ; Load initial address
        MOVWF       EEADRH         ;
        MOVF        ADDRL,W        ;
        MOVWF       EEADRL         ;
        MOVLW       LOW DATA_ADDR  ; Load initial data address
        MOVWF       FSR0L          ;
        MOVLW       HIGH DATA_ADDR ; Load initial data address
        MOVWF       FSR0H          ;
        BSF         EECON1,EEPGD   ; Point to program memory
        BCF         EECON1,CFGS    ; Not configuration space
        BSF         EECON1,WREN    ; Enable writes
        BSF         EECON1,LWLO    ; Only Load Write Latches
LOOP
        MOVIW       FSR0++         ; Load first data byte into lower
        MOVWF       EEDATL         ;
        MOVIW       FSR0++         ; Load second data byte into upper
        MOVWF       EEDATH         ;

        MOVF        EEADRL,W       ; Check if lower bits of address are '000'
        XORLW       0x0F           ; Check if we're on the last of 16 addresses
        ANDLW       0x0F           ;
        BTFSC       STATUS,Z       ; Exit if last of 16 words,
        GOTO        START_WRITE    ;

  Required
  Sequence
        MOVLW       55h            ; Start of required write sequence:
        MOVWF       EECON2         ; Write 55h
        MOVLW       0AAh           ;
        MOVWF       EECON2         ; Write AAh
        BSF         EECON1,WR      ; Set WR bit to begin write
        NOP                        ; Any instructions here are ignored as processor
                                   ; halts to begin write sequence
        NOP                        ; Processor will stop here and wait for write to complete.

                                   ; After write processor continues with 3rd instruction.

        INCF        EEADRL,F       ; Still loading latches Increment address
        GOTO        LOOP           ; Write next latches

START_WRITE
        BCF         EECON1,LWLO    ; No more loading latches - Actually start Flash program
                                   ; memory write

  Required
  Sequence
        MOVLW       55h            ; Start of required write sequence:
        MOVWF       EECON2         ; Write 55h
        MOVLW       0AAh           ;
        MOVWF       EECON2         ; Write AAh
        BSF         EECON1,WR      ; Set WR bit to begin write
        NOP                        ; Any instructions here are ignored as processor
                                   ; halts to begin write sequence
        NOP                        ; Processor will stop here and wait for write complete.

                                   ; after write processor continues with 3rd instruction
        BCF         EECON1,WREN    ; Disable writes
        BSF         INTCON,GIE     ; Enable interrupts
```

12.4 Modifying Flash Program Memory

When modifying existing data in a program memory row, and data within that row must be preserved, it must first be read and saved in a RAM image. Program memory is modified using the following steps:

1. Load the starting address of the row to be modified.
2. Read the existing data from the row into a RAM image.
3. Modify the RAM image to contain the new data to be written into program memory.
4. Load the starting address of the row to be rewritten.
5. Erase the program memory row.
6. Load the write latches with data from the RAM image.
7. Initiate a programming operation.
8. Repeat steps 6 and 7 as many times as required to reprogram the erased row.

12.5 User ID, Device ID and Configuration Word Access

Instead of accessing program memory or EEPROM data memory, the User ID's, Device ID/Revision ID and Configuration Words can be accessed when CFGS = 1 in the EECON1 register. This is the region that would be pointed to by PC<15> = 1, but not all addresses are accessible. Different access may exist for reads and writes. Refer to Table 12-2.

When read access is initiated on an address outside the parameters listed in Table 12-2, the EEDATH:EEDATL register pair is cleared.

TABLE 12-2: USER ID, DEVICE ID AND CONFIGURATION WORD ACCESS (CFGS = 1)

Address	Function	Read Access	Write Access
8000h-8003h	User IDs	Yes	Yes
8006h	Device ID/Revision ID	Yes	No
8007h-8008h	Configuration Words 1 and 2	Yes	No

EXAMPLE 12-6: CONFIGURATION WORD AND DEVICE ID ACCESS

```
* This code block will read 1 word of program memory at the memory address:
*   PROG_ADDR_LO (must be 00h-08h) data will be returned in the variables;
*   PROG_DATA_HI, PROG_DATA_LO

    BANKSEL  EEADRL          ; Select correct Bank
    MOVLW    PROG_ADDR_LO    ;
    MOVWF    EEADRL          ; Store LSB of address
    CLRF     EEADRH          ; Clear MSB of address

    BSF      EECON1,CFGS     ; Select Configuration Space
    BCF      INTCON,GIE      ; Disable interrupts
    BSF      EECON1,RD       ; Initiate read
    NOP                      ; Executed (See Figure 12-1)
    NOP                      ; Ignored (See Figure 12-1)
    BSF      INTCON,GIE      ; Restore interrupts

    MOVF     EEDATL,W        ; Get LSB of word
    MOVWF    PROG_DATA_LO    ; Store in user location
    MOVF     EEDATH,W        ; Get MSB of word
    MOVWF    PROG_DATA_HI    ; Store in user location
```


© 2012-2014 Microchip Technology Inc.

12.6 Write Verify

Depending on the application, good programming practice may dictate that the value written to the data EEPROM or program memory should be verified (see Example 12-7) to the desired value to be written. Example 12-7 shows how to verify a write to EEPROM.

EXAMPLE 12-7: EEPROM WRITE VERIFY

```
BANKSEL EEDATL      ;
MOVF    EEDATL, W   ;EEDATL not changed
                    ;from previous write
BSF     EECON1, RD  ;YES, Read the
                    ;value written
XORWF   EEDATL, W   ;
BTFSS   STATUS, Z   ;Is data the same
GOTO    WRITE_ERR   ;No, handle error
:                   ;Yes, continue
```

12.7 Register Definitions: EEPROM and Flash Control

REGISTER 12-1: EEDATL: EEPROM DATA LOW BYTE REGISTER

R/W-x/u	R/W-x/u	R/W-x/u	R/W-x/u	R/W-x/u	R/W-x/u	R/W-x/u	R/W-x/u
EEDAT<7:0>							
bit 7							bit 0

Legend:		
R = Readable bit	W = Writable bit	U = Unimplemented bit, read as ‘0’
u = Bit is unchanged	x = Bit is unknown	-n/n = Value at POR and BOR/Value at all other Resets
‘1’ = Bit is set	‘0’ = Bit is cleared	

bit 7-0 **EEDAT<7:0>**: Read/write value for EEPROM data byte or Least Significant bits of program memory

REGISTER 12-2: EEDATH: EEPROM DATA HIGH BYTE REGISTER

U-0	U-0	R/W-x/u	R/W-x/u	R/W-x/u	R/W-x/u	R/W-x/u	R/W-x/u
—	—	EEDAT<13:8>					
bit 7							bit 0

Legend:		
R = Readable bit	W = Writable bit	U = Unimplemented bit, read as ‘0’
u = Bit is unchanged	x = Bit is unknown	-n/n = Value at POR and BOR/Value at all other Resets
‘1’ = Bit is set	‘0’ = Bit is cleared	

bit 7-6 **Unimplemented:** Read as ‘0’

bit 5-0 **EEDAT<13:8>**: Read/write value for Most Significant bits of program memory

REGISTER 12-3: EEADRL: EEPROM ADDRESS REGISTER

R/W-0/0	R/W-0/0	R/W-0/0	R/W-0/0	R/W-0/0	R/W-0/0	R/W-0/0	R/W-0/0
EEADR<7:0>							
bit 7							bit 0

Legend:		
R = Readable bit	W = Writable bit	U = Unimplemented bit, read as ‘0’
u = Bit is unchanged	x = Bit is unknown	-n/n = Value at POR and BOR/Value at all other Resets
‘1’ = Bit is set	‘0’ = Bit is cleared	

bit 7-0 **EEADR<7:0>**: Specifies the Least Significant bits for program memory address or EEPROM address

REGISTER 12-4: EEADRH: EEPROM ADDRESS HIGH BYTE REGISTER

U-1	R/W-0/0	R/W-0/0	R/W-0/0	R/W-0/0	R/W-0/0	R/W-0/0	R/W-0/0
__(1)	EEADR<14:8>						
bit 7							bit 0

Legend:		
R = Readable bit	W = Writable bit	U = Unimplemented bit, read as ‘0’
u = Bit is unchanged	x = Bit is unknown	-n/n = Value at POR and BOR/Value at all other Resets
‘1’ = Bit is set	‘0’ = Bit is cleared	

bit 7 **Unimplemented:** Read as ‘1’

bit 6-0 **EEADR<14:8>**: Specifies the Most Significant bits for program memory address or EEPROM address

Note 1: Unimplemented, read as ‘1’.

© 2012-2014 Microchip Technology Inc.

REGISTER 12-5: EECON1: EEPROM CONTROL 1 REGISTER

R/W-0/0	R/W-0/0	R/W-0/0	R/W/HC-0/0	R/W-x/q	R/W-0/0	R/S/HC-0/0	R/S/HC-0/0
EEPGD	CFGS	LWLO	FREE	WRERR	WREN	WR	RD
bit 7							bit 0

Legend:		
R = Readable bit	W = Writable bit	U = Unimplemented bit, read as ‘0’
S = Bit can only be set	x = Bit is unknown	-n/n = Value at POR and BOR/Value at all other Resets
‘1’ = Bit is set	‘0’ = Bit is cleared	HC = Bit is cleared by hardware

bit 7 **EEPGD:** Flash Program/Data EEPROM Memory Select bit
1 = Accesses program space Flash memory
0 = Accesses data EEPROM memory

bit 6 **CFGS:** Flash Program/Data EEPROM or Configuration Select bit
1 = Accesses Configuration, User ID and Device ID registers
0 = Accesses Flash program or data EEPROM memory

bit 5 **LWLO:** Load Write Latches Only bit
If CFGS = 1 (Configuration space) **OR** CFGS = 0 and EEPGD = 1 (program Flash):
1 = The next WR command does not initiate a write; only the program memory latches are updated.
0 = The next WR command writes a value from EEDATH:EEDATL into program memory latches and initiates a write of all the data stored in the program memory latches.

If CFGS = 0 and EEPGD = 0: (Accessing data EEPROM)
LWLO is ignored. The next WR command initiates a write to the data EEPROM.

bit 4 **FREE:** Program Flash Erase Enable bit
If CFGS = 1 (Configuration space) **OR** CFGS = 0 and EEPGD = 1 (program Flash):
1 = Performs an erase operation on the next WR command (cleared by hardware after completion of erase).
0 = Performs a write operation on the next WR command.

If EEPGD = 0 and CFGS = 0: (Accessing data EEPROM)
FREE is ignored. The next WR command will initiate both a erase cycle and a write cycle.

bit 3 **WRERR:** EEPROM Error Flag bit
1 = Condition indicates an improper program or erase sequence attempt or termination (bit is set automatically on any set attempt (write ‘1’) of the WR bit).
0 = The program or erase operation completed normally.

bit 2 **WREN:** Program/Erase Enable bit
1 = Allows program/erase cycles
0 = Inhibits programming/erasing of program Flash and data EEPROM

bit 1 **WR:** Write Control bit
1 = Initiates a program Flash or data EEPROM program/erase operation.
The operation is self-timed and the bit is cleared by hardware once operation is complete.
The WR bit can only be set (not cleared) in software.
0 = Program/erase operation to the Flash or data EEPROM is complete and inactive.

bit 0 **RD:** Read Control bit
1 = Initiates an program Flash or data EEPROM read. Read takes one cycle. RD is cleared in hardware. The RD bit can only be set (not cleared) in software.
0 = Does not initiate a program Flash or data EEPROM data read.

REGISTER 12-6: EECON2: EEPROM CONTROL 2 REGISTER

W-0/0	W-0/0	W-0/0	W-0/0	W-0/0	W-0/0	W-0/0	W-0/0
EEPROM Control Register 2							
bit 7							bit 0

Legend:		
R = Readable bit	W = Writable bit	U = Unimplemented bit, read as ‘0’
S = Bit can only be set	x = Bit is unknown	-n/n = Value at POR and BOR/Value at all other Resets
‘1’ = Bit is set	‘0’ = Bit is cleared	

bit 7-0 **Data EEPROM Unlock Pattern bits**

To unlock writes, a 55h must be written first, followed by an AAh, before setting the WR bit of the EECON1 register. The value written to this register is used to unlock the writes. There are specific timing requirements on these writes. Refer to **Section 12.2.2 “Writing to the Data EEPROM Memory”** for more information.

TABLE 12-3: SUMMARY OF REGISTERS ASSOCIATED WITH DATA EEPROM

Name	Bit 7	Bit 6	Bit 5	Bit 4	Bit 3	Bit 2	Bit 1	Bit 0	Register on Page
EECON1	EEPGD	CFGS	LWLO	FREE	WRERR	WREN	WR	RD	123
EECON2	EEPROM Control Register 2 (not a physical register)								124*
EEADRL	EEADRL<7:0>								122
EEADRH	—(1)	EEADRH<6:0>							122
EEDATL	EEDATL<7:0>								122
EEDATH	—	—	EEDATH<5:0>						122
INTCON	GIE	PEIE	TMR0IE	INTE	IOCIE	TMR0IF	INTF	IOCIF	93
PIE2	OSFIE	C2IE	C1IE	EEIE	BCL1IE	C4IE	C3IE	CCP2IE	95
PIR2	OSFIF	C2IF	C1IF	EEIF	BCL1IF	C4IF	C3IF	CCP2IF	99

Legend: — = unimplemented location, read as ‘0’. Shaded cells are not used by data EEPROM module.
* Page provides register information.
2: Unimplemented, read as ‘1’.

© 2012-2014 Microchip Technology Inc.

13.0 I/O PORTS

Each port has three standard registers for its operation. These registers are:

- TRISx registers (data direction)
- PORTx registers (reads the levels on the pins of the device)
- LATx registers (output latch)

Some ports may have one or more of the following additional registers. These registers are:

- ANSELx (analog select)
- WPUx (weak pull-up)

In general, when a peripheral is enabled on a port pin, that pin cannot be used as a general purpose output. However, the pin can still be read.

TABLE 13-1: PORT AVAILABILITY PER DEVICE

Device	PORTA	PORTB	PORTC	PORTD	PORTE
PIC16(L)F1786	●	●	●		●
PIC16(L)F1784/7	●	●	●	●	●

The Data Latch (LATx registers) is useful for read-modify-write operations on the value that the I/O pins are driving.

A write operation to the LATx register has the same effect as a write to the corresponding PORTx register. A read of the LATx register reads of the values held in the I/O PORT latches, while a read of the PORTx register reads the actual I/O pin value.

Ports that support analog inputs have an associated ANSELx register. When an ANSEL bit is set, the digital input buffer associated with that bit is disabled. Disabling the input buffer prevents analog signal levels on the pin between a logic high and low from causing excessive current in the logic input circuitry. A simplified model of a generic I/O port, without the interfaces to other peripherals, is shown in Figure 13-1.

FIGURE 13-1: GENERIC I/O PORT OPERATION

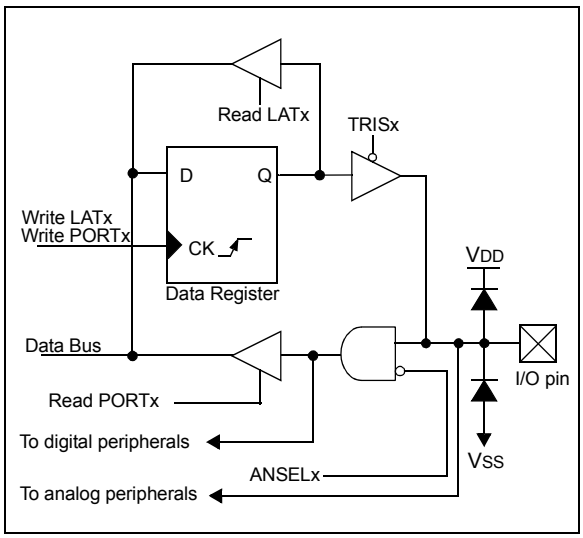

13.1 Alternate Pin Function

The Alternate Pin Function Control (APFCON1 and APFCON2) registers are used to steer specific peripheral input and output functions between different pins. The APFCON1 and APFCON2 registers are shown in Register 13-1 and Register 13-2. For this device family, the following functions can be moved between different pins.

- C2OUT output
- CCP1 output
- SDO output
- SCL/SCK output
- SDA/SDI output
- TX/RX output
- CCP2 output
- CCP3 output

These bits have no effect on the values of any TRIS register. PORT and TRIS overrides will be routed to the correct pin. The unselected pin will be unaffected.

© 2012-2014 Microchip Technology Inc.

13.2 Register Definitions: Alternate Pin Function Control

REGISTER 13-1: APFCON1: ALTERNATE PIN FUNCTION CONTROL 1 REGISTER

R/W-0/0	R/W-0/0	R/W-0/0	R/W-0/0	R/W-0/0	R/W-0/0	R/W-0/0	R/W-0/0
C2OUTSEL	CCP1SEL	SDOSEL	SCKSEL	SDISEL	TXSEL	RXSEL	CCP2SEL
bit 7							bit 0

Legend:		
R = Readable bit	W = Writable bit	U = Unimplemented bit, read as ‘0’
u = bit is unchanged	x = Bit is unknown	-n/n = Value at POR and BOR/Value at all other Resets
‘1’ = Bit is set	‘0’ = Bit is cleared	

bit 7 **C2OUTSEL**: C2OUT Pin Selection bit
1 = C2OUT is on pin RA6
0 = C2OUT is on pin RA5

bit 6 **CCP1SEL**: CCP1 Input/Output Pin Selection bit
1 = CCP1 is on pin RB0
0 = CCP1 is on pin RC2

bit 5 **SDOSEL**: MSSP SDO Pin Selection bit
1 = SDO is on pin RB5
0 = SDO is on pin RC5

bit 4 **SCKSEL**: MSSP Serial Clock (SCL/SCK) Pin Selection bit
1 = SCL/SCK is on pin RB7
0 = SCL/SCK is on pin RC3

bit 3 **SDISEL**: MSSP Serial Data (SDA/SDI) Output Pin Selection bit
1 = SDA/SDI is on pin RB6
0 = SDA/SDI is on pin RC4

bit 2 **TXSEL**: TX Pin Selection bit
1 = TX is on pin RB6
0 = TX is on pin RC6

bit 1 **RXSEL**: RX Pin Selection bit
1 = RX is on pin RB7
0 = RX is on pin RC7

bit 0 **CCP2SEL**: CCP2 Input/Output Pin Selection bit
1 = CCP2 is on pin RB3
0 = CCP2 is on pin RC1

REGISTER 13-2: APFCON2: ALTERNATE PIN FUNCTION CONTROL 2 REGISTER

U-0	U-0	U-0	U-0	U-0	U-0	U-0	R/W-0/0
—	—	—	—	—	—	—	CCP3SEL
bit 7							bit 0

Legend:		
R = Readable bit	W = Writable bit	U = Unimplemented bit, read as ‘0’
u = bit is unchanged	x = Bit is unknown	-n/n = Value at POR and BOR/Value at all other Resets
‘1’ = Bit is set	‘0’ = Bit is cleared	

bit 7-1 **Unimplemented:** Read as ‘0’

bit 0 **CCP3SEL**: CCP3 Input/Output Pin Selection bit
1 = CCP3 is on pin RB5
PIC16(L)F1786 devices:
0 = CCP3 is on pin RC6
PIC16(L)F1784/7 devices:
0 = CCP3 is on pin RE0

© 2012-2014 Microchip Technology Inc.

13.3 PORTA Registers

13.3.1 DATA REGISTER

PORTA is an 8-bit wide, bidirectional port. The corresponding data direction register is TRISA (Register 13-4). Setting a TRISA bit (= 1) will make the corresponding PORTA pin an input (i.e., disable the output driver). Clearing a TRISA bit (= 0) will make the corresponding PORTA pin an output (i.e., enables output driver and puts the contents of the output latch on the selected pin). Example 13-1 shows how to initialize PORTA.

Reading the PORTA register (Register 13-3) reads the status of the pins, whereas writing to it will write to the PORT latch. All write operations are read-modify-write operations. Therefore, a write to a port implies that the port pins are read, this value is modified and then written to the PORT data latch (LATA).

13.3.2 DIRECTION CONTROL

The TRISA register (Register 13-4) controls the PORTA pin output drivers, even when they are being used as analog inputs. The user should ensure the bits in the TRISA register are maintained set when using them as analog inputs. I/O pins configured as analog inputs always read '0'.

13.3.3 OPEN DRAIN CONTROL

The ODCONA register (Register 13-8) controls the open-drain feature of the port. Open drain operation is independently selected for each pin. When an ODCONA bit is set, the corresponding port output becomes an open drain driver capable of sinking current only. When an ODCONA bit is cleared, the corresponding port output pin is the standard push-pull drive capable of sourcing and sinking current.

13.3.4 SLEW RATE CONTROL

The SLRCONA register (Register 13-9) controls the slew rate option for each port pin. Slew rate control is independently selectable for each port pin. When an SLRCONA bit is set, the corresponding port pin drive is slew rate limited. When an SLRCONA bit is cleared, The corresponding port pin drive slews at the maximum rate possible.

13.3.5 INPUT THRESHOLD CONTROL

The INLVLA register (Register 13-10) controls the input voltage threshold for each of the available PORTA input pins. A selection between the Schmitt Trigger CMOS or the TTL Compatible thresholds is available. The input threshold is important in determining the value of a read of the PORTA register and also the level at which an interrupt-on-change occurs, if that feature is enabled. See **Section TABLE 30-1: "Supply Voltage"** for more information on threshold levels.

Note:	Changing the input threshold selection should be performed while all peripheral modules are disabled. Changing the threshold level during the time a module is active may inadvertently generate a transition associated with an input pin, regardless of the actual voltage level on that pin.

13.3.6 ANALOG CONTROL

The ANSELA register (Register 13-6) is used to configure the Input mode of an I/O pin to analog. Setting the appropriate ANSELA bit high will cause all digital reads on the pin to be read as '0' and allow analog functions on the pin to operate correctly.

The state of the ANSELA bits has no effect on digital output functions. A pin with TRIS clear and ANSEL set will still operate as a digital output, but the Input mode will be analog. This can cause unexpected behavior when executing read-modify-write instructions on the affected port.

Note:	The ANSELA bits default to the Analog mode after Reset. To use any pins as digital general purpose or peripheral inputs, the corresponding ANSEL bits must be initialized to '0' by user software.

EXAMPLE 13-1: INITIALIZING PORTA

```
; This code example illustrates
; initializing the PORTA register. The
; other ports are initialized in the same
; manner.

BANKSEL  PORTA        ;
CLRF     PORTA        ;Init PORTA
BANKSEL  LATA         ;Data Latch
CLRF     LATA         ;
BANKSEL  ANSELA       ;
CLRF     ANSELA       ;digital I/O
BANKSEL  TRISA        ;
MOVLW    B'00111000'  ;Set RA<5:3> as inputs
MOVWF    TRISA        ;and set RA<2:0> as
                      ;outputs
```

13.3.7 PORTA FUNCTIONS AND OUTPUT PRIORITIES

Each PORTA pin is multiplexed with other functions. The pins, their combined functions and their output priorities are shown in Table 13-2.

When multiple outputs are enabled, the actual pin control goes to the peripheral with the highest priority.

Analog input functions, such as ADC, and comparator inputs, are not shown in the priority lists. These inputs are active when the I/O pin is set for Analog mode using the ANSELx registers. Digital output functions may control the pin when it is in Analog mode with the priority shown in the priority list.

TABLE 13-2: PORTA OUTPUT PRIORITY

Pin Name	Function Priority(1)
RA0	RA0
RA1	OPA1OUT RA1
RA2	DAC1OUT1 RA2
RA3	RA3
RA4	C1OUT RA4
RA5	C2OUT RA5
RA6	CLKOUT C2OUT RA6
RA7	RA7

Note 1: Priority listed from highest to lowest.

© 2012-2014 Microchip Technology Inc.

13.4 Register Definitions: PORTA

REGISTER 13-3: PORTA: PORTA REGISTER

R/W-x/x	R/W-x/x	R/W-x/x	R/W-x/x	R/W-x/x	R/W-x/x	R/W-x/x	R/W-x/x
RA7	RA6	RA5	RA4	RA3	RA2	RA1	RA0
bit 7							bit 0

Legend:		
R = Readable bit	W = Writable bit	U = Unimplemented bit, read as ‘0’
u = Bit is unchanged	x = Bit is unknown	-n/n = Value at POR and BOR/Value at all other Resets
‘1’ = Bit is set	‘0’ = Bit is cleared	

bit 7-0 **RA<7:0>**: PORTA I/O Value bits(1)
`1` = Port pin is $\geq V_{IH}$
`0` = Port pin is $\leq V_{IL}$

Note 1: Writes to PORTA are actually written to corresponding LATA register. Reads from PORTA register is return of actual I/O pin values.

REGISTER 13-4: TRISA: PORTA TRI-STATE REGISTER

R/W-1/1	R/W-1/1	R/W-1/1	R/W-1/1	R/W-1/1	R/W-1/1	R/W-1/1	R/W-1/1
TRISA7	TRISA6	TRISA5	TRISA4	TRISA3	TRISA2	TRISA1	TRISA0
bit 7							bit 0

Legend:		
R = Readable bit	W = Writable bit	U = Unimplemented bit, read as ‘0’
u = Bit is unchanged	x = Bit is unknown	-n/n = Value at POR and BOR/Value at all other Resets
‘1’ = Bit is set	‘0’ = Bit is cleared	

bit 7-0 **TRISA<7:0>:** PORTA Tri-State Control bits
`1` = PORTA pin configured as an input (tri-stated)
`0` = PORTA pin configured as an output

REGISTER 13-5: LATA: PORTA DATA LATCH REGISTER

R/W-x/u	R/W-x/u	R/W-x/u	R/W-x/u	R/W-x/u	R/W-x/u	R/W-x/u	R/W-x/u
LATA7	LATA6	LATA5	LATA4	LATA3	LATA2	LATA1	LATA0
bit 7							bit 0

Legend:		
R = Readable bit	W = Writable bit	U = Unimplemented bit, read as ‘0’
u = Bit is unchanged	x = Bit is unknown	-n/n = Value at POR and BOR/Value at all other Resets
‘1’ = Bit is set	‘0’ = Bit is cleared	

bit 7-4 **LATA<7:0>**: PORTA Output Latch Value bits(1)

Note 1: Writes to PORTA are actually written to corresponding LATA register. Reads from PORTA register is return of actual I/O pin values.

REGISTER 13-6: ANSELA: PORTA ANALOG SELECT REGISTER

R/W-1/1	U-0	R/W-1/1	R/W-1/1	R/W-1/1	R/W-1/1	R/W-1/1	R/W-1/1
ANSA7	—	ANSA5	ANSA4	ANSA3	ANSA2	ANSA1	ANSA0
bit 7							bit 0

Legend:		
R = Readable bit	W = Writable bit	U = Unimplemented bit, read as ‘0’
u = Bit is unchanged	x = Bit is unknown	-n/n = Value at POR and BOR/Value at all other Resets
‘1’ = Bit is set	‘0’ = Bit is cleared	

bit 5 **ANSA7**: Analog Select between Analog or Digital Function on pins RA7, respectively
`0` = Digital I/O. Pin is assigned to port or digital special function.
`1` = Analog input. Pin is assigned as analog input(1). Digital input buffer disabled.

bit 6 **Unimplemented:** Read as ‘`0`’

bit 5-0 **ANSA<5:0>**: Analog Select between Analog or Digital Function on pins RA<5:0>, respectively
`0` = Digital I/O. Pin is assigned to port or digital special function.
`1` = Analog input. Pin is assigned as analog input(1). Digital input buffer disabled.

Note 1: When setting a pin to an analog input, the corresponding TRIS bit must be set to Input mode in order to allow external control of the voltage on the pin.

REGISTER 13-7: WPUA: WEAK PULL-UP PORTA REGISTER

R/W-1/1	R/W-1/1	R/W-1/1	R/W-1/1	R/W-1/1	R/W-1/1	R/W-1/1	R/W-1/1
WPUA7	WPUA6	WPUA5	WPUA4	WPUA3	WPUA2	WPUA1	WPUA0
bit 7							bit 0

Legend:		
R = Readable bit	W = Writable bit	U = Unimplemented bit, read as ‘0’
u = Bit is unchanged	x = Bit is unknown	-n/n = Value at POR and BOR/Value at all other Resets
‘1’ = Bit is set	‘0’ = Bit is cleared	

bit 7-0 **WPUA<7:0>**: Weak Pull-up Register bits
`1` = Pull-up enabled
`0` = Pull-up disabled

Note 1: Global $\overline{\text{WPUEN}}$ bit of the OPTION_REG register must be cleared for individual pull-ups to be enabled.
2: The weak pull-up device is automatically disabled if the pin is in configured as an output.

© 2012-2014 Microchip Technology Inc.

REGISTER 13-8: ODCONA: PORTA OPEN DRAIN CONTROL REGISTER

R/W-0/0	R/W-0/0	R/W-0/0	R/W-0/0	R/W-0/0	R/W-0/0	R/W-0/0	R/W-0/0
ODA7	ODA6	ODA5	ODA4	ODA3	ODA2	ODA1	ODA0
bit 7							bit 0

Legend:		
R = Readable bit	W = Writable bit	U = Unimplemented bit, read as ‘0’
u = Bit is unchanged	x = Bit is unknown	-n/n = Value at POR and BOR/Value at all other Resets
‘1’ = Bit is set	‘0’ = Bit is cleared	

bit 7-0 **ODA<7:0>:** PORTA Open Drain Enable bits
For RA<7:0> pins, respectively
`1` = Port pin operates as open-drain drive (sink current only)
`0` = Port pin operates as standard push-pull drive (source and sink current)

REGISTER 13-9: SLRCONA: PORTA SLEW RATE CONTROL REGISTER

R/W-1/1	R/W-1/1	R/W-1/1	R/W-1/1	R/W-1/1	R/W-1/1	R/W-1/1	R/W-1/1
SLRA7	SLRA6	SLRA5	SLRA4	SLRA3	SLRA2	SLRA1	SLRA0
bit 7							bit 0

Legend:		
R = Readable bit	W = Writable bit	U = Unimplemented bit, read as ‘0’
u = Bit is unchanged	x = Bit is unknown	-n/n = Value at POR and BOR/Value at all other Resets
‘1’ = Bit is set	‘0’ = Bit is cleared	

bit 7-0 **SLRA<7:0>:** PORTA Slew Rate Enable bits
For RA<7:0> pins, respectively
`1` = Port pin slew rate is limited
`0` = Port pin slews at maximum rate

REGISTER 13-10: INLVLA: PORTA INPUT LEVEL CONTROL REGISTER

R/W-0/0	R/W-0/0	R/W-0/0	R/W-0/0	R/W-0/0	R/W-0/0	R/W-0/0	R/W-0/0
INLVLA7	INLVLA6	INLVLA5	INLVLA4	INLVLA3	INLVLA2	INLVLA1	INLVLA0
bit 7							bit 0

Legend:		
R = Readable bit	W = Writable bit	U = Unimplemented bit, read as ‘0’
u = Bit is unchanged	x = Bit is unknown	-n/n = Value at POR and BOR/Value at all other Resets
‘1’ = Bit is set	‘0’ = Bit is cleared	

bit 7-0 **INLVLA<7:0>:** PORTA Input Level Select bits
For RA<7:0> pins, respectively
`1` = ST input used for PORT reads and interrupt-on-change
`0` = TTL input used for PORT reads and interrupt-on-change

TABLE 13-3: SUMMARY OF REGISTERS ASSOCIATED WITH PORTA

Name	Bit 7	Bit 6	Bit 5	Bit 4	Bit 3	Bit 2	Bit 1	Bit 0	Register on Page
ANSELA	ANSA7	—	ANSA5	ANSA4	ANSA3	ANSA2	ANSA1	ANSA0	132
INLVLA	INLVLA7	INLVLA6	INLVLA5	INLVLA4	INLVLA3	INLVLA2	INLVLA1	INLVLA0	133
LATA	LATA7	LATA6	LATA5	LATA4	LATA3	LATA2	LATA1	LATA0	131
ODCONA	ODA7	ODA6	ODA5	ODA4	ODA3	ODA2	ODA1	ODA0	133
OPTION_REG	$\overline{\text{WPUEN}}$	INTEDG	TMR0CS	TMR0SE	PSA	PS<2:0>			198
PORTA	RA7	RA6	RA5	RA4	RA3	RA2	RA1	RA0	131
SLRCONA	SLRA7	SLRA6	SLRA5	SLRA4	SLRA3	SLRA2	SLRA1	SLRA0	133
TRISA	TRISA7	TRISA6	TRISA5	TRISA4	TRISA3	TRISA2	TRISA1	TRISA0	131
WPUA	WPUA7	WPUA6	WPUA5	WPUA4	WPUA3	WPUA2	WPUA1	WPUA0	132

Legend: x = unknown, u = unchanged, – = unimplemented locations read as '0'. Shaded cells are not used by PORTA.

TABLE 13-4: SUMMARY OF CONFIGURATION WORD WITH PORTA

Name	Bits	Bit -/7	Bit -/6	Bit 13/5	Bit 12/4	Bit 11/3	Bit 10/2	Bit 9/1	Bit 8/0	Register on Page
CONFIG1	13:8	—	—	FCMEN	IESO	$\overline{\text{CLKOUTEN}}$	BOREN<1:0>		$\overline{\text{CPD}}$	54
	7:0	$\overline{\text{CP}}$	MCLRE	$\overline{\text{PWRTE}}$	WDTE<1:0>		FOSC<2:0>			

Legend: — = unimplemented location, read as '0'. Shaded cells are not used by PORTA.

© 2012-2014 Microchip Technology Inc.

13.5 PORTB Registers

13.5.1 DATA REGISTER

PORTB is an 8-bit wide, bidirectional port. The corresponding data direction register is TRISB (Register 13-12). Setting a TRISB bit (= 1) will make the corresponding PORTB pin an input (i.e., put the corresponding output driver in a High-Impedance mode). Clearing a TRISB bit (= 0) will make the corresponding PORTB pin an output (i.e., enable the output driver and put the contents of the output latch on the selected pin). Example 13-1 shows how to initialize an I/O port.

Reading the PORTB register (Register 13-11) reads the status of the pins, whereas writing to it will write to the PORT latch. All write operations are read-modify-write operations. Therefore, a write to a port implies that the port pins are read, this value is modified and then written to the PORT data latch (LATB).

13.5.2 DIRECTION CONTROL

The TRISB register (Register 13-12) controls the PORTB pin output drivers, even when they are being used as analog inputs. The user should ensure the bits in the TRISB register are maintained set when using them as analog inputs. I/O pins configured as analog inputs always read '0'.

13.5.3 OPEN DRAIN CONTROL

The ODCONB register (Register 13-16) controls the open-drain feature of the port. Open drain operation is independently selected for each pin. When an ODCONB bit is set, the corresponding port output becomes an open drain driver capable of sinking current only. When an ODCONB bit is cleared, the corresponding port output pin is the standard push-pull drive capable of sourcing and sinking current.

13.5.4 SLEW RATE CONTROL

The SLRCONB register (Register 13-17) controls the slew rate option for each port pin. Slew rate control is independently selectable for each port pin. When an SLRCONB bit is set, the corresponding port pin drive is slew rate limited. When an SLRCONB bit is cleared, The corresponding port pin drive slews at the maximum rate possible.

13.5.5 INPUT THRESHOLD CONTROL

The INLVLB register (Register 13-18) controls the input voltage threshold for each of the available PORTB input pins. A selection between the Schmitt Trigger CMOS or the TTL Compatible thresholds is available. The input threshold is important in determining the value of a read of the PORTB register and also the level at which an interrupt-on-change occurs, if that feature is enabled. See **Section TABLE 30-1: "Supply Voltage"** for more information on threshold levels.

Note:	Changing the input threshold selection should be performed while all peripheral modules are disabled. Changing the threshold level during the time a module is active may inadvertently generate a transition associated with an input pin, regardless of the actual voltage level on that pin.

13.5.6 ANALOG CONTROL

The ANSELB register (Register 13-14) is used to configure the Input mode of an I/O pin to analog. Setting the appropriate ANSELB bit high will cause all digital reads on the pin to be read as '0' and allow analog functions on the pin to operate correctly.

The state of the ANSELB bits has no effect on digital output functions. A pin with TRIS clear and ANSELB set will still operate as a digital output, but the Input mode will be analog. This can cause unexpected behavior when executing read-modify-write instructions on the affected port.

Note:	The ANSELB bits default to the Analog mode after Reset. To use any pins as digital general purpose or peripheral inputs, the corresponding ANSEL bits must be initialized to '0' by user software.

13.5.7 PORTB FUNCTIONS AND OUTPUT PRIORITIES

Each PORTB pin is multiplexed with other functions. The pins, their combined functions and their output priorities are shown in Table 13-5.

When multiple outputs are enabled, the actual pin control goes to the peripheral with the highest priority.

Analog input and some digital input functions are not included in the list below. These input functions can remain active when the pin is configured as an output. Certain digital input functions override other port functions and are included in the priority list.

TABLE 13-5: PORTB OUTPUT PRIORITY

Pin Name	Function Priority(1)
RB0	CCP1 RB0
RB1	OPA2OUT RB1
RB2	CLKR RB2
RB3	CCP2 RB3
RB4	RB4
RB5	SDO C3OUT CCP3 RB5
RB6	ICSPCLK SDA TX/CK RB6
RB7	ICSPDAT DAC1OUT2 SCL/SCK DT RB7

Note 1: Priority listed from highest to lowest.

© 2012-2014 Microchip Technology Inc.

13.6 Register Definitions: PORTB

REGISTER 13-11: PORTB: PORTB REGISTER

R/W-x/u	R/W-x/u	R/W-x/u	R/W-x/u	R/W-x/u	R/W-x/u	R/W-x/u	R/W-x/u
RB7	RB6	RB5	RB4	RB3	RB2	RB1	RB0
bit 7							bit 0

Legend:		
R = Readable bit	W = Writable bit	U = Unimplemented bit, read as ‘0’
u = Bit is unchanged	x = Bit is unknown	-n/n = Value at POR and BOR/Value at all other Resets
‘1’ = Bit is set	‘0’ = Bit is cleared	

bit 7-0 **RB<7:0>**: PORTB General Purpose I/O Pin bits(1)
`1` = Port pin is ≥ V_{IH}
`0` = Port pin is ≤ V_{IL}

Note 1: Writes to PORTB are actually written to corresponding LATB register. Reads from PORTB register is return of actual I/O pin values.

REGISTER 13-12: TRISB: PORTB TRI-STATE REGISTER

R/W-1/1	R/W-1/1	R/W-1/1	R/W-1/1	R/W-1/1	R/W-1/1	R/W-1/1	R/W-1/1
TRISB7	TRISB6	TRISB5	TRISB4	TRISB3	TRISB2	TRISB1	TRISB0
bit 7							bit 0

Legend:		
R = Readable bit	W = Writable bit	U = Unimplemented bit, read as ‘0’
u = Bit is unchanged	x = Bit is unknown	-n/n = Value at POR and BOR/Value at all other Resets
‘1’ = Bit is set	‘0’ = Bit is cleared	

bit 7-0 **TRISB<7:0>:** PORTB Tri-State Control bits
`1` = PORTB pin configured as an input (tri-stated)
`0` = PORTB pin configured as an output

REGISTER 13-13: LATB: PORTB DATA LATCH REGISTER

R/W-x/u	R/W-x/u	R/W-x/u	R/W-x/u	R/W-x/u	R/W-x/u	R/W-x/u	R/W-x/u
LATB7	LATB6	LATB5	LATB4	LATB3	LATB2	LATB1	LATB0
bit 7							bit 0

Legend:		
R = Readable bit	W = Writable bit	U = Unimplemented bit, read as ‘0’
u = Bit is unchanged	x = Bit is unknown	-n/n = Value at POR and BOR/Value at all other Resets
‘1’ = Bit is set	‘0’ = Bit is cleared	

bit 7-0 **LATB<7:0>**: PORTB Output Latch Value bits(1)

Note 1: Writes to PORTB are actually written to corresponding LATB register. Reads from PORTB register is return of actual I/O pin values.

REGISTER 13-14: ANSELB: PORTB ANALOG SELECT REGISTER

U-0	R/W-1/1	R/W-1/1	R/W-1/1	R/W-1/1	R/W-1/1	R/W-1/1	R/W-1/1
—	ANSB6	ANSB5	ANSB4	ANSB3	ANSB2	ANSB1	ANSB0
bit 7							bit 0

Legend:		
R = Readable bit	W = Writable bit	U = Unimplemented bit, read as ‘0’
u = Bit is unchanged	x = Bit is unknown	-n/n = Value at POR and BOR/Value at all other Resets
‘1’ = Bit is set	‘0’ = Bit is cleared	

bit 7 **Unimplemented:** Read as ‘0’

bit 6-0 **ANSB<6:0>**: Analog Select between Analog or Digital Function on pins RB<6:0>, respectively
0 = Digital I/O. Pin is assigned to port or digital special function.
1 = Analog input. Pin is assigned as analog input(1). Digital input buffer disabled.

Note 1: When setting a pin to an analog input, the corresponding TRIS bit must be set to Input mode in order to allow external control of the voltage on the pin.

REGISTER 13-15: WPUB: WEAK PULL-UP PORTB REGISTER

R/W-1/1	R/W-1/1	R/W-1/1	R/W-1/1	R/W-1/1	R/W-1/1	R/W-1/1	R/W-1/1
WPUB7	WPUB6	WPUB5	WPUB4	WPUB3	WPUB2	WPUB1	WPUB0
bit 7							bit 0

Legend:		
R = Readable bit	W = Writable bit	U = Unimplemented bit, read as ‘0’
u = Bit is unchanged	x = Bit is unknown	-n/n = Value at POR and BOR/Value at all other Resets
‘1’ = Bit is set	‘0’ = Bit is cleared	

bit 7-0 **WPUB<7:0>**: Weak Pull-up Register bits
1 = Pull-up enabled
0 = Pull-up disabled

Note 1: Global $\overline{\text{WPUEN}}$ bit of the OPTION_REG register must be cleared for individual pull-ups to be enabled.
2: The weak pull-up device is automatically disabled if the pin is in configured as an output.

© 2012-2014 Microchip Technology Inc.

REGISTER 13-16: ODCONB: PORTB OPEN DRAIN CONTROL REGISTER

R/W-0/0	R/W-0/0	R/W-0/0	R/W-0/0	R/W-0/0	R/W-0/0	R/W-0/0	R/W-0/0
ODB7	ODB6	ODB5	ODB4	ODB3	ODB2	ODB1	ODB0
bit 7							bit 0

Legend:		
R = Readable bit	W = Writable bit	U = Unimplemented bit, read as ‘0’
u = Bit is unchanged	x = Bit is unknown	-n/n = Value at POR and BOR/Value at all other Resets
‘1’ = Bit is set	‘0’ = Bit is cleared	

bit 7-0 **ODB<7:0>:** PORTB Open Drain Enable bits
For RB<7:0> pins, respectively
1 = Port pin operates as open-drain drive (sink current only)
0 = Port pin operates as standard push-pull drive (source and sink current)

REGISTER 13-17: SLRCONB: PORTB SLEW RATE CONTROL REGISTER

R/W-1/1	R/W-1/1	R/W-1/1	R/W-1/1	R/W-1/1	R/W-1/1	R/W-1/1	R/W-1/1
SLRB7	SLRB6	SLRB5	SLRB4	SLRB3	SLRB2	SLRB1	SLRB0
bit 7							bit 0

Legend:		
R = Readable bit	W = Writable bit	U = Unimplemented bit, read as ‘0’
u = Bit is unchanged	x = Bit is unknown	-n/n = Value at POR and BOR/Value at all other Resets
‘1’ = Bit is set	‘0’ = Bit is cleared	

bit 7-0 **SLRB<7:0>:** PORTB Slew Rate Enable bits
For RB<7:0> pins, respectively
1 = Port pin slew rate is limited
0 = Port pin slews at maximum rate

REGISTER 13-18: INLVLB: PORTB INPUT LEVEL CONTROL REGISTER

R/W-0/0	R/W-0/0	R/W-0/0	R/W-0/0	R/W-0/0	R/W-0/0	R/W-0/0	R/W-0/0
INLVLB7	INLVLB6	INLVLB5	INLVLB4	INLVLB3	INLVLB2	INLVLB1	INLVLB0
bit 7							bit 0

Legend:		
R = Readable bit	W = Writable bit	U = Unimplemented bit, read as ‘0’
u = Bit is unchanged	x = Bit is unknown	-n/n = Value at POR and BOR/Value at all other Resets
‘1’ = Bit is set	‘0’ = Bit is cleared	

bit 7-0 **INLVLB<7:0>:** PORTB Input Level Select bits
For RB<7:0> pins, respectively
1 = ST input used for PORT reads and interrupt-on-change
0 = TTL input used for PORT reads and interrupt-on-change

TABLE 13-6: SUMMARY OF REGISTERS ASSOCIATED WITH PORTB

Name	Bit 7	Bit 6	Bit 5	Bit 4	Bit 3	Bit 2	Bit 1	Bit 0	Register on Page
ANSELB	—	ANSB6	ANSB5	ANSB4	ANSB3	ANSB2	ANSB1	ANSB0	138
INLVLB	INLVLB7	INLVLB6	INLVLB5	INLVLB4	INLVLB3	INLVLB2	INLVLB1	INLVLB0	139
LATB	LATB7	LATB6	LATB5	LATB4	LATB3	LATB2	LATB1	LATB0	137
ODCONB	ODB7	ODB6	ODB5	ODB4	ODB3	ODB2	ODB1	ODB0	139
PORTB	RB7	RB6	RB5	RB4	RB3	RB2	RB1	RB0	137
SLRCONB	SLRB7	SLRB6	SLRB5	SLRB4	SLRB3	SLRB2	SLRB1	SLRB0	139
TRISB	TRISB7	TRISB6	TRISB5	TRISB4	TRISB3	TRISB2	TRISB1	TRISB0	137
WPUB	WPUB7	WPUB6	WPUB5	WPUB4	WPUB3	WPUB2	WPUB1	WPUB0	138

Legend: x = unknown, u = unchanged, - = unimplemented locations read as ‘0’. Shaded cells are not used by PORTB.

© 2012-2014 Microchip Technology Inc.

13.7 PORTC Registers

13.7.1 DATA REGISTER

PORTC is an 8-bit wide bidirectional port. The corresponding data direction register is TRISC (Register 13-20). Setting a TRISC bit (= 1) will make the corresponding PORTC pin an input (i.e., put the corresponding output driver in a High-Impedance mode). Clearing a TRISC bit (= 0) will make the corresponding PORTC pin an output (i.e., enable the output driver and put the contents of the output latch on the selected pin). Example 13-1 shows how to initialize an I/O port.

Reading the PORTC register (Register 13-19) reads the status of the pins, whereas writing to it will write to the PORT latch. All write operations are read-modify-write operations. Therefore, a write to a port implies that the port pins are read, this value is modified and then written to the PORT data latch (LATC).

13.7.2 DIRECTION CONTROL

The TRISC register (Register 13-20) controls the PORTC pin output drivers, even when they are being used as analog inputs. The user should ensure the bits in the TRISC register are maintained set when using them as analog inputs. I/O pins configured as analog inputs always read '0'.

13.7.3 OPEN DRAIN CONTROL

The ODCONC register (Register 13-23) controls the open-drain feature of the port. Open drain operation is independently selected for each pin. When an ODCONC bit is set, the corresponding port output becomes an open drain driver capable of sinking current only. When an ODCONC bit is cleared, the corresponding port output pin is the standard push-pull drive capable of sourcing and sinking current.

13.7.4 SLEW RATE CONTROL

The SLRCONC register (Register 13-24) controls the slew rate option for each port pin. Slew rate control is independently selectable for each port pin. When an SLRCONC bit is set, the corresponding port pin drive is slew rate limited. When an SLRCONC bit is cleared, The corresponding port pin drive slews at the maximum rate possible.

13.7.5 INPUT THRESHOLD CONTROL

The INLVLC register (Register 13-25) controls the input voltage threshold for each of the available PORTC input pins. A selection between the Schmitt Trigger CMOS or the TTL Compatible thresholds is available. The input threshold is important in determining the value of a read of the PORTC register and also the level at which an interrupt-on-change occurs, if that feature is enabled. See **Section TABLE 30-1: "Supply Voltage"** for more information on threshold levels.

Note:	Changing the input threshold selection should be performed while all peripheral modules are disabled. Changing the threshold level during the time a module is active may inadvertently generate a transition associated with an input pin, regardless of the actual voltage level on that pin.

13.7.6 PORTC FUNCTIONS AND OUTPUT PRIORITIES

Each PORTC pin is multiplexed with other functions. The pins, their combined functions and their output priorities are shown in Table 13-7.

When multiple outputs are enabled, the actual pin control goes to the peripheral with the highest priority.

Analog input and some digital input functions are not included in the list below. These input functions can remain active when the pin is configured as an output. Certain digital input functions override other port functions and are included in the priority list.

TABLE 13-7: PORTC OUTPUT PRIORITY

Pin Name	Function Priority(1)
RC0	T1OSO PSMC1A RC0
RC1	PSMC1B CCP2 RC1
RC2	PSMC1C CCP1 RC2
RC3	PSMC1D SCL SCK RC3
RC4	PSMC1E SDA RC4
RC5	PSMC1F SDO RC5
RC6	PSMC2A TX/CK CCP3 RC6
RC7	PSMC2B DT RC7

Note 1: Priority listed from highest to lowest.

13.8 Register Definitions: PORTC

REGISTER 13-19: PORTC: PORTC REGISTER

R/W-x/u	R/W-x/u	R/W-x/u	R/W-x/u	R/W-x/u	R/W-x/u	R/W-x/u	R/W-x/u
RC7	RC6	RC5	RC4	RC3	RC2	RC1	RC0
bit 7							bit 0

Legend:		
R = Readable bit	W = Writable bit	U = Unimplemented bit, read as ‘0’
u = Bit is unchanged	x = Bit is unknown	-n/n = Value at POR and BOR/Value at all other Resets
‘1’ = Bit is set	‘0’ = Bit is cleared	

bit 7-0 **RC<7:0>**: PORTC General Purpose I/O Pin bits(1)
1 = Port pin is ≥ V_{IH}
0 = Port pin is ≤ V_{IL}

Note 1: Writes to PORTC are actually written to corresponding LATC register. Reads from PORTC register is return of actual I/O pin values.

REGISTER 13-20: TRISC: PORTC TRI-STATE REGISTER

R/W-1/1	R/W-1/1	R/W-1/1	R/W-1/1	R/W-1/1	R/W-1/1	R/W-1/1	R/W-1/1
TRISC7	TRISC6	TRISC5	TRISC4	TRISC3	TRISC2	TRISC1	TRISC0
bit 7							bit 0

Legend:		
R = Readable bit	W = Writable bit	U = Unimplemented bit, read as ‘0’
u = Bit is unchanged	x = Bit is unknown	-n/n = Value at POR and BOR/Value at all other Resets
‘1’ = Bit is set	‘0’ = Bit is cleared	

bit 7-0 **TRISC<7:0>:** PORTC Tri-State Control bits
1 = PORTC pin configured as an input (tri-stated)
0 = PORTC pin configured as an output

REGISTER 13-21: LATC: PORTC DATA LATCH REGISTER

R/W-x/u	R/W-x/u	R/W-x/u	R/W-x/u	R/W-x/u	R/W-x/u	R/W-x/u	R/W-x/u
LATC7	LATC6	LATC5	LATC4	LATC3	LATC2	LATC1	LATC0
bit 7							bit 0

Legend:		
R = Readable bit	W = Writable bit	U = Unimplemented bit, read as ‘0’
u = Bit is unchanged	x = Bit is unknown	-n/n = Value at POR and BOR/Value at all other Resets
‘1’ = Bit is set	‘0’ = Bit is cleared	

bit 7-0 **LATC<7:0>**: PORTC Output Latch Value bits(1)

Note 1: Writes to PORTC are actually written to corresponding LATC register. Reads from PORTC register is return of actual I/O pin values.

© 2012-2014 Microchip Technology Inc.

REGISTER 13-22: WPUC: WEAK PULL-UP PORTC REGISTER

R/W-1/1	R/W-1/1	R/W-1/1	R/W-1/1	R/W-1/1	R/W-1/1	R/W-1/1	R/W-1/1
WPUC7	WPUC6	WPUC5	WPUC4	WPUC3	WPUC2	WPUC1	WPUC0
bit 7							bit 0

Legend:		
R = Readable bit	W = Writable bit	U = Unimplemented bit, read as ‘0’
u = Bit is unchanged	x = Bit is unknown	-n/n = Value at POR and BOR/Value at all other Resets
‘1’ = Bit is set	‘0’ = Bit is cleared	

bit 7-0 **WPUC<7:0>**: Weak Pull-up Register bits
`1` = Pull-up enabled
`0` = Pull-up disabled

Note 1: Global $\overline{\text{WPUEN}}$ bit of the OPTION_REG register must be cleared for individual pull-ups to be enabled.
2: The weak pull-up device is automatically disabled if the pin is in configured as an output.

REGISTER 13-23: ODCONC: PORTC OPEN DRAIN CONTROL REGISTER

R/W-0/0	R/W-0/0	R/W-0/0	R/W-0/0	R/W-0/0	R/W-0/0	R/W-0/0	R/W-0/0
ODC7	ODC6	ODC5	ODC4	ODC3	ODC2	ODC1	ODC0
bit 7							bit 0

Legend:		
R = Readable bit	W = Writable bit	U = Unimplemented bit, read as ‘0’
u = Bit is unchanged	x = Bit is unknown	-n/n = Value at POR and BOR/Value at all other Resets
‘1’ = Bit is set	‘0’ = Bit is cleared	

bit 7-0 **ODC<7:0>:** PORTC Open Drain Enable bits
For RC<7:0> pins, respectively
`1` = Port pin operates as open-drain drive (sink current only)
`0` = Port pin operates as standard push-pull drive (source and sink current)

REGISTER 13-24: SLRCONC: PORTC SLEW RATE CONTROL REGISTER

R/W-1/1	R/W-1/1	R/W-1/1	R/W-1/1	R/W-1/1	R/W-1/1	R/W-1/1	R/W-1/1
SLRC7	SLRC6	SLRC5	SLRC4	SLRC3	SLRC2	SLRC1	SLRC0
bit 7							bit 0

Legend:		
R = Readable bit	W = Writable bit	U = Unimplemented bit, read as ‘0’
u = Bit is unchanged	x = Bit is unknown	-n/n = Value at POR and BOR/Value at all other Resets
‘1’ = Bit is set	‘0’ = Bit is cleared	

bit 7-0 **SLRC<7:0>:** PORTC Slew Rate Enable bits
For RC<7:0> pins, respectively
`1` = Port pin slew rate is limited
`0` = Port pin slews at maximum rate

REGISTER 13-25: INLVLC: PORTC INPUT LEVEL CONTROL REGISTER

R/W-1/1	R/W-1/1	R/W-1/1	R/W-1/1	R/W-1/1	R/W-1/1	R/W-1/1	R/W-1/1
INLVLC7	INLVLC6	INLVLC5	INLVLC4	INLVLC3	INLVLC2	INLVLC1	INLVLC0
bit 7							bit 0

Legend:		
R = Readable bit	W = Writable bit	U = Unimplemented bit, read as ‘0’
u = Bit is unchanged	x = Bit is unknown	-n/n = Value at POR and BOR/Value at all other Resets
‘1’ = Bit is set	‘0’ = Bit is cleared	

bit 7-0 **INLVLC<7:0>:** PORTC Input Level Select bits
For RC<7:0> pins, respectively
`1` = ST input used for PORT reads and interrupt-on-change
`0` = TTL input used for PORT reads and interrupt-on-change

TABLE 13-8: SUMMARY OF REGISTERS ASSOCIATED WITH PORTC

Name	Bit 7	Bit 6	Bit 5	Bit 4	Bit 3	Bit 2	Bit 1	Bit 0	Register on Page
LATC	LATC7	LATC6	LATC5	LATC4	LATC3	LATC2	LATC1	LATC0	142
PORTC	RC7	RC6	RC5	RC4	RC3	RC2	RC1	RC0	142
TRISC	TRISC7	TRISC6	TRISC5	TRISC4	TRISC3	TRISC2	TRISC1	TRISC0	142
WPUC	WPUC7	WPUC6	WPUC5	WPUC4	WPUC3	WPUC2	WPUC1	WPUC0	143
INLVLC	INLVLC7	INLVLC6	INLVLC5	INLVLC4	INLVLC3	INLVLC2	INLVLC1	INLVLC0	144
LATC	LATC7	LATC6	LATC5	LATC4	LATC3	LATC2	LATC1	LATC0	142
ODCONC	ODC7	ODC6	ODC5	ODC4	ODC3	ODC2	ODC1	ODC0	143
PORTC	RC7	RC6	RC5	RC4	RC3	RC2	RC1	RC0	142
SLRCONC	SLRC7	SLRC6	SLRC5	SLRC4	SLRC3	SLRC2	SLRC1	SLRC0	143

Legend: x = unknown, u = unchanged, - = unimplemented locations read as ‘`0`’. Shaded cells are not used by PORTC.

© 2012-2014 Microchip Technology Inc.

13.9 PORTD Registers (PIC16(L)F1784/7 only)

13.9.1 DATA REGISTER

PORTD is an 8-bit wide bidirectional port. The corresponding data direction register is TRISD (Register 13-27). Setting a TRISD bit (= 1) will make the corresponding PORTD pin an input (i.e., put the corresponding output driver in a High-Impedance mode). Clearing a TRISD bit (= 0) will make the corresponding PORTD pin an output (i.e., enable the output driver and put the contents of the output latch on the selected pin). Example 13-1 shows how to initialize an I/O port.

Reading the PORTD register (Register 13-26) reads the status of the pins, whereas writing to it will write to the PORT latch. All write operations are read-modify-write operations. Therefore, a write to a port implies that the port pins are read, this value is modified and then written to the PORT data latch (LATD).

13.9.2 DIRECTION CONTROL

The TRISD register (Register 13-27) controls the PORTD pin output drivers, even when they are being used as analog inputs. The user should ensure the bits in the TRISD register are maintained set when using them as analog inputs. I/O pins configured as analog inputs always read '0'.

13.9.3 OPEN DRAIN CONTROL

The ODCOND register (Register 13-31) controls the open-drain feature of the port. Open drain operation is independently selected for each pin. When an ODCOND bit is set, the corresponding port output becomes an open drain driver capable of sinking current only. When an ODCOND bit is cleared, the corresponding port output pin is the standard push-pull drive capable of sourcing and sinking current.

13.9.4 SLEW RATE CONTROL

The SLRCOND register (Register 13-32) controls the slew rate option for each port pin. Slew rate control is independently selectable for each port pin. When an SLRCOND bit is set, the corresponding port pin drive is slew rate limited. When an SLRCOND bit is cleared, The corresponding port pin drive slews at the maximum rate possible.

13.9.5 INPUT THRESHOLD CONTROL

The INLVLD register (Register 13-33) controls the input voltage threshold for each of the available PORTD input pins. A selection between the Schmitt Trigger CMOS or the TTL Compatible thresholds is available. The input threshold is important in determining the value of a read of the PORTD register and also the level at which an interrupt-on-change occurs, if that feature is enabled. See **Section TABLE 30-1: "Supply Voltage"** for more information on threshold levels.

Note:	Changing the input threshold selection should be performed while all peripheral modules are disabled. Changing the threshold level during the time a module is active may inadvertently generate a transition associated with an input pin, regardless of the actual voltage level on that pin.

13.9.6 PORTD FUNCTIONS AND OUTPUT PRIORITIES

Each PORTD pin is multiplexed with other functions. The pins, their combined functions and their output priorities are shown in Table 13-9.

When multiple outputs are enabled, the actual pin control goes to the peripheral with the highest priority.

Analog input and some digital input functions are not included in the list below. These input functions can remain active when the pin is configured as an output. Certain digital input functions override other port functions and are included in the priority list.

TABLE 13-9: PORTD OUTPUT PRIORITY

Pin Name	Function Priority(1)
RD0	RD0
RD1	OPA3OUT RD1
RD2	RD2
RD3	RD3
RD4	PSMC3F RD4
RD5	PSMC3E RD5
RD6	PSMC3D C3OUT RD6
RD7	PSMC3C C4OUT RD7

Note 1: Priority listed from highest to lowest.

13.10 Register Definitions: PORTD

REGISTER 13-26: PORTD: PORTD REGISTER

R/W-x/u	R/W-x/u	R/W-x/u	R/W-x/u	R/W-x/u	R/W-x/u	R/W-x/u	R/W-x/u
RD7	RD6	RD5	RD4	RD3	RD2	RD1	RD0
bit 7							bit 0

Legend:		
R = Readable bit	W = Writable bit	U = Unimplemented bit, read as ‘0’
u = Bit is unchanged	x = Bit is unknown	-n/n = Value at POR and BOR/Value at all other Resets
‘1’ = Bit is set	‘0’ = Bit is cleared	

bit 7-0 **RD<7:0>**: PORTD General Purpose I/O Pin bits(1)
`1` = Port pin is ≥ V_{IH}
`0` = Port pin is ≤ V_{IL}

Note 1: Writes to PORTD are actually written to corresponding LATD register. Reads from PORTD register is return of actual I/O pin values.

REGISTER 13-27: TRISD: PORTD TRI-STATE REGISTER

R/W-1/1	R/W-1/1	R/W-1/1	R/W-1/1	R/W-1/1	R/W-1/1	R/W-1/1	R/W-1/1
TRISD7	TRISD6	TRISD5	TRISD4	TRISD3	TRISD2	TRISD1	TRISD0
bit 7							bit 0

Legend:		
R = Readable bit	W = Writable bit	U = Unimplemented bit, read as ‘0’
u = Bit is unchanged	x = Bit is unknown	-n/n = Value at POR and BOR/Value at all other Resets
‘1’ = Bit is set	‘0’ = Bit is cleared	

bit 7-0 **TRISD<7:0>:** PORTD Tri-State Control bits
`1` = PORTD pin configured as an input (tri-stated)
`0` = PORTD pin configured as an output

REGISTER 13-28: LATD: PORTD DATA LATCH REGISTER

R/W-x/u	R/W-x/u	R/W-x/u	R/W-x/u	R/W-x/u	R/W-x/u	R/W-x/u	R/W-x/u
LATD7	LATD6	LATD5	LATD4	LATD3	LATD2	LATD1	LATD0
bit 7							bit 0

Legend:		
R = Readable bit	W = Writable bit	U = Unimplemented bit, read as ‘0’
u = Bit is unchanged	x = Bit is unknown	-n/n = Value at POR and BOR/Value at all other Resets
‘1’ = Bit is set	‘0’ = Bit is cleared	

bit 7-0 **LATD<7:0>**: PORTD Output Latch Value bits(1)

Note 1: Writes to PORTD are actually written to corresponding LATD register. Reads from PORTD register is return of actual I/O pin values.

© 2012-2014 Microchip Technology Inc.

REGISTER 13-29: ANSELD: PORTD ANALOG SELECT REGISTER

U-0	U-0	U-0	U-0	U-0	R/W-1/1	R/W-1/1	R/W-1/1
—	—	—	—	—	ANSD2	ANSD1	ANSD0
bit 7							bit 0

Legend:		
R = Readable bit	W = Writable bit	U = Unimplemented bit, read as ‘0’
u = Bit is unchanged	x = Bit is unknown	-n/n = Value at POR and BOR/Value at all other Resets
‘1’ = Bit is set	‘0’ = Bit is cleared	

bit 7-3 **Unimplemented:** Read as ‘0’

bit 2-0 **ANSD<2:0>**: Analog Select between Analog or Digital Function on pins RD<2:0>, respectively
0 = Digital I/O. Pin is assigned to port or digital special function.
1 = Analog input. Pin is assigned as analog input(1). Digital input buffer disabled.

Note 1: When setting a pin to an analog input, the corresponding TRIS bit must be set to Input mode in order to allow external control of the voltage on the pin.

REGISTER 13-30: WPUD: WEAK PULL-UP PORTD REGISTER

R/W-1/1	R/W-1/1	R/W-1/1	R/W-1/1	R/W-1/1	R/W-1/1	R/W-1/1	R/W-1/1
WPUD7	WPUD6	WPUD5	WPUD4	WPUD3	WPUD2	WPUD1	WPUD0
bit 7							bit 0

Legend:		
R = Readable bit	W = Writable bit	U = Unimplemented bit, read as ‘0’
u = Bit is unchanged	x = Bit is unknown	-n/n = Value at POR and BOR/Value at all other Resets
‘1’ = Bit is set	‘0’ = Bit is cleared	

bit 7-0 **WPUD<7:0>**: Weak Pull-up Register bits
1 = Pull-up enabled
0 = Pull-up disabled

Note 1: Global $\overline{\text{WPUEN}}$ bit of the OPTION_REG register must be cleared for individual pull-ups to be enabled.
2: The weak pull-up device is automatically disabled if the pin is in configured as an output.

REGISTER 13-31: ODCOND: PORTD OPEN DRAIN CONTROL REGISTER

R/W-0/0	R/W-0/0	R/W-0/0	R/W-0/0	R/W-0/0	R/W-0/0	R/W-0/0	R/W-0/0
ODD7	ODD6	ODD5	ODD4	ODD3	ODD2	ODD1	ODD0
bit 7							bit 0

Legend:		
R = Readable bit	W = Writable bit	U = Unimplemented bit, read as ‘0’
u = Bit is unchanged	x = Bit is unknown	-n/n = Value at POR and BOR/Value at all other Resets
‘1’ = Bit is set	‘0’ = Bit is cleared	

bit 7-0 **ODD<7:0>:** PORTD Open Drain Enable bits
For RD<7:0> pins, respectively
`1` = Port pin operates as open-drain drive (sink current only)
`0` = Port pin operates as standard push-pull drive (source and sink current)

REGISTER 13-32: SLRCOND: PORTD SLEW RATE CONTROL REGISTER

R/W-1/1	R/W-1/1	R/W-1/1	R/W-1/1	R/W-1/1	R/W-1/1	R/W-1/1	R/W-1/1
SLRD7	SLRD6	SLRD5	SLRD4	SLRD3	SLRD2	SLRD1	SLRD0
bit 7							bit 0

Legend:		
R = Readable bit	W = Writable bit	U = Unimplemented bit, read as ‘0’
u = Bit is unchanged	x = Bit is unknown	-n/n = Value at POR and BOR/Value at all other Resets
‘1’ = Bit is set	‘0’ = Bit is cleared	

bit 7-0 **SLRD<7:0>:** PORTD Slew Rate Enable bits
For RD<7:0> pins, respectively
`1` = Port pin slew rate is limited
`0` = Port pin slews at maximum rate

REGISTER 13-33: INLVLD: PORTD INPUT LEVEL CONTROL REGISTER

R/W-1/1	R/W-1/1	R/W-1/1	R/W-1/1	R/W-1/1	R/W-1/1	R/W-1/1	R/W-1/1
INLVLD7	INLVLD6	INLVLD5	INLVLD4	INLVLD3	INLVLD2	INLVLD1	INLVLD0
bit 7							bit 0

Legend:		
R = Readable bit	W = Writable bit	U = Unimplemented bit, read as ‘0’
u = Bit is unchanged	x = Bit is unknown	-n/n = Value at POR and BOR/Value at all other Resets
‘1’ = Bit is set	‘0’ = Bit is cleared	

bit 7-0 **INLVLD<7:0>:** PORTD Input Level Select bits
For RD<7:0> pins, respectively
`1` = ST input used for PORT reads and interrupt-on-change
`0` = TTL input used for PORT reads and interrupt-on-change

© 2012-2014 Microchip Technology Inc.

TABLE 13-10: SUMMARY OF REGISTERS ASSOCIATED WITH PORTD

Name	Bit 7	Bit 6	Bit 5	Bit 4	Bit 3	Bit 2	Bit 1	Bit 0	Register on Page
ANSELD	—	—	—	—	—	ANSD2	ANSD1	ANSD0	147
INLVLD	INLVLD7	INLVLD6	INLVLD5	INLVLD4	INLVLD3	INLVLD2	INLVLD1	INLVLD0	148
LATD	LATD7	LATD6	LATD5	LATD4	LATD3	LATD2	LATD1	LATD0	146
ODCOND	ODD7	ODD6	ODD5	ODD4	ODD3	ODD2	ODD1	ODD0	148
PORTD	RD7	RD6	RD5	RD4	RD3	RD2	RD1	RD0	146
SLRCOND	SLRD7	SLRD6	SLRD5	SLRD4	SLRD3	SLRD2	SLRD1	SLRD0	148
TRISD	TRISD7	TRISD6	TRISD5	TRISD4	TRISD3	TRISD2	TRISD1	TRISD0	146
WPUD	WPUD7	WPUD6	WPUD5	WPUD4	WPUD3	WPUD2	WPUD1	WPUD0	147

Legend: x = unknown, u = unchanged, - = unimplemented locations read as ‘0’. Shaded cells are not used by PORTD.

13.11 PORTE Registers

RE3 is input only, and also functions as $\overline{\text{MCLR}}$. The $\overline{\text{MCLR}}$ feature can be disabled via a configuration fuse. RE3 also supplies the programming voltage. The TRIS bit for RE3 (TRISE3) always reads '1'.

13.11.1 DATA REGISTER

PORTE is an 8-bit wide bidirectional port. The corresponding data direction register is TRISE (Register 13-35). Setting a TRISE bit (= 1) will make the corresponding PORTE pin an input (i.e., put the corresponding output driver in a High-Impedance mode). Clearing a TRISE bit (= 0) will make the corresponding PORTE pin an output (i.e., enable the output driver and put the contents of the output latch on the selected pin). Example 13-1 shows how to initialize an I/O port.

Reading the PORTE register (Register 13-34) reads the status of the pins, whereas writing to it will write to the PORT latch. All write operations are read-modify-write operations. Therefore, a write to a port implies that the port pins are read, this value is modified and then written to the PORT data latch (LATE).

13.11.2 DIRECTION CONTROL

The TRISE register (Register 13-35) controls the PORTE pin output drivers, even when they are being used as analog inputs. The user should ensure the bits in the TRISE register are maintained set when using them as analog inputs. I/O pins configured as analog inputs always read '0'.

13.11.3 OPEN DRAIN CONTROL

The ODCONE register (Register 13-31) controls the open-drain feature of the port. Open drain operation is independently selected for each pin. When an ODCONE bit is set, the corresponding port output becomes an open drain driver capable of sinking current only. When an ODCONE bit is cleared, the corresponding port output pin is the standard push-pull drive capable of sourcing and sinking current.

13.11.4 SLEW RATE CONTROL

The SLRCOND register (Register 13-32) controls the slew rate option for each port pin. Slew rate control is independently selectable for each port pin. When an SLRCOND bit is set, the corresponding port pin drive is slew rate limited. When an SLRCOND bit is cleared, The corresponding port pin drive slews at the maximum rate possible.

13.11.5 INPUT THRESHOLD CONTROL

The INLVLD register (Register 13-33) controls the input voltage threshold for each of the available PORTD input pins. A selection between the Schmitt Trigger CMOS or the TTL Compatible thresholds is available. The input threshold is important in determining the value of a read of the PORTD register and also the level at which an interrupt-on-change occurs, if that feature is enabled. See **Section 30.1 "DC Characteristics: PIC16(L)F1784/6/7-I/E (Industrial, Extended)"** for more information on threshold levels.

Note:	Changing the input threshold selection should be performed while all peripheral modules are disabled. Changing the threshold level during the time a module is active may inadvertently generate a transition associated with an input pin, regardless of the actual voltage level on that pin.

13.11.6 INPUT THRESHOLD CONTROL

The INLVLE register (Register 13-41) controls the input voltage threshold for each of the available PORTE input pins. A selection between the Schmitt Trigger CMOS or the TTL Compatible thresholds is available. The input threshold is important in determining the value of a read of the PORTE register and also the level at which an interrupt-on-change occurs, if that feature is enabled. See **Section TABLE 30-1: "Supply Voltage"** for more information on threshold levels.

Note:	Changing the input threshold selection should be performed while all peripheral modules are disabled. Changing the threshold level during the time a module is active may inadvertently generate a transition associated with an input pin, regardless of the actual voltage level on that pin.

© 2012-2014 Microchip Technology Inc.

13.11.7 PORTE FUNCTIONS AND OUTPUT PRIORITIES(1)

Each PORTE pin is multiplexed with other functions. The pins, their combined functions and their output priorities are shown in Table 13-11.

When multiple outputs are enabled, the actual pin control goes to the peripheral with the highest priority.

Analog input and some digital input functions are not included in the list below. These input functions can remain active when the pin is configured as an output. Certain digital input functions override other port functions and are included in the priority list.

Note 1: Applies to 40/44-pin devices only.

TABLE 13-11: PORTE OUTPUT PRIORITY

Pin Name	Function Priority(1)
RE0	CCP3 RE0
RE1	PSMC3B RE1
RE2	PSMC3A RE2

Note 1: Priority listed from highest to lowest.

13.12 Register Definitions: PORTE

REGISTER 13-34: PORTE: PORTE REGISTER

U-0	U-0	U-0	U-0	R-x/u	R/W-x/u	R/W-x/u	R/W-x/u
—	—	—	—	RE3	RE2(1)	RE1(1)	RE0(1)
bit 7							bit 0

Legend:		
R = Readable bit	W = Writable bit	U = Unimplemented bit, read as ‘0’
u = Bit is unchanged	x = Bit is unknown	-n/n = Value at POR and BOR/Value at all other Resets
‘1’ = Bit is set	‘0’ = Bit is cleared	

bit 7-4 **Unimplemented**: Read as ‘0’

bit 3-0 **RE<3:0>**: PORTE Input Pin bit(1)
1 = Port pin is > V_{IH}
0 = Port pin is < V_{IL}

Note 1: RE<2:0> are available on PIC16(L)F1784/7 only.

REGISTER 13-35: TRISE: PORTE TRI-STATE REGISTER

U-0	U-0	U-0	U-0	U-1(1)	R/W-1/1	R/W-1/1	R/W-1/1
—	—	—	—	—	TRISE2(2)	TRISE1(2)	TRISE0(2)
bit 7							bit 0

Legend:		
R = Readable bit	W = Writable bit	U = Unimplemented bit, read as ‘0’
u = Bit is unchanged	x = Bit is unknown	-n/n = Value at POR and BOR/Value at all other Resets
‘1’ = Bit is set	‘0’ = Bit is cleared	

bit 7-4 **Unimplemented**: Read as ‘0’

bit 3 **Unimplemented**: Read as ‘1’

bit 2-0 **TRISA<2:0>:** PORTA Tri-State Control bit(2)
1 = PORTA pin configured as an input (tri-stated)
0 = PORTA pin configured as an output

Note 1: Unimplemented, read as ‘1’.
2: TRISE<2:0> are available on PIC16(L)F1784/7 only.

© 2012-2014 Microchip Technology Inc.

REGISTER 13-36: LATE: PORTE DATA LATCH REGISTER(2)

U-0	U-0	U-0	U-0	U-0	R/W-x/u	R/W-x/u	R/W-x/u
—	—	—	—	—	LATE2	LATE1	LATE0
bit 7							bit 0

Legend:		
R = Readable bit	W = Writable bit	U = Unimplemented bit, read as ‘0’
u = Bit is unchanged	x = Bit is unknown	-n/n = Value at POR and BOR/Value at all other Resets
‘1’ = Bit is set	‘0’ = Bit is cleared	

bit 7-3 **Unimplemented**: Read as ‘0’

bit 2-0 **LATE<2:0>**: PORTE Output Latch Value bits(2)

Note 1: Writes to PORTE are actually written to corresponding LATE register. Reads from PORTE register is return of actual I/O pin values.

2: LATE<2:0> are available on PIC16(L)F1784/7 only.

REGISTER 13-37: ANSELE: PORTE ANALOG SELECT REGISTER(2)

U-0	U-0	U-0	U-0	U-0	R/W-1/1	R/W-1/1	R/W-1/1
—	—	—	—	—	ANSE2	ANSE1	ANSE0
bit 7							bit 0

Legend:		
R = Readable bit	W = Writable bit	U = Unimplemented bit, read as ‘0’
u = Bit is unchanged	x = Bit is unknown	-n/n = Value at POR and BOR/Value at all other Resets
‘1’ = Bit is set	‘0’ = Bit is cleared	

bit 7-3 **Unimplemented:** Read as ‘0’

bit 2-0 **ANSE<2:0>**: Analog Select between Analog or Digital Function on pins RE<2:0>, respectively
0 = Digital I/O. Pin is assigned to port or digital special function.
1 = Analog input. Pin is assigned as analog input(1). Digital input buffer disabled.

Note 1: When setting a pin to an analog input, the corresponding TRIS bit must be set to Input mode in order to allow external control of the voltage on the pin.

2: ANSELE<2:0> are available on PIC16(L)F1784/7 only.

REGISTER 13-38: WPUE: WEAK PULL-UP PORTE REGISTER

U-0	U-0	U-0	U-0	R/W-1/1	R/W-1/1	R/W-1/1	R/W-1/1
—	—	—	—	WPUE3	WPUE2(3)	WPUE1(3)	WPUE0(3)
bit 7							bit 0

Legend:		
R = Readable bit	W = Writable bit	U = Unimplemented bit, read as ‘0’
u = Bit is unchanged	x = Bit is unknown	-n/n = Value at POR and BOR/Value at all other Resets
‘1’ = Bit is set	‘0’ = Bit is cleared	

bit 7-4 **Unimplemented:** Read as ‘0’

bit 3-0 **WPUE<3:0>:** Weak Pull-up Register bit(3)
1 = Pull-up enabled
0 = Pull-up disabled

Note 1: Global $\overline{\text{WPUEN}}$ bit of the OPTION_REG register must be cleared for individual pull-ups to be enabled.
2: The weak pull-up device is automatically disabled if the pin is in configured as an output.
3: WPUSE<2:0> are available on PIC16(L)F1784/7 only.

REGISTER 13-39: ODCONE: PORTE OPEN DRAIN CONTROL REGISTER(1)

U-0	U-0	U-0	U-0	U-0	R/W-0/0	R/W-0/0	R/W-0/0
—	—	—	—	—	ODE2	ODE1	ODE0
bit 7							bit 0

Legend:		
R = Readable bit	W = Writable bit	U = Unimplemented bit, read as ‘0’
u = Bit is unchanged	x = Bit is unknown	-n/n = Value at POR and BOR/Value at all other Resets
‘1’ = Bit is set	‘0’ = Bit is cleared	

bit 7-3 **Unimplemented:** Read as ‘0’

bit 2-0 **ODE<2:0>:** PORTE Open Drain Enable bits
For RE<2:0> pins, respectively
1 = Port pin operates as open-drain drive (sink current only)
0 = Port pin operates as standard push-pull drive (source and sink current)

Note 1: ODCONE<2:0> are available on PIC16(L)F1784/7 only.

© 2012-2014 Microchip Technology Inc.

REGISTER 13-40: SLRCONE: PORTE SLEW RATE CONTROL REGISTER(1)

U-0	U-0	U-0	U-0	U-0	R/W-0/0	R/W-0/0	R/W-0/0
—	—	—	—	—	SLRE2	SLRE1	SLRE0
bit 7							bit 0

Legend:		
R = Readable bit	W = Writable bit	U = Unimplemented bit, read as ‘0’
u = Bit is unchanged	x = Bit is unknown	-n/n = Value at POR and BOR/Value at all other Resets
‘1’ = Bit is set	‘0’ = Bit is cleared	

bit 7-3 **Unimplemented:** Read as ‘0’

bit 2-0 **SLRE<2:0>:** PORTE Slew Rate Enable bits
For RE<2:0> pins, respectively
1 = Port pin slew rate is limited
0 = Port pin slews at maximum rate

Note 1: SLRE<2:0> are available on PIC16(L)F1784/7 only.

REGISTER 13-41: INLVLE: PORTE INPUT LEVEL CONTROL REGISTER

U-0	U-0	U-0	U-0	R/W-1/1	R/W-1/1	R/W-1/1	R/W-1/1
—	—	—	—	INLVLE3	INLVLE2(1)	INLVLE1(1)	INLVLE0(1)
bit 7							bit 0

Legend:		
R = Readable bit	W = Writable bit	U = Unimplemented bit, read as ‘0’
u = Bit is unchanged	x = Bit is unknown	-n/n = Value at POR and BOR/Value at all other Resets
‘1’ = Bit is set	‘0’ = Bit is cleared	

bit 7-4 **Unimplemented:** Read as ‘0’

bit 3-0 **INLVLE<3:0>:** PORTE Input Level Select bit(1)
1 = ST input used for PORT reads and interrupt-on-change
0 = TTL input used for PORT reads and interrupt-on-change

Note 1: INLVLE<2:0> are available on PIC16(L)F1784/7 only.

TABLE 13-12: SUMMARY OF REGISTERS ASSOCIATED WITH PORTE

Name	Bit 7	Bit 6	Bit 5	Bit 4	Bit 3	Bit 2	Bit 1	Bit 0	Register on Page
ADCON0	ADRMD	CHS<4:0>					GO/$\overline{\text{DONE}}$	ADON	172
ANSELE	—	—	—	—	—	ANSE2	ANSE1	ANSE0	153
INLVLE	—	—	—	—	INLVLE3	INLVLE2(2)	INLVLE1(2)	INLVLE0(2)	155
LATE(2)	—	—	—	—	—	LATE2	LATE1	LATE0	153
ODCONE(2)	—	—	—	—	—	ODE2	ODE1	ODE0	154
PORTE	—	—	—	—	RE3	RE2(2)	RE1(2)	RE0(2)	152
SLRCONE(2)	—	—	—	—	—	SLRE2	SLRE1	SLRE0	155
TRISE	—	—	—	—	—(1)	TRISE2(2)	TRISE1(2)	TRISE0(2)	152
WPUE	—	—	—	—	WPUE3	WPUE2(2)	WPUE1(2)	WPUE0(2)	154

Legend: x = unknown, u = unchanged, – = unimplemented locations read as ‘0’. Shaded cells are not used by PORTE.
Note 1: Unimplemented, read as ‘1’.
2: PIC16(L)F1784/7 only

14.0 INTERRUPT-ON-CHANGE

All pins on all ports can be configured to operate as Interrupt-On-Change (IOC) pins. An interrupt can be generated by detecting a signal that has either a rising edge or a falling edge. Any individual pin, or combination of pins, can be configured to generate an interrupt. The interrupt-on-change module has the following features:

- Interrupt-on-Change enable (Master Switch)
- Individual pin configuration
- Rising and falling edge detection
- Individual pin interrupt flags

Figure 14-1 is a block diagram of the IOC module.

14.1 Enabling the Module

To allow individual pins to generate an interrupt, the IOCIE bit of the INTCON register must be set. If the IOCIE bit is disabled, the edge detection on the pin will still occur, but an interrupt will not be generated.

14.2 Individual Pin Configuration

For each pin, a rising edge detector and a falling edge detector are present. To enable a pin to detect a rising edge, the associated bit of the IOCxP register is set. To enable a pin to detect a falling edge, the associated bit of the IOCxN register is set.

A pin can be configured to detect rising and falling edges simultaneously by setting the associated bits in both of the IOCxP and IOCxN registers.

14.3 Interrupt Flags

The bits located in the IOCxF registers are status flags that correspond to the Interrupt-on-change pins of each port. If an expected edge is detected on an appropriately enabled pin, then the status flag for that pin will be set, and an interrupt will be generated if the IOCIE bit is set. The IOCIF bit of the INTCON register reflects the status of all IOCxF bits.

14.4 Clearing Interrupt Flags

The individual status flags, (IOCxF register bits), can be cleared by resetting them to zero. If another edge is detected during this clearing operation, the associated status flag will be set at the end of the sequence, regardless of the value actually being written.

In order to ensure that no detected edge is lost while clearing flags, only AND operations masking out known changed bits should be performed. The following sequence is an example of what should be performed.

EXAMPLE 14-1: CLEARING INTERRUPT FLAGS (PORTA EXAMPLE)

```
MOVLW  0xff
XORWF  IOCAF, W
ANDWF  IOCAF, F
```

14.5 Operation in Sleep

The interrupt-on-change interrupt sequence will wake the device from Sleep mode, if the IOCIE bit is set.

If an edge is detected while in Sleep mode, the affected IOCxF register will be updated prior to the first instruction executed out of Sleep.

© 2012-2014 Microchip Technology Inc.

FIGURE 14-1: INTERRUPT-ON-CHANGE BLOCK DIAGRAM

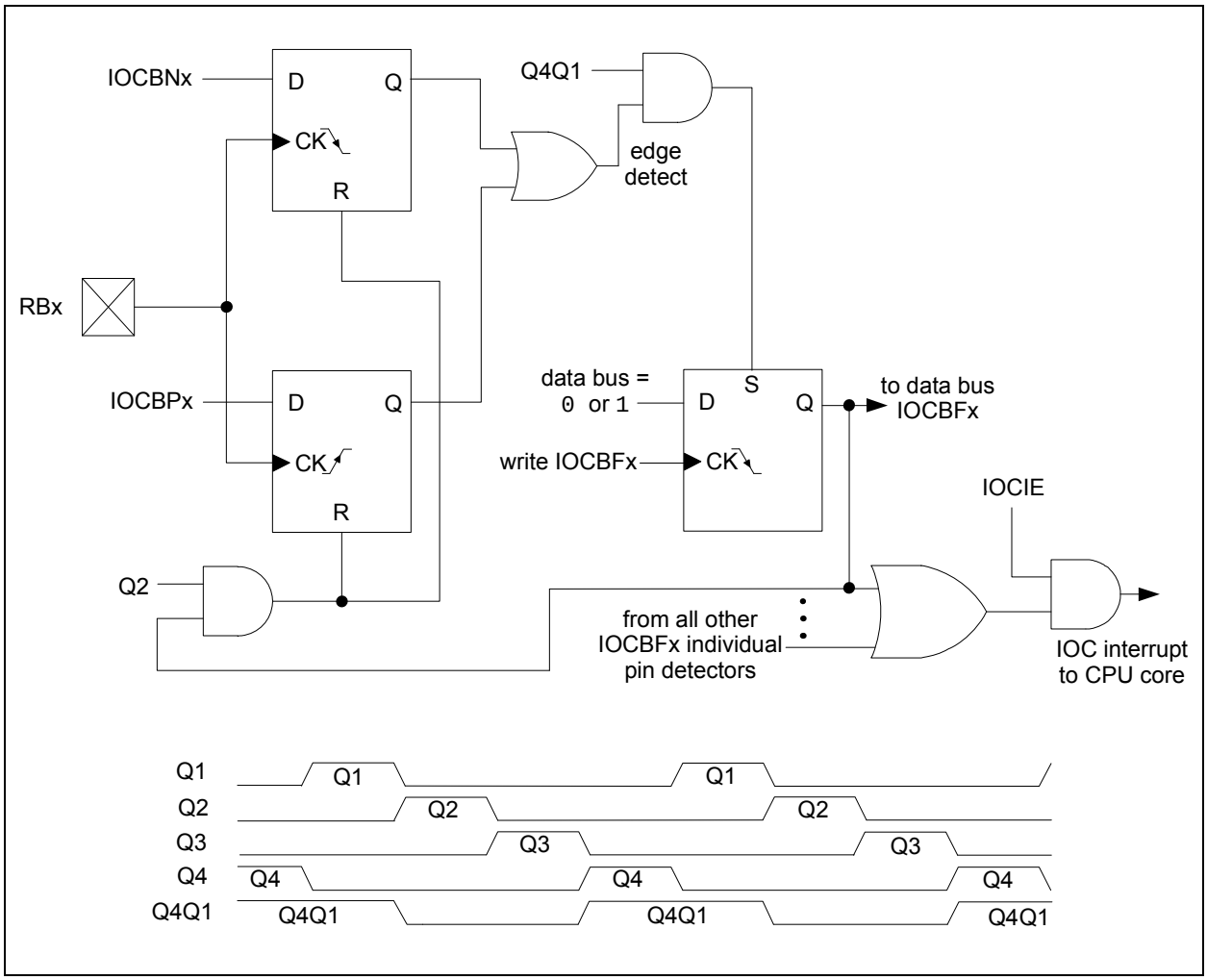

14.6 Register Definitions: Interrupt-on-Change Control

REGISTER 14-1: IOCxP: INTERRUPT-ON-CHANGE POSITIVE EDGE REGISTER

R/W-0/0	R/W-0/0	R/W-0/0	R/W-0/0	R/W-0/0	R/W-0/0	R/W-0/0	R/W-0/0
IOCxP7	IOCxP6	IOCxP5	IOCxP4	IOCxP3	IOCxP2	IOCxP1	IOCxP0
bit 7							bit 0

Legend:		
R = Readable bit	W = Writable bit	U = Unimplemented bit, read as ‘0’
u = Bit is unchanged	x = Bit is unknown	-n/n = Value at POR and BOR/Value at all other Resets
‘1’ = Bit is set	‘0’ = Bit is cleared	

bit 7-0 **IOCxP<7:0>:** Interrupt-on-Change Positive Edge Enable bits(1)

`1` = Interrupt-on-Change enabled on the pin for a positive going edge. Associated Status bit and interrupt flag will be set upon detecting an edge.

`0` = Interrupt-on-Change disabled for the associated pin.

Note 1: For IOCEP register, bit 3 (IOCEP3) is the only implemented bit in the register.

REGISTER 14-2: IOCxN: INTERRUPT-ON-CHANGE NEGATIVE EDGE REGISTER

R/W-0/0	R/W-0/0	R/W-0/0	R/W-0/0	R/W-0/0	R/W-0/0	R/W-0/0	R/W-0/0
IOCxN7	IOCxN6	IOCxN5	IOCxN4	IOCxN3	IOCxN2	IOCxN1	IOCxN0
bit 7							bit 0

Legend:		
R = Readable bit	W = Writable bit	U = Unimplemented bit, read as ‘0’
u = Bit is unchanged	x = Bit is unknown	-n/n = Value at POR and BOR/Value at all other Resets
‘1’ = Bit is set	‘0’ = Bit is cleared	

bit 7-0 **IOCxN<7:0>:** Interrupt-on-Change Negative Edge Enable bits(1)

`1` = Interrupt-on-Change enabled on the pin for a negative going edge. Associated Status bit and interrupt flag will be set upon detecting an edge.

`0` = Interrupt-on-Change disabled for the associated pin.

Note 1: For IOCEN register, bit 3 (IOCEN3) is the only implemented bit in the register.

© 2012-2014 Microchip Technology Inc.

REGISTER 14-3: IOCxF: INTERRUPT-ON-CHANGE FLAG REGISTER

R/W/HS-0/0	R/W/HS-0/0	R/W/HS-0/0	R/W/HS-0/0	R/W/HS-0/0	R/W/HS-0/0	R/W/HS-0/0	R/W/HS-0/0
IOCxF7	IOCxF6	IOCxF5	IOCxF4	IOCxF3	IOCxF2	IOCxF1	IOCxF0
bit 7							bit 0

Legend:		
R = Readable bit	W = Writable bit	U = Unimplemented bit, read as ‘0’
u = Bit is unchanged	x = Bit is unknown	-n/n = Value at POR and BOR/Value at all other Resets
‘1’ = Bit is set	‘0’ = Bit is cleared	HS - Bit is set in hardware

bit 7-0 **IOCxF<7:0>:** Interrupt-on-Change Flag bits(1)

`1` = An enabled change was detected on the associated pin.
Set when IOCxPx = `1` and a rising edge was detected RBx, or when IOCxNx = `1` and a falling edge was detected on RBx.

`0` = No change was detected, or the user cleared the detected change.

Note 1: For IOCEF register, bit 3 (IOCEF3) is the only implemented bit in the register.

TABLE 14-1: SUMMARY OF REGISTERS ASSOCIATED WITH INTERRUPT-ON-CHANGE

Name	Bit 7	Bit 6	Bit 5	Bit 4	Bit 3	Bit 2	Bit 1	Bit 0	Register on Page
ANSELB	—	ANSB6	ANSB5	ANSB4	ANSB3	ANSB2	ANSB1	ANSB0	138
INTCON	GIE	PEIE	TMR0IE	INTE	IOCIE	TMR0IF	INTF	IOCIF	93
IOCAF	IOCAF7	IOCAF6	IOCAF5	IOCAF4	IOCAF3	IOCAF2	IOCAF1	IOCAF0	159
IOCAN	IOCAN7	IOCAN6	IOCAN5	IOCAN4	IOCAN3	IOCAN2	IOCAN1	IOCAN0	158
IOCAP	IOCAP7	IOCAP6	IOCAP5	IOCAP4	IOCAP3	IOCAP2	IOCAP1	IOCAP0	158
IOCBF	IOCBF7	IOCBF6	IOCBF5	IOCBF4	IOCBF3	IOCBF2	IOCBF1	IOCBF0	159
IOCBN	IOCBN7	IOCBN6	IOCBN5	IOCBN4	IOCBN3	IOCBN2	IOCBN1	IOCBN0	158
IOCBP	IOCBP7	IOCBP6	IOCBP5	IOCBP4	IOCBP3	IOCBP2	IOCBP1	IOCBP0	158
IOCCF	IOCCF7	IOCCF6	IOCCF5	IOCCF4	IOCCF3	IOCCF2	IOCCF1	IOCCF0	159
IOCCN	IOCCN7	IOCCN6	IOCCN5	IOCCN4	IOCCN3	IOCCN2	IOCCN1	IOCCN0	158
IOCCP	IOCCP7	IOCCP6	IOCCP5	IOCCP4	IOCCP3	IOCCP2	IOCCP1	IOCCP0	158
IOCEF	—	—	—	—	IOCEF3	—	—	—	159
IOCEN	—	—	—	—	IOCEN3	—	—	—	158
IOCEP	—	—	—	—	IOCEP3	—	—	—	158
TRISB	TRISB7	TRISB6	TRISB5	TRISB4	TRISB3	TRISB2	TRISB1	TRISB0	137

Legend: — = unimplemented location, read as ‘0’. Shaded cells are not used by interrupt-on-change.

15.0 FIXED VOLTAGE REFERENCE (FVR)

The Fixed Voltage Reference, or FVR, is a stable voltage reference, independent of VDD, with 1.024V, 2.048V or 4.096V selectable output levels. The output of the FVR can be configured to supply a reference voltage to the following:

- ADC input channel
- ADC positive reference
- Comparator positive input
- Digital-to-Analog Converter (DAC)

The FVR can be enabled by setting the FVREN bit of the FVRCON register.

15.1 Independent Gain Amplifiers

The output of the FVR supplied to the ADC, Comparators, and DAC is routed through two independent programmable gain amplifiers. Each amplifier can be programmed for a gain of 1x, 2x or 4x, to produce the three possible voltage levels.

The ADFVR<1:0> bits of the FVRCON register are used to enable and configure the gain amplifier settings for the reference supplied to the ADC module. Reference **Section 17.0 "Analog-to-Digital Converter (ADC) Module"** for additional information.

The CDAFVR<1:0> bits of the FVRCON register are used to enable and configure the gain amplifier settings for the reference supplied to the DAC and comparator module. Reference **Section 19.0 "Digital-to-Analog Converter (DAC) Module"** and **Section 20.0 "Comparator Module"** for additional information.

15.2 FVR Stabilization Period

When the Fixed Voltage Reference module is enabled, it requires time for the reference and amplifier circuits to stabilize. Once the circuits stabilize and are ready for use, the FVRRDY bit of the FVRCON register will be set. See **Section 30.0 "Electrical Specifications"** for the minimum delay requirement.

15.3 FVR Buffer Stabilization Period

When either FVR Buffer1 or FVR Buffer 2 is enabled, the buffer amplifier circuits require 30 μs to stabilize. This stabilization time is required even when the FVR is already operating and stable.

© 2012-2014 Microchip Technology Inc.

FIGURE 15-1: VOLTAGE REFERENCE BLOCK DIAGRAM

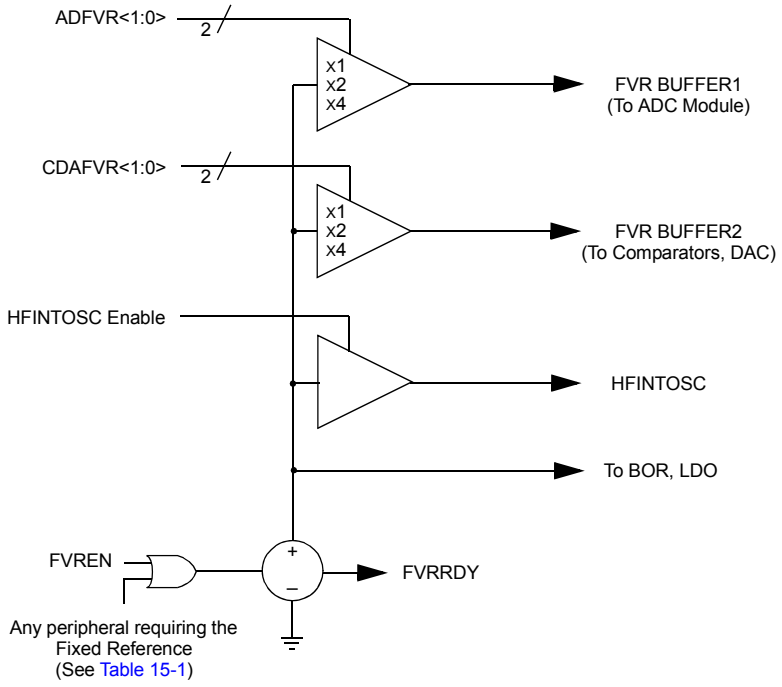

TABLE 15-1: PERIPHERALS REQUIRING THE FIXED VOLTAGE REFERENCE (FVR)

Peripheral	Conditions	Description
HFINTOSC	FOSC<2:0> = 100 and IRCF<3:0> ≠ 000x	INTOSC is active and device is not in Sleep
BOR	BOREN<1:0> = 11	BOR always enabled
	BOREN<1:0> = 10 and BORFS = 1	BOR disabled in Sleep mode, BOR Fast Start enabled.
	BOREN<1:0> = 01 and BORFS = 1	BOR under software control, BOR Fast Start enabled
LDO	All PIC16F1784/6/7 devices, when VREGPM = 1 and not in Sleep	The device runs off of the ULP regulator when in Sleep mode.
PSMC 64 MHz	PxSRC<1:0>	64 MHz clock forces HFINTOSC on during Sleep.

15.4 Register Definitions: FVR Control

REGISTER 15-1: FVRCON: FIXED VOLTAGE REFERENCE CONTROL REGISTER

R/W-0/0	R-q/q	R/W-0/0	R/W-0/0	R/W-0/0	R/W-0/0	R/W-0/0	R/W-0/0
FVREN	FVRRDY(1)	TSEN	TSRNG	CDAFVR<1:0>		ADFVR<1:0>	
bit 7							bit 0

Legend:		
R = Readable bit	W = Writable bit	U = Unimplemented bit, read as ‘0’
u = Bit is unchanged	x = Bit is unknown	-n/n = Value at POR and BOR/Value at all other Resets
‘1’ = Bit is set	‘0’ = Bit is cleared	q = Value depends on condition

bit 7 **FVREN:** Fixed Voltage Reference Enable bit
1 = Fixed Voltage Reference is enabled
0 = Fixed Voltage Reference is disabled

bit 6 **FVRRDY:** Fixed Voltage Reference Ready Flag bit(1)
1 = Fixed Voltage Reference output is ready for use
0 = Fixed Voltage Reference output is not ready or not enabled

bit 5 **TSEN:** Temperature Indicator Enable bit(3)
1 = Temperature Indicator is enabled
0 = Temperature Indicator is disabled

bit 4 **TSRNG:** Temperature Indicator Range Selection bit(3)
1 = $V_{OUT} = V_{DD} - 4V_T$ (High Range)
0 = $V_{OUT} = V_{DD} - 2V_T$ (Low Range)

bit 3-2 CDAFVR<1:0>: Comparator and DAC Fixed Voltage Reference Selection bit
11 = Comparator and DAC Fixed Voltage Reference Peripheral output is 4x (4.096V)(2)
10 = Comparator and DAC Fixed Voltage Reference Peripheral output is 2x (2.048V)(2)
01 = Comparator and DAC Fixed Voltage Reference Peripheral output is 1x (1.024V)
00 = Comparator and DAC Fixed Voltage Reference Peripheral output is off.

bit 1-0 **ADFVR<1:0>:** ADC Fixed Voltage Reference Selection bit
11 = ADC Fixed Voltage Reference Peripheral output is 4x (4.096V)(2)
10 = ADC Fixed Voltage Reference Peripheral output is 2x (2.048V)(2)
01 = ADC Fixed Voltage Reference Peripheral output is 1x (1.024V)
00 = ADC Fixed Voltage Reference Peripheral output is off.

Note 1: FVRRDY is always ‘1’ on “F” devices only.
2: Fixed Voltage Reference output cannot exceed V_{DD}.
3: See **Section 16.0 “Temperature Indicator Module”** for additional information.

TABLE 15-2: SUMMARY OF REGISTERS ASSOCIATED WITH FIXED VOLTAGE REFERENCE

Name	Bit 7	Bit 6	Bit 5	Bit 4	Bit 3	Bit 2	Bit 1	Bit 0	Register on page
FVRCON	FVREN	FVRRDY	TSEN	TSRNG	CDAFVR<1:0>		ADFVR<1:0>		162

Legend: Shaded cells are not used with the Fixed Voltage Reference.

© 2012-2014 Microchip Technology Inc.

16.0 TEMPERATURE INDICATOR MODULE

This family of devices is equipped with a temperature circuit designed to measure the operating temperature of the silicon die. The circuit's range of operating temperature falls between -40°C and +85°C. The output is a voltage that is proportional to the device temperature. The output of the temperature indicator is internally connected to the device ADC.

The circuit may be used as a temperature threshold detector or a more accurate temperature indicator, depending on the level of calibration performed. A one-point calibration allows the circuit to indicate a temperature closely surrounding that point. A two-point calibration allows the circuit to sense the entire range of temperature more accurately. Reference Application Note AN1333, "*Use and Calibration of the Internal Temperature Indicator*" (DS01333) for more details regarding the calibration process.

16.1 Circuit Operation

Figure 16-1 shows a simplified block diagram of the temperature circuit. The proportional voltage output is achieved by measuring the forward voltage drop across multiple silicon junctions.

Equation 16-1 describes the output characteristics of the temperature indicator.

EQUATION 16-1: VOUT RANGES

High Range: $V_{OUT} = V_{DD} - 4V_T$

Low Range: $V_{OUT} = V_{DD} - 2V_T$

The temperature sense circuit is integrated with the Fixed Voltage Reference (FVR) module. See **Section 15.0 "Fixed Voltage Reference (FVR)"** for more information.

The circuit is enabled by setting the TSEN bit of the FVRCON register. When disabled, the circuit draws no current.

The circuit operates in either high or low range. The high range, selected by setting the TSRNG bit of the FVRCON register, provides a wider output voltage. This provides more resolution over the temperature range, but may be less consistent from part to part. This range requires a higher bias voltage to operate and thus, a higher VDD is needed.

The low range is selected by clearing the TSRNG bit of the FVRCON register. The low range generates a lower voltage drop and thus, a lower bias voltage is needed to operate the circuit. The low range is provided for low-voltage operation.

FIGURE 16-1: TEMPERATURE CIRCUIT DIAGRAM

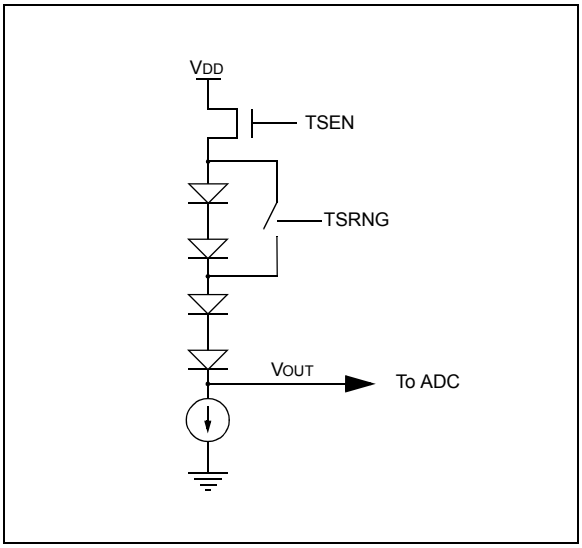

16.2 Minimum Operating VDD

When the temperature circuit is operated in low range, the device may be operated at any operating voltage that is within specifications.

When the temperature circuit is operated in high range, the device operating voltage, VDD, must be high enough to ensure that the temperature circuit is correctly biased.

Table 16-1 shows the recommended minimum VDD vs. range setting.

TABLE 16-1: RECOMMENDED VDD VS. RANGE

Min. VDD, TSRNG = 1	Min. VDD, TSRNG = 0
3.6V	1.8V

16.3 Temperature Output

The output of the circuit is measured using the internal Analog-to-Digital Converter. A channel is reserved for the temperature circuit output. Refer to **Section 17.0 "Analog-to-Digital Converter (ADC) Module"** for detailed information.

16.4 ADC Acquisition Time

To ensure accurate temperature measurements, the user must wait at least 200 µs after the ADC input multiplexer is connected to the temperature indicator output before the conversion is performed. In addition, the user must wait 200 µs between sequential conversions of the temperature indicator output.

TABLE 16-2: SUMMARY OF REGISTERS ASSOCIATED WITH THE TEMPERATURE INDICATOR

Name	Bit 7	Bit 6	Bit 5	Bit 4	Bit 3	Bit 2	Bit 1	Bit 0	Register on page
FVRCON	FVREN	FVRRDY	TSEN	TSRNG	—	—	ADFVR<1:0>		161

Legend: Shaded cells are unused by the temperature indicator module.

© 2012-2014 Microchip Technology Inc.

17.0 ANALOG-TO-DIGITAL CONVERTER (ADC) MODULE

The Analog-to-Digital Converter (ADC) allows conversion of a single-ended and differential analog input signals to a 12-bit binary representation of that signal. This device uses analog inputs, which are multiplexed into a single sample and hold circuit. The output of the sample and hold is connected to the input of the converter. The converter generates a 12-bit binary result via successive approximation and stores the conversion result into the ADC result registers (ADRESH:ADRESL register pair). Figure 17-1 shows the block diagram of the ADC.

The ADC voltage reference is software selectable to be either internally generated or externally supplied.

The ADC can generate an interrupt upon completion of a conversion. This interrupt can be used to wake-up the device from Sleep.

FIGURE 17-1: ADC BLOCK DIAGRAM

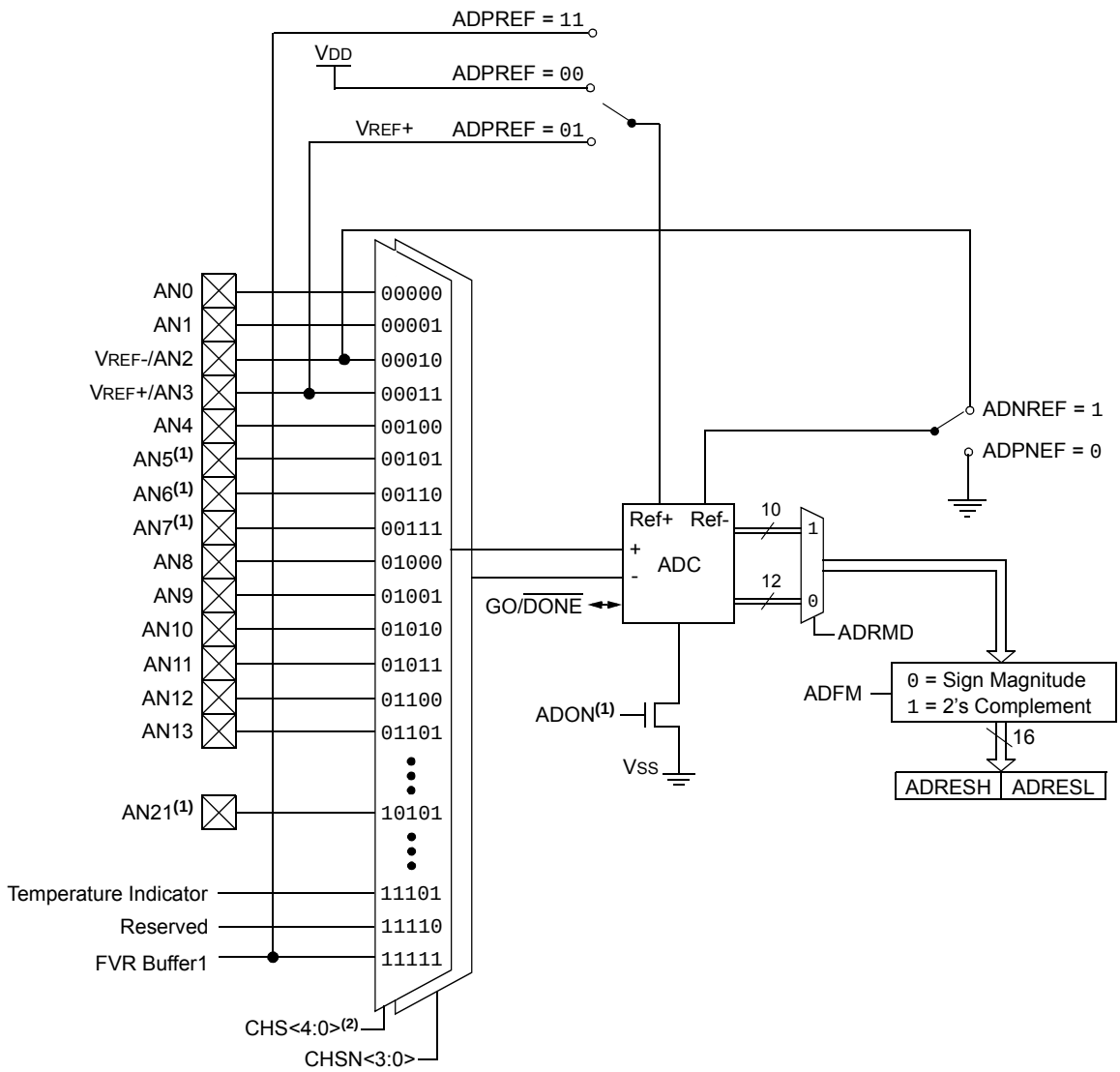

Note 1: When ADON = 0, all multiplexer inputs are disconnected. PIC16(L)F1784/7 only.

2: See ADCON0 register (Register 17-1) and ADCON2 register (Register 17-3) for detailed analog channel selection per device.

17.1 ADC Configuration

When configuring and using the ADC the following functions must be considered:

- Port configuration
- Channel selection
  - Single-ended
  - Differential
- ADC voltage reference selection
- ADC conversion clock source
- Interrupt control
- Result formatting

17.1.1 PORT CONFIGURATION

The ADC can be used to convert both analog and digital signals. When converting analog signals, the I/O pin should be configured for analog by setting the associated TRIS and ANSEL bits. Refer to **Section 13.0 "I/O Ports"** for more information.

Note:	Analog voltages on any pin that is defined as a digital input may cause the input buffer to conduct excess current.

17.1.2 CHANNEL SELECTION

There are up to 18 channel selections available:

- AN<13:8, 4:0> pins (PIC16(L)F1786 only)
- AN<21, 13:0> pins (PIC16(L)F1784/7 only)
- Temperature Indicator
- DAC_output
- FVR (Fixed Voltage Reference) Output

Refer to **Section 15.0 "Fixed Voltage Reference (FVR)"** and **Section 16.0 "Temperature Indicator Module"** for more information on these channel selections.

When converting differential signals, the negative input for the channel is selected with the CHSN<3:0> bits of the ADCON2 register. Any positive input can be paired with any negative input to determine the differential channel.

The CHS<4:0> bits of the ADCON0 register determine which positive channel is selected.

When CHSN<3:0> = `1111` then the ADC is effectively a single ended ADC converter.

When changing channels, a delay is required before starting the next conversion.

17.1.3 ADC VOLTAGE REFERENCE

The ADPREF bits of the ADCON1 register provide control of the positive voltage reference. The positive voltage reference can be:

- VREF+
- VDD
- FVR Buffer1

The ADNREF bits of the ADCON1 register provide control of the negative voltage reference. The negative voltage reference can be:

- VREF- pin
- VSS

See **Section 15.0 "Fixed Voltage Reference (FVR)"** for more details on the Fixed Voltage Reference.

17.1.4 CONVERSION CLOCK

The source of the conversion clock is software selectable via the ADCS bits of the ADCON1 register. There are seven possible clock options:

- FOSC/2
- FOSC/4
- FOSC/8
- FOSC/16
- FOSC/32
- FOSC/64
- FRC (dedicated internal FRC oscillator)

The time to complete one bit conversion is defined as TAD. One full 12-bit conversion requires 15 TAD periods as shown in Figure 17-2.

For correct conversion, the appropriate TAD specification must be met. Refer to the ADC conversion requirements in **Section 30.0 "Electrical Specifications"** for more information. Table 17-1 gives examples of appropriate ADC clock selections.

Note:	Unless using the FRC, any changes in the system clock frequency will change the ADC clock frequency, which may adversely affect the ADC result.

© 2012-2014 Microchip Technology Inc.

TABLE 17-1: ADC CLOCK PERIOD (TAD) VS. DEVICE OPERATING FREQUENCIES

ADC Clock Period (TAD)		Device Frequency (FOSC)					
ADC Clock Source	ADCS<2:0>	32 MHz	20 MHz	16 MHz	8 MHz	4 MHz	1 MHz
FOSC/2	000	62.5ns(2)	100 ns(2)	125 ns(2)	250 ns(2)	500 ns(2)	2.0 μs
FOSC/4	100	125 ns(2)	200 ns(2)	250 ns(2)	500 ns(2)	1.0 μs	4.0 μs
FOSC/8	001	0.5 μs(2)	400 ns(2)	0.5 μs(2)	1.0 μs	2.0 μs	8.0 μs(3)
FOSC/16	101	800 ns	800 ns	1.0 μs	2.0 μs	4.0 μs	16.0 μs(3)
FOSC/32	010	1.0 μs	1.6 μs	2.0 μs	4.0 μs	8.0 μs(3)	32.0 μs(3)
FOSC/64	110	2.0 μs	3.2 μs	4.0 μs	8.0 μs(3)	16.0 μs(3)	64.0 μs(3)
FRC	x11	1.0-6.0 μs(1,4)	1.0-6.0 μs(1,4)	1.0-6.0 μs(1,4)	1.0-6.0 μs(1,4)	1.0-6.0 μs(1,4)	1.0-6.0 μs(1,4)

Legend: Shaded cells are outside of recommended range.

Note 1: The FRC source has a typical TAD time of 1.6 μs for VDD.

2: These values violate the minimum required TAD time.

3: For faster conversion times, the selection of another clock source is recommended.

4: The ADC clock period (TAD) and total ADC conversion time can be minimized when the ADC clock is derived from the system clock FOSC. However, the FRC oscillator source must be used when conversions are to be performed with the device in Sleep mode.

FIGURE 17-2: ANALOG-TO-DIGITAL CONVERSION TAD CYCLES

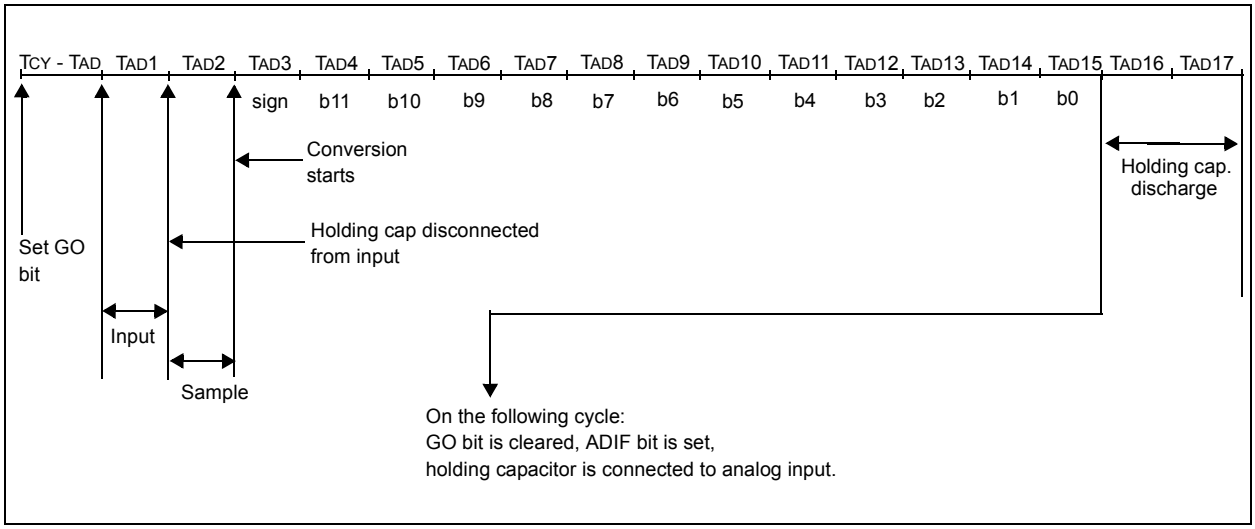

17.1.5 INTERRUPTS

The ADC module allows for the ability to generate an interrupt upon completion of an Analog-to-Digital conversion. The ADC Interrupt Flag is the ADIF bit in the PIR1 register. The ADC Interrupt Enable is the ADIE bit in the PIE1 register. The ADIF bit must be cleared in software.

> **Note 1:** The ADIF bit is set at the completion of every conversion, regardless of whether or not the ADC interrupt is enabled.
>
> **2:** The ADC operates during Sleep only when the FRC oscillator is selected.

This interrupt can be generated while the device is operating or while in Sleep. If the device is in Sleep, the interrupt will wake-up the device. Upon waking from Sleep, the next instruction following the SLEEP instruction is always executed. If the user is attempting to wake-up from Sleep and resume in-line code execution, the GIE and PEIE bits of the INTCON register must be disabled. If the GIE and PEIE bits of the INTCON register are enabled, execution will switch to the Interrupt Service Routine.

17.1.6 RESULT FORMATTING

The 10-bit and 12-bit ADC conversion results can be supplied in two formats: 2's complement or sign-magnitude. The ADFM bit of the ADCON1 register controls the output format. Sign magnitude is left justified with the sign bit in the LSb position. Negative numbers are indicated when the sign bit is '1'.

Two's complement is right justified with the sign extended into the Most Significant bits.

Figure 17-3 shows the two output formats. Table 17-2 shows conversion examples.

FIGURE 17-3: ADC CONVERSION RESULT FORMAT

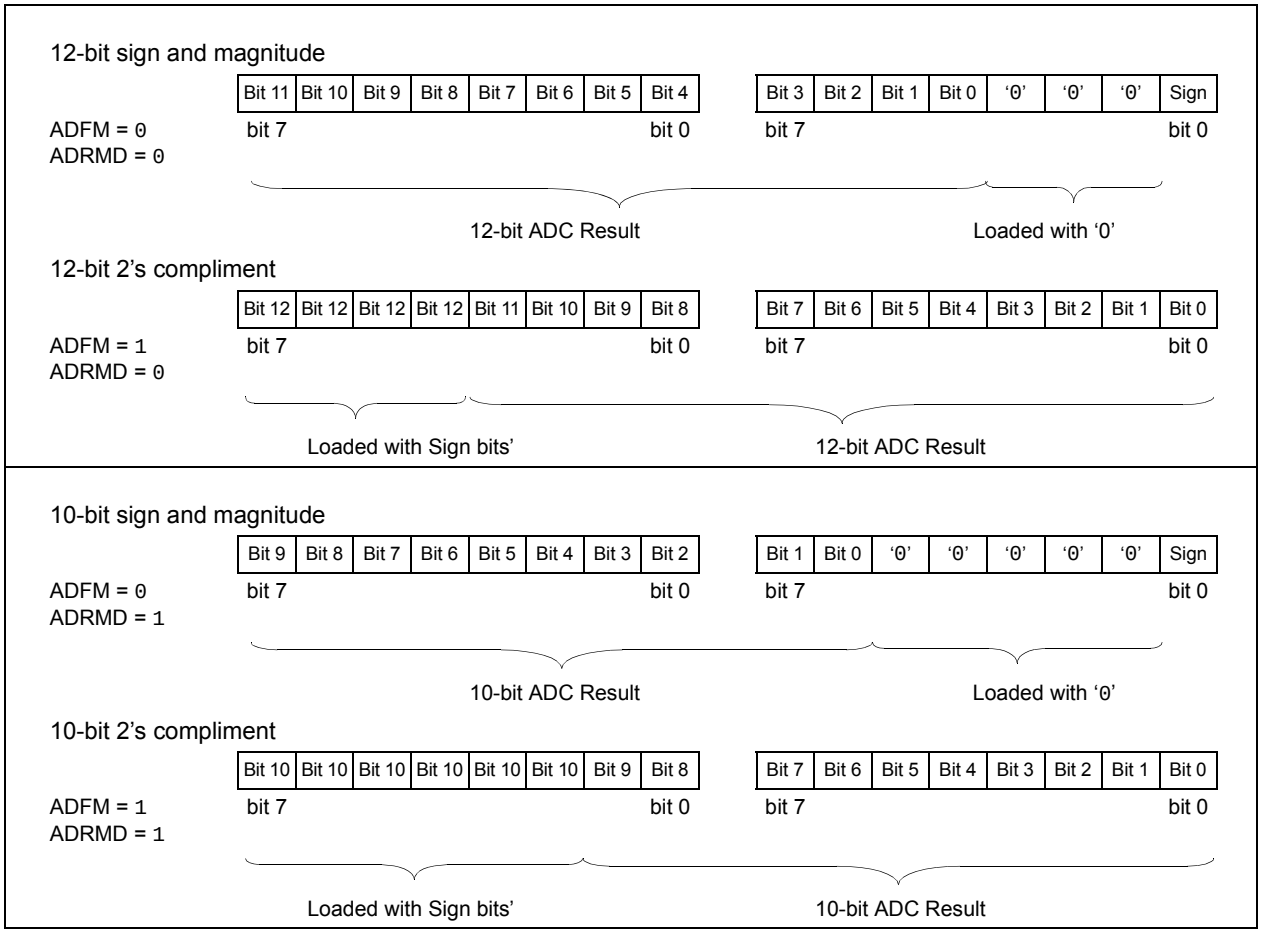

© 2012-2014 Microchip Technology Inc.

TABLE 17-2: ADC OUTPUT RESULTS FORMAT

Absolute ADC Value (decimal)	Sign and Magnitude Result ADFM = 0, ADRMD = 0		2's Compliment Result ADFM = 1, ADRMD = 0	
	ADRESH (ADRES<15:8>)	ADRESL (ADRES<7:0>)	ADRESH (ADRES<15:8>)	ADRESL (ADRES<7:0>)
+ 4095	1111 1111	1111 0000	0000 1111	1111 1111
+ 2355	1001 0011	0011 0000	0000 1001	0011 0011
+ 0001	0000 0000	0001 0000	0000 0000	0000 0001
0000	0000 0000	0000 0000	0000 0000	0000 0000
- 0001	0000 0000	0001 0001	1111 1111	1111 1111
- 4095	1111 1111	1111 0001	1111 0000	0000 0001
- 4096	0000 0000	0000 0001	1111 0000	0000 0000

Note 1: For the RSD ADC, the raw 13-bits from the ADC is presented in 2's compliment format, so no data translation is required for 2's compliment results.

2: For the SAR ADC, the raw 13-bits from the ADC is presented in sign and magnitude format, so no data translation is required for sign and magnitude results

17.2 ADC Operation

17.2.1 STARTING A CONVERSION

To enable the ADC module, the ADON bit of the ADCON0 register must be set to a '1'. Setting the GO/$\overline{\text{DONE}}$ bit of the ADCON0 register to a '1' will clear the ADRESH and ADRESL registers and start the Analog-to-Digital conversion.

Note:	The GO/$\overline{\text{DONE}}$ bit should not be set in the same instruction that turns on the ADC. Refer to **Section 17.2.6 "A/D Conversion Procedure"**.

17.2.2 COMPLETION OF A CONVERSION

When the conversion is complete, the ADC module will:

- Clear the GO/$\overline{\text{DONE}}$ bit
- Set the ADIF Interrupt Flag bit

17.2.3 TERMINATING A CONVERSION

When a conversion is terminated before completion by clearing the GO/$\overline{\text{DONE}}$ bit then the partial results are discarded and the results in the ADRESH and ADRESL registers from the previous conversion remain unchanged.

Note:	A device Reset forces all registers to their Reset state. Thus, the ADC module is turned off and any pending conversion is terminated.

17.2.4 ADC OPERATION DURING SLEEP

The ADC module can operate during Sleep. This requires the ADC clock source to be set to the FRC option. When the FRC oscillator source is selected, the ADC waits one additional instruction before starting the conversion. This allows the SLEEP instruction to be executed, which can reduce system noise during the conversion. If the ADC interrupt is enabled, the device will wake-up from Sleep when the conversion completes. If the ADC interrupt is disabled, the ADC module is turned off after the conversion completes, although the ADON bit remains set.

When the ADC clock source is something other than FRC, a SLEEP instruction causes the present conversion to be aborted and the ADC module is turned off, although the ADON bit remains set.

17.2.5 AUTO-CONVERSION TRIGGER

The Auto-conversion Trigger allows periodic ADC measurements without software intervention. When a rising edge of the selected source occurs, the GO/$\overline{\text{DONE}}$ bit is set by hardware.

The Auto-conversion Trigger source is selected with the TRIGSEL<3:0> bits of the ADCON2 register.

Using the Auto-conversion Trigger does not assure proper ADC timing. It is the user's responsibility to ensure that the ADC timing requirements are met.

Auto-conversion sources are:

- CCP1
- CCP2
- CCP3
- PSMC1(1)
- PSMC2(1)

Note:	The PSMC clock frequency, after the prescaler, must be less than FOSC/4 to ensure that the ADC detects the auto-conversion trigger. This limitation can be overcome by synchronizing a slave PSMC, running at the required slower clock frequency, to the first PSMC and triggering the conversion from the slave PSMC.

- PSMC3

© 2012-2014 Microchip Technology Inc.

17.2.6 A/D CONVERSION PROCEDURE

This is an example procedure for using the ADC to perform an Analog-to-Digital conversion:

1. Configure Port:
   - Disable pin output driver (Refer to the TRIS register)
   - Configure pin as analog (Refer to the ANSEL register)
2. Configure the ADC module:
   - Select ADC conversion clock
   - Configure voltage reference
   - Select ADC input channel
   - Turn on ADC module
3. Configure ADC interrupt (optional):
   - Clear ADC interrupt flag
   - Enable ADC interrupt
   - Enable peripheral interrupt
   - Enable global interrupt(1)
4. Wait the required acquisition time(2).
5. Start conversion by setting the GO/$\overline{\text{DONE}}$ bit.
6. Wait for ADC conversion to complete by one of the following:
   - Polling the GO/$\overline{\text{DONE}}$ bit
   - Waiting for the ADC interrupt (interrupts enabled)
7. Read ADC Result.
8. Clear the ADC interrupt flag (required if interrupt is enabled).

Note 1: The global interrupt can be disabled if the user is attempting to wake-up from Sleep and resume in-line code execution.

2: Refer to **Section 17.4 "ADC Acquisition Requirements"**.

EXAMPLE 17-1: A/D CONVERSION

```
;This code block configures the ADC
;for polling, Vdd and Vss references, Frc
;clock and AN0 input.
;
;Conversion start & polling for completion
; are included.
;
BANKSEL   ADCON1       ;
MOVLW     B'11110000'  ;2's complement, Frc
                       ;clock
MOVWF     ADCON1       ;Vdd and Vss Vref
MOVLW     B'00001111'  ;set negative input
MOVWF     ADCON2       ;to negative
                       ;reference
BANKSEL   TRISA        ;
BSF       TRISA,0      ;Set RA0 to input
BANKSEL   ANSEL        ;
BSF       ANSEL,0      ;Set RA0 to analog
BANKSEL   ADCON0       ;
MOVLW     B'00000001'  ;Select channel AN0
MOVWF     ADCON0       ;Turn ADC On
CALL      SampleTime   ;Acquisiton delay
BSF       ADCON0,ADGO  ;Start conversion
BTFSC     ADCON0,ADGO  ;Is conversion done?
GOTO      $-1          ;No, test again
BANKSEL   ADRESH       ;
MOVF      ADRESH,W     ;Read upper 2 bits
MOVWF     RESULTHI     ;store in GPR space
```

17.3 Register Definitions: ADC Control

REGISTER 17-1: ADCON0: ADC CONTROL REGISTER 0

R/W-0/0	R/W-0/0	R/W-0/0	R/W-0/0	R/W-0/0	R/W-0/0	R/W-0/0	R/W-0/0
ADRMD	CHS<4:0>					GO/$\overline{\text{DONE}}$	ADON
bit 7							bit 0

Legend:		
R = Readable bit	W = Writable bit	U = Unimplemented bit, read as ‘0’
u = Bit is unchanged	x = Bit is unknown	-n/n = Value at POR and BOR/Value at all other Resets
‘1’ = Bit is set	‘0’ = Bit is cleared	

bit 7 **ADRMD:** ADC Result Mode bit
1 = ADRESL and ADRESH provide data formatted for a 10-bit result
0 = ADRESL and ADRESH provide data formatted for a 12-bit result
See Figure 17-3 for details

bit 6-2 **CHS<4:0>:** Positive Differential Input Channel Select bits
11111 = FVR (Fixed Voltage Reference) Buffer 1 Output(3)
11110 = DAC_output(2)
11101 = Temperature Indicator(4)
11100 = Reserved. No channel connected.
•
•
•
10110 = Reserved. No channel connected
10101 = AN21(1)
10100 = Reserved. No channel connected
•
•
•
01110 = Reserved. No channel connected.
01101 = AN13
01100 = AN12
01011 = AN11
01010 = AN10
01001 = AN9
01000 = AN8
00111 = AN7(1)
00110 = AN6(1)
00101 = AN5(1)
00100 = AN4
00011 = AN3
00010 = AN2
00001 = AN1
00000 = AN0

bit 1 **GO/$\overline{\text{DONE}}$:** ADC Conversion Status bit
1 = ADC conversion cycle in progress. Setting this bit starts an ADC conversion cycle.
This bit is automatically cleared by hardware when the ADC conversion has completed.
0 = ADC conversion completed/not in progress

bit 0 **ADON:** ADC Enable bit
1 = ADC is enabled
0 = ADC is disabled and consumes no operating current

Note 1: PIC16(L)F1784/7 only.
2: See **Section 19.0 “Digital-to-Analog Converter (DAC) Module”** for more information.
3: See **Section 15.0 “Fixed Voltage Reference (FVR)”** for more information.
4: See **Section 16.0 “Temperature Indicator Module”** for more information.

© 2012-2014 Microchip Technology Inc.

REGISTER 17-2: ADCON1: ADC CONTROL REGISTER 1

R/W-0/0	R/W-0/0	R/W-0/0	R/W-0/0	U-0	R/W-0/0	R/W-0/0	R/W-0/0
ADFM	ADCS<2:0>			—	ADNREF	ADPREF<1:0>	
bit 7							bit 0

Legend:		
R = Readable bit	W = Writable bit	U = Unimplemented bit, read as ‘0’
u = Bit is unchanged	x = Bit is unknown	-n/n = Value at POR and BOR/Value at all other Resets
‘1’ = Bit is set	‘0’ = Bit is cleared	

bit 7 **ADFM:** ADC Result Format Select bit (see Figure 17-3)
`1` = 2’s complement format.
`0` = Sign-magnitude result format.

bit 6-4 **ADCS<2:0>:** ADC Conversion Clock Select bits
`111` = FRC (clock supplied from a dedicated FRC oscillator)
`110` = FOSC/64
`101` = FOSC/16
`100` = FOSC/4
`011` = FRC (clock supplied from a dedicated FRC oscillator)
`010` = FOSC/32
`001` = FOSC/8
`000` = FOSC/2

bit 3 **Unimplemented:** Read as ‘`0`’

bit 2 **ADNREF:** ADC Negative Voltage Reference Configuration bit
`1` = VREF- is connected to external VREF- pin(1)
`0` = VREF- is connected to VSS

bit 1-0 **ADPREF<1:0>:** ADC Positive Voltage Reference Configuration bits
`11` = VREF+ is connected internally to FVR Buffer 1
`10` = Reserved
`01` = VREF+ is connected to VREF+ pin
`00` = VREF+ is connected to VDD

Note 1: When selecting the FVR or VREF+ pin as the source of the positive reference, be aware that a minimum voltage specification exists. See **Section 30.0 “Electrical Specifications”** for details.

REGISTER 17-3: ADCON2: ADC CONTROL REGISTER 2

R/W-0/0	R/W-0/0	R/W-0/0	R/W-0/0	R/W-0/0	R/W-0/0	R/W-0/0	R/W-0/0
TRIGSEL<3:0>				CHSN<3:0>			
bit 7							bit 0

Legend:		
R = Readable bit	W = Writable bit	U = Unimplemented bit, read as ‘0’
u = Bit is unchanged	x = Bit is unknown	-n/n = Value at POR and BOR/Value at all other Resets
‘1’ = Bit is set	‘0’ = Bit is cleared	

bit 7-4 **TRIGSEL<3:0>:** ADC Auto-conversion Trigger Source Selection bits

1111 = Reserved. Auto-conversion Trigger disabled.
1110 = Reserved. Auto-conversion Trigger disabled.
1101 = Reserved. Auto-conversion Trigger disabled.
1100 = PSMC3 Falling Match Event(1)
1011 = PSMC3 Rising Edge Event(1)
1010 = PSMC3 Period Edge Event(1)
1001 = PSMC2 Falling Edge Event
1000 = PSMC2 Rising Edge Event
0111 = PSMC2 Period Match Event
0110 = PSMC1 Falling Edge Event
0101 = PSMC1 Rising Edge Event
0100 = PSMC1 Period Match Event
0011 = Reserved. Auto-conversion Trigger disabled.
0010 = CCP2, Auto-conversion Trigger
0001 = CCP1, Auto-conversion Trigger
0000 = Disabled

bit 3-0 **CHSN<3:0>:** Negative Differential Input Channel Select bits

When ADON = 0, all multiplexer inputs are disconnected.

1111 = ADC Negative reference - selected by ADNREF
1110 = AN21(1)
1101 = AN13
1100 = AN12
1011 = AN11
1010 = AN10
1001 = AN9
1000 = AN8
0111 = AN7(1)
0110 = AN6(1)
0101 = AN5(1)
0100 = AN4
0011 = AN3
0010 = AN2
0001 = AN1
0000 = AN0

Note 1: PIC16(L)F1784/7 only. For PIC16(L)F1786, “Reserved. No channel connected.”

© 2012-2014 Microchip Technology Inc.

REGISTER 17-4: ADRESH: ADC RESULT REGISTER HIGH (ADRESH) ADFM = 0

R/W-x/u	R/W-x/u	R/W-x/u	R/W-x/u	R/W-x/u	R/W-x/u	R/W-x/u	R/W-x/u
AD<11:4>							
bit 7							bit 0

Legend:		
R = Readable bit	W = Writable bit	U = Unimplemented bit, read as ‘0’
u = Bit is unchanged	x = Bit is unknown	-n/n = Value at POR and BOR/Value at all other Resets
‘1’ = Bit is set	‘0’ = Bit is cleared	

bit 7-0 **AD<11:4>**: ADC Result Register bits
Upper 8 bits of 12-bit conversion result

REGISTER 17-5: ADRESL: ADC RESULT REGISTER LOW (ADRESL) ADFM = 0

R/W-x/u	R/W-x/u	R/W-x/u	R/W-x/u	R/W-x/u	R/W-x/u	R/W-x/u	R/W-x/u
AD<3:0>				—	—	—	ADSIGN
bit 7							bit 0

Legend:		
R = Readable bit	W = Writable bit	U = Unimplemented bit, read as ‘0’
u = Bit is unchanged	x = Bit is unknown	-n/n = Value at POR and BOR/Value at all other Resets
‘1’ = Bit is set	‘0’ = Bit is cleared	

bit 7-4 **AD<3:0>**: ADC Result Register bits
Lower 4 bits of 12-bit conversion result

bit 3-1 **Extended LSb bits**: These are cleared to zero by DC conversion.

bit 0 **ADSIGN**: ADC Result Sign bit

REGISTER 17-6: ADRESH: ADC RESULT REGISTER HIGH (ADRESH) ADFM = 1

R/W-x/u	R/W-x/u	R/W-x/u	R/W-x/u	R/W-x/u	R/W-x/u	R/W-x/u	R/W-x/u
ADSIGN				AD<11:8>			
bit 7							bit 0

Legend:		
R = Readable bit	W = Writable bit	U = Unimplemented bit, read as ‘0’
u = Bit is unchanged	x = Bit is unknown	-n/n = Value at POR and BOR/Value at all other Resets
‘1’ = Bit is set	‘0’ = Bit is cleared	

bit 7-4 **ADSIGN**: Extended AD Result Sign bit

bit 3-0 **AD<11:8>**: ADC Result Register bits
Most Significant 4 bits of 12-bit conversion result

REGISTER 17-7: ADRESL: ADC RESULT REGISTER LOW (ADRESL) ADFM = 1

R/W-x/u	R/W-x/u	R/W-x/u	R/W-x/u	R/W-x/u	R/W-x/u	R/W-x/u	R/W-x/u
AD<7:0>							
bit 7							bit 0

Legend:		
R = Readable bit	W = Writable bit	U = Unimplemented bit, read as ‘0’
u = Bit is unchanged	x = Bit is unknown	-n/n = Value at POR and BOR/Value at all other Resets
‘1’ = Bit is set	‘0’ = Bit is cleared	

bit 7-0 **AD<7:0>**: ADC Result Register bits
Least Significant 8 bits of 12-bit conversion result

© 2012-2014 Microchip Technology Inc.

17.4 ADC Acquisition Requirements

For the ADC to meet its specified accuracy, the charge holding capacitor (CHOLD) must be allowed to fully charge to the input channel voltage level. The Analog Input model is shown in Figure 17-4. The source impedance (RS) and the internal sampling switch (RSS) impedance directly affect the time required to charge the capacitor CHOLD. The sampling switch (RSS) impedance varies over the device voltage (VDD), refer to Figure 17-4. **The maximum recommended impedance for analog sources is 10 kΩ.** As the source impedance is decreased, the acquisition time may be decreased. After the analog input channel is selected (or changed), an ADC acquisition must be done before the conversion can be started. To calculate the minimum acquisition time, Equation 17-1 may be used. This equation assumes that 1/2 LSb error is used (4,096 steps for the ADC). The 1/2 LSb error is the maximum error allowed for the ADC to meet its specified resolution.

EQUATION 17-1: ACQUISITION TIME EXAMPLE

Assumptions: *Temperature = 50°C and external impedance of 10kΩ 5.0V VDD*

$$\begin{aligned} T_{ACQ} &= \text{Amplifier Settling Time} + \text{Hold Capacitor Charging Time} + \text{Temperature Coefficient} \\ &= T_{AMP} + T_C + T_{COFF} \\ &= 2\mu s + T_C + [(\text{Temperature} - 25°C)(0.05\mu s/°C)] \end{aligned}$$

The value for TC can be approximated with the following equations:

$$V_{APPLIED}\left(1 - \frac{1}{(2^{n+1}) - 1}\right) = V_{CHOLD}$$ *;[1] VCHOLD charged to within 1/2 lsb*

$$V_{APPLIED}\left(1 - e^{\frac{-T_C}{RC}}\right) = V_{CHOLD}$$ *;[2] VCHOLD charge response to VAPPLIED*

$$V_{APPLIED}\left(1 - e^{\frac{-T_C}{RC}}\right) = V_{APPLIED}\left(1 - \frac{1}{(2^{n+1}) - 1}\right)$$ *;combining [1] and [2]*

Note: Where n = number of bits of the ADC.

Solving for TC:

$$\begin{aligned} T_C &= -C_{HOLD}(R_{IC} + R_{SS} + R_S)\ \ln(1/8191) \\ &= -10pF(1k\Omega + 7k\Omega + 10k\Omega)\ \ln(0.000122) \\ &= 1.62\mu s \end{aligned}$$

Therefore:

$$\begin{aligned} T_{ACQ} &= 2\mu s + 1.62\mu s + [(50°C - 25°C)(0.05\mu s/°C)] \\ &= 4.87\mu s \end{aligned}$$

Note 1: The reference voltage (VREF) has no effect on the equation, since it cancels itself out.

2: Maximum source impedance feeding the input pin should be considered so that the pin leakage does not cause a voltage divider, thereby limiting the absolute accuracy.

FIGURE 17-4: ANALOG INPUT MODEL

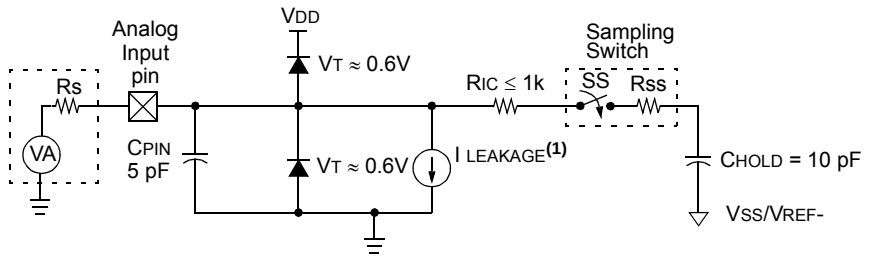

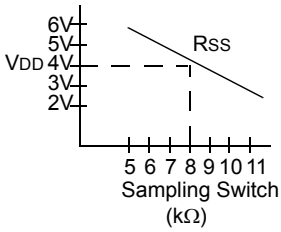

Legend:

CHOLD	= Sample/Hold Capacitance
CPIN	= Input Capacitance
I LEAKAGE	= Leakage current at the pin due to various junctions
RIC	= Interconnect Resistance
RSS	= Resistance of Sampling Switch
SS	= Sampling Switch
VT	= Threshold Voltage

Note 1: Refer to **Section 30.0 "Electrical Specifications"**.

FIGURE 17-5: ADC TRANSFER FUNCTION

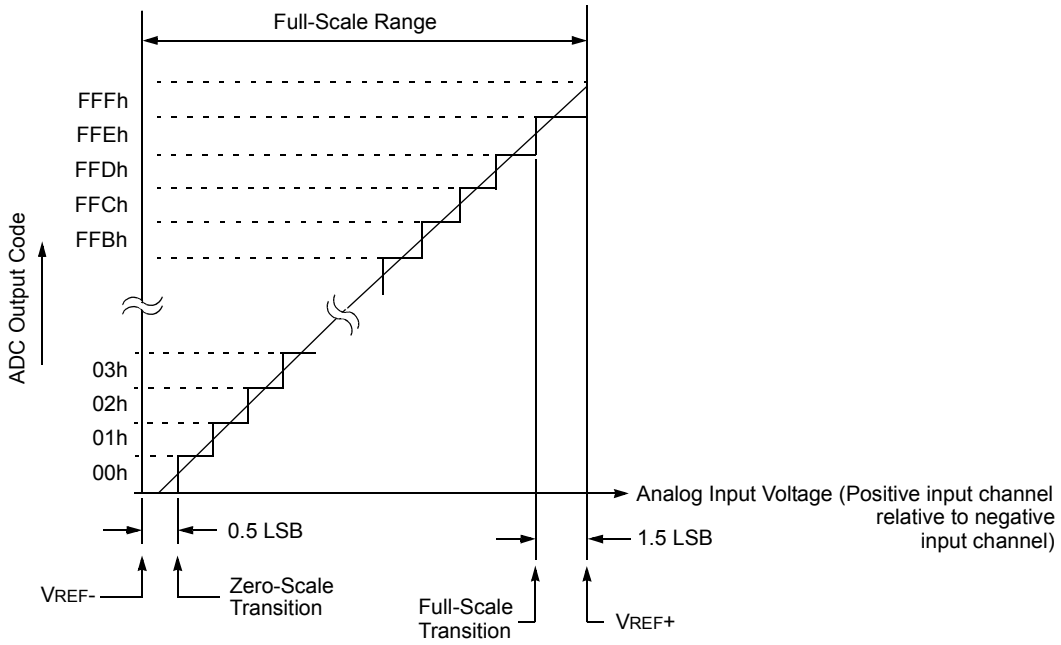

© 2012-2014 Microchip Technology Inc.

TABLE 17-3: SUMMARY OF REGISTERS ASSOCIATED WITH ADC

Name	Bit 7	Bit 6	Bit 5	Bit 4	Bit 3	Bit 2	Bit 1	Bit 0	Register on Page
ADCON0	ADRMD	CHS<4:0>					GO/$\overline{\text{DONE}}$	ADON	172
ADCON1	ADFM	ADCS<2:0>			—	ADNREF	ADPREF<1:0>		173
ADCON2	TRIGSEL<3:0>				CHSN<3:0>				174
ADRESH	A/D Result Register High								175, 176
ADRESL	A/D Result Register Low								175, 176
ANSELA	ANSA7	—	ANSA5	ANSA4	ANSA3	ANSA2	ANSA1	ANSA0	132
ANSELB	—	ANSB6	ANSB5	ANSB4	ANSB3	ANSB2	ANSB1	ANSB0	138
INTCON	GIE	PEIE	TMR0IE	INTE	IOCIE	TMR0IF	INTF	IOCIF	93
PIE1	TMR1GIE	ADIE	RCIE	TXIE	SSP1IE	CCP1IE	TMR2IE	TMR1IE	94
PIR1	TMR1GIF	ADIF	RCIF	TXIF	SSP1IF	CCP1IF	TMR2IF	TMR1IF	98
TRISA	TRISA7	TRISA6	TRISA5	TRISA4	TRISA3	TRISA2	TRISA1	TRISA0	131
TRISB	TRISB7	TRISB6	TRISB5	TRISB4	TRISB3	TRISB2	TRISB1	TRISB0	137
FVRCON	FVREN	FVRRDY	TSEN	TSRNG	CDAFVR<1:0>		ADFVR<1:0>		162

Legend: x = unknown, u = unchanged, – = unimplemented read as '0', q = value depends on condition. Shaded cells are not used for the ADC module.

18.0 OPERATIONAL AMPLIFIER (OPA) MODULES

The Operational Amplifier (OPA) is a standard three-terminal device requiring external feedback to operate. The OPA module has the following features:

- External connections to I/O ports
- Low leakage inputs
- Factory Calibrated Input Offset Voltage

FIGURE 18-1: OPAx MODULE BLOCK DIAGRAM

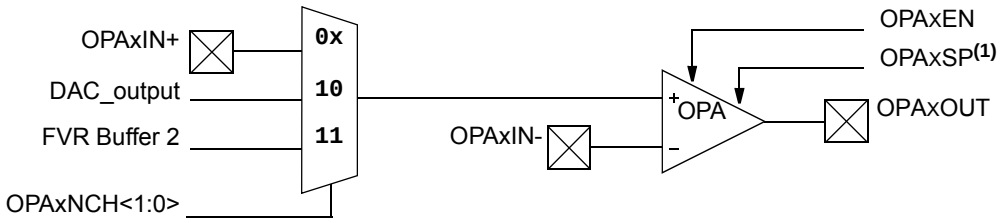

Note 1: The OPAxSP bit must be set to ‘1’. Low-Power mode is not supported.

© 2012-2014 Microchip Technology Inc.

18.1 Effects of Reset

A device Reset forces all registers to their Reset state. This disables the OPA module.

18.2 OPA Module Performance

Common AC and DC performance specifications for the OPA module:

- Common Mode Voltage Range
- Leakage Current
- Input Offset Voltage
- Open Loop Gain
- Gain Bandwidth Product

Common mode voltage range is the specified voltage range for the OPA+ and OPA- inputs, for which the OPA module will perform to within its specifications. The OPA module is designed to operate with input voltages between V_{SS} and V_{DD}. Behavior for Common mode voltages greater than V_{DD}, or below V_{SS}, are not guaranteed.

Leakage current is a measure of the small source or sink currents on the OPA+ and OPA- inputs. To minimize the effect of leakage currents, the effective impedances connected to the OPA+ and OPA- inputs should be kept as small as possible and equal.

Input offset voltage is a measure of the voltage difference between the OPA+ and OPA- inputs in a closed loop circuit with the OPA in its linear region. The offset voltage will appear as a DC offset in the output equal to the input offset voltage, multiplied by the gain of the circuit. The input offset voltage is also affected by the Common mode voltage. The OPA is factory calibrated to minimize the input offset voltage of the module.

Open loop gain is the ratio of the output voltage to the differential input voltage, (OPA+) - (OPA-). The gain is greatest at DC and falls off with frequency.

Gain Bandwidth Product or GBWP is the frequency at which the open loop gain falls off to 0 dB.

18.3 OPAxCON Control Register

The OPAxCON register, shown in Register 18-1, controls the OPA module.

The OPA module is enabled by setting the OPAxEN bit of the OPAxCON register. When enabled, the OPA forces the output driver of OPAxOUT pin into tri-state to prevent contention between the driver and the OPA output.

Note:	When the OPA module is enabled, the OPAxOUT pin is driven by the op amp output, not by the PORT digital driver. Refer to the Electrical specifications for the op amp output drive capability.

18.4 Register Definitions: Op Amp Control

REGISTER 18-1: OPAxCON: OPERATIONAL AMPLIFIERS (OPAx) CONTROL REGISTERS

R/W-0/0	R/W-0/0	U-0	U-0	U-0	U-0	R/W-0/0	R/W-0/0
OPAxEN	OPAxSP	—	—	—	—	OPAxCH<1:0>	
bit 7							bit 0

Legend:		
R = Readable bit	W = Writable bit	U = Unimplemented bit, read as ‘0’
u = Bit is unchanged	x = Bit is unknown	-n/n = Value at POR and BOR/Value at all other Resets
‘1’ = Bit is set	‘0’ = Bit is cleared	q = Value depends on condition

bit 7 **OPAxEN:** Op Amp Enable bit
`1` = Op amp is enabled
`0` = Op amp is disabled and consumes no active power

bit 6 **OPAxSP:** Op Amp Speed/Power Select bit
`1` = Comparator operates in high GBWP mode
`0` = Reserved. Do not use.

bit 5-2 **Unimplemented:** Read as ‘`0`’

bit 1-0 **OPAxCH<1:0>:** Non-inverting Channel Selection bits
`11` = Non-inverting input connects to FVR Buffer 2 output
`10` = Non-inverting input connects to DAC_output
`0x` = Non-inverting input connects to OPAxIN+ pin

TABLE 18-1: SUMMARY OF REGISTERS ASSOCIATED WITH OP AMPS

Name	Bit 7	Bit 6	Bit 5	Bit 4	Bit 3	Bit 2	Bit 1	Bit 0	Register on Page
ANSELA	ANSA7	—	ANSA5	ANSA4	ANSA3	ANSA2	ANSA1	ANSA0	132
ANSELB	—	ANSB6	ANSB5	ANSB4	ANSB3	ANSB2	ANSB1	ANSB0	138
DAC1CON0	DAC1EN	—	DAC1OE1	DAC1OE2	DAC1PSS<1:0>		—	DAC1NSS	186
DAC1CON1	DAC1R<7:0>								186
OPA1CON	OPA1EN	OPA1SP	—	—	—	—	OPA1PCH<1:0>		182
OPA2CON	OPA2EN	OPA2SP	—	—	—	—	OPA2PCH<1:0>		182
TRISA	TRISA7	TRISA6	TRISA5	TRISA4	TRISA3	TRISA2	TRISA1	TRISA0	131
TRISB	TRISB7	TRISB6	TRISB5	TRISB4	TRISB3	TRISB2	TRISB1	TRISB0	137
TRISC	TRISC7	TRISC6	TRISC5	TRISC4	TRISC3	TRISC2	TRISC1	TRISC0	142

Legend: — = unimplemented location, read as ‘`0`’. Shaded cells are not used by op amps.
Note 1: PIC16(L)F1784/7 only

© 2012-2014 Microchip Technology Inc.

19.0 DIGITAL-TO-ANALOG CONVERTER (DAC) MODULE

The Digital-to-Analog Converter supplies a variable voltage reference, ratiometric with the input source, with 256 selectable output levels.

The input of the DAC can be connected to:

- External VREF pins
- VDD supply voltage
- FVR (Fixed Voltage Reference)

The output of the DAC can be configured to supply a reference voltage to the following:

- Comparator positive input
- OpAmp positive input
- ADC input channel
- DAC1OUT1 pin
- DAC1OUT2 pin

The Digital-to-Analog Converter (DAC) is enabled by setting the DAC1EN bit of the DAC1CON0 register.

19.1 Output Voltage Selection

The DAC has 256 voltage level ranges. The 256 levels are set with the DAC1R<7:0> bits of the DAC1CON1 register.

The DAC output voltage is determined by Equation 19-1:

EQUATION 19-1: DAC OUTPUT VOLTAGE

IF DACxEN = 1

$$V_{OUT} = \left((V_{SOURCE+} - V_{SOURCE-}) \times \frac{DACxR[7:0]}{2^8} \right) + V_{SOURCE-}$$

$V_{SOURCE+} = V_{DD}, V_{REF}$, *or FVR BUFFER 2*

$V_{SOURCE-} = V_{SS}$

19.2 Ratiometric Output Level

The DAC output value is derived using a resistor ladder with each end of the ladder tied to a positive and negative voltage reference input source. If the voltage of either input source fluctuates, a similar fluctuation will result in the DAC output value.

The value of the individual resistors within the ladder can be found in **Section 30.0 "Electrical Specifications"**.

19.3 DAC Voltage Reference Output

The DAC voltage can be output to the DAC1OUT1 and DAC1OUT2 pins by setting the respective DAC1OE1 and DAC1OE2 pins of the DAC1CON0 register. Selecting the DAC reference voltage for output on either DAC1OUTx pin automatically overrides the digital output buffer and digital input threshold detector functions of that pin. Reading the DAC1OUTx pin when it has been configured for DAC reference voltage output will always return a '0'.

Due to the limited current drive capability, a buffer must be used on the DAC voltage reference output for external connections to either DAC1OUTx pin. Figure 19-2 shows an example buffering technique.

FIGURE 19-1: DIGITAL-TO-ANALOG CONVERTER BLOCK DIAGRAM

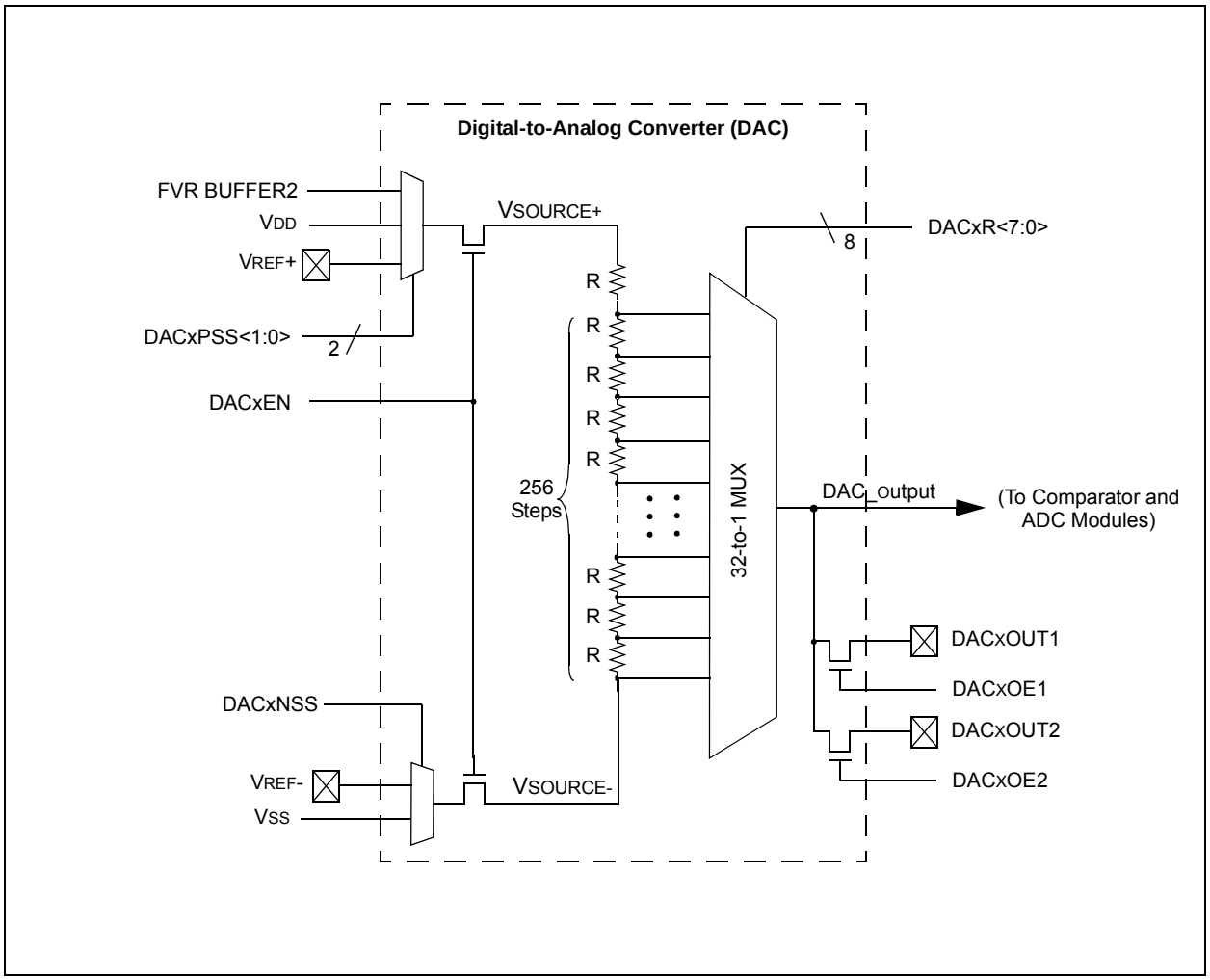

FIGURE 19-2: VOLTAGE REFERENCE OUTPUT BUFFER EXAMPLE

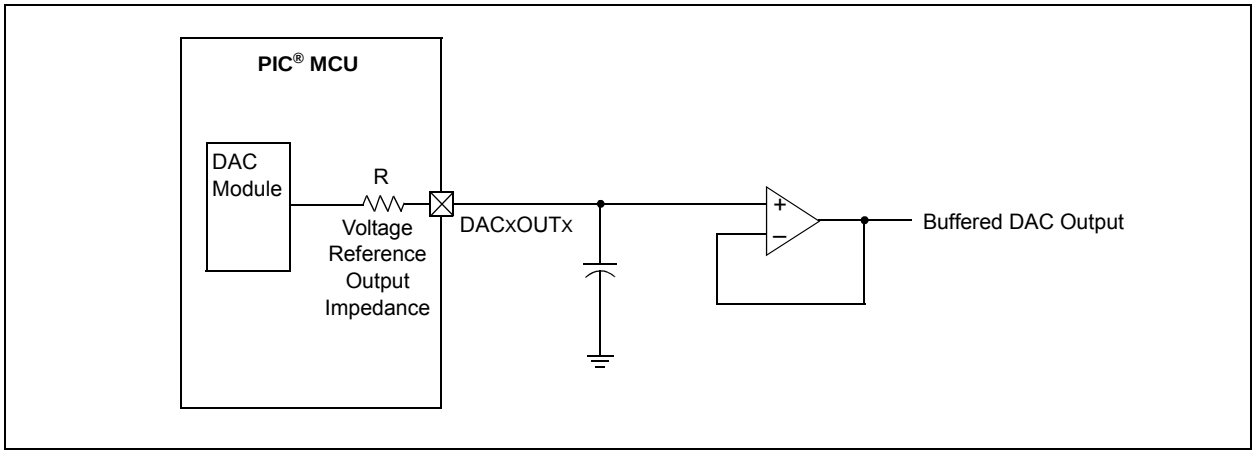

© 2012-2014 Microchip Technology Inc.

19.4 Operation During Sleep

When the device wakes up from Sleep through an interrupt or a Watchdog Timer time-out, the contents of the DAC1CON0 register are not affected. To minimize current consumption in Sleep mode, the voltage reference should be disabled.

19.5 Effects of a Reset

A device Reset affects the following:

- DAC is disabled.
- DAC output voltage is removed from the DAC1OUT pin.
- The DAC1R<7:0> range select bits are cleared.

19.6 Register Definitions: DAC Control

REGISTER 19-1: DAC1CON0: VOLTAGE REFERENCE CONTROL REGISTER 0

R/W-0/0	U-0	R/W-0/0	R/W-0/0	R/W-0/0	R/W-0/0	U-0	R/W-0/0
DAC1EN	—	DAC1OE1	DAC1OE2	DAC1PSS<1:0>		—	DAC1NSS
bit 7							bit 0

Legend:		
R = Readable bit	W = Writable bit	U = Unimplemented bit, read as ‘0’
u = Bit is unchanged	x = Bit is unknown	-n/n = Value at POR and BOR/Value at all other Resets
‘1’ = Bit is set	‘0’ = Bit is cleared	

bit 7 **DAC1EN:** DAC1 Enable bit
`1` = DAC1 is enabled
`0` = DAC1 is disabled

bit 6 **Unimplemented:** Read as ‘`0`’

bit 5 **DAC1OE1:** DAC1 Voltage Output 1 Enable bit
`1` = DAC1 voltage level is also an output on the DAC1OUT1 pin
`0` = DAC1 voltage level is disconnected from the DAC1OUT1 pin

bit 4 **DAC1OE2:** DAC1 Voltage Output 2 Enable bit
`1` = DAC1 voltage level is also an output on the DAC1OUT2 pin
`0` = DAC1 voltage level is disconnected from the DAC1OUT2 pin

bit 3-2 **DAC1PSS<1:0>:** DAC1 Positive Source Select bits
`11` = Reserved, do not use
`10` = FVR Buffer2 output
`01` = V_{REF}+ pin
`00` = V_{DD}

bit 1 **Unimplemented:** Read as ‘`0`’

bit 0 **DAC1NSS:** DAC1 Negative Source Select bits
`1` = V_{REF}- pin
`0` = V_{SS}

REGISTER 19-2: DAC1CON1: VOLTAGE REFERENCE CONTROL REGISTER 1

R/W-0/0	R/W-0/0	R/W-0/0	R/W-0/0	R/W-0/0	R/W-0/0	R/W-0/0	R/W-0/0
DAC1R<7:0>							
bit 7							bit 0

Legend:		
R = Readable bit	W = Writable bit	U = Unimplemented bit, read as ‘0’
u = Bit is unchanged	x = Bit is unknown	-n/n = Value at POR and BOR/Value at all other Resets
‘1’ = Bit is set	‘0’ = Bit is cleared	

bit 7-0 **DAC1R<7:0>:** DAC1 Voltage Output Select bits

TABLE 19-1: SUMMARY OF REGISTERS ASSOCIATED WITH THE DAC MODULE

Name	Bit 7	Bit 6	Bit 5	Bit 4	Bit 3	Bit 2	Bit 1	Bit 0	Register on page
FVRCON	FVREN	FVRRDY	TSEN	TSRNG	CDAFVR<1:0>		ADFVR<1:0>		162
DAC1CON0	DAC1EN	—	DAC1OE1	DAC1OE2	DAC1PSS<1:0>		—	DAC1NSS	186
DAC1CON1	DAC1R<7:0>								186

Legend: — = Unimplemented location, read as ‘`0`’. Shaded cells are not used with the DAC module.

© 2012-2014 Microchip Technology Inc.

20.0 COMPARATOR MODULE

Comparators are used to interface analog circuits to a digital circuit by comparing two analog voltages and providing a digital indication of their relative magnitudes. Comparators are very useful mixed signal building blocks because they provide analog functionality independent of program execution. The analog comparator module includes the following features:

- Independent comparator control
- Programmable input selection
- Comparator output is available internally/externally
- Programmable output polarity
- Interrupt-on-change
- Wake-up from Sleep
- Programmable Speed/Power optimization
- PWM shutdown
- Programmable and fixed voltage reference

20.1 Comparator Overview

A single comparator is shown in Figure 20-1 along with the relationship between the analog input levels and the digital output. When the analog voltage at VIN+ is less than the analog voltage at VIN-, the output of the comparator is a digital low level. When the analog voltage at VIN+ is greater than the analog voltage at VIN-, the output of the comparator is a digital high level.

The comparators available for this device are located in Table 20-1.

TABLE 20-1: COMPARATOR AVAILABILITY PER DEVICE

Device	C1	C2	C3	C4
PIC16(L)F1784/6/7	●	●	●	●

FIGURE 20-1: SINGLE COMPARATOR

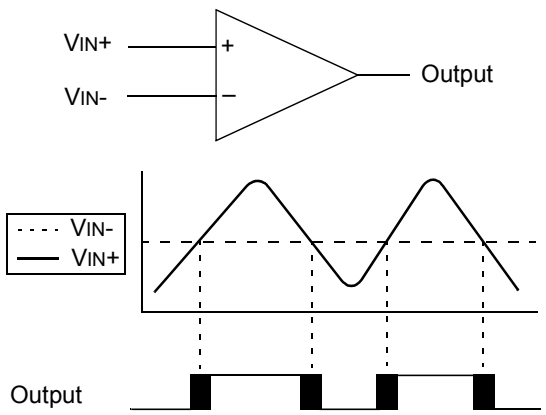

Note: The black areas of the output of the comparator represents the uncertainty due to input offsets and response time.

FIGURE 20-2: COMPARATOR MODULE SIMPLIFIED BLOCK DIAGRAM

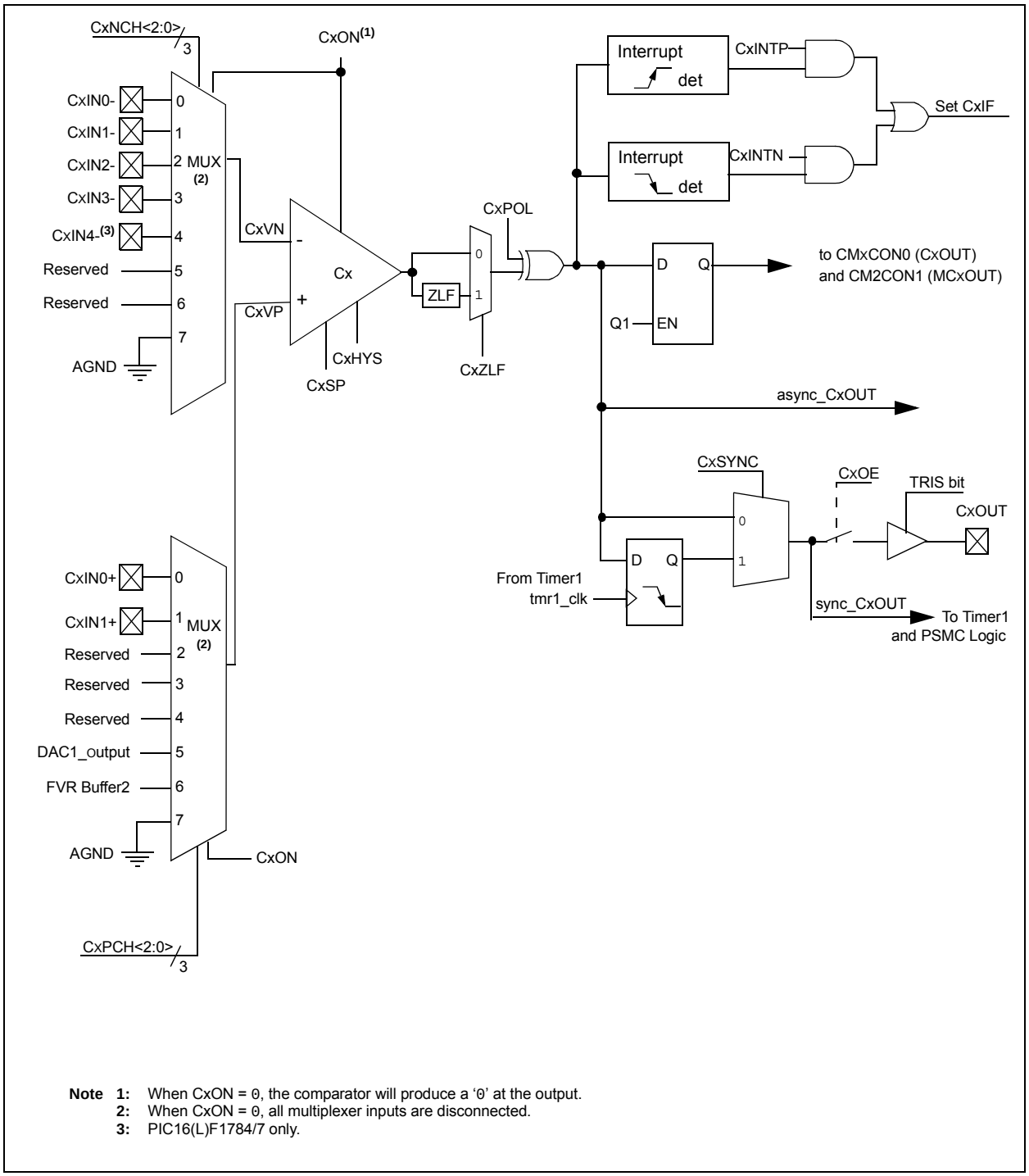

Note 1: When CxON = 0, the comparator will produce a '0' at the output.
2: When CxON = 0, all multiplexer inputs are disconnected.
3: PIC16(L)F1784/7 only.

© 2012-2014 Microchip Technology Inc.

20.2 Comparator Control

Each comparator has two control registers: CMxCON0 and CMxCON1.

The CMxCON0 register (see Register 20-1) contains Control and Status bits for the following:

- Enable
- Output selection
- Output polarity
- Speed/Power selection
- Hysteresis enable
- Output synchronization

The CMxCON1 register (see Register 20-2) contains Control bits for the following:

- Interrupt enable
- Interrupt edge polarity
- Positive input channel selection
- Negative input channel selection

20.2.1 COMPARATOR ENABLE

Setting the CxON bit of the CMxCON0 register enables the comparator for operation. Clearing the CxON bit disables the comparator resulting in minimum current consumption.

20.2.2 COMPARATOR OUTPUT SELECTION

The output of the comparator can be monitored by reading either the CxOUT bit of the CMxCON0 register or the MCxOUT bit of the CMOUT register. In order to make the output available for an external connection, the following conditions must be true:

- CxOE bit of the CMxCON0 register must be set
- Corresponding TRIS bit must be cleared
- CxON bit of the CMxCON0 register must be set

Note 1: The CxOE bit of the CMxCON0 register overrides the PORT data latch. Setting the CxON bit of the CMxCON0 register has no impact on the port override.

2: The internal output of the comparator is latched with each instruction cycle. Unless otherwise specified, external outputs are not latched.

20.2.3 COMPARATOR OUTPUT POLARITY

Inverting the output of the comparator is functionally equivalent to swapping the comparator inputs. The polarity of the comparator output can be inverted by setting the CxPOL bit of the CMxCON0 register. Clearing the CxPOL bit results in a non-inverted output.

Table 20-2 shows the output state versus input conditions, including polarity control.

TABLE 20-2: COMPARATOR OUTPUT STATE VS. INPUT CONDITIONS

Input Condition	CxPOL	CxOUT
CxVN > CxVP	0	0
CxVN < CxVP	0	1
CxVN > CxVP	1	1
CxVN < CxVP	1	0

20.2.4 COMPARATOR SPEED/POWER SELECTION

The trade-off between speed or power can be optimized during program execution with the CxSP control bit. The default state for this bit is ‘1’ which selects the normal speed mode. Device power consumption can be optimized at the cost of slower comparator propagation delay by clearing the CxSP bit to ‘0’.

20.3 Comparator Hysteresis

A selectable amount of separation voltage can be added to the input pins of each comparator to provide a hysteresis function to the overall operation. Hysteresis is enabled by setting the CxHYS bit of the CMxCON0 register.

See **Section 30.0 "Electrical Specifications"** for more information.

20.4 Timer1 Gate Operation

The output resulting from a comparator operation can be used as a source for gate control of Timer1. See **Section 22.6 "Timer1 Gate"** for more information. This feature is useful for timing the duration or interval of an analog event.

It is recommended that the comparator output be synchronized to Timer1. This ensures that Timer1 does not increment while a change in the comparator is occurring.

20.4.1 COMPARATOR OUTPUT SYNCHRONIZATION

The output from a comparator can be synchronized with Timer1 by setting the CxSYNC bit of the CMx-CON0 register.

Once enabled, the comparator output is latched on the falling edge of the Timer1 source clock. If a prescaler is used with Timer1, the comparator output is latched after the prescaling function. To prevent a race condition, the comparator output is latched on the falling edge of the Timer1 clock source and Timer1 increments on the rising edge of its clock source. See the Comparator Block Diagram (Figure 20-2) and the Timer1 Block Diagram (Figure 22-1) for more information.

20.5 Comparator Interrupt

An interrupt can be generated upon a change in the output value of the comparator for each comparator, a rising edge detector and a falling edge detector are present.

When either edge detector is triggered and its associated enable bit is set (CxINTP and/or CxINTN bits of the CMxCON1 register), the Corresponding Interrupt Flag bit (CxIF bit of the PIR2 register) will be set.

To enable the interrupt, you must set the following bits:

- CxON, CxPOL and CxSP bits of the CMxCON0 register
- CxIE bit of the PIE2 register
- CxINTP bit of the CMxCON1 register (for a rising edge detection)
- CxINTN bit of the CMxCON1 register (for a falling edge detection)
- PEIE and GIE bits of the INTCON register

The associated interrupt flag bit, CxIF bit of the PIR2 register, must be cleared in software. If another edge is detected while this flag is being cleared, the flag will still be set at the end of the sequence.

Note:	Although a comparator is disabled, an interrupt can be generated by changing the output polarity with the CxPOL bit of the CMxCON0 register, or by switching the comparator on or off with the CxON bit of the CMxCON0 register.

20.6 Comparator Positive Input Selection

Configuring the CxPCH<2:0> bits of the CMxCON1 register directs an internal voltage reference or an analog pin to the non-inverting input of the comparator:

- CxIN+ analog pin
- DAC output
- FVR (Fixed Voltage Reference)
- VSS (Ground)

See **Section 15.0 "Fixed Voltage Reference (FVR)"** for more information on the Fixed Voltage Reference module.

See **Section 19.0 "Digital-to-Analog Converter (DAC) Module"** for more information on the DAC input signal.

Any time the comparator is disabled (CxON = 0), all comparator inputs are disabled.

© 2012-2014 Microchip Technology Inc.

20.7 Comparator Negative Input Selection

The CxNCH<2:0> bits of the CMxCON0 register direct an analog input pin or analog ground to the inverting input of the comparator:

- CxIN- pin
- Analog Ground

Some inverting input selections share a pin with the operational amplifier output function. Enabling both functions at the same time will direct the operational amplifier output to the comparator inverting input.

Note:	To use CxINy+ and CxINy- pins as analog input, the appropriate bits must be set in the ANSEL register and the corresponding TRIS bits must also be set to disable the output drivers.

20.8 Comparator Response Time

The comparator output is indeterminate for a period of time after the change of an input source or the selection of a new reference voltage. This period is referred to as the response time. The response time of the comparator differs from the settling time of the voltage reference. Therefore, both of these times must be considered when determining the total response time to a comparator input change. See the Comparator and Voltage Reference Specifications in **Section 30.0 "Electrical Specifications"** for more details.

20.9 Zero Latency Filter

In high-speed operation, and under proper circuit conditions, it is possible for the comparator output to oscillate. This oscillation can have adverse effects on the hardware and software relying on this signal. Therefore, a digital filter has been added to the comparator output to suppress the comparator output oscillation. Once the comparator output changes, the output is prevented from reversing the change for a nominal time of 20 ns. This allows the comparator output to stabilize without affecting other dependent devices. Refer to Figure 20-3.

FIGURE 20-3: COMPARATOR ZERO LATENCY FILTER OPERATION

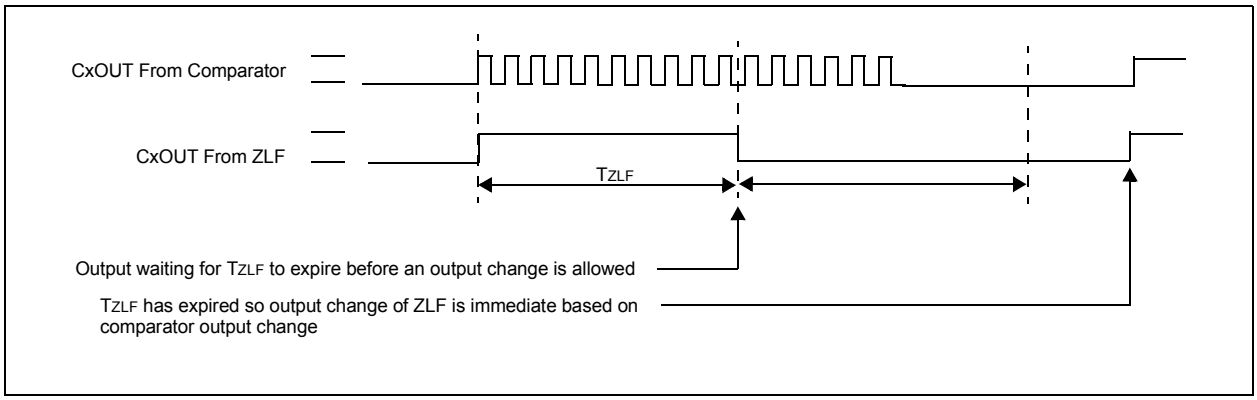

20.10 Analog Input Connection Considerations

A simplified circuit for an analog input is shown in Figure 20-4. Since the analog input pins share their connection with a digital input, they have reverse biased ESD protection diodes to VDD and VSS. The analog input, therefore, must be between VSS and VDD. If the input voltage deviates from this range by more than 0.6V in either direction, one of the diodes is forward biased and a latch-up may occur.

A maximum source impedance of 10 kΩ is recommended for the analog sources. Also, any external component connected to an analog input pin, such as a capacitor or a Zener diode, should have very little leakage current to minimize inaccuracies introduced.

Note 1: When reading a PORT register, all pins configured as analog inputs will read as a '0'. Pins configured as digital inputs will convert as an analog input, according to the input specification.

2: Analog levels on any pin defined as a digital input, may cause the input buffer to consume more current than is specified.

20.10.1 ALTERNATE PIN LOCATIONS

This module incorporates I/O pins that can be moved to other locations with the use of the alternate pin function register APFCON. To determine which pins can be moved and what their default locations are upon a Reset, see **Section 13.1 "Alternate Pin Function"** for more information.

FIGURE 20-4: ANALOG INPUT MODEL

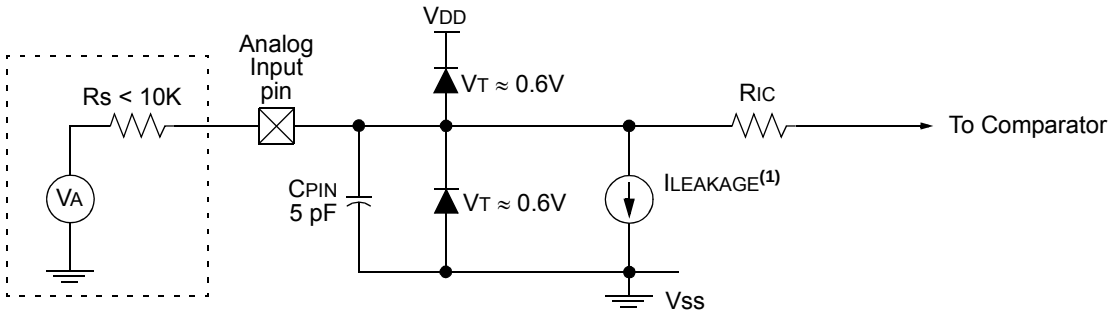

Legend: CPIN = Input Capacitance
ILEAKAGE = Leakage Current at the pin due to various junctions
RIC = Interconnect Resistance
RS = Source Impedance
VA = Analog Voltage
VT = Threshold Voltage

Note 1: See **Section 30.0 "Electrical Specifications"**

© 2012-2014 Microchip Technology Inc.

20.11 Register Definitions: Comparator Control

REGISTER 20-1: CMxCON0: COMPARATOR Cx CONTROL REGISTER 0

R/W-0/0	R-0/0	R/W-0/0	R/W-0/0	R/W-0/0	R/W-1/1	R/W-0/0	R/W-0/0
CxON	CxOUT	CxOE	CxPOL	CxZLF	CxSP	CxHYS	CxSYNC
bit 7							bit 0

Legend:		
R = Readable bit	W = Writable bit	U = Unimplemented bit, read as ‘0’
u = Bit is unchanged	x = Bit is unknown	-n/n = Value at POR and BOR/Value at all other Resets
‘1’ = Bit is set	‘0’ = Bit is cleared	

bit 7 **CxON:** Comparator Enable bit
1 = Comparator is enabled
0 = Comparator is disabled and consumes no active power

bit 6 **CxOUT:** Comparator Output bit
If CxPOL = 1 (inverted polarity):
1 = CxVP < CxVN
0 = CxVP > CxVN
If CxPOL = 0 (non-inverted polarity):
1 = CxVP > CxVN
0 = CxVP < CxVN

bit 5 **CxOE:** Comparator Output Enable bit
1 = CxOUT is present on the CxOUT pin. Requires that the associated TRIS bit be cleared to actually drive the pin. Not affected by CxON.
0 = CxOUT is internal only

bit 4 **CxPOL:** Comparator Output Polarity Select bit
1 = Comparator output is inverted
0 = Comparator output is not inverted

bit 3 **CxZLF:** Comparator Zero Latency Filter Enable bit
1 = Comparator output is filtered
0 = Comparator output is unfiltered

bit 2 **CxSP:** Comparator Speed/Power Select bit
1 = Comparator operates in normal power, higher speed mode
0 = Comparator operates in low-power, low-speed mode

bit 1 **CxHYS:** Comparator Hysteresis Enable bit
1 = Comparator hysteresis enabled
0 = Comparator hysteresis disabled

bit 0 **CxSYNC:** Comparator Output Synchronous Mode bit
1 = Comparator output to Timer1 and I/O pin is synchronous to changes on Timer1 clock source. Output updated on the falling edge of Timer1 clock source.
0 = Comparator output to Timer1 and I/O pin is asynchronous.

REGISTER 20-2: CMxCON1: COMPARATOR Cx CONTROL REGISTER 1

R/W-0/0	R/W-0/0	R/W-0/0	R/W-0/0	R/W-0/0	R/W-0/0	R/W-0/0	R/W-0/0
CxINTP	CxINTN	CxPCH<2:0>			CxNCH<2:0>		
bit 7							bit 0

Legend:		
R = Readable bit	W = Writable bit	U = Unimplemented bit, read as ‘0’
u = Bit is unchanged	x = Bit is unknown	-n/n = Value at POR and BOR/Value at all other Resets
‘1’ = Bit is set	‘0’ = Bit is cleared	

bit 7 **CxINTP:** Comparator Interrupt on Positive Going Edge Enable bits
1 = The CxIF interrupt flag will be set upon a positive going edge of the CxOUT bit
0 = No interrupt flag will be set on a positive going edge of the CxOUT bit

bit 6 **CxINTN:** Comparator Interrupt on Negative Going Edge Enable bits
1 = The CxIF interrupt flag will be set upon a negative going edge of the CxOUT bit
0 = No interrupt flag will be set on a negative going edge of the CxOUT bit

bit 5-3 **CxPCH<2:0>:** Comparator Positive Input Channel Select bits
111 = CxVP connects to AGND
110 = CxVP connects to FVR Buffer 2
101 = CxVP connects to DAC1_output
100 = CxVP unconnected, input floating
011 = CxVP unconnected, input floating
010 = CxVP unconnected, input floating
001 = CxVP connects to CxIN1+ pin
000 = CxVP connects to CxIN0+ pin

bit 2-0 **CxNCH<2:0>:** Comparator Negative Input Channel Select bits
111 = CxVN connects to AGND
110 = CxVN unconnected, input floating
101 = Reserved, input floating
100 = CxVN connects to CxIN4- pin(2)
011 = CxVN connects to CxIN3- pin
010 = CxVN connects to CxIN2- pin
001 = CxVN connects to CxIN1- pin
000 = CxVN connects to CxIN0- pin

Note 1: PIC16(L)F1784/7 only.
2: “Reserved, input floating” for PIC16(L)F1786 only.

© 2012-2014 Microchip Technology Inc.

REGISTER 20-3: CMOUT: COMPARATOR OUTPUT REGISTER

U-0	U-0	U-0	U-0	R-0/0	R-0/0	R-0/0	R-0/0
—	—	—	—	MC4OUT(1)	MC3OUT	MC2OUT	MC1OUT
bit 7							bit 0

Legend:		
R = Readable bit	W = Writable bit	U = Unimplemented bit, read as ‘0’
u = Bit is unchanged	x = Bit is unknown	-n/n = Value at POR and BOR/Value at all other Resets
‘1’ = Bit is set	‘0’ = Bit is cleared	

bit 7-4 **Unimplemented:** Read as ‘0’

bit 3 **MC4OUT:** Mirror Copy of C4OUT bit(1)

bit 2 **MC3OUT:** Mirror Copy of C3OUT bit

bit 1 **MC2OUT:** Mirror Copy of C2OUT bit

bit 0 **MC1OUT:** Mirror Copy of C1OUT bit

Note 1: PIC16(L)F1784/7 only.

TABLE 20-3: SUMMARY OF REGISTERS ASSOCIATED WITH COMPARATOR MODULE

Name	Bit 7	Bit 6	Bit 5	Bit 4	Bit 3	Bit 2	Bit 1	Bit 0	Register on Page
ANSELA	ANSA7	—	ANSA5	ANSA4	ANSA3	ANSA2	ANSA1	ANSA0	132
ANSELB	—	ANSB6	ANSB5	ANSB4	ANSB3	ANSB2	ANSB1	ANSB0	138
CM1CON0	C1ON	C1OUT	C1OE	C1POL	C1ZLF	C1SP	C1HYS	C1SYNC	193
CM2CON0	C2ON	C2OUT	C2OE	C2POL	C2ZLF	C2SP	C2HYS	C2SYNC	193
CM1CON1	C1NTP	C1INTN	C1PCH<2:0>			C1NCH<2:0>			194
CM2CON1	C2NTP	C2INTN	C2PCH<2:0>			C2NCH<2:0>			194
CM3CON0	C3ON	C3OUT	C3OE	C3POL	C3ZLF	C3SP	C3HYS	C3SYNC	193
CM3CON1	C3INTP	C3INTN	C3PCH<2:0>			C3NCH<2:0>			194
CMOUT	—	—	—	—	MC4OUT(1)	MC3OUT	MC2OUT	MC1OUT	195
FVRCON	FVREN	FVRRDY	TSEN	TSRNG	CDAFVR<1:0>		ADFVR<1:0>		162
DAC1CON0	DAC1EN	—	DAC1OE1	DAC1OE2	DAC1PSS<1:0>		—	DAC1NSS	186
DAC1CON1	DAC1R<7:0>								186
INTCON	GIE	PEIE	TMR0IE	INTE	IOCIE	TMR0IF	INTF	IOCIF	93
PIE2	OSFIE	C2IE	C1IE	EEIE	BCL1IE	C4IE	C3IE	CCP2IE	95
PIR2	OSFIF	C2IF	C1IF	EEIF	BCL1IF	C4IF	C3IF	CCP2IF	99
TRISA	TRISA7	TRISA6	TRISA5	TRISA4	TRISA3	TRISA2	TRISA1	TRISA0	132
TRISB	TRISB7	TRISB6	TRISB5	TRISB4	TRISB3	TRISB2	TRISB1	TRISB0	138
TRISC	TRISC7	TRISC6	TRISC5	TRISC4	TRISC3	TRISC2	TRISC1	TRISC0	142

Legend: — = unimplemented location, read as ‘0’. Shaded cells are unused by the comparator module.
Note 1: PIC16(L)F1784/7 only.

21.0 TIMER0 MODULE

The Timer0 module is an 8-bit timer/counter with the following features:

- 8-bit timer/counter register (TMR0)
- 8-bit prescaler (independent of Watchdog Timer)
- Programmable internal or external clock source
- Programmable external clock edge selection
- Interrupt on overflow
- TMR0 can be used to gate Timer1

Figure 21-1 is a block diagram of the Timer0 module.

21.1 Timer0 Operation

The Timer0 module can be used as either an 8-bit timer or an 8-bit counter.

21.1.1 8-BIT TIMER MODE

The Timer0 module will increment every instruction cycle, if used without a prescaler. 8-bit Timer mode is selected by clearing the TMR0CS bit of the OPTION_REG register.

When TMR0 is written, the increment is inhibited for two instruction cycles immediately following the write.

Note:	The value written to the TMR0 register can be adjusted, in order to account for the two instruction cycle delay when TMR0 is written.

21.1.2 8-BIT COUNTER MODE

In 8-Bit Counter mode, the Timer0 module will increment on every rising or falling edge of the T0CKI pin.

8-Bit Counter mode using the T0CKI pin is selected by setting the TMR0CS bit in the OPTION_REG register to '1'.

The rising or falling transition of the incrementing edge for either input source is determined by the TMR0SE bit in the OPTION_REG register.

FIGURE 21-1: BLOCK DIAGRAM OF THE TIMER0

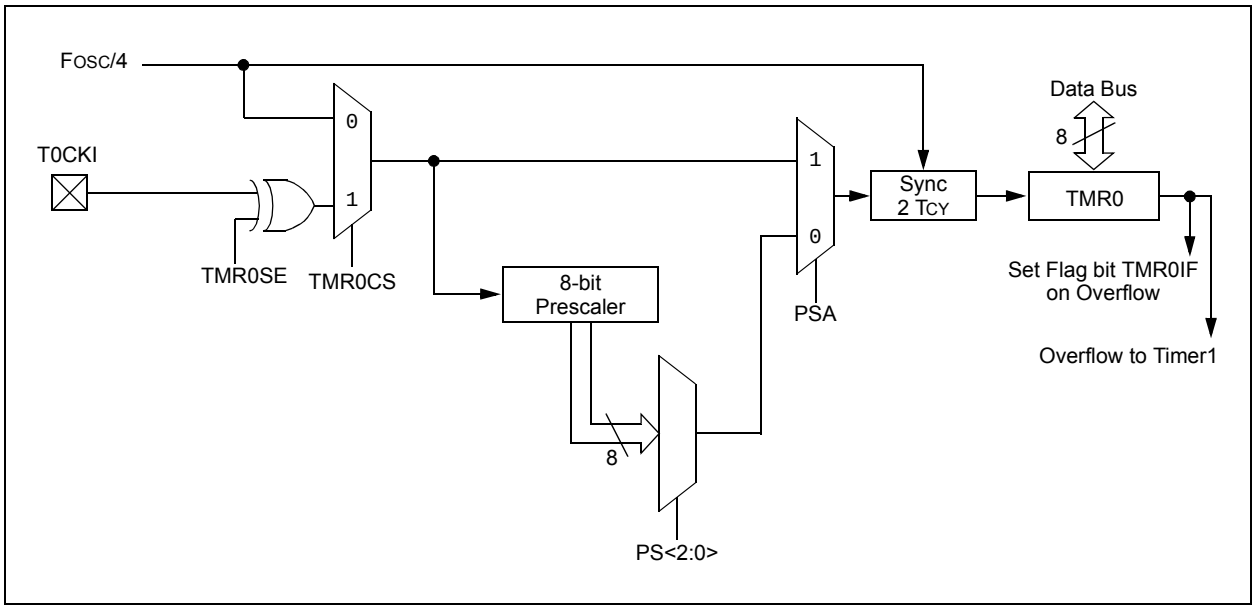

© 2012-2014 Microchip Technology Inc.

21.1.3 SOFTWARE PROGRAMMABLE PRESCALER

A software programmable prescaler is available for exclusive use with Timer0. The prescaler is enabled by clearing the PSA bit of the OPTION_REG register.

Note:	The Watchdog Timer (WDT) uses its own independent prescaler.

There are eight prescaler options for the Timer0 module ranging from 1:2 to 1:256. The prescale values are selectable via the PS<2:0> bits of the OPTION_REG register. In order to have a 1:1 prescaler value for the Timer0 module, the prescaler must be disabled by setting the PSA bit of the OPTION_REG register.

The prescaler is not readable or writable. All instructions writing to the TMR0 register will clear the prescaler.

21.1.4 TIMER0 INTERRUPT

Timer0 will generate an interrupt when the TMR0 register overflows from FFh to 00h. The TMR0IF interrupt flag bit of the INTCON register is set every time the TMR0 register overflows, regardless of whether or not the Timer0 interrupt is enabled. The TMR0IF bit can only be cleared in software. The Timer0 interrupt enable is the TMR0IE bit of the INTCON register.

Note:	The Timer0 interrupt cannot wake the processor from Sleep since the timer is frozen during Sleep.

21.1.5 8-BIT COUNTER MODE SYNCHRONIZATION

When in 8-Bit Counter mode, the incrementing edge on the T0CKI pin must be synchronized to the instruction clock. Synchronization can be accomplished by sampling the prescaler output on the Q2 and Q4 cycles of the instruction clock. The high and low periods of the external clocking source must meet the timing requirements as shown in **Section 30.0 “Electrical Specifications”**.

21.1.6 OPERATION DURING SLEEP

Timer0 cannot operate while the processor is in Sleep mode. The contents of the TMR0 register will remain unchanged while the processor is in Sleep mode.

21.2 Register Definitions: Option Register

REGISTER 21-1: OPTION_REG: OPTION REGISTER

R/W-1/1	R/W-1/1	R/W-1/1	R/W-1/1	R/W-1/1	R/W-1/1	R/W-1/1	R/W-1/1
$\overline{\text{WPUEN}}$	INTEDG	TMR0CS	TMR0SE	PSA	PS<2:0>		
bit 7							bit 0

Legend:		
R = Readable bit	W = Writable bit	U = Unimplemented bit, read as ‘0’
u = Bit is unchanged	x = Bit is unknown	-n/n = Value at POR and BOR/Value at all other Resets
‘1’ = Bit is set	‘0’ = Bit is cleared	

bit 7 **$\overline{\text{WPUEN}}$:** Weak Pull-Up Enable bit
1 = All weak pull-ups are disabled (except $\overline{\text{MCLR}}$, if it is enabled)
0 = Weak pull-ups are enabled by individual WPUx latch values

bit 6 **INTEDG:** Interrupt Edge Select bit
1 = Interrupt on rising edge of INT pin
0 = Interrupt on falling edge of INT pin

bit 5 **TMR0CS:** Timer0 Clock Source Select bit
1 = Transition on T0CKI pin
0 = Internal instruction cycle clock (FOSC/4)

bit 4 **TMR0SE:** Timer0 Source Edge Select bit
1 = Increment on high-to-low transition on T0CKI pin
0 = Increment on low-to-high transition on T0CKI pin

bit 3 **PSA:** Prescaler Assignment bit
1 = Prescaler is not assigned to the Timer0 module
0 = Prescaler is assigned to the Timer0 module

bit 2-0 **PS<2:0>:** Prescaler Rate Select bits

Bit Value	Timer0 Rate
000	1 : 2
001	1 : 4
010	1 : 8
011	1 : 16
100	1 : 32
101	1 : 64
110	1 : 128
111	1 : 256

TABLE 21-1: SUMMARY OF REGISTERS ASSOCIATED WITH TIMER0

Name	Bit 7	Bit 6	Bit 5	Bit 4	Bit 3	Bit 2	Bit 1	Bit 0	Register on Page
INTCON	GIE	PEIE	TMR0IE	INTE	IOCIE	TMR0IF	INTF	IOCIF	93
OPTION_REG	$\overline{\text{WPUEN}}$	INTEDG	TMR0CS	TMR0SE	PSA	PS<2:0>			198
TMR0	Timer0 Module Register								196*
TRISA	TRISA7	TRISA6	TRISA5	TRISA4	TRISA3	TRISA2	TRISA1	TRISA0	131

Legend: — = Unimplemented location, read as ‘0’. Shaded cells are not used by the Timer0 module.
* Page provides register information.

© 2012-2014 Microchip Technology Inc.

22.0 TIMER1 MODULE WITH GATE CONTROL

The Timer1 module is a 16-bit timer/counter with the following features:

- 16-bit timer/counter register pair (TMR1H:TMR1L)
- Programmable internal or external clock source
- 2-bit prescaler
- Dedicated 32 kHz oscillator circuit
- Optionally synchronized comparator out
- Multiple Timer1 gate (count enable) sources
- Interrupt on overflow
- Wake-up on overflow (external clock, Asynchronous mode only)
- Time base for the Capture/Compare function
- Auto-conversion Trigger (with CCP)
- Selectable Gate Source Polarity
- Gate Toggle mode
- Gate Single-pulse mode
- Gate Value Status
- Gate Event Interrupt

Figure 22-1 is a block diagram of the Timer1 module.

FIGURE 22-1: TIMER1 BLOCK DIAGRAM

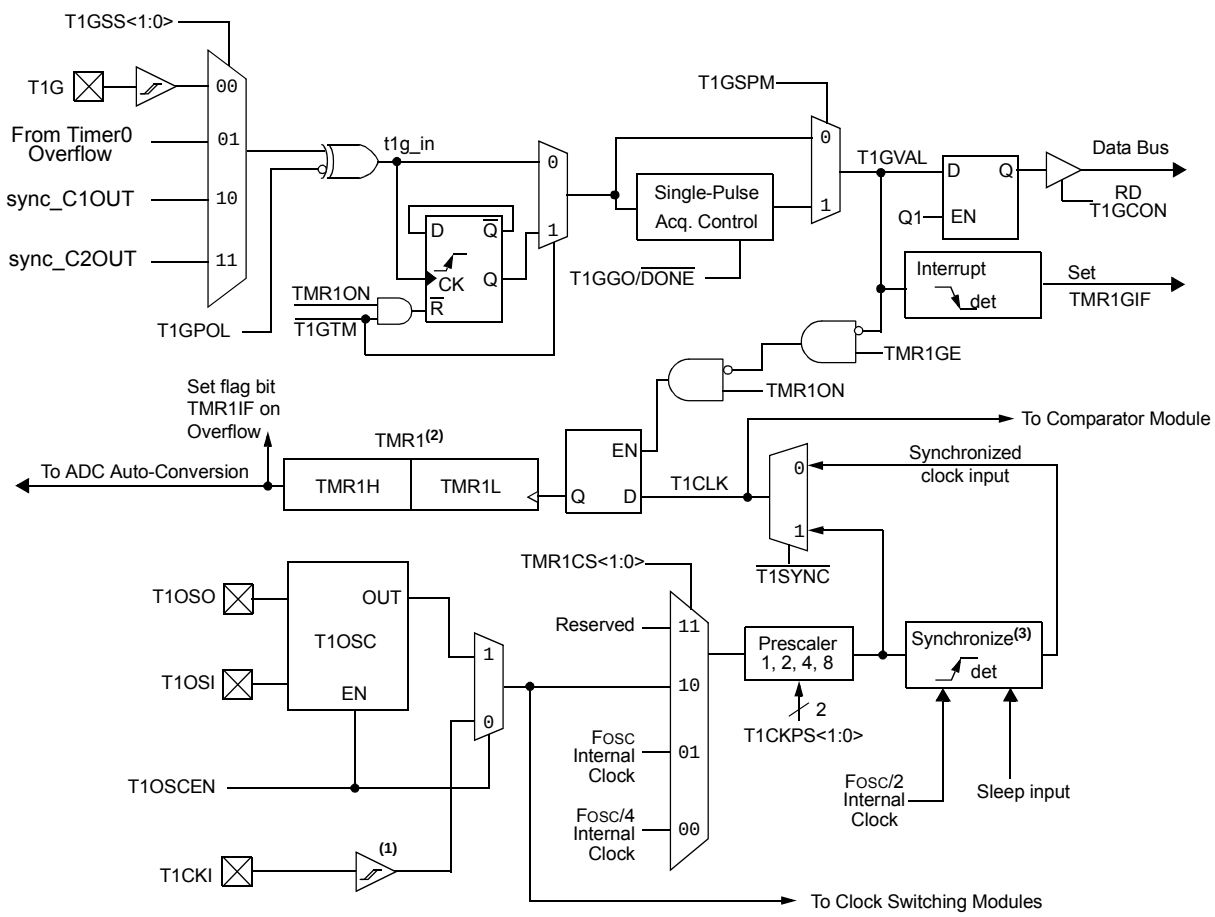

Note 1: ST Buffer is high speed type when using T1CKI.
2: Timer1 register increments on rising edge.
3: Synchronize does not operate while in Sleep.

22.1 Timer1 Operation

The Timer1 module is a 16-bit incrementing counter which is accessed through the TMR1H:TMR1L register pair. Writes to TMR1H or TMR1L directly update the counter.

When used with an internal clock source, the module is a timer and increments on every instruction cycle. When used with an external clock source, the module can be used as either a timer or counter and increments on every selected edge of the external source.

Timer1 is enabled by configuring the TMR1ON and TMR1GE bits in the T1CON and T1GCON registers, respectively. Table 22-1 displays the Timer1 enable selections.

TABLE 22-1: TIMER1 ENABLE SELECTIONS

TMR1ON	TMR1GE	Timer1 Operation
0	0	Off
0	1	Off
1	0	Always On
1	1	Count Enabled

22.2 Clock Source Selection

The TMR1CS<1:0> and T1OSCEN bits of the T1CON register are used to select the clock source for Timer1. Table 22-2 displays the clock source selections.

22.2.1 INTERNAL CLOCK SOURCE

When the internal clock source is selected, the TMR1H:TMR1L register pair will increment on multiples of FOSC as determined by the Timer1 prescaler.

When the FOSC internal clock source is selected, the Timer1 register value will increment by four counts every instruction clock cycle. Due to this condition, a 2 LSB error in resolution will occur when reading the Timer1 value. To utilize the full resolution of Timer1, an asynchronous input signal must be used to gate the Timer1 clock input.

The following asynchronous sources may be used:

- Asynchronous event on the T1G pin to Timer1 gate
- C1 or C2 comparator input to Timer1 gate

22.2.2 EXTERNAL CLOCK SOURCE

When the external clock source is selected, the Timer1 module may work as a timer or a counter.

When enabled to count, Timer1 is incremented on the rising edge of the external clock input T1CKI, which can be synchronized to the microcontroller system clock or can run asynchronously.

When used as a timer with a clock oscillator, an external 32.768 kHz crystal can be used in conjunction with the dedicated internal oscillator circuit.

Note: In Counter mode, a falling edge must be registered by the counter prior to the first incrementing rising edge after any one or more of the following conditions:

- Timer1 enabled after POR
- Write to TMR1H or TMR1L
- Timer1 is disabled
- Timer1 is disabled (TMR1ON = 0) when T1CKI is high then Timer1 is enabled (TMR1ON=1) when T1CKI is low.

TABLE 22-2: CLOCK SOURCE SELECTIONS

TMR1CS<1:0>	T1OSCEN	Clock Source
11	x	Reserved
10	1	Timer1 Oscillator
10	0	External Clocking on T1CKI Pin
01	x	System Clock (FOSC)
00	x	Instruction Clock (FOSC/4)

© 2012-2014 Microchip Technology Inc.

22.3 Timer1 Prescaler

Timer1 has four prescaler options allowing 1, 2, 4 or 8 divisions of the clock input. The T1CKPS bits of the T1CON register control the prescale counter. The prescale counter is not directly readable or writable; however, the prescaler counter is cleared upon a write to TMR1H or TMR1L.

22.4 Timer1 Oscillator

A dedicated low-power 32.768 kHz oscillator circuit is built-in between pins T1OSI (input) and T1OSO (amplifier output). This internal circuit is to be used in conjunction with an external 32.768 kHz crystal.

The oscillator circuit is enabled by setting the T1OSCEN bit of the T1CON register. The oscillator will continue to run during Sleep.

Note: The oscillator requires a start-up and stabilization time before use. Thus, T1OSCEN should be set and a suitable delay observed prior to using Timer1. A suitable delay similar to the OST delay can be implemented in software by clearing the TMR1IF bit then presetting the TMR1H:TMR1L register pair to FC00h. The TMR1IF flag will be set when 1024 clock cycles have elapsed, thereby indicating that the oscillator is running and reasonably stable.

22.5 Timer1 Operation in Asynchronous Counter Mode

If the control bit $\overline{\text{T1SYNC}}$ of the T1CON register is set, the external clock input is not synchronized. The timer increments asynchronously to the internal phase clocks. If the external clock source is selected then the timer will continue to run during Sleep and can generate an interrupt on overflow, which will wake-up the processor. However, special precautions in software are needed to read/write the timer (see **Section 22.5.1 "Reading and Writing Timer1 in Asynchronous Counter Mode"**).

Note: When switching from synchronous to asynchronous operation, it is possible to skip an increment. When switching from asynchronous to synchronous operation, it is possible to produce an additional increment.

22.5.1 READING AND WRITING TIMER1 IN ASYNCHRONOUS COUNTER MODE

Reading TMR1H or TMR1L while the timer is running from an external asynchronous clock will ensure a valid read (taken care of in hardware). However, the user should keep in mind that reading the 16-bit timer in two 8-bit values itself, poses certain problems, since the timer may overflow between the reads.

For writes, it is recommended that the user simply stop the timer and write the desired values. A write contention may occur by writing to the timer registers, while the register is incrementing. This may produce an unpredictable value in the TMR1H:TMR1L register pair.

22.6 Timer1 Gate

Timer1 can be configured to count freely or the count can be enabled and disabled using Timer1 gate circuitry. This is also referred to as Timer1 Gate Enable.

Timer1 gate can also be driven by multiple selectable sources.

22.6.1 TIMER1 GATE ENABLE

The Timer1 Gate Enable mode is enabled by setting the TMR1GE bit of the T1GCON register. The polarity of the Timer1 Gate Enable mode is configured using the T1GPOL bit of the T1GCON register.

When Timer1 Gate Enable mode is enabled, Timer1 will increment on the rising edge of the Timer1 clock source. When Timer1 Gate Enable mode is disabled, no incrementing will occur and Timer1 will hold the current count. See Figure 22-3 for timing details.

TABLE 22-3: TIMER1 GATE ENABLE SELECTIONS

T1CLK	T1GPOL	T1G	Timer1 Operation
↑	0	0	Counts
↑	0	1	Holds Count
↑	1	0	Holds Count
↑	1	1	Counts

22.6.2 TIMER1 GATE SOURCE SELECTION

Timer1 gate source selections are shown in Table 22-4. Source selection is controlled by the T1GSS bits of the T1GCON register. The polarity for each available source is also selectable. Polarity selection is controlled by the T1GPOL bit of the T1GCON register.

TABLE 22-4: TIMER1 GATE SOURCES

T1GSS	Timer1 Gate Source
00	Timer1 Gate Pin
01	Overflow of Timer0 (TMR0 increments from FFh to 00h)
10	Comparator 1 Output sync_C1OUT (optionally Timer1 synchronized output)
11	Comparator 2 Output sync_C2OUT (optionally Timer1 synchronized output)

22.6.2.1 T1G Pin Gate Operation

The T1G pin is one source for Timer1 gate control. It can be used to supply an external source to the Timer1 gate circuitry.

22.6.2.2 Timer0 Overflow Gate Operation

When Timer0 increments from FFh to 00h, a low-to-high pulse will automatically be generated and internally supplied to the Timer1 gate circuitry.

22.6.2.3 Comparator C1 Gate Operation

The output resulting from a Comparator 1 operation can be selected as a source for Timer1 gate control. The Comparator 1 output (sync_C1OUT) can be synchronized to the Timer1 clock or left asynchronous. For more information see **Section 20.4.1 "Comparator Output Synchronization"**.

22.6.2.4 Comparator C2 Gate Operation

The output resulting from a Comparator 2 operation can be selected as a source for Timer1 gate control. The Comparator 2 output (sync_C2OUT) can be synchronized to the Timer1 clock or left asynchronous. For more information see **Section 20.4.1 "Comparator Output Synchronization"**.

22.6.3 TIMER1 GATE TOGGLE MODE

When Timer1 Gate Toggle mode is enabled, it is possible to measure the full-cycle length of a Timer1 gate signal, as opposed to the duration of a single level pulse.

The Timer1 gate source is routed through a flip-flop that changes state on every incrementing edge of the signal. See Figure 22-4 for timing details.

Timer1 Gate Toggle mode is enabled by setting the T1GTM bit of the T1GCON register. When the T1GTM bit is cleared, the flip-flop is cleared and held clear. This is necessary in order to control which edge is measured.

Note:	Enabling Toggle mode at the same time as changing the gate polarity may result in indeterminate operation.

22.6.4 TIMER1 GATE SINGLE-PULSE MODE

When Timer1 Gate Single-Pulse mode is enabled, it is possible to capture a single-pulse gate event. Timer1 Gate Single-Pulse mode is enabled by first setting the T1GSPM bit in the T1GCON register. Next, the T1GGO/$\overline{\text{DONE}}$ bit in the T1GCON register must be set. The Timer1 will be fully enabled on the next incrementing edge. On the next trailing edge of the pulse, the T1GGO/$\overline{\text{DONE}}$ bit will automatically be cleared. No other gate events will be allowed to increment Timer1 until the T1GGO/$\overline{\text{DONE}}$ bit is once again set in software. See Figure 22-5 for timing details.

If the Single-Pulse Gate mode is disabled by clearing the T1GSPM bit in the T1GCON register, the T1GGO/$\overline{\text{DONE}}$ bit should also be cleared.

Enabling the Toggle mode and the Single-Pulse mode simultaneously will permit both sections to work together. This allows the cycle times on the Timer1 gate source to be measured. See Figure 22-6 for timing details.

22.6.5 TIMER1 GATE VALUE

When Timer1 Gate Value Status is utilized, it is possible to read the most current level of the gate control value. The value is accessible by reading the T1GVAL bit in the T1GCON register. The T1GVAL bit is valid even when the Timer1 gate is not enabled (TMR1GE bit is cleared).

22.6.6 TIMER1 GATE EVENT INTERRUPT

When Timer1 Gate Event Interrupt is enabled, it is possible to generate an interrupt upon the completion of a gate event. When the falling edge of T1GVAL occurs, the TMR1GIF flag bit in the PIR1 register will be set. If the TMR1GIE bit in the PIE1 register is set, then an interrupt will be recognized.

The TMR1GIF flag bit operates even when the Timer1 gate is not enabled (TMR1GE bit is cleared).

© 2012-2014 Microchip Technology Inc.

22.7 Timer1 Interrupt

The Timer1 register pair (TMR1H:TMR1L) increments to FFFFh and rolls over to 0000h. When Timer1 rolls over, the Timer1 interrupt flag bit of the PIR1 register is set. To enable the interrupt on rollover, you must set these bits:

- TMR1ON bit of the T1CON register
- TMR1IE bit of the PIE1 register
- PEIE bit of the INTCON register
- GIE bit of the INTCON register

The interrupt is cleared by clearing the TMR1IF bit in the Interrupt Service Routine.

Note:	The TMR1H:TMR1L register pair and the TMR1IF bit should be cleared before enabling interrupts.

22.8 Timer1 Operation During Sleep

Timer1 can only operate during Sleep when setup in Asynchronous Counter mode. In this mode, an external crystal or clock source can be used to increment the counter. To set up the timer to wake the device:

- TMR1ON bit of the T1CON register must be set
- TMR1IE bit of the PIE1 register must be set
- PEIE bit of the INTCON register must be set
- $\overline{\text{T1SYNC}}$ bit of the T1CON register must be set
- TMR1CS bits of the T1CON register must be configured
- T1OSCEN bit of the T1CON register must be configured

The device will wake-up on an overflow and execute the next instructions. If the GIE bit of the INTCON register is set, the device will call the Interrupt Service Routine.

Timer1 oscillator will continue to operate in Sleep regardless of the $\overline{\text{T1SYNC}}$ bit setting.

22.9 CCP Capture/Compare Time Base

The CCP modules use the TMR1H:TMR1L register pair as the time base when operating in Capture or Compare mode.

In Capture mode, the value in the TMR1H:TMR1L register pair is copied into the CCPR1H:CCPR1L register pair on a configured event.

In Compare mode, an event is triggered when the value CCPR1H:CCPR1L register pair matches the value in the TMR1H:TMR1L register pair. This event can be a Auto-conversion Trigger.

For more information, see **Section 25.0 "Capture/Compare/PWM Modules"**.

22.10 CCP Auto-Conversion Trigger

When any of the CCP's are configured to trigger a auto-conversion, the trigger will clear the TMR1H:TMR1L register pair. This auto-conversion does not cause a Timer1 interrupt. The CCP module may still be configured to generate a CCP interrupt.

In this mode of operation, the CCPR1H:CCPR1L register pair becomes the period register for Timer1.

Timer1 should be synchronized and FOSC/4 should be selected as the clock source in order to utilize the Auto-conversion Trigger. Asynchronous operation of Timer1 can cause a Auto-conversion Trigger to be missed.

In the event that a write to TMR1H or TMR1L coincides with a Auto-conversion Trigger from the CCP, the write will take precedence.

For more information, see **Section 25.2.4 "Auto-Conversion Trigger"**.

FIGURE 22-2: TIMER1 INCREMENTING EDGE

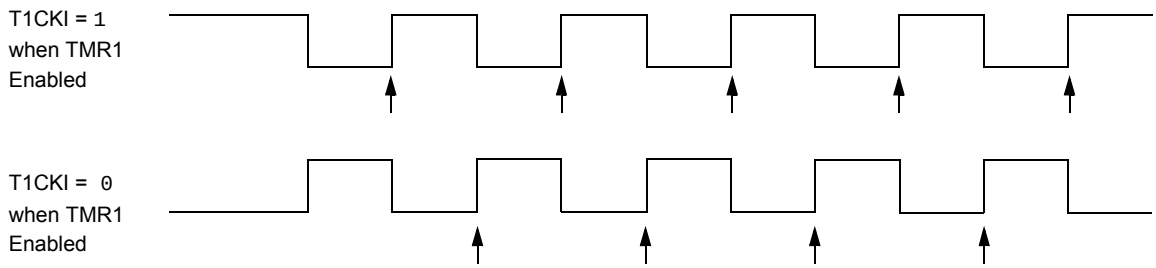

Note 1: Arrows indicate counter increments.

2: In Counter mode, a falling edge must be registered by the counter prior to the first incrementing rising edge of the clock.

FIGURE 22-3: TIMER1 GATE ENABLE MODE

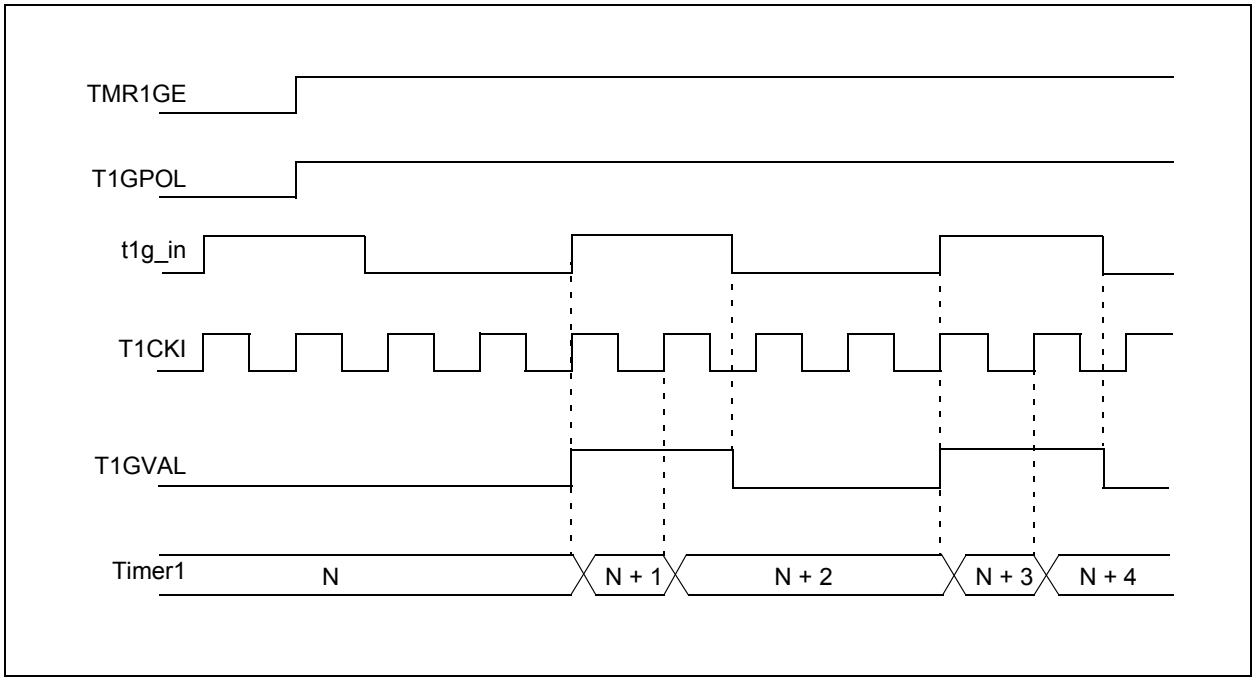

FIGURE 22-4: TIMER1 GATE TOGGLE MODE

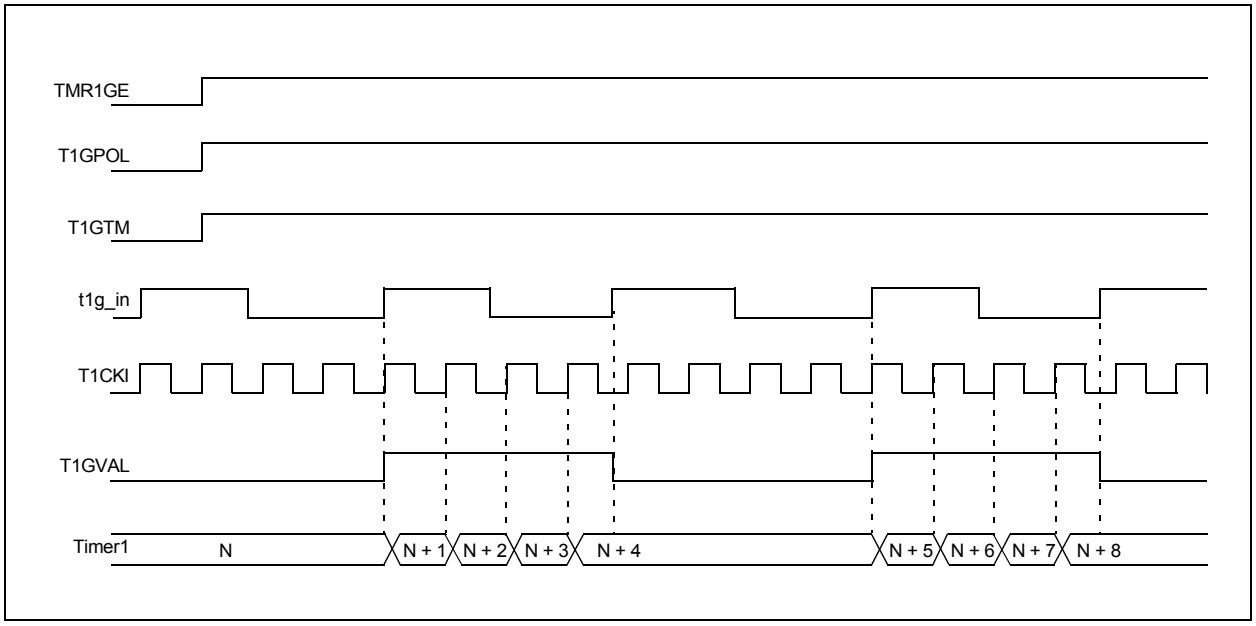

© 2012-2014 Microchip Technology Inc.

FIGURE 22-5: TIMER1 GATE SINGLE-PULSE MODE

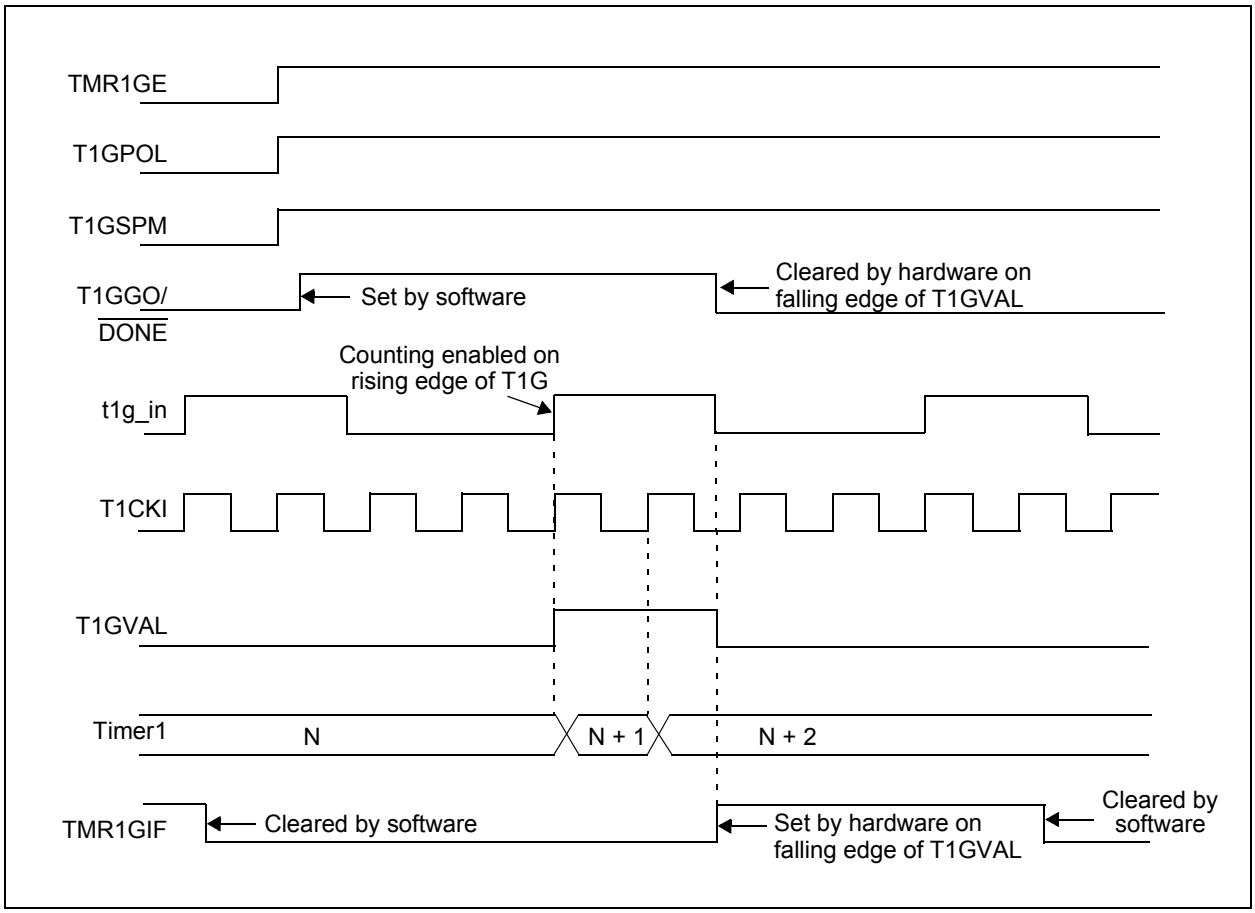

FIGURE 22-6: TIMER1 GATE SINGLE-PULSE AND TOGGLE COMBINED MODE

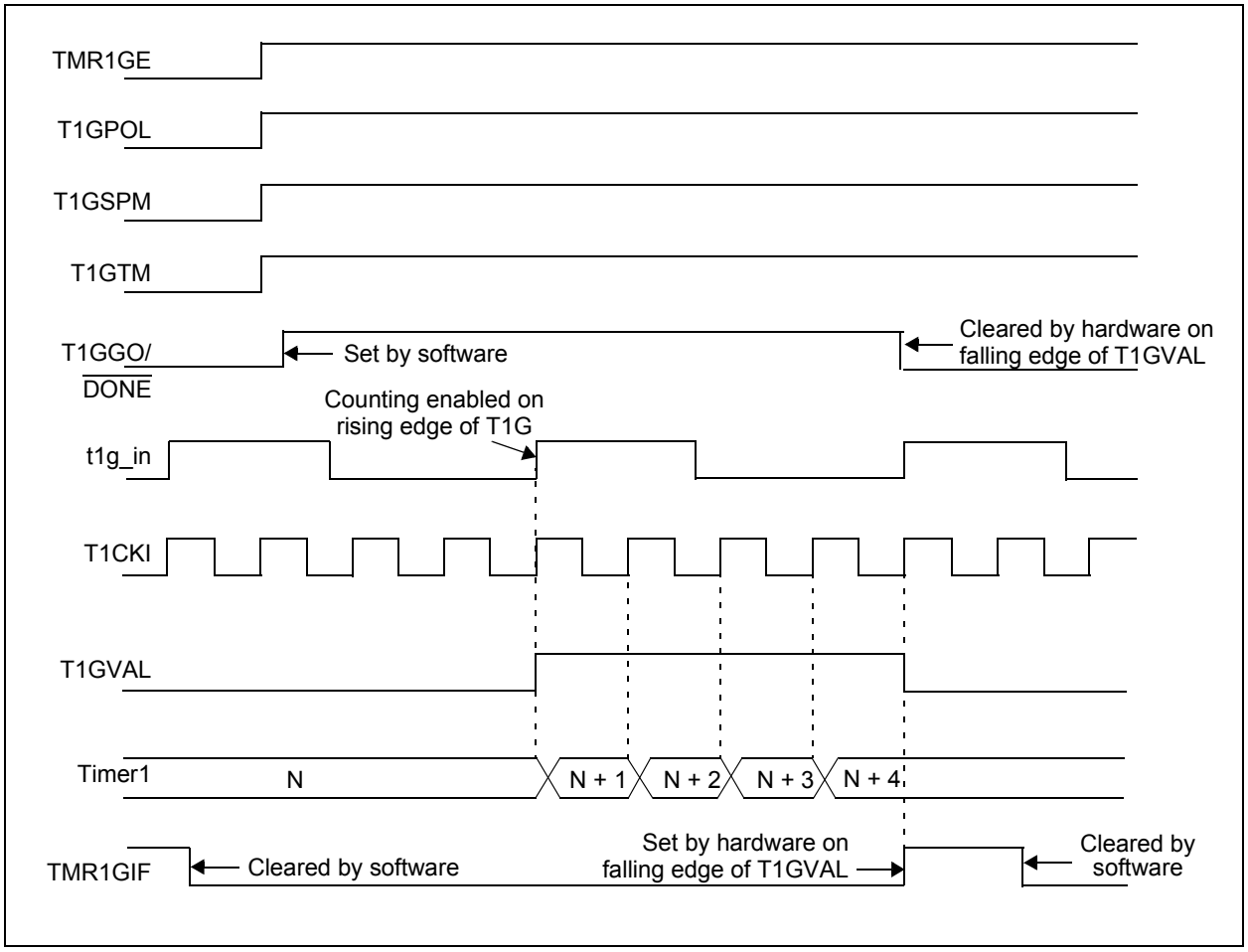

© 2012-2014 Microchip Technology Inc.

22.11 Register Definitions: Timer1 Control

T

REGISTER 22-1: T1CON: TIMER1 CONTROL REGISTER

R/W-0/u	R/W-0/u	R/W-0/u	R/W-0/u	R/W-0/u	R/W-0/u	U-0	R/W-0/u
TMR1CS<1:0>		T1CKPS<1:0>		T1OSCEN	$\overline{\text{T1SYNC}}$	—	TMR1ON
bit 7							bit 0

Legend:		
R = Readable bit	W = Writable bit	U = Unimplemented bit, read as ‘0’
u = Bit is unchanged	x = Bit is unknown	-n/n = Value at POR and BOR/Value at all other Resets
‘1’ = Bit is set	‘0’ = Bit is cleared	

bit 7-6 **TMR1CS<1:0>:** Timer1 Clock Source Select bits
- 11 = Reserved, do not use.
- 10 = Timer1 clock source is pin or oscillator:
  - If T1OSCEN = 0:
  - External clock from T1CKI pin (on the rising edge)
  - If T1OSCEN = 1:
  - Crystal oscillator on T1OSI/T1OSO pins
- 01 = Timer1 clock source is system clock (FOSC)
- 00 = Timer1 clock source is instruction clock (FOSC/4)

bit 5-4 **T1CKPS<1:0>:** Timer1 Input Clock Prescale Select bits
- 11 = 1:8 Prescale value
- 10 = 1:4 Prescale value
- 01 = 1:2 Prescale value
- 00 = 1:1 Prescale value

bit 3 **T1OSCEN:** LP Oscillator Enable Control bit
- 1 = Dedicated Timer1 oscillator circuit enabled
- 0 = Dedicated Timer1 oscillator circuit disabled

bit 2 **$\overline{\text{T1SYNC}}$:** Timer1 Synchronization Control bit
- 1 = Do not synchronize asynchronous clock input
- 0 = Synchronize asynchronous clock input with system clock (FOSC)

bit 1 **Unimplemented:** Read as ‘0’

bit 0 **TMR1ON:** Timer1 On bit
- 1 = Enables Timer1
- 0 = Stops Timer1 and clears Timer1 gate flip-flop

REGISTER 22-2: T1GCON: TIMER1 GATE CONTROL REGISTER

R/W-0/u	R/W-0/u	R/W-0/u	R/W-0/u	R/W/HC-0/u	R-x/x	R/W-0/u	R/W-0/u
TMR1GE	T1GPOL	T1GTM	T1GSPM	T1GGO/$\overline{\text{DONE}}$	T1GVAL	T1GSS<1:0>	
bit 7							bit 0

Legend:		
R = Readable bit	W = Writable bit	U = Unimplemented bit, read as ‘0’
u = Bit is unchanged	x = Bit is unknown	-n/n = Value at POR and BOR/Value at all other Resets
‘1’ = Bit is set	‘0’ = Bit is cleared	HC = Bit is cleared by hardware

bit 7 **TMR1GE:** Timer1 Gate Enable bit

If TMR1ON = 0:
This bit is ignored
If TMR1ON = 1:
1 = Timer1 counting is controlled by the Timer1 gate function
0 = Timer1 counts regardless of Timer1 gate function

bit 6 **T1GPOL:** Timer1 Gate Polarity bit

1 = Timer1 gate is active-high (Timer1 counts when gate is high)
0 = Timer1 gate is active-low (Timer1 counts when gate is low)

bit 5 **T1GTM:** Timer1 Gate Toggle Mode bit

1 = Timer1 Gate Toggle mode is enabled
0 = Timer1 Gate Toggle mode is disabled and toggle flip-flop is cleared
Timer1 gate flip-flop toggles on every rising edge.

bit 4 **T1GSPM:** Timer1 Gate Single-Pulse Mode bit

1 = Timer1 Gate Single-Pulse mode is enabled and is controlling Timer1 gate
0 = Timer1 Gate Single-Pulse mode is disabled

bit 3 **T1GGO/$\overline{\text{DONE}}$:** Timer1 Gate Single-Pulse Acquisition Status bit

1 = Timer1 gate single-pulse acquisition is ready, waiting for an edge
0 = Timer1 gate single-pulse acquisition has completed or has not been started

bit 2 **T1GVAL:** Timer1 Gate Current State bit

Indicates the current state of the Timer1 gate that could be provided to TMR1H:TMR1L.
Unaffected by Timer1 Gate Enable (TMR1GE).

bit 1-0 **T1GSS<1:0>:** Timer1 Gate Source Select bits

11 = Comparator 2 optionally synchronized output (sync_C2OUT)
10 = Comparator 1 optionally synchronized output (sync_C1OUT)
01 = Timer0 overflow output
00 = Timer1 gate pin

© 2012-2014 Microchip Technology Inc.

TABLE 22-5: SUMMARY OF REGISTERS ASSOCIATED WITH TIMER1

Name	Bit 7	Bit 6	Bit 5	Bit 4	Bit 3	Bit 2	Bit 1	Bit 0	Register on Page
ANSELB	—	ANSB6	ANSB5	ANSB4	ANSB3	ANSB2	ANSB1	ANSB0	138
CCP1CON	—	—	DC1B<1:0>		CCP1M<3:0>				280
CCP2CON	—	—	DC2B<1:0>		CCP2M<3:0>				280
INTCON	GIE	PEIE	TMR0IE	INTE	IOCIE	TMR0IF	INTF	IOCIF	93
PIE1	TMR1GIE	ADIE	RCIE	TXIE	SSP1IE	CCP1IE	TMR2IE	TMR1IE	94
PIR1	TMR1GIF	ADIF	RCIF	TXIF	SSP1IF	CCP1IF	TMR2IF	TMR1IF	98
TMR1H	Holding Register for the Most Significant Byte of the 16-bit TMR1 Register								199*
TMR1L	Holding Register for the Least Significant Byte of the 16-bit TMR1 Register								199*
TRISB	TRISB7	TRISB6	TRISB5	TRISB4	TRISB3	TRISB2	TRISB1	TRISB0	137
TRISC	TRISC7	TRISC6	TRISC5	TRISC4	TRISC3	TRISC2	TRISC1	TRISC0	142
T1CON	TMR1CS<1:0>		T1CKPS<1:0>		T1OSCEN	$\overline{\text{T1SYNC}}$	—	TMR1ON	207
T1GCON	TMR1GE	T1GPOL	T1GTM	T1GSPM	T1GGO/ $\overline{\text{DONE}}$	T1GVAL	T1GSS<1:0>		208

Legend: — = unimplemented location, read as '0'. Shaded cells are not used by the Timer1 module.
* Page provides register information.

23.0 TIMER2 MODULE

The Timer2 module incorporates the following features:

- 8-bit Timer and Period registers (TMR2 and PR2, respectively)
- Readable and writable (both registers)
- Software programmable prescaler (1:1, 1:4, 1:16, and 1:64)
- Software programmable postscaler (1:1 to 1:16)
- Interrupt on TMR2 match with PR2
- Optional use as the shift clock for the MSSP module

See Figure 23-1 for a block diagram of Timer2.

FIGURE 23-1: TIMER2 BLOCK DIAGRAM

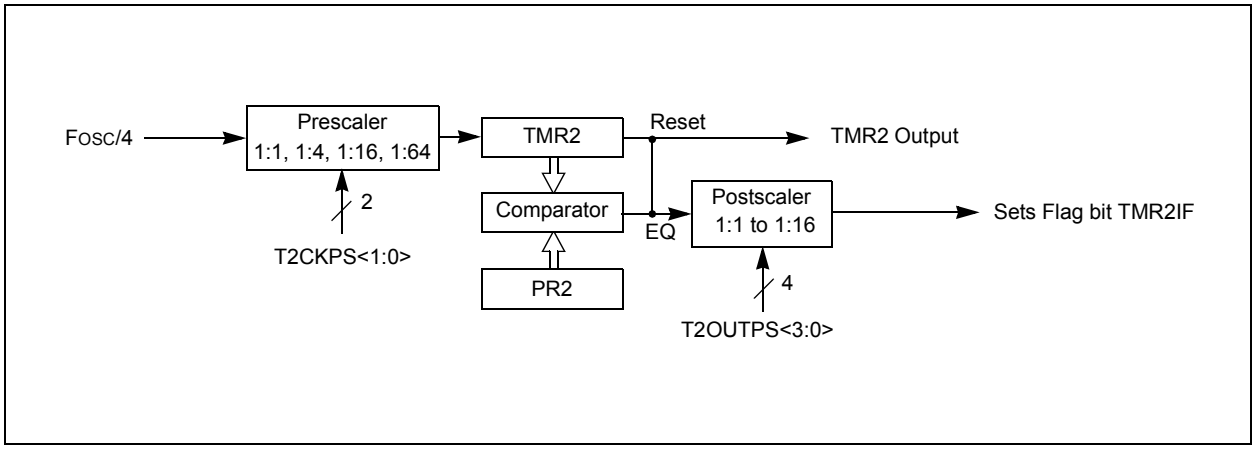

© 2012-2014 Microchip Technology Inc.

23.1 Timer2 Operation

The clock input to the Timer2 modules is the system instruction clock (FOSC/4).

A 4-bit counter/prescaler on the clock input allows direct input, divide-by-4 and divide-by-16 prescale options. These options are selected by the prescaler control bits, T2CKPS<1:0> of the T2CON register. The value of TMR2 is compared to that of the Period register, PR2, on each clock cycle. When the two values match, the comparator generates a match signal as the timer output. This signal also resets the value of TMR2 to 00h on the next cycle and drives the output counter/postscaler (see **Section 23.2 "Timer2 Interrupt"**).

The TMR2 and PR2 registers are both directly readable and writable. The TMR2 register is cleared on any device Reset, whereas the PR2 register initializes to FFh. Both the prescaler and postscaler counters are cleared on the following events:

- a write to the TMR2 register
- a write to the T2CON register
- Power-on Reset (POR)
- Brown-out Reset (BOR)
- $\overline{\text{MCLR}}$ Reset
- Watchdog Timer (WDT) Reset
- Stack Overflow Reset
- Stack Underflow Reset
- RESET Instruction

Note:	TMR2 is not cleared when T2CON is written.

23.2 Timer2 Interrupt

Timer2 can also generate an optional device interrupt. The Timer2 output signal (TMR2-to-PR2 match) provides the input for the 4-bit counter/postscaler. This counter generates the TMR2 match interrupt flag which is latched in TMR2IF of the PIR1 register. The interrupt is enabled by setting the TMR2 Match Interrupt Enable bit, TMR2IE, of the PIE1 register.

A range of 16 postscale options (from 1:1 through 1:16 inclusive) can be selected with the postscaler control bits, T2OUTPS<3:0>, of the T2CON register.

23.3 Timer2 Output

The unscaled output of TMR2 is available primarily to the CCP modules, where it is used as a time base for operations in PWM mode.

Timer2 can be optionally used as the shift clock source for the MSSP module operating in SPI mode. Additional information is provided in **Section 26.0 "Master Synchronous Serial Port (MSSP) Module"**

23.4 Timer2 Operation During Sleep

The Timer2 timers cannot be operated while the processor is in Sleep mode. The contents of the TMR2 and PR2 registers will remain unchanged while the processor is in Sleep mode.

23.5 Register Definitions: Timer2 Control

REGISTER 23-1: T2CON: TIMER2 CONTROL REGISTER

U-0	R/W-0/0	R/W-0/0	R/W-0/0	R/W-0/0	R/W-0/0	R/W-0/0	R/W-0/0
—	T2OUTPS<3:0>				TMR2ON	T2CKPS<1:0>	
bit 7							bit 0

Legend:		
R = Readable bit	W = Writable bit	U = Unimplemented bit, read as ‘0’
u = Bit is unchanged	x = Bit is unknown	-n/n = Value at POR and BOR/Value at all other Resets
‘1’ = Bit is set	‘0’ = Bit is cleared	

bit 7 **Unimplemented:** Read as ‘0’

bit 6-3 **T2OUTPS<3:0>:** Timer2 Output Postscaler Select bits
1111 = 1:16 Postscaler
1110 = 1:15 Postscaler
1101 = 1:14 Postscaler
1100 = 1:13 Postscaler
1011 = 1:12 Postscaler
1010 = 1:11 Postscaler
1001 = 1:10 Postscaler
1000 = 1:9 Postscaler
0111 = 1:8 Postscaler
0110 = 1:7 Postscaler
0101 = 1:6 Postscaler
0100 = 1:5 Postscaler
0011 = 1:4 Postscaler
0010 = 1:3 Postscaler
0001 = 1:2 Postscaler
0000 = 1:1 Postscaler

bit 2 **TMR2ON:** Timer2 On bit
1 = Timer2 is on
0 = Timer2 is off

bit 1-0 **T2CKPS<1:0>:** Timer2 Clock Prescale Select bits
11 = Prescaler is 64
10 = Prescaler is 16
01 = Prescaler is 4
00 = Prescaler is 1

© 2012-2014 Microchip Technology Inc.

TABLE 23-1: SUMMARY OF REGISTERS ASSOCIATED WITH TIMER2

Name	Bit 7	Bit 6	Bit 5	Bit 4	Bit 3	Bit 2	Bit 1	Bit 0	Register on Page
CCP2CON	—	—	DC2B<1:0>		CCP2M<3:0>				280
INTCON	GIE	PEIE	TMR0IE	INTE	IOCIE	TMR0IF	INTF	IOCIF	93
PIE1	TMR1GIE	ADIE	RCIE	TXIE	SSP1IE	CCP1IE	TMR2IE	TMR1IE	94
PIR1	TMR1GIF	ADIF	RCIF	TXIF	SSP1IF	CCP1IF	TMR2IF	TMR1IF	98
PR2	Timer2 Module Period Register								210*
T2CON	—	T2OUTPS<3:0>				TMR2ON	T2CKPS<1:0>		212
TMR2	Holding Register for the 8-bit TMR2 Register								210*

Legend: — = unimplemented location, read as '0'. Shaded cells are not used for Timer2 module.

* Page provides register information.

24.0 PROGRAMMABLE SWITCH MODE CONTROL (PSMC)

The Programmable Switch Mode Controller (PSMC) is a high-performance Pulse Width Modulator (PWM) that can be configured to operate in one of several modes to support single or multiple phase applications.

A simplified block diagram indicating the relationship between inputs, outputs, and controls is shown in Figure 24-1.

This section begins with the fundamental aspects of the PSMC operation. A more detailed description of operation for each mode is located later in **Section 24.3 "Modes of Operation"**

Modes of operation include:

- Single-phase
- Complementary Single-phase
- Push-Pull
- Push-Pull 4-Bridge
- Complementary Push-Pull 4-Bridge
- Pulse Skipping
- Variable Frequency Fixed Duty Cycle
- Complementary Variable Frequency Fixed Duty Cycle
- ECCP Compatible modes
  - Full-Bridge
  - Full-Bridge Reverse
- 3-Phase 6-Step PWM

© 2012-2014 Microchip Technology Inc.

FIGURE 24-1: PSMC SIMPLIFIED BLOCK DIAGRAM

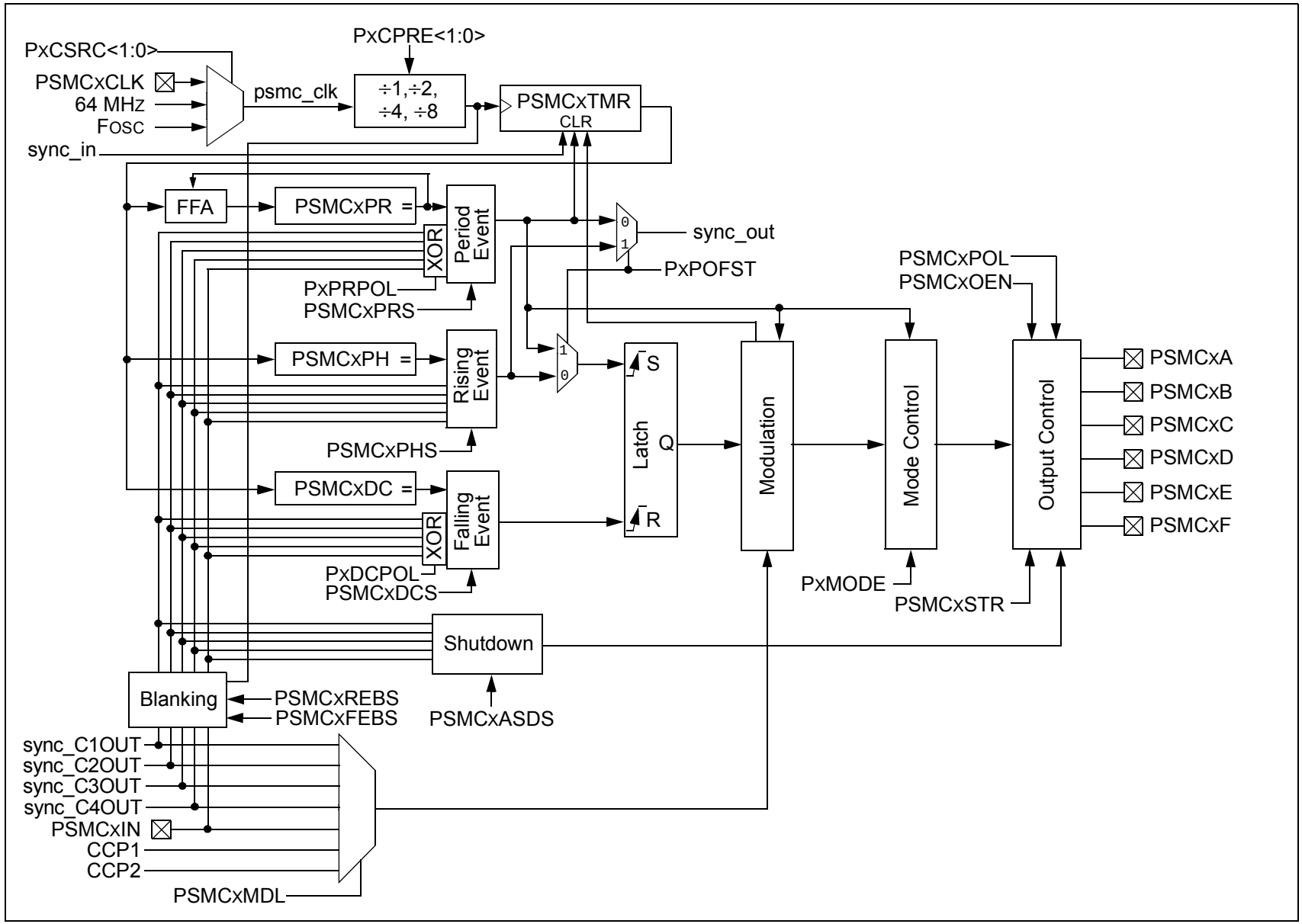

© 2012-2014 Microchip Technology Inc.

24.1 Fundamental Operation

PSMC operation is based on the sequence of three events:

- Period Event – Determines the frequency of the active signal.
- Rising Edge Event – Determines start of the active pulse. This is also referred to as the phase.
- Falling Edge Event – Determines the end of the active pulse. This is also referred to as the duty cycle.

The basic waveform generated from these events is shown in Figure 24-2.

FIGURE 24-2: BASIC PWM WAVEFORM GENERATION

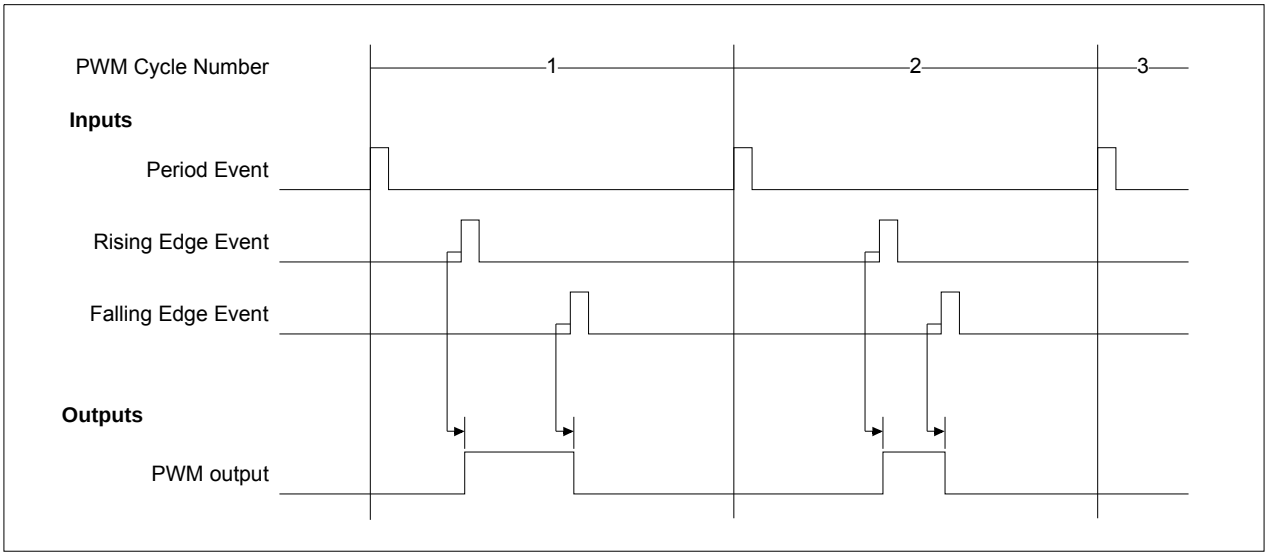

Each of the three types of events is triggered by a user selectable combination of synchronous timed and asynchronous external inputs.

Asynchronous event inputs may come directly from an input pin or through the comparators.

Synchronous timed events are determined from the PSMCxTMR counter, which is derived from internal clock sources. See **Section 24.2.5 "PSMC Time Base Clock Sources"** for more detail.

The active pulse stream can be further modulated by one of several internal or external sources:

- Register control bit
- Comparator output
- CCP output
- Input pin

User selectable deadtime can be inserted in the drive outputs to prevent shoot through of configurations with two devices connected in series between the supply rails.

Applications requiring very small frequency granularity control when the PWM frequency is large can do so with the fractional frequency control available in the variable frequency fixed Duty Cycle modes.

PSMC operation can be quickly terminated without software intervention by the auto-shutdown control. Auto-shutdown can be triggered by any combination of the following:

- PSMCxIN pin
- sync_C1OUT
- sync_C2OUT
- sync_C3OUT
- sync_C4OUT

© 2012-2014 Microchip Technology Inc.

24.1.1 PERIOD EVENT

The period event determines the frequency of the active pulse. Period event sources include any combination of the following:

- PSMCxTMR counter match
- PSMC input pin
- sync_C1OUT
- sync_C2OUT
- sync_C3OUT
- sync_C4OUT

Period event sources are selected with the PSMC Period Source (PSMCxPRS) register (Register 24-14).

Section 24.2.1.2 "16-bit Period Register" contains details on configuring the PSMCxTMR counter match for synchronous period events.

All period events cause the PSMCxTMR counter to reset on the counting clock edge immediately following the period event. The PSMCxTMR counter resumes counting from zero on the counting clock edge after the period event Reset.

During a period, the rising event and falling event are each permitted to occur only once. Subsequent rising or falling events that may occur within the period are suppressed, thereby preventing output chatter from spurious inputs.

24.1.2 RISING EDGE EVENT

The rising edge event determines the start of the active drive period. The rising edge event is also referred to as the phase because two synchronized PSMC peripherals may have different rising edge events relative to the period start, thereby creating a phase relationship between the two PSMC peripheral outputs.

Depending on the PSMC mode, one or more of the PSMC outputs will change in immediate response to the rising edge event. Rising edge event sources include any combination of the following:

- Synchronous:
  - PSMCxTMR time base counter match
- Asynchronous:
  - PSMC input pin
  - sync_C1OUT
  - sync_C2OUT
  - sync_C3OUT
  - sync_C4OUT

Rising edge event sources are selected with the PSMC Phase Source (PSMCxPHS) register (Register 24-12).

For configuring the PSMCxTMR time base counter match for synchronous rising edge events, see **Section 24.2.1.3 "16-bit Phase Register"**.

The first rising edge event in a cycle period is the only one permitted to cause action. All subsequent rising edge events in the same period are suppressed to prevent the PSMC output from chattering in the presence of spurious event inputs. A rising edge event is also suppressed when it occurs after a falling edge event in the same period.

The rising edge event also triggers the start of two other timers when needed: falling edge blanking and dead-band period. For more detail refer to **Section 24.2.8 "Input Blanking"** and **Section 24.4 "Dead-Band Control"**.

When the rising edge event is delayed from the period start, the amount of delay subtracts from the total amount of time available for the drive duty cycle. For example, if the rising edge event is delayed by 10% of the period time, the maximum duty cycle for that period is 90%. A 100% duty cycle is still possible in this example, but duty cycles from 90% to 100% are not possible.

24.1.3 FALLING EDGE EVENT

The falling edge event determines the end of the active drive period. The falling edge event is also referred to as the duty cycle because varying the falling edge event, while keeping the rising edge event and period events fixed, varies the active drive duty cycle.

Depending on the PSMC mode, one or more of the PSMC outputs will change in immediate response to the falling edge event. Falling edge event sources include any combination of the following:

- Synchronous:
  - PSMCxTMR time base counter match
- Asynchronous:
  - PSMC input pin
  - sync_C1OUT
  - sync_C2OUT
  - sync_C3OUT
  - sync_C4OUT

Falling edge event sources are selected with PSMC Duty Cycle Source (PSMCxDCS) register (Register 24-13).

For configuring the PSMCxTMR time base counter match for synchronous falling edge events, see **Section 24.2.1.4 "16-bit Duty Cycle Register"**.

The first falling edge event in a cycle period is the only one permitted to cause action. All subsequent falling edge events in the same period are suppressed to prevent the PSMC output from chattering in the presence of spurious event inputs.

A falling edge event suppresses any subsequent rising edges that may occur in the same period. In other words, if an asynchronous falling event input should come late and occur early in the period, following that for which it was intended, the rising edge in that period will be suppressed. This will have a similar effect as pulse skipping.

The falling edge event also triggers the start of two other timers: rising edge blanking and dead-band period. For more detail refer to **Section 24.2.8 "Input Blanking"** and **Section 24.4 "Dead-Band Control"**.

24.2 Event Sources

There are two main sources for the period, rising edge and falling edge events:

- Synchronous input
  - Time base
- Asynchronous Inputs
  - Digital Inputs
  - Analog inputs

24.2.1 TIME BASE

The Time Base section consists of several smaller pieces.

- 16-bit time base counter
- 16-bit Period register
- 16-bit Phase register (rising edge event)
- 16-bit Duty Cycle register (falling edge event)
- Clock control
- Interrupt Generator

An example of a fully synchronous PWM waveform generated with the time base is shown in Figure 24-2.

The PSMCxLD bit of the PSMCxCON register is provided to synchronize changes to the event Count registers. Changes are withheld from taking action until the first period event Reset after the PSMCxLD bit is set. For example, to change the PWM frequency, while maintaining the same effective duty cycle, the Period and Duty Cycle registers need to be changed. The changes to all four registers take effect simultaneously on the period event Reset after the PSMCxLD bit is set.

24.2.1.1 16-bit Counter (Time Base)

The PSMCxTMR is the counter used as a timing reference for each synchronous PWM period. The counter starts at 0000h and increments to FFFFh on the rising edge of the psmc_clk signal.

When the counter rolls over from FFFFh to 0000h without a period event occurring, the overflow interrupt will be generated, thereby setting the PxTOVIF bit of the PSMC Time Base Interrupt Control (PSMCxINT) register (Register 24-33).

The PSMCxTMR counter is reset on both synchronous and asynchronous period events.

The PSMCxTMR is accessible to software as two 8-bit registers:

- PSMC Time Base Counter Low (PSMCxTMRL) register (Register 24-18)
- PSMC PSMC Time Base Counter High (PSMCxTMRH) register (Register 24-19)

PSMCxTMR is reset to the default POR value when the PSMCxEN bit is cleared.

24.2.1.2 16-bit Period Register

The PSMCxPR Period register is used to determine a synchronous period event referenced to the 16-bit PSMCxTMR digital counter. A match between the PSMCxTMR and PSMCxPR register values will generate a period event.

The match will generate a period match interrupt, thereby setting the PxTPRIF bit of the PSMC Time Base Interrupt Control (PSMCxINT) register (Register 24-33).

The 16-bit period value is accessible to software as two 8-bit registers:

- PSMC Period Count Low Byte (PSMCxPRL) register (Register 24-24)
- PSMC Period Count High Byte (PSMCxPRH) register (Register 24-25)

The 16-bit period value is double-buffered before it is presented to the 16-bit time base for comparison. The buffered registers are updated on the first period event Reset after the PSMCxLD bit of the PSMCxCON register is set.

The synchronous PWM period time can be determined from Equation 24-1.

EQUATION 24-1: PWM PERIOD

$$Period = \frac{\text{PSMCxPR}[15:0] + 1}{F_{\text{psmc_clk}}}$$

24.2.1.3 16-bit Phase Register

The PSMCxPH Phase register is used to determine a synchronous rising edge event referenced to the 16-bit PSMCxTMR digital counter. A match between the PSMCxTMR and the PSMCxPH register values will generate a rising edge event.

The match will generate a phase match interrupt, thereby setting the PxTPHIF bit of the PSMC Time Base Interrupt Control (PSMCxINT) register (Register 24-33).

The 16-bit phase value is accessible to software as two 8-bit registers:

- PSMC Phase Count Low Byte (PSMCxPHL) register (Register 24-33)
- PSMC Phase Count High Byte (PSMCxPHH) register (Register 24-33)

The 16-bit phase value is double-buffered before it is presented to the 16-bit PSMCxTMR for comparison. The buffered registers are updated on the first period event Reset after the PSMCxLD bit of the PSMCxCON register is set.

© 2012-2014 Microchip Technology Inc.

24.2.1.4 16-bit Duty Cycle Register

The PSMCxDC Duty Cycle register is used to determine a synchronous falling edge event referenced to the 16-bit PSMCxTMR digital counter. A match between the PSMCxTMR and PSMCxDC register values will generate a falling edge event.

The match will generate a duty cycle match interrupt, thereby setting the PxTDCIF bit of the PSMC Time Base Interrupt Control (PSMCxINT) register (Register 24-33).

The 16-bit duty cycle value is accessible to software as two 8-bit registers:

- PSMC Duty Cycle Count Low Byte (PSMCxDCL) register (Register 24-22)
- PSMC Duty Cycle Count High Byte (PSMCxDCH) register (Register 24-23)

The 16-bit duty cycle value is double-buffered before it is presented to the 16-bit time base for comparison. The buffered registers are updated on the first period event Reset after the PSMCxLD bit of the PSMCxCON register is set.

When the period, phase, and duty cycle are all determined from the time base, the effective PWM duty cycle can be expressed as shown in Equation 24-2.

EQUATION 24-2: PWM DUTY CYCLE

$$DUTYCYCLE = \frac{\text{PSMCxDC[15:0]} - \text{PSMCxPH[15:0]}}{(\text{PSMCxPR[15:0]} + 1)}$$

24.2.2 0% DUTY CYCLE OPERATION USING TIME BASE

To configure the PWM for 0% duty cycle set PSMCxDC<15:0> = PSMCxPH<15:0>. This will trigger a falling edge event simultaneous with the rising edge event and prevent the PWM from being asserted.

24.2.3 100% DUTY CYCLE OPERATION USING TIME BASE

To configure the PWM for 100% duty cycle set PSMCxDC<15:0> > PSMCxPR<15:0>.

This will prevent a falling edge event from occurring as the PSMCxDC<15:0> value and the time base value PSMCxTMR<15:0> will never be equal.

24.2.4 TIME BASE INTERRUPT GENERATION

The Time Base section can generate four unique interrupts:

- Time Base Counter Overflow Interrupt
- Time Base Phase Register Match Interrupt
- Time Base Duty Cycle Register Match Interrupt
- Time Base Period Register Match Interrupt

Each interrupt has an interrupt flag bit and an interrupt enable bit. The interrupt flag bit is set anytime a given event occurs, regardless of the status of the enable bit.

Time base interrupt enables and flags are located in the PSMC Time Base Interrupt Control (PSMCxINT) register (Register 24-33).

PSMC time base interrupts also require that the PSMCxTIE bit in the PIE4 register and the PEIE and GIE bits in the INTCON register be set in order to generate an interrupt. The PSMCxTIF interrupt flag in the PIR4 register will only be set by a time base interrupt when one or more of the enable bits in the PSMCxINT register is set.

The interrupt flag bits need to be cleared in software. However, all PMSCx time base interrupt flags, except PSMCxTIF, are cleared when the PSMCxEN bit is cleared.

Interrupt bits that are set by software will generate an interrupt provided that the corresponding interrupt is enabled.

Note:	Interrupt flags in both the PIE4 and PSMCxINT registers must be cleared to clear the interrupt. The PSMCxINT flags must be cleared first.

24.2.5 PSMC TIME BASE CLOCK SOURCES

There are three clock sources available to the module:

- Internal 64 MHz clock
- Fosc system clock
- External clock input pin

The clock source is selected with the PxCSRC<1:0> bits of the PSMCx Clock Control (PSMCxCLK) register (Register 24-6).

When the Internal 64 MHz clock is selected as the source, the HFINTOSC continues to operate and clock the PSMC circuitry in Sleep. However, the system clock to other peripherals and the CPU is suppressed.

Note:	When the 64 MHz clock is selected, the clock continues to operate in Sleep, even when the PSMC is disabled (PSMCxEN = 0). Select a clock other than the 64 MHz clock to minimize power consumption when the PSMC is not enabled.

The Internal 64 MHz clock utilizes the system clock 4x PLL. When the system clock source is external and the PSMC is using the Internal 64 MHz clock, the 4x PLL should not be used for the system clock.

24.2.6 CLOCK PRESCALER

There are four prescaler choices available to be applied to the selected clock:

- Divide by 1
- Divide by 2
- Divide by 4
- Divide by 8

The clock source is selected with the PxCPRE<1:0> bits of the PSMCx Clock Control (PSMCxCLK) register (Register 24-6).

The prescaler output is psmc_clk, which is the clock used by all of the other portions of the PSMC module.

FIGURE 24-3: TIME BASE WAVEFORM GENERATION

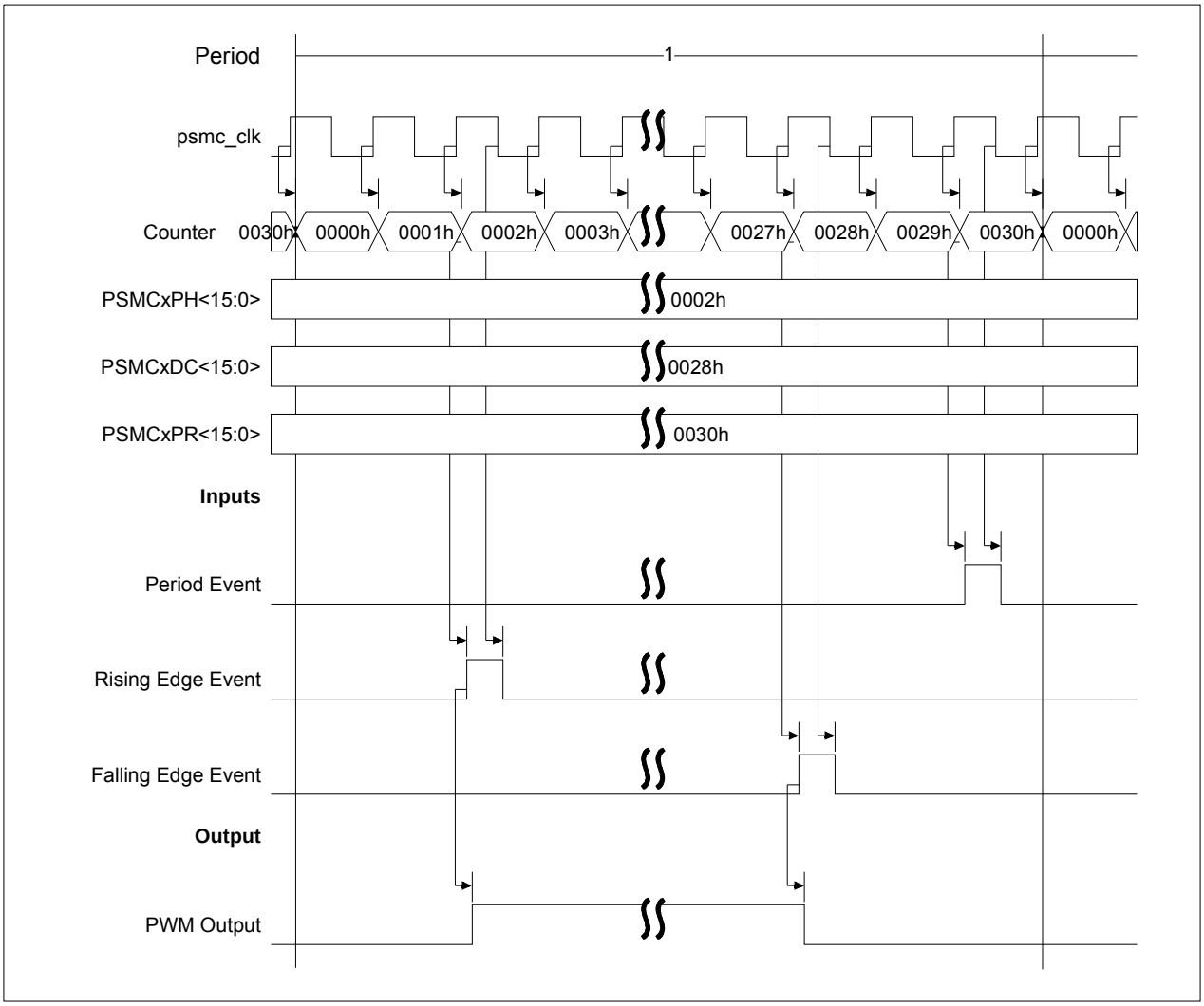

© 2012-2014 Microchip Technology Inc.

24.2.7 ASYNCHRONOUS INPUTS

The PSMC module supports asynchronous inputs alone or in combination with the synchronous inputs. asynchronous inputs include:

- Analog
  - sync_C1OUT
  - sync_C2OUT
  - sync_C3OUT
  - sync_C4OUT
- Digital
  - PSMCxIN pin

24.2.7.1 Comparator Inputs

The outputs of any combination of the synchronized comparators may be used to trigger any of the three events as well as auto-shutdown.

The event triggers on the rising edge of the comparator output. Except for auto-shutdown, the event input is not level sensitive.

24.2.7.2 PSMCxIN Pin Input

The PSMCxIN pin may be used to trigger PSMC events. Data is passed through straight to the PSMC module without any synchronization to a system clock. This is so that input blanking may be applied to any external circuit using the module.

The event triggers on the rising edge of the PSMCxIN signal.

24.2.7.3 Asynchronous Polarity

Polarity control is available for the period and duty-cycle asynchronous event inputs. Polarity control is necessary when the same signal is used as the source for both events. Inverting the polarity of one event relative to the other enables starting the period on one edge of the signal and terminating the duty-cycle on the opposite edge. Polarity is controlled with the PxPRPOL and PxDCPOL bits of the PSMCxSYNC register. Inverting the asynchronous input with these controls inverts all enabled asynchronous inputs for the corresponding event.

24.2.8 INPUT BLANKING

Input blanking is a function whereby the inputs from any selected asynchronous input may be driven inactive for a short period of time. This is to prevent electrical transients from the turn-on/off of power components from generating a false event.

Blanking is initiated by either or both:

- Rising event
- Falling event

Blanked inputs are suppressed from causing all asynchronous events, including:

- Rising
- Falling
- Period
- Shutdown

Rising edge and falling edge blanking are controlled independently. The following features are available for blanking:

- Blanking enable
- Blanking time counters
- Blanking mode

The following Blanking modes are available:

- Blanking disabled
- Immediate blanking

The Falling Edge Blanking mode is set with the PxFEBM<1:0> bits of the PSMCx Blanking Control (PSMCxBLNK) register (Register 24-9).

The Rising Edge Blanking mode is set with the PxREBM<1:0> bits of the PSMCx Blanking Control (PSMCxBLNK) register (Register 24-9).

24.2.8.1 Blanking Disabled

With blanking disabled, the asynchronous inputs are passed to the PSMC module without any intervention.

24.2.8.2 Immediate Blanking

With Immediate blanking, a counter is used to determine the blanking period. The desired blanking time is measured in psmc_clk periods. A rising edge event will start incrementing the rising edge blanking counter. A falling edge event will start incrementing the falling edge blanking counter.

The rising edge blanking time is set with the PSMC Rising Edge Blanking Time (PSMCxBLKR) register (Register 24-29). The inputs to be blanked are selected with the PSMC Rising Edge Blanked Source (PSMCxREBS) register (Register 24-10). During rising edge blanking, the selected blanked sources are suppressed for falling edge as well as rising edge, auto-shutdown and period events.

The falling edge blanking time is set with the PSMC Falling Edge Blanking Time (PSMCxBLKF) register (Register 24-30). The inputs to be blanked are selected with the PSMC Falling Edge Blanked Source (PSMCxFEBS) register (Register 24-11). During falling edge blanking, the selected blanked sources are suppressed for rising edge, as well as falling edge, auto-shutdown, and period events.

The blanking counters are incremented on the rising edge of psmc_clk. Blanked sources are suppressed until the counter value equals the blanking time register causing the blanking to terminate.

As the rising and falling edge events are from asynchronous inputs, there may be some uncertainty in the actual blanking time implemented in each cycle. The maximum uncertainty is equal to one psmc_clk period.

24.2.9 OUTPUT WAVEFORM GENERATION

The PSMC PWM output waveform is generated based upon the different input events. However, there are several other factors that affect the PWM waveshapes:

- Output Control
  - Output Enable
  - Output Polarity
- Waveform Mode Selection
- Dead-band Control
- Steering control

24.2.10 OUTPUT CONTROL

24.2.10.1 Output Pin Enable

Each PSMC PWM output pin has individual output enable control.

When the PSMC output enable control is disabled, the module asserts no control over the pin. In this state, the pin can be used for general purpose I/O or other associate peripheral use.

When the PSMC output enable is enabled, the active PWM waveform is applied to the pin per the port priority selection.

PSMC output enable selections are made with the PSMC Output Enable Control (PSMCxOEN) register (Register 24-7).

24.2.10.2 Output Steering

PWM output will be presented only on pins for which output steering is enabled. The PSMC has up to six PWM outputs. The PWM signal in some modes can be steered to one or more of these outputs.

Steering differs from output enable in the following manner: When the output is enabled but the PWM steering to the corresponding output is not enabled, then general purpose output to the pin is disabled and the pin level will remain constantly in the inactive PWM state. Output steering is controlled with the PSMCS Steering Control 0 (PSMCxSTR0) register (Register 24-31).

Steering operates only in the following modes:

- Single-phase
- Complementary Single-phase
- 3-phase 6-step PWM

24.2.10.3 Polarity Control

Each PSMC output has individual output polarity control. Polarity is set with the PSMC Polarity Control (PSMCxPOL) register (Register 24-8).

24.3 Modes of Operation

All modes of operation use the period, rising edge, and falling edge events to generate the various PWM output waveforms.

The 3-phase 6-step PWM mode makes special use of the software controlled steering to generate the required waveform.

Modes of operation are selected with the PSMC Control (PSMCxCON) register (Register 24-1).

24.3.1 SINGLE-PHASE MODE

The single PWM is the most basic of all the waveshapes generated by the PSMC module. It consists of a single output that uses all three events (rising edge, falling edge and period events) to generate the waveform.

24.3.1.1 Mode Features

- No dead-band control available
- PWM can be steered to any combination of the following PSMC outputs:
  - PSMCxA
  - PSMCxB
  - PSMCxC
  - PSMCxD
  - PSMCxE
  - PSMCxF
- Identical PWM waveform is presented to all pins for which steering is enabled.

24.3.1.2 Waveform Generation

<u>Rising Edge Event</u>

- All outputs with PxSTR enabled are set to the active state

<u>Falling Edge Event</u>

- All outputs with PxSTR enabled are set to the inactive state

Code for setting up the PSMC generate the single-phase waveform shown in Figure 24-4, and given in Example 24-1.

© 2012-2014 Microchip Technology Inc.

EXAMPLE 24-1: SINGLE-PHASE SETUP

```
; Single-phase PWM PSMC setup
; Fully synchronous operation
; Period = 10 us
; Duty cycle = 50%
   BANKSEL PSMC1CON
   MOVLW   0x02       ; set period
   MOVWF   PSMC1PRH
   MOVLW   0x7F
   MOVWF   PSMC1PRL
   MOVLW   0x01       ; set duty cycle
   MOVWF   PSMC1DCH
   MOVLW   0x3F
   MOVWF   PSMC1DCL
   CLRF    PSMC1PHH   ; no phase offset
   CLRF    PSMC1PHL
   MOVLW   0x01       ; PSMC clock=64 MHz
   MOVWF   PSMC1CLK
; output on A, normal polarity
   BSF     PSMC1STR0,P1STRA
   BCF     PSMC1POL, P1POLA
   BSF     PSMC1OEN, P1OEA
; set time base as source for all events
   BSF     PSMC1PRS, P1PRST
   BSF     PSMC1PHS, P1PHST
   BSF     PSMC1DCS, P1DCST
; enable PSMC in Single-Phase Mode
; this also loads steering and time buffers
   MOVLW   B’11000000’
   MOVWF   PSMC1CON
   BANKSEL TRISC
   BCF     TRISC, 0   ; enable pin driver
```

FIGURE 24-4: SINGLE PWM WAVEFORM – PSMCXSTR0 = 01H

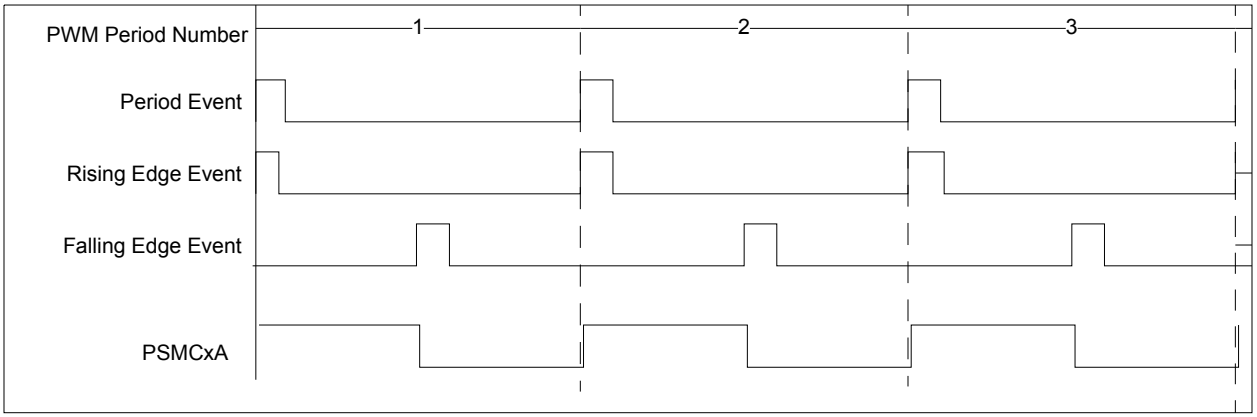

24.3.2 COMPLEMENTARY PWM

The complementary PWM uses the same events as the single PWM, but two waveforms are generated instead of only one.

The two waveforms are opposite in polarity to each other. The two waveforms may also have dead-band control as well.

24.3.2.1 Mode Features and Controls

- Dead-band control available
- PWM primary output can be steered to the following pins:
  - PSMCxA
  - PSMCxC
  - PSMCxE
- PWM complementary output can be steered to the following pins:
  - PSMCxB
  - PSMCxD
  - PSMCxE

24.3.2.2 Waveform Generation

Rising Edge Event

- Complementary output is set inactive
- Optional rising edge dead band is activated
- Primary output is set active

Falling Edge Event

- Primary output is set inactive
- Optional falling edge dead band is activated
- Complementary output is set active

Code for setting up the PSMC generate the complementary single-phase waveform shown in Figure 24-5, and given in Example 24-2.

EXAMPLE 24-2: COMPLEMENTARY SINGLE-PHASE SETUP

```
; Complementary Single-phase PWM PSMC setup
; Fully synchronous operation
; Period = 10 us
; Duty cycle = 50%
; Deadband = 93.75 +15.6/-0 ns
   BANKSEL PSMC1CON
   MOVLW   0x02        ; set period
   MOVWF   PSMC1PRH
   MOVLW   0x7F
   MOVWF   PSMC1PRL
   MOVLW   0x01        ; set duty cycle
   MOVWF   PSMC1DCH
   MOVLW   0x3F
   MOVWF   PSMC1DCL
   CLRF    PSMC1PHH    ; no phase offset
   CLRF    PSMC1PHL
   MOVLW   0x01        ; PSMC clock=64 MHz
   MOVWF   PSMC1CLK
; output on A, normal polarity
   MOVLW   B'00000011'; A and B enables
   MOVWF   PSMC1OEN
   MOVWF   PSMC1STR0
   CLRF    PSMC1POL
; set time base as source for all events
   BSF     PSMC1PRS, P1PRST
   BSF     PSMC1PHS, P1PHST
   BSF     PSMC1DCS, P1DCST
; set rising and falling dead-band times
   MOVLW   D'6'
   MOVWF   PSMC1DBR
   MOVWF   PSMC1DBF
; enable PSMC in Complementary Single Mode
; this also loads steering and time buffers
; and enables rising and falling deadbands
   MOVLW   B'11110001'
   MOVWF   PSMC1CON
   BANKSEL TRISC
   BCF     TRISC, 0    ; enable pin drivers
   BCF     TRISC, 1
```

FIGURE 24-5: COMPLEMENTARY PWM WAVEFORM – PSMCXSTR0 = 03H

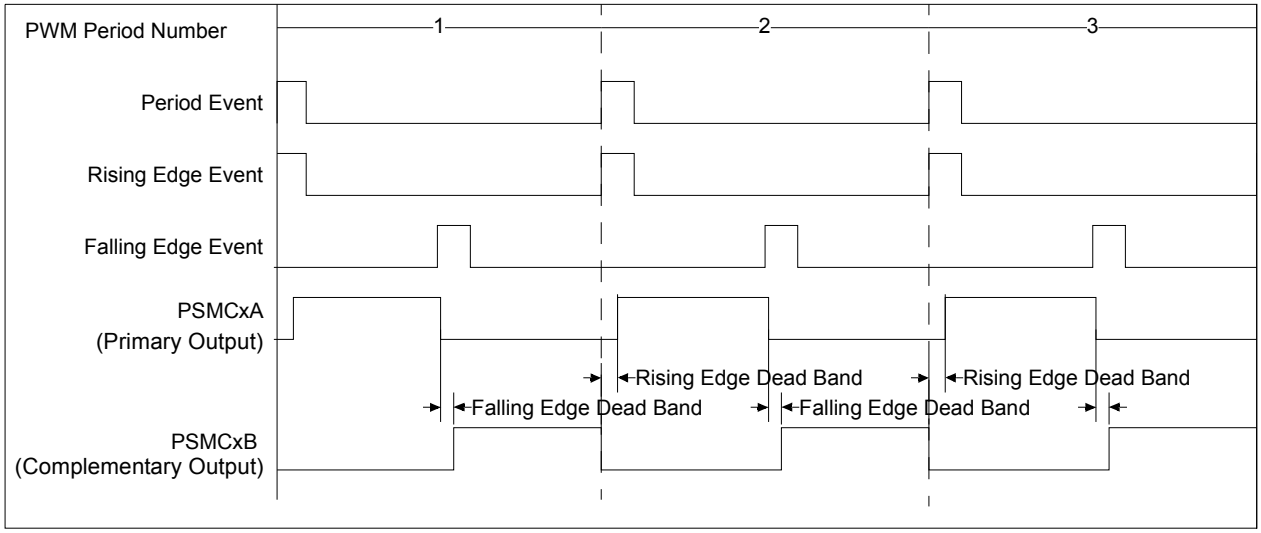

© 2012-2014 Microchip Technology Inc.

24.3.3 PUSH-PULL PWM

The push-pull PWM is used to drive transistor bridge circuits. It uses at least two outputs and generates PWM signals that alternate between the two outputs in even and odd cycles.

Variations of the push-pull waveform include four outputs with two outputs being complementary or two sets of two identical outputs. Refer to Sections 24.3.4 through 24.3.6 for the other Push-Pull modes.

24.3.3.1 Mode Features

- No dead-band control available
- No steering control available
- Output is on the following two pins only:
  - PSMCxA
  - PSMCxB

Note: This is a subset of the 6-pin output of the push-pull PWM output, which is why pin functions are fixed in these positions, so they are compatible with that mode. See **Section 24.3.6 "Push-Pull PWM with Four Full-Bridge and Complementary Outputs"**

24.3.3.2 Waveform Generation

Odd numbered period rising edge event:

- PSMCxA is set active

Odd numbered period falling edge event:

- PSMCxA is set inactive

Even numbered period rising edge event:

- PSMCxB is set active

Even numbered period falling edge event:

- PSMCxB is set inactive

Code for setting up the PSMC generate the complementary single-phase waveform shown in Figure 24-6, and given in Example 24-3.

EXAMPLE 24-3: PUSH-PULL SETUP

```
; Push-Pull PWM PSMC setup
; Fully synchronous operation
; Period = 10 us
; Duty cycle = 50% (25% each phase)
   BANKSEL  PSMC1CON
   MOVLW    0x02        ; set period
   MOVWF    PSMC1PRH
   MOVLW    0x7F
   MOVWF    PSMC1PRL
   MOVLW    0x01        ; set duty cycle
   MOVWF    PSMC1DCH
   MOVLW    0x3F
   MOVWF    PSMC1DCL
   CLRF     PSMC1PHH    ; no phase offset
   CLRF     PSMC1PHL
   MOVLW    0x01        ; PSMC clock=64 MHz
   MOVWF    PSMC1CLK
; output on A and B, normal polarity
   MOVLW    B'00000011'
   MOVWF    PSMC1OEN
   CLRF     PSMC1POL
; set time base as source for all events
   BSF      PSMC1PRS, P1PRST
   BSF      PSMC1PHS, P1PHST
   BSF      PSMC1DCS, P1DCST
; enable PSMC in Push-Pull Mode
; this also loads steering and time buffers
   MOVLW    B'11000010'
   MOVWF    PSMC1CON
   BANKSEL  TRISC
   BCF      TRISC, 0    ; enable pin drivers
   BCF      TRISC, 1
```

FIGURE 24-6: PUSH-PULL PWM WAVEFORM

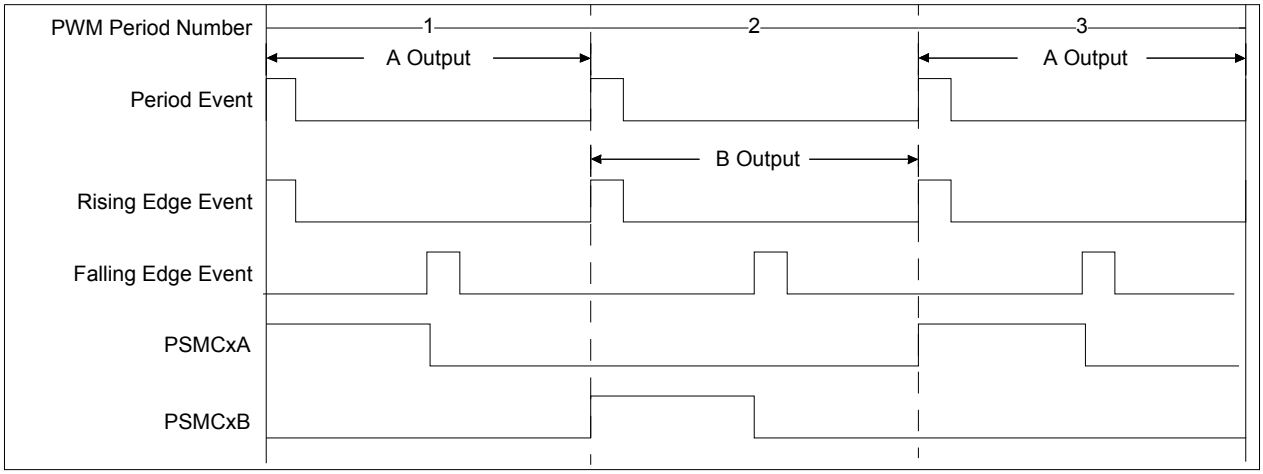

24.3.4 PUSH-PULL PWM WITH COMPLEMENTARY OUTPUTS

The complementary push-pull PWM is used to drive transistor bridge circuits as well as synchronous switches on the secondary side of the bridge. The PWM waveform is output on four pins presented as two pairs of two-output signals with a normal and complementary output in each pair. Dead band can be inserted between the normal and complementary outputs at the transition times.

24.3.4.1 Mode Features

- Dead-band control is available
- No steering control available
- Primary PWM output is only on:
  - PSMCxA
  - PSMCxB
- Complementary PWM output is only on:
  - PSMCxE
  - PSMCxF

Note: This is a subset of the 6-pin output of the push-pull PWM output, which is why pin functions are fixed in these positions, so they are compatible with that mode. See **Section 24.3.6 "Push-Pull PWM with Four Full-Bridge and Complementary Outputs"**.

24.3.4.2 Waveform Generation

Push-Pull waveforms generate alternating outputs on the output pairs. Therefore, there are two sets of rising edge events and two sets of falling edge events

Odd numbered period rising edge event:

- PSMCxE is set inactive
- Dead-band rising is activated (if enabled)
- PSMCxA is set active

Odd numbered period falling edge odd event:

- PSMCxA is set inactive
- Dead-band falling is activated (if enabled)
- PSMCxE is set active

Even numbered period rising edge event:

- PSMCxF is set inactive
- Dead-band rising is activated (if enabled)
- PSMCxB is set active

Even numbered period falling edge event:

- PSMCxB is set inactive
- Dead-band falling is activated (if enabled)
- PSMCxF is set active

FIGURE 24-7: PUSH-PULL WITH COMPLEMENTARY OUTPUTS PWM WAVEFORM

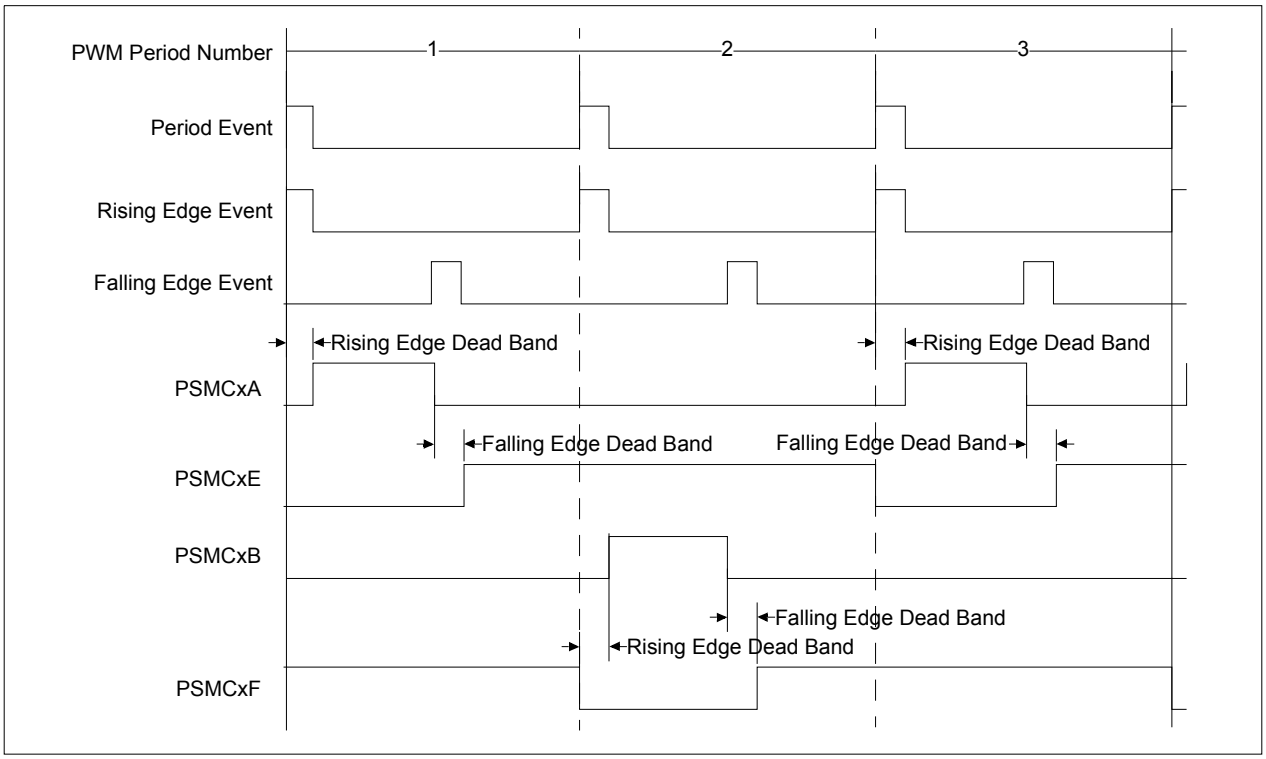

© 2012-2014 Microchip Technology Inc.

24.3.5 PUSH-PULL PWM WITH FOUR FULL-BRIDGE OUTPUTS

The full-bridge push-pull PWM is used to drive transistor bridge circuits as well as synchronous switches on the secondary side of the bridge.

24.3.5.1 Mode Features

- No Dead-band control
- No Steering control available
- PWM is output on the following four pins only:
  - PSMCxA
  - PSMCxB
  - PSMCxC
  - PSMCxD

Note: PSMCxA and PSMCxC are identical waveforms, and PSMCxB and PSMCxD are identical waveforms.

Note: This is a subset of the 6-pin output of the push-pull PWM output, which is why pin functions are fixed in these positions, so they are compatible with that mode. See **Section 24.3.6 "Push-Pull PWM with Four Full-Bridge and Complementary Outputs"**.

24.3.5.2 Waveform generation

Push-pull waveforms generate alternating outputs on the output pairs. Therefore, there are two sets of rising edge events and two sets of falling edge events.

Odd numbered period rising edge event:

- PSMCxOUT0 and PSMCxOUT2 is set active

Odd numbered period falling edge event:

- PSMCxOUT0 and PSMCxOUT2 is set inactive

Even numbered period rising edge event:

- PSMCxOUT1 and PSMCxOUT3 is set active

Even numbered period falling edge event:

- PSMCxOUT1 and PSMCxOUT3 is set inactive

FIGURE 24-8: PUSH-PULL PWM WITH 4 FULL-BRIDGE OUTPUTS

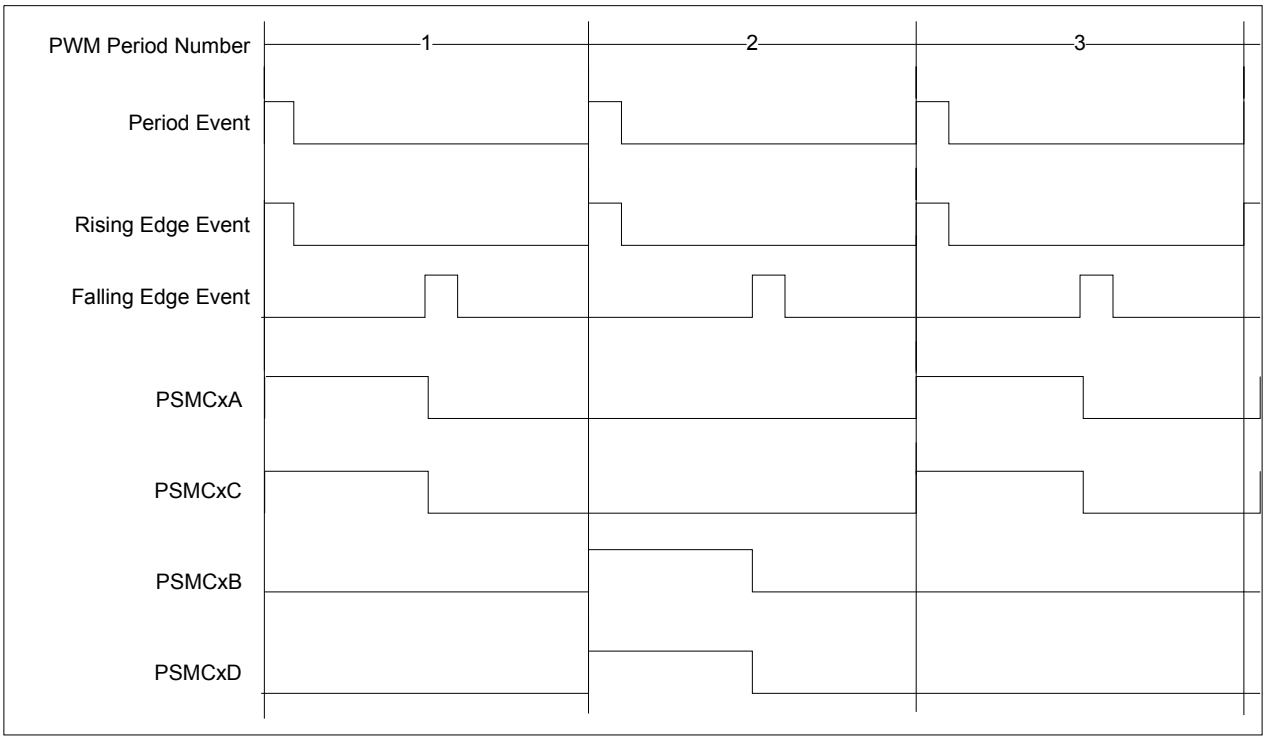

24.3.6 PUSH-PULL PWM WITH FOUR FULL-BRIDGE AND COMPLEMENTARY OUTPUTS

The push-pull PWM is used to drive transistor bridge circuits as well as synchronous switches on the secondary side of the bridge. It uses six outputs and generates PWM signals with dead band that alternate between the six outputs in even and odd cycles.

24.3.6.1 Mode Features and Controls

- Dead-band control is available
- No steering control available
- Primary PWM is output on the following four pins:
  - PSMCxA
  - PSMCxB
  - PSMCxC
  - PSMCxD
- Complementary PWM is output on the following two pins:
  - PSMCxE
  - PSMCxF

Note: PSMCxA and PSMCxC are identical waveforms, and PSMCxB and PSMCxD are identical waveforms.

24.3.6.2 Waveform Generation

Push-pull waveforms generate alternating outputs on two sets of pin. Therefore, there are two sets of rising edge events and two sets of falling edge events

Odd numbered period rising edge event:

- PSMCxE is set inactive
- Dead-band rising is activated (if enabled)
- PSMCxA and PSMCxC are set active

Odd numbered period falling edge event:

- PSMCxA and PSMCxC are set inactive
- Dead-band falling is activated (if enabled)
- PSMCxE is set active

Even numbered period rising edge event:

- PSMCxF is set inactive
- Dead-band rising is activated (if enabled)
- PSMCxB and PSMCxD are set active

Even numbered period falling edge event:

- PSMCxB and PSMCxOUT3 are set inactive
- Dead-band falling is activated (if enabled)
- PSMCxF is set active

FIGURE 24-9: PUSH-PULL 4 FULL-BRIDGE AND COMPLEMENTARY PWM

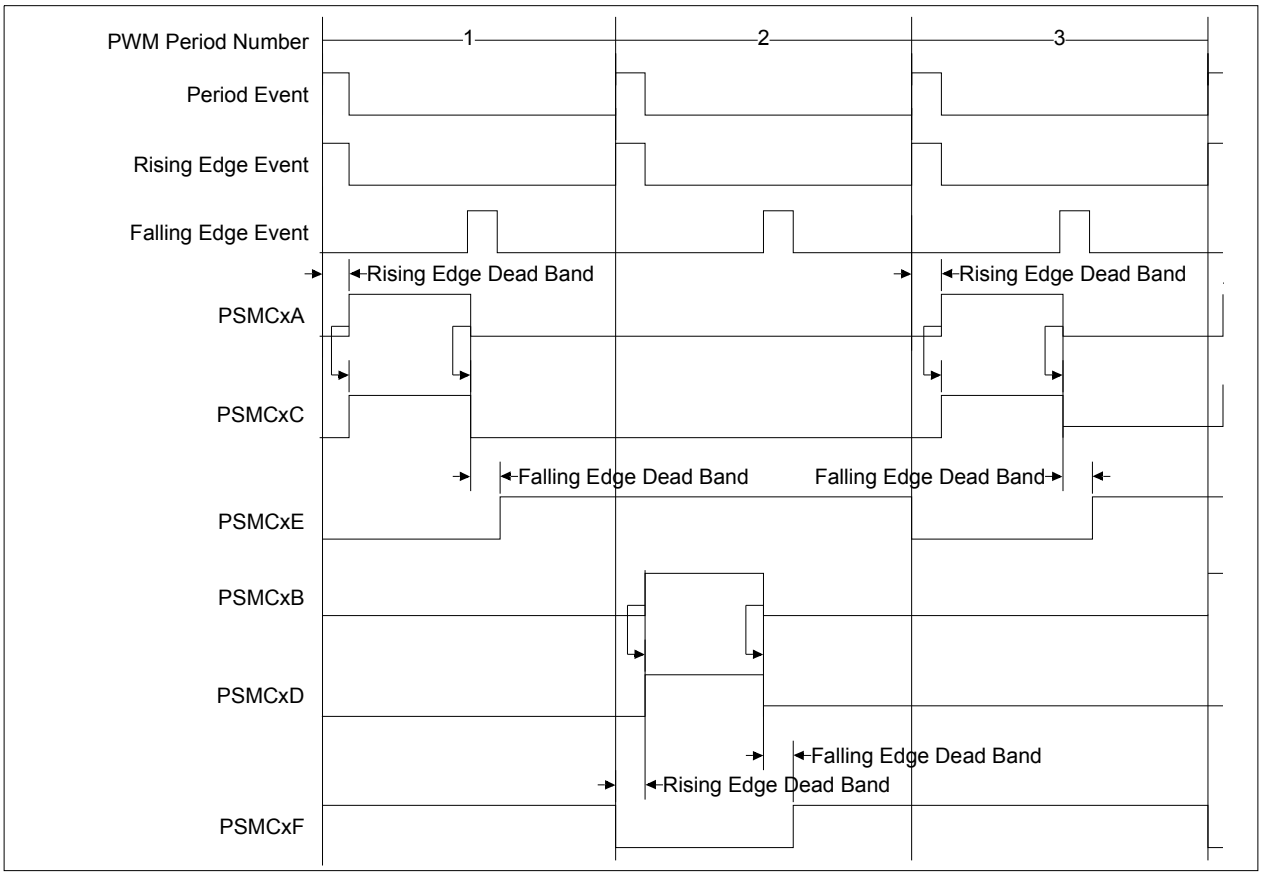

© 2012-2014 Microchip Technology Inc.

24.3.7 PULSE-SKIPPING PWM

The pulse-skipping PWM is used to generate a series of fixed-length pulses that can be triggered at each period event. A rising edge event will be generated when any enabled asynchronous rising edge input is active when the period event occurs, otherwise no event will be generated.

The rising edge event occurs based upon the value in the PSMCxPH register pair.

The falling edge event always occurs according to the enabled event inputs without qualification between any two inputs.

24.3.7.1 Mode Features

- No dead-band control available
- No steering control available
- PWM is output to only one pin:
  - PSMCxA

24.3.7.2 Waveform Generation

Rising Edge Event

If any enabled asynchronous rising edge event = 1 when there is a period event, then upon the next synchronous rising edge event:

- PSMCxA is set active

Falling Edge Event

- PSMCxA is set inactive

> **Note:** To use this mode, an external source must be used for the determination of whether or not to generate the set pulse. If the phase time base is used, it will either always generate a pulse or never generate a pulse based on the PSMCxPH value.

FIGURE 24-10: PULSE-SKIPPING PWM WAVEFORM

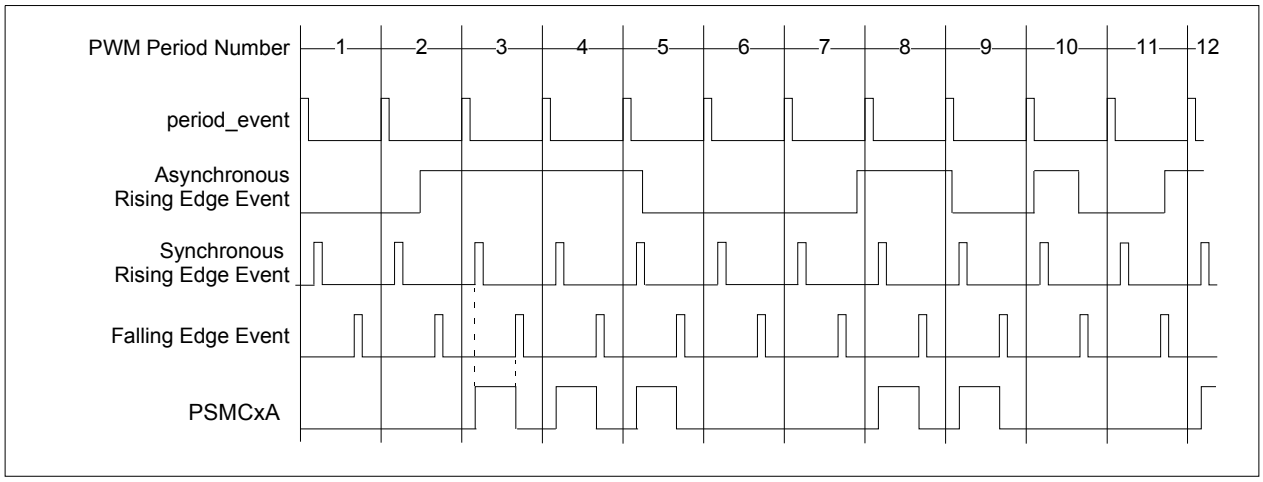

24.3.8 PULSE-SKIPPING PWM WITH COMPLEMENTARY OUTPUTS

The pulse-skipping PWM is used to generate a series of fixed-length pulses that may or not be triggered at each period event. If any of the sources enabled to generate a rising edge event are high when a period event occurs, a pulse will be generated. If the rising edge sources are low at the period event, no pulse will be generated.

The rising edge occurs based upon the value in the PSMCxPH register pair.

The falling edge event always occurs according to the enabled event inputs without qualification between any two inputs.

24.3.8.1 Mode Features

- Dead-band control is available
- No steering control available
- Primary PWM is output on only PSMCxA.
- Complementary PWM is output on only PSMCxB.

24.3.8.2 Waveform Generation

Rising Edge Event

If any enabled asynchronous rising edge event = 1 when there is a period event, then upon the next synchronous rising edge event:

- Complementary output is set inactive
- Dead-band rising is activated (if enabled)
- Primary output is set active

Falling Edge Event

- Primary output is set inactive
- Dead-band falling is activated (if enabled)
- Complementary output is set active

Note: To use this mode, an external source must be used for the determination of whether or not to generate the set pulse. If the phase time base is used, it will either always generate a pulse or never generate a pulse based on the PSMCxPH value.

FIGURE 24-11: PULSE-SKIPPING WITH COMPLEMENTARY OUTPUT PWM WAVEFORM

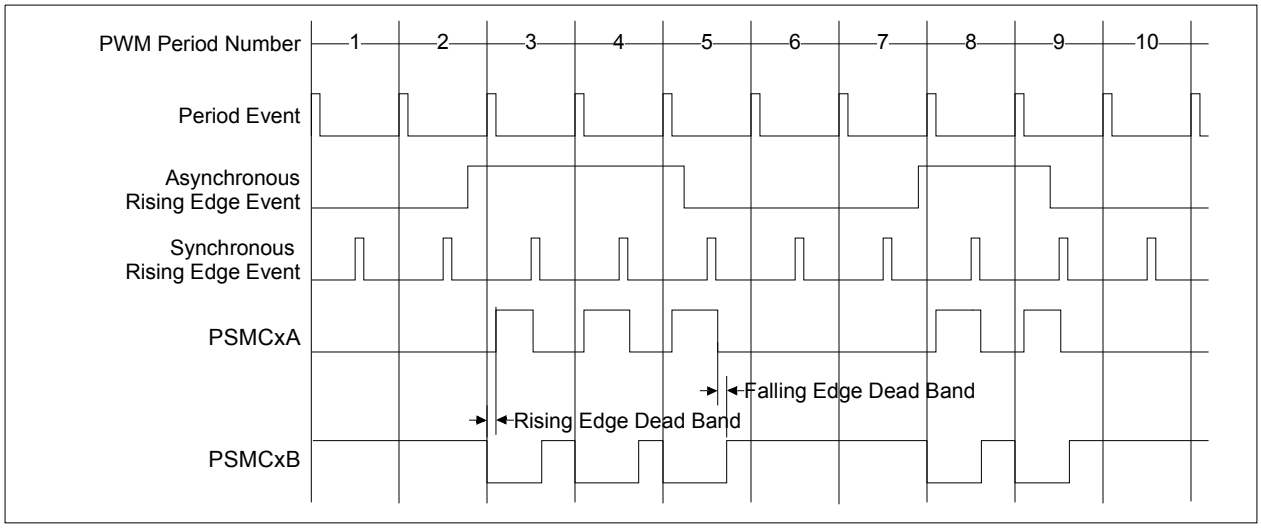

© 2012-2014 Microchip Technology Inc.

24.3.9 ECCP COMPATIBLE FULL-BRIDGE PWM

This mode of operation is designed to match the Full-Bridge mode from the ECCP module. It is called ECCP compatible as the term “full-bridge” alone has different connotations in regards to the output waveforms.

Full-Bridge Compatible mode uses the same waveform events as the single PWM mode to generate the output waveforms.

There are both Forward and Reverse modes available for this operation, again to match the ECCP implementation. Direction is selected with the mode control bits.

24.3.9.1 Mode Features

- Dead-band control available on direction switch
  - Changing from forward to reverse uses the falling edge dead-band counters.
  - Changing from reverse to forward uses the rising edge dead-band counters.
- No steering control available
- PWM is output on the following four pins only:
  - PSMCxA
  - PSMCxB
  - PSMCxC
  - PSMCxD

24.3.9.2 Waveform Generation - Forward

In this mode of operation, three of the four pins are static. PSMCxA is the only output that changes based on rising edge and falling edge events.

Static Signal Assignment

- Outputs set to active state
  - PSMCxD
- Outputs set to inactive state
  - PSMCxB
  - PSMCxC

Rising Edge Event

- PSMCxA is set active

Falling Edge Event

- PSMCxA is set inactive

24.3.9.3 Waveform Generation – Reverse

In this mode of operation, three of the four pins are static. Only PSMCxB toggles based on rising edge and falling edge events.

Static Signal Assignment

- Outputs set to active state
  - PSMCxC
- Outputs set to inactive state
  - PSMCxA
  - PSMCxD

Rising Edge Event

- PSMCxB is set active

Falling Edge Event

- PSMCxB is set inactive

FIGURE 24-12: ECCP COMPATIBLE FULL-BRIDGE PWM WAVEFORM – PSMCXSTR0 = 0FH

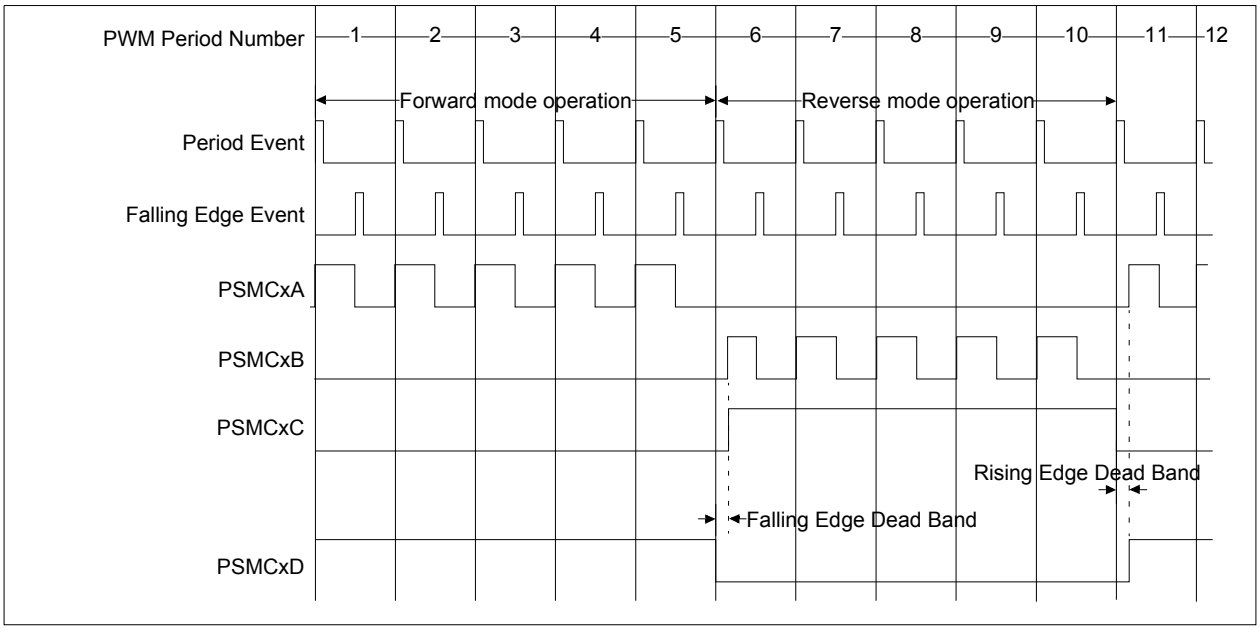

24.3.10 VARIABLE FREQUENCY – FIXED DUTY CYCLE PWM

This mode of operation is quite different from all of the other modes. It uses only the period event for waveform generation. At each period event, the PWM output is toggled.

The rising edge and falling edge events are unused in this mode.

24.3.10.1 Mode Features

- No dead-band control available
- No steering control available
- Fractional Frequency Adjust
  - Fine period adjustments are made with the PSMC Fractional Frequency Adjust (PSMCxFFA) register (Register 24-28)
- PWM is output on the following pin only:
  - PSMCxA

24.3.10.2 Waveform Generation

Period Event

- Output of PSMCxA is toggled
- FFA counter is incremented by the 4-bit value in PSMCxF FA

FIGURE 24-13: VARIABLE FREQUENCY – FIXED DUTY CYCLE PWM WAVEFORM

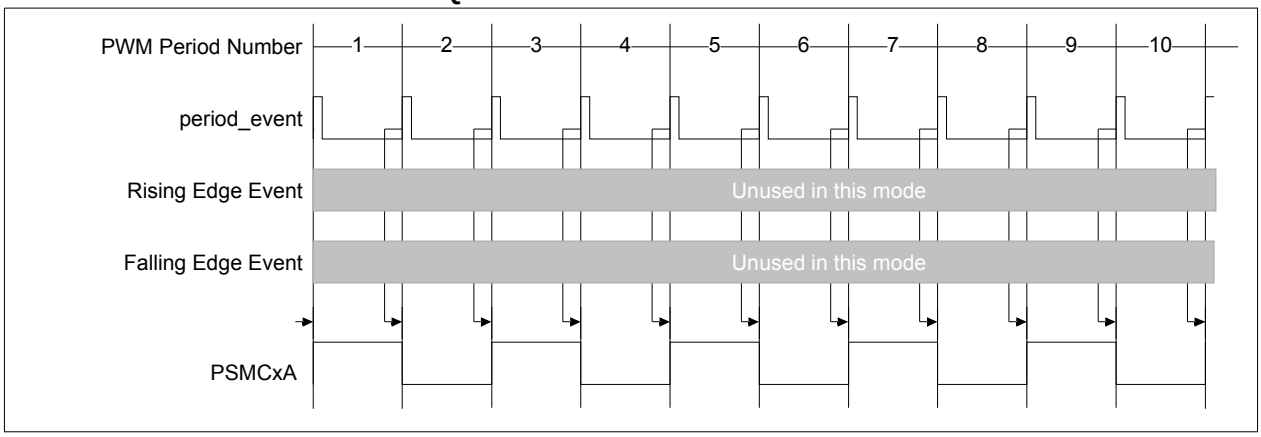

© 2012-2014 Microchip Technology Inc.

24.3.11 VARIABLE FREQUENCY - FIXED DUTY CYCLE PWM WITH COMPLEMENTARY OUTPUTS

This mode is the same as the single output Fixed Duty Cycle mode except a complementary output with dead-band control is generated.

The rising edge and falling edge events are unused in this mode. Therefore, a different triggering mechanism is required for the dead-band counters.

A period events that generate a rising edge on PSMCxA use the rising edge dead-band counters.

A period events that generate a falling edge on PSMCxA use the falling edge dead-band counters.

24.3.11.1 Mode Features

- Dead-band control is available
- No steering control available
- Fractional Frequency Adjust
  - Fine period adjustments are made with the PSMC Fractional Frequency Adjust (PSMCxFFA) register (Register 24-28)
- Primary PWM is output to the following pin:
  - PSMCxA
- Complementary PWM is output to the following pin:
  - PSMCxB

24.3.11.2 Waveform Generation

Period Event

When output is going inactive to active:

- Complementary output is set inactive
- FFA counter is incremented by the 4-bit value in PSMCFFA register.
- Dead-band rising is activated (if enabled)
- Primary output is set active

When output is going active to inactive:

- Primary output is set inactive
- FFA counter is incremented by the 4-bit value in PSMCFFA register
- Dead-band falling is activated (if enabled)
- Complementary output is set active

FIGURE 24-14: VARIABLE FREQUENCY – FIXED DUTY CYCLE PWM WITH COMPLEMENTARY OUTPUTS WAVEFORM

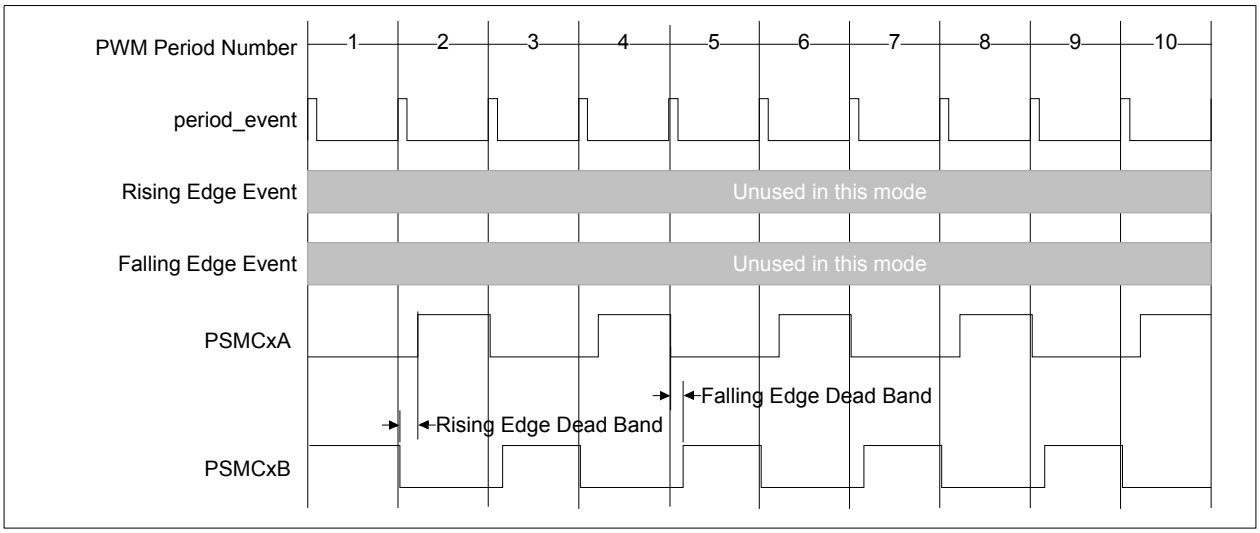

24.3.12 3-PHASE PWM

The 3-Phase mode of operation is used in 3-phase power supply and motor drive applications configured as three half-bridges. A half-bridge configuration consists of two power driver devices in series, between the positive power rail (high side) and negative power rail (low side). The three outputs come from the junctions between the two drivers in each half-bridge. When the steering control selects a phase drive, power flows from the positive rail through a high-side power device to the load and back to the power supply through a low-side power device.

In this mode of operation, all six PSMC outputs are used, but only two are active at a time.

The two active outputs consist of a high-side driver and low-side driver output.

24.3.12.1 Mode Features

- No dead-band control is available
- PWM can be steered to the following six pairs:
  - PSMCxA and PSMCxD
  - PSMCxA and PSMCxF
  - PSMCxC and PSMCxF
  - PSMCxC and PSMCxB
  - PSMCxE and PSMCxB
  - PSMCxE and PSMCxD

24.3.12.2 Waveform Generation

3-phase steering has a more complex waveform generation scheme than the other modes. There are several factors which go into what waveforms are created.

The PSMC outputs are grouped into three sets of drivers: one for each phase. Each phase has two associated PWM outputs: one for the high-side drive and one for the low-side drive.

High Side drives are indicated by 1H, 2H and 3H.

Low Side drives are indicated by 1L, 2L, 3L.

Phase grouping is mapped as shown in Table 24-1. There are six possible phase drive combinations. Each phase drive combination activates two of the six outputs and deactivates the other four. Phase drive is selected with the steering control as shown in Table 24-2.

TABLE 24-1: PHASE GROUPING

PSMC grouping	
PSMCxA	1H
PSMCxB	1L
PSMCxC	2H
PSMCxD	2L
PSMCxE	3H
PSMCxF	3L

TABLE 24-2: 3-PHASE STEERING CONTROL

		PSMCxSTR0 Value(1)						
PSMC outputs		**00h**	**01h**	**02h**	**04h**	**08h**	**10h**	**20h**
PSMCxA	1H	inactive	**active**	**active**	inactive	inactive	inactive	inactive
PSMCxB	1L	inactive	inactive	inactive	inactive	**active**	**active**	inactive
PSMCxC	2H	inactive	inactive	inactive	**active**	**active**	inactive	inactive
PSMCxD	2L	inactive	**active**	inactive	inactive	inactive	inactive	**active**
PSMCxE	3H	inactive	inactive	inactive	inactive	inactive	**active**	**active**
PSMCxF	3L	inactive	inactive	**active**	**active**	inactive	inactive	inactive

Note 1: Steering for any value other than those shown will default to the output combination of the Least Significant steering bit that is set.

High/Low Side Modulation Enable

It is also possible to enable the PWM output on the low side or high side drive independently using the PxLSMEN and PXHSMEN bits of the PSMC Steering Control 1 (PSMCxSTR1) register (Register 24-32).

When the PxHSMEN bit is set, the active-high side output listed in Table 24-2 is modulated using the normal rising edge and falling edge events.

When the PxLSMEN bit is set, the active-low side output listed in Table 24-2 is modulated using the normal rising edge and falling edge events.

When both the PxHSMEN and PxLSMEN bits are cleared, the active outputs listed in Table 24-2 go immediately to the rising edge event states and do not change.

Rising Edge Event

- Active outputs are set to their active states

Falling Edge Event

- Active outputs are set to their inactive state

© 2012-2014 Microchip Technology Inc.

FIGURE 24-15: 3-PHASE PWM STEERING WAVEFORM (PXHSMEN = 0 AND PXLSMEN = 1)

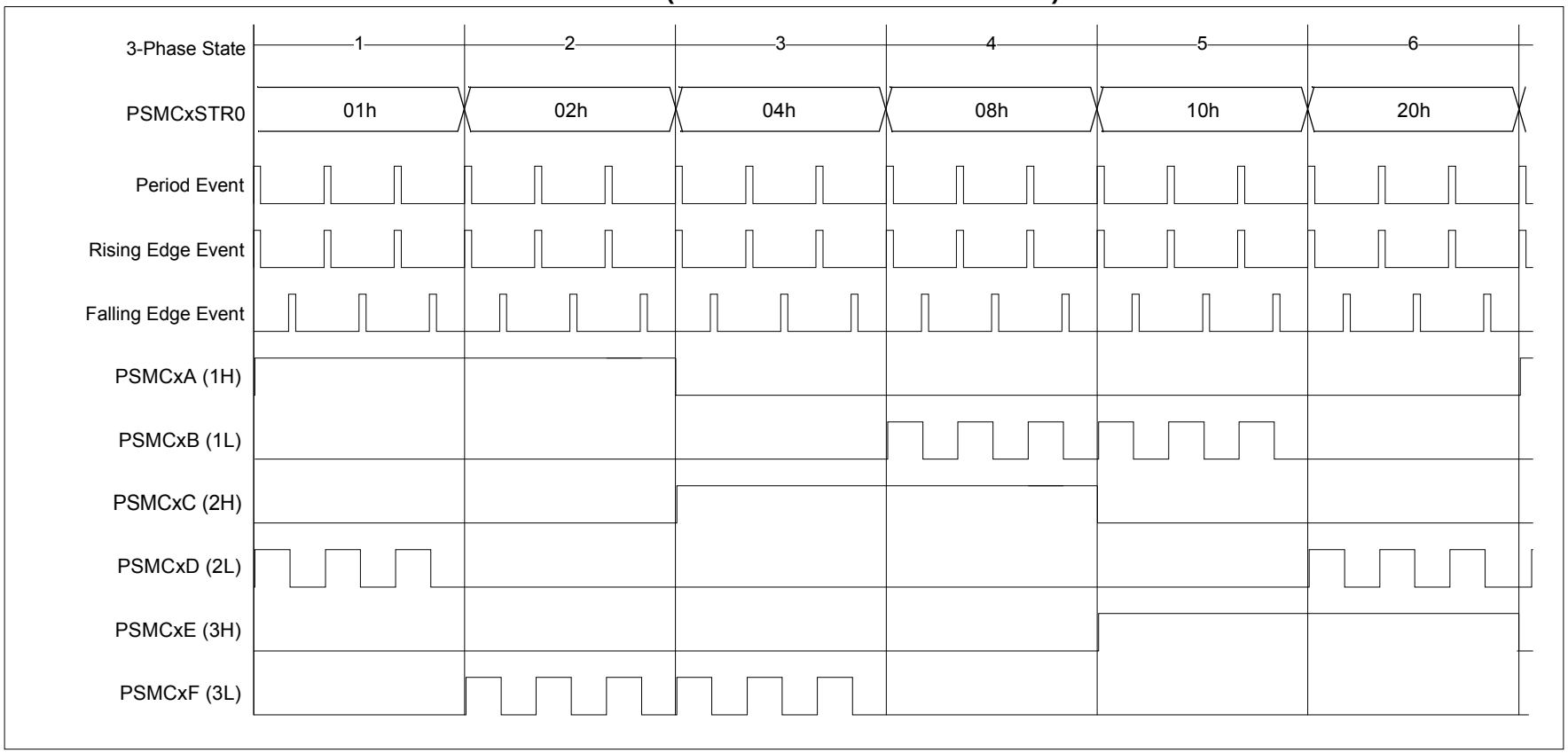

© 2012-2014 Microchip Technology Inc.

24.4 Dead-Band Control

The dead-band control provides non-overlapping PWM signals to prevent shoot-through current in series connected power switches. Dead-band control is available only in modes with complementary drive and when changing direction in the ECCP compatible Full-Bridge modes.

The module contains independent 8-bit dead-band counters for rising edge and falling edge dead-band control.

24.4.1 DEAD-BAND TYPES

There are two separate dead-band generators available, one for rising edge events and the other for falling edge events.

24.4.1.1 Rising Edge Dead Band

Rising edge dead-band control is used to delay the turn-on of the primary switch driver from when the complementary switch driver is turned off.

Rising edge dead band is initiated with the rising edge event.

Rising edge dead-band time is adjusted with the PSMC Rising Edge Dead-Band Time (PSMCxDBR) register (Register 24-26).

If the PSMCxDBR register value is changed when the PSMC is enabled, the new value does not take effect until the first period event after the PSMCxLD bit is set.

24.4.1.2 Falling Edge Dead Band

Falling edge dead-band control is used to delay the turn-on of the complementary switch driver from when the primary switch driver is turned off.

Falling edge dead band is initiated with the falling edge event.

Falling edge dead-band time is adjusted with the PSMC Falling Edge Dead-Band Time (PSMCxDBF) register (Register 24-27).

If the PSMCxDBF register value is changed when the PSMC is enabled, the new value does not take effect until the first period event after the PSMCxLD bit is set.

24.4.2 DEAD-BAND ENABLE

When a mode is selected that may use dead-band control, dead-band timing is enabled by setting one of the enable bits in the PSMC Control (PSMCxCON) register (Register 24-1).

Rising edge dead band is enabled with the PxDBRE bit.

Rising edge dead band is enabled with the PxDBFE bit.

Enable changes take effect immediately.

24.4.3 DEAD-BAND CLOCK SOURCE

The dead-band counters are incremented on every rising edge of the psmc_clk signal.

24.4.4 DEAD-BAND UNCERTAINTY

When the rising and falling edge events that trigger the dead-band counters come from asynchronous inputs, there will be uncertainty in the actual dead-band time of each cycle. The maximum uncertainty is equal to one psmc_clk period. The one clock of uncertainty may still be introduced, even when the dead-band count time is cleared to zero.

24.4.5 DEAD-BAND OVERLAP

There are two cases of dead-band overlap and each is treated differently due to system requirements.

24.4.5.1 Rising to Falling Overlap

In this case, the falling edge event occurs while the rising edge dead-band counter is still counting. The following sequence occurs:

1. Dead-band rising count is terminated.
2. Dead-band falling count is initiated.
3. Primary output is suppressed.

24.4.5.2 Falling to Rising Overlap

In this case, the rising edge event occurs while the falling edge dead-band counter is still counting. The following sequence occurs:

1. Dead-band falling count is terminated.
2. Dead-band rising count is initiated.
3. Complementary output is suppressed.

24.4.5.3 Rising Edge-to-Rising Edge or Falling Edge-to-Falling Edge

In cases where one of the two dead-band counters is set for a short period, or disabled all together, it is possible to get rising-to-rising or falling-to-falling overlap. When this is the case, the following sequence occurs:

1. Dead-band count is terminated.
2. Dead-band count is restarted.
3. Output waveform control freezes in the present state.
4. Restarted dead-band count completes.
5. Output control resumes normally.

© 2012-2014 Microchip Technology Inc.

24.5 Output Steering

Output steering allows for PWM signals generated by the PSMC module to be placed on different pins under software control. Synchronized steering will hold steering changes until the first period event after the PSMCxLD bit is set. Unsynchronized steering changes will take place immediately.

Output steering is available in the following modes:

- 3-phase PWM
- Single PWM
- Complementary PWM

24.5.1 3-PHASE STEERING

3-phase steering is available in the 3-Phase Modulation mode only. For more details on 3-phase steering refer to **Section 24.3.12 "3-Phase PWM"**.

24.5.2 SINGLE PWM STEERING

In Single PWM Steering mode, the single PWM signal can be routed to any combination of the PSMC output pins. Examples of unsynchronized single PWM steering are shown in Figure 24-16.

FIGURE 24-16: SINGLE PWM STEERING WAVEFORM (NO SYNCHRONIZATION)

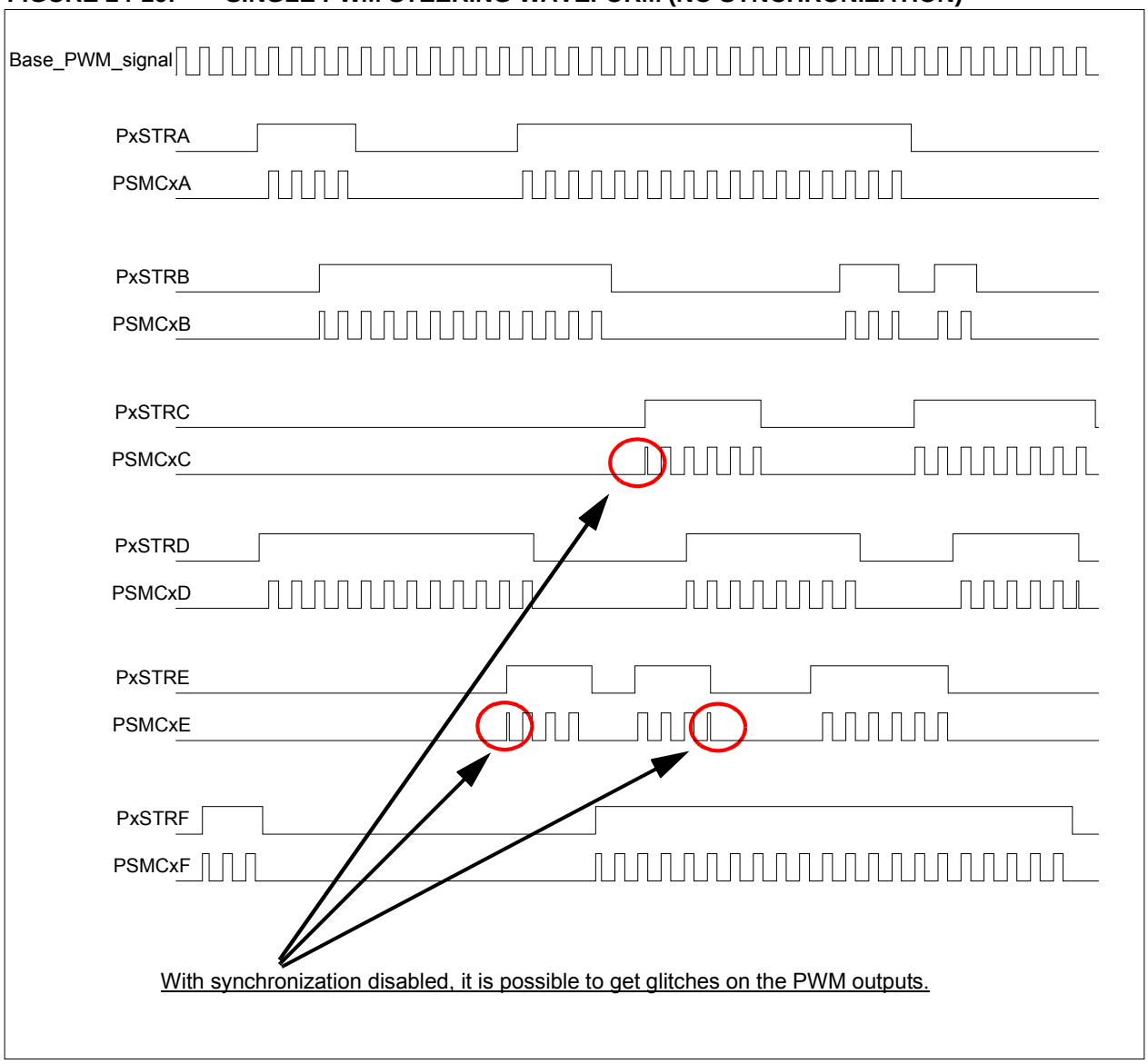

24.5.3 COMPLEMENTARY PWM STEERING

In Complementary PWM Steering mode, the primary PWM signal (non-complementary) and complementary signal can be steered according to their respective type.

Primary PWM signal can be steered to any of the following outputs:

- PSMCxA
- PSMCxC
- PSMCxE

The complementary PWM signal can be steered to any of the following outputs:

- PSMCxB
- PSMCxD
- PSMCxE

Examples of unsynchronized complementary steering are shown in Figure 24-17.

FIGURE 24-17: COMPLEMENTARY PWM STEERING WAVEFORM (NO SYNCHRONIZATION, ZERO DEAD-BAND TIME)

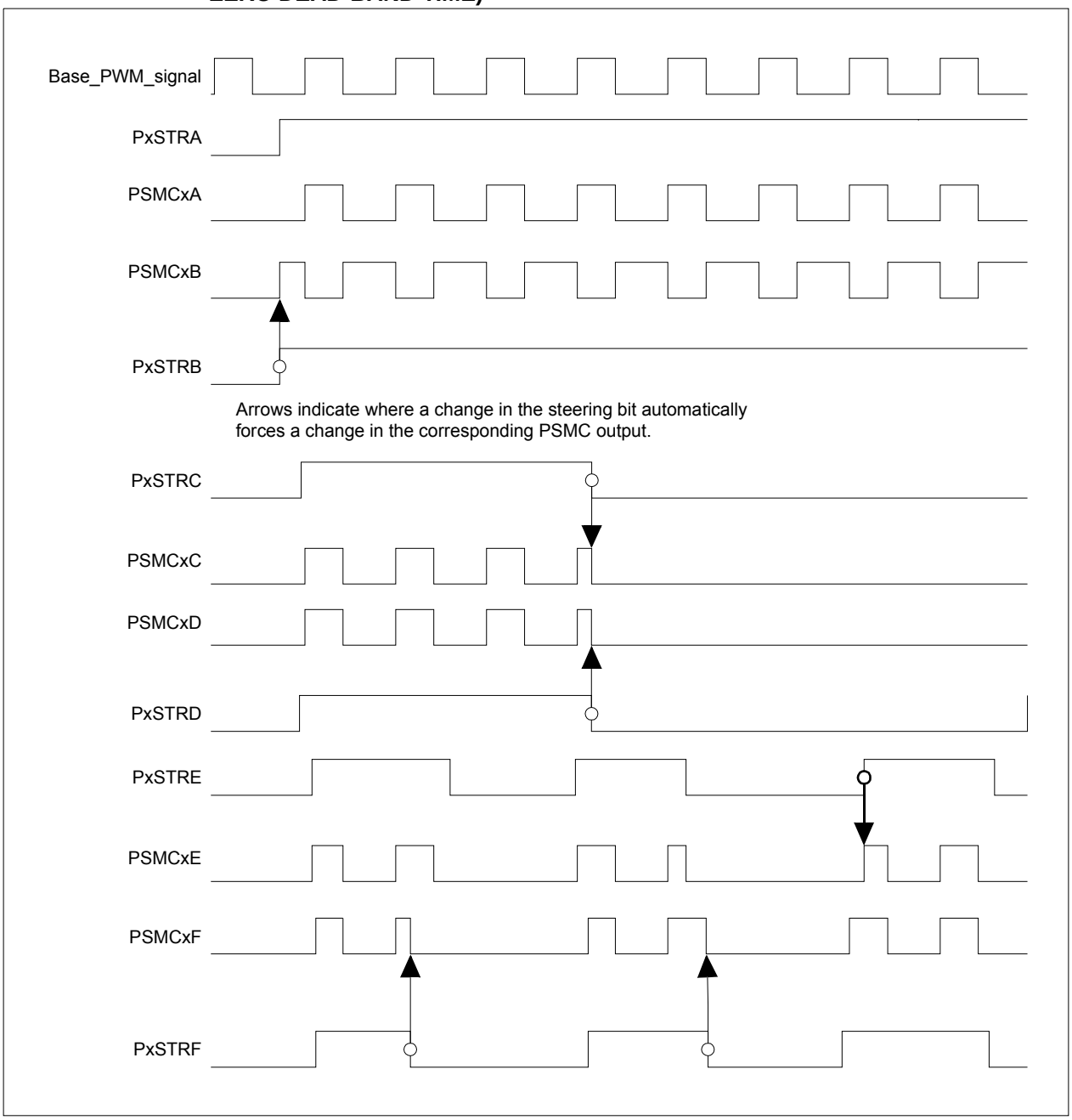

© 2012-2014 Microchip Technology Inc.

24.5.4 SYNCHRONIZED PWM STEERING

In Single, Complementary and 3-phase PWM modes, it is possible to synchronize changes to steering selections with the period event. This is so that PWM outputs do not change in the middle of a cycle and therefore, disrupt operation of the application.

Steering synchronization is enabled by setting the PxSSYNC bit of the PSMC Steering Control 1 (PSMCxSTR1) register (Register 24-32).

When synchronized steering is enabled while the PSMC module is enabled, steering changes do not take effect until the first period event after the PSMCxLD bit is set.

Examples of synchronized steering are shown in Figure 24-18.

24.5.5 INITIALIZING SYNCHRONIZED STEERING

If synchronized steering is to be used, special care should be taken to initialize the PSMC Steering Control 0 (PSMCxSTR0) register (Register 24-31) in a safe configuration before setting either the PSMCxEN or PSMCxLD bits. When either of those bits are set, the PSMCxSTR0 value at that time is loaded into the synchronized steering output buffer. The buffer load occurs even if the PxSSYNC bit is low. When the PxSSYNC bit is set, the outputs will immediately go to the drive states in the preloaded buffer.

FIGURE 24-18: PWM STEERING WITH SYNCHRONIZATION WAVEFORM

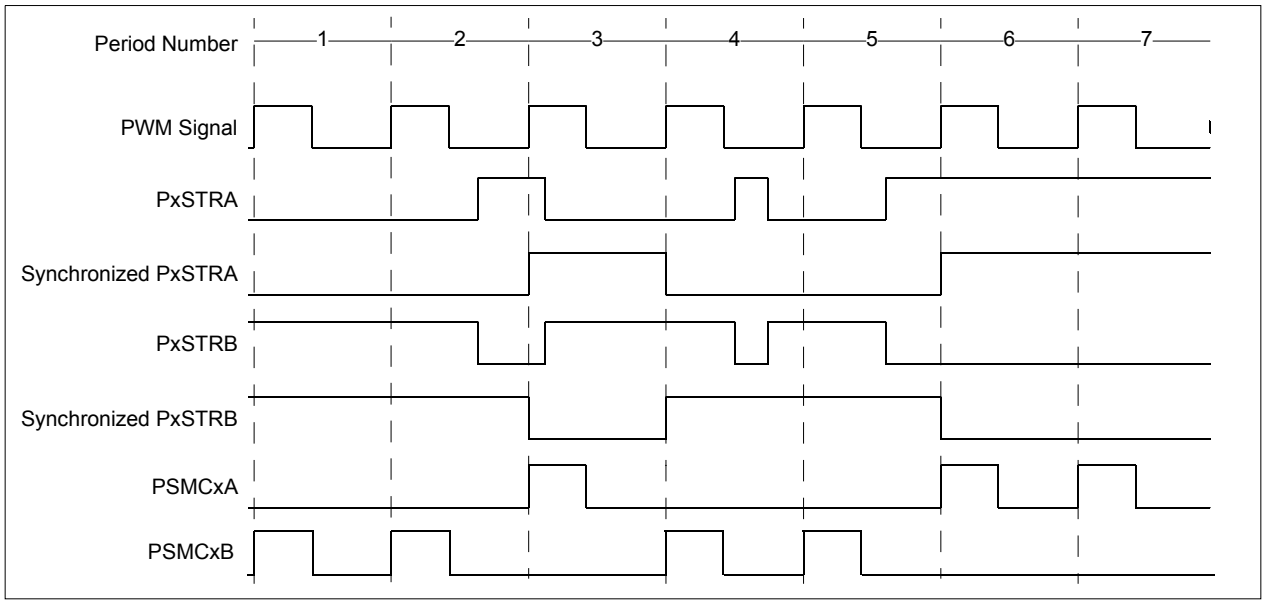

24.6 PSMC Modulation (Burst Mode)

PSMC modulation is a method to stop/start PWM operation of the PSMC without having to disable the module. It also allows other modules to control the operational period of the PSMC. This is also referred to as Burst mode.

This is a method to implement PWM dimming.

24.6.1 MODULATION ENABLE

The modulation function is enabled by setting the PxMDLEN bit of PSMC Modulation Control (PSMCxMDL) register (Register 24-2).

When modulation is enabled, the modulation source controls when the PWM signals are active and inactive.

When modulation is disabled, the PWM signals operate continuously, regardless of the selected modulation source.

24.6.2 MODULATION SOURCES

There are multiple sources that can be used for modulating the PSMC. However, unlike the PSMC input sources, only one modulation source can be selected at a time. Modulation sources include:

- PSMCxIN pin
- Any CCP output
- Any Comparator output
- PxMDLBIT of the PSMCxMDL register

24.6.2.1 PxMDLBIT Bit

The PxMDLBIT bit of the PSMC Modulation Control (PSMCxMDL) register (Register 24-2) allows for software modulation control without having to enable/disable other module functions.

24.6.3 MODULATION EFFECT ON PWM SIGNALS

When modulation starts, the PSMC begins operation on a new period, just as if it had rolled over from one period to another during continuous operation.

When modulation stops, its operation depends on the type of waveform being generated.

In operation modes other than Fixed Duty Cycle, the PSMC completes its current PWM period and then freezes the module. The PSMC output pins are forced into the default inactive state ready for use when modulation starts.

In Fixed Duty Cycle mode operation, the PSMC continues to operate until the period event changes the PWM to its inactive state, at which point the PSMC module is frozen. The PSMC output pins are forced into the default inactive state ready for use when modulation starts.

FIGURE 24-19: PSMC MODULATION WAVEFORM

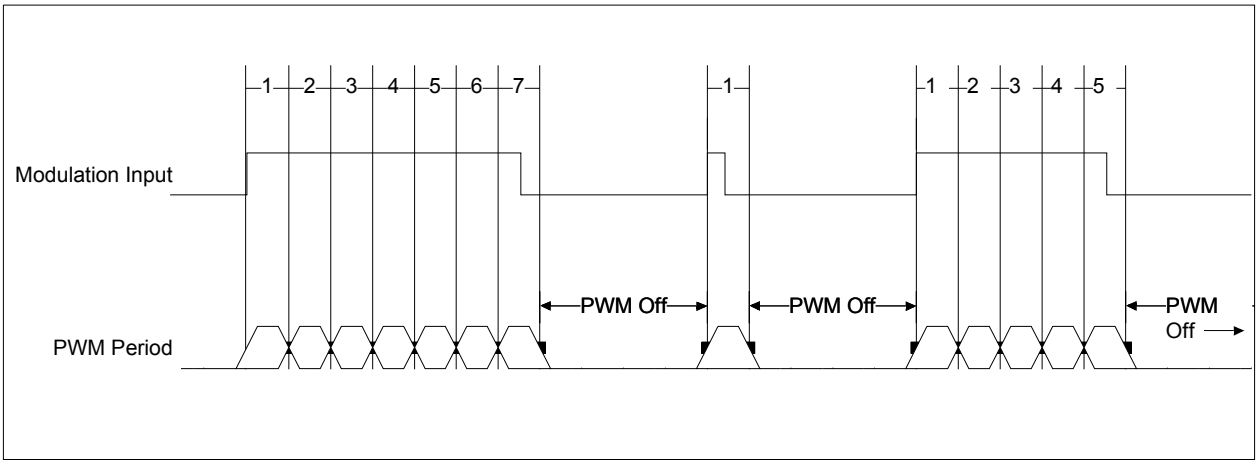

© 2012-2014 Microchip Technology Inc.

24.7 Auto-Shutdown

Auto-shutdown is a method to immediately override the PSMC output levels with specific overrides that allow for safe shutdown of the application.

Auto-shutdown includes a mechanism to allow the application to restart under different conditions.

Auto-shutdown is enabled with the PxASDEN bit of the PSMC Auto-shutdown Control (PSMCxASDC) register (Register 24-15). All auto-shutdown features are enabled when PxASDEN is set and disabled when cleared.

24.7.1 SHUTDOWN

There are two ways to generate a shutdown event:

- Manual
- External Input

24.7.1.1 Manual Override

The auto-shutdown control register can be used to manually override the pin functions. Setting the PxASE bit of the PSMC Auto-shutdown Control (PSMCxASDC) register (Register 24-15) generates a software shut-down event.

The auto-shutdown override will persist as long as PxASE remains set.

24.7.1.2 External Input Source

Any of the given sources that are available for event generation are also available for system shut-down. This is so that external circuitry can monitor and force a shutdown without any software overhead. Auto-shutdown sources are selected with the PSMC Auto-shutdown Source (PSMCxASDS) register (Register 24-17).

When any of the selected external auto-shutdown sources go high, the PxASE bit is set and an auto-shutdown interrupt is generated.

Note:	The external shutdown sources are level sensitive, not edge sensitive. The shutdown condition will persist as long as the circuit is driving the appropriate logic level.

24.7.2 PIN OVERRIDE LEVELS

The logic levels driven to the output pins during an auto-shutdown event are determined by the PSMC Auto-shutdown Output Level (PSMCxASDL) register (Register 24-16).

24.7.2.1 PIN Override Enable

Setting the PxASDOV bit of the PSMC Auto-shutdown Control (PSMCxASDC) register (Register 24-15) will also force the override levels onto the pins, exactly like what happens when the auto-shutdown is used. However, whereas setting PxASE causes an auto-shutdown interrupt, setting PxASDOV does not generate an interrupt.

24.7.3 RESTART FROM AUTO-SHUTDOWN

After an auto-shutdown event has occurred, there are two ways for the module to resume operation:

- Manual restart
- Automatic restart

The restart method is selected with the PxARSEN bit of the PSMC Auto-shutdown Control (PSMCxASDC) register (Register 24-15).

24.7.3.1 Manual Restart

When PxARSEN is cleared, and once the PxASDE bit is set, it will remain set until cleared by software.

The PSMC will restart on the period event after PxASDE bit is cleared in software.

24.7.3.2 Auto-Restart

When PxARSEN is set, the PxASDE bit will clear automatically when the source causing the Reset and no longer asserts the shut-down condition.

The PSMC will restart on the next period event after the auto-shutdown condition is removed.

Examples of manual and automatic restart are shown in Figure 24-20.

Note:	Whether manual or auto-restart is selected, the PxASDE bit cannot be cleared in software when the auto-shutdown condition is still present.

FIGURE 24-20: AUTO-SHUTDOWN AND RESTART WAVEFORM

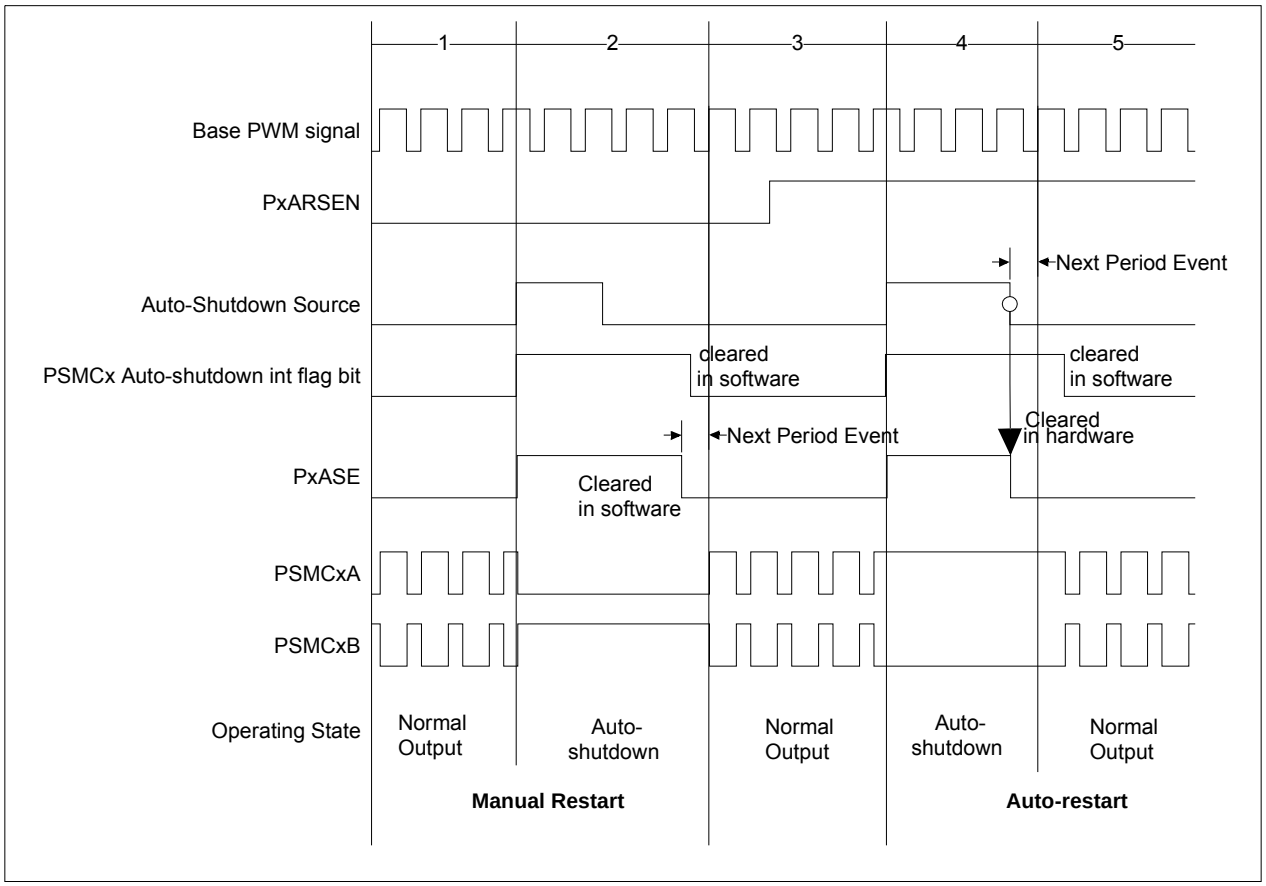

© 2012-2014 Microchip Technology Inc.

24.8 PSMC Synchronization

It is possible to synchronize the periods of two or more PSMC modules together, provided that all modules are on the same device.

Synchronization is achieved by sending a sync signal from the master PSMC module to the desired slave modules. This sync signal generates a period event in each slave module, thereby aligning all slaves with the master. This is useful when an application requires different PWM signal generation from each module but the waveforms must be consistent within a PWM period.

24.8.1 SYNCHRONIZATION SOURCES

The synchronization source can be any PSMC module on the same device. For example, in a device with two PSMC modules, the possible sources for each device is as shown below:

- Sources for PSMC1
  - PSMC2
- Sources for PSMC2
  - PSMC1

FIGURE 24-21: PSMC SYNCHRONIZATION - SYNC OUTPUT TO PIN

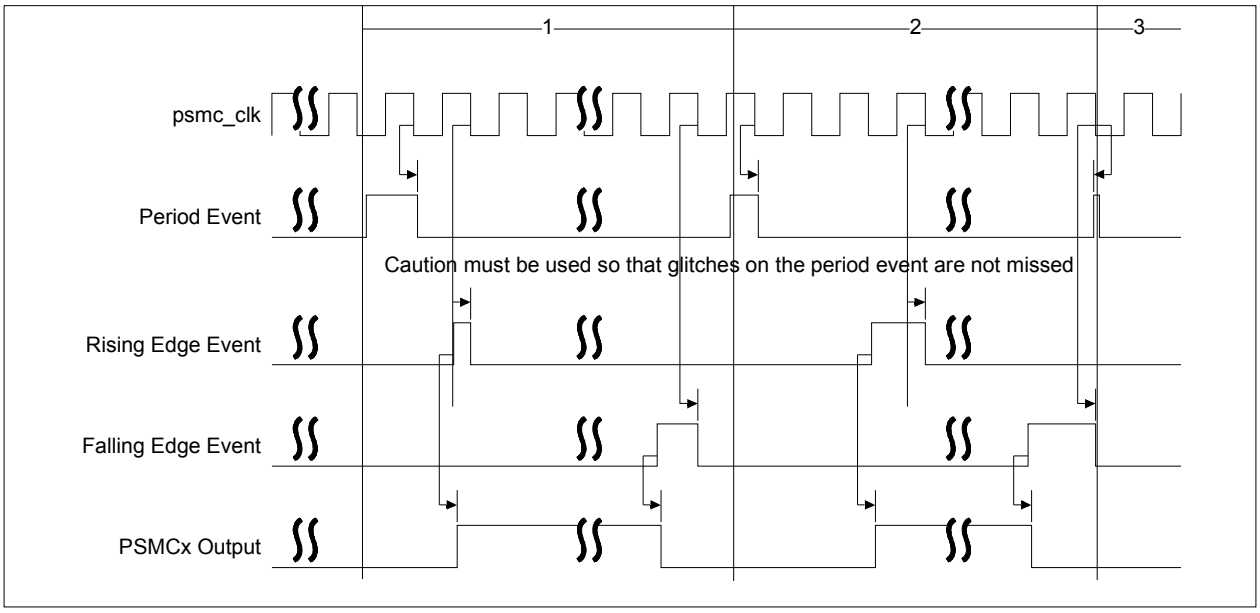

24.8.1.1 PSMC Internal Connections

The sync signal from the master PSMC module is essentially that modules period event trigger. The slave PSMC modules reset their PSMCxTMR with the sync signal instead of their own period event.

Enabling a module as a slave recipient is done with the PxSYNC bits of the PSMC Synchronization Control (PSMCxSYNC) registers; registers 24-3 and 24-4.

24.8.1.2 Phase Offset Synchronization

The synchronization output signal from the PSMC module is selectable. The sync_out source may be either:

- Period Event
- Rising Event

Source selection is made with the PxPOFST bit of the PSMCxSYNC registers, registers 24-3, 24-4 and 24-6.

When the PxPOFST bit is set, the sync_out signal comes from the rising event and the period event replaces the rising event as the start of the active drive period. When PxPOFST is set, duty cycles of up to 100% are achievable in both the slave and master.

When PXPOFST is clear, the sync_out signal comes from the period event. When PxPOFST is clear, rising events that start after the period event remove the equivalent start delay percentage from the maximum 100% duty cycle.

24.8.1.3 Synchronization Skid

When the sync_out source is the Period Event, the slave synchronous rising and falling events will lag by one psmc_clk period. When the sync_out source is the Rising Event, the synchronous events will lag by two clock periods. To compensate for this, the values in PHH:PHL and DCH:DCL registers can be reduced by the number of lag cycles.

24.9 Fractional Frequency Adjust (FFA)

FFA is a method by which PWM resolution can be improved on 50% fixed duty cycle signals. Higher resolution is achieved by altering the PWM period by a single count for calculated intervals. This increased resolution is based upon the PWM frequency averaged over a large number of PWM periods. For example, if the period event time is increased by one psmc_clk period (TPSMC_CLK) every N events, then the effective resolution of the average event period is TPSMC_CLK/N.

When active, after every period event the FFA hardware adds the PSMCxFFA value with the previously accumulated result. Each time the addition causes an overflow, the period event time is increased by one. Refer to Figure 24-22.

FIGURE 24-22: FFA BLOCK DIAGRAM.

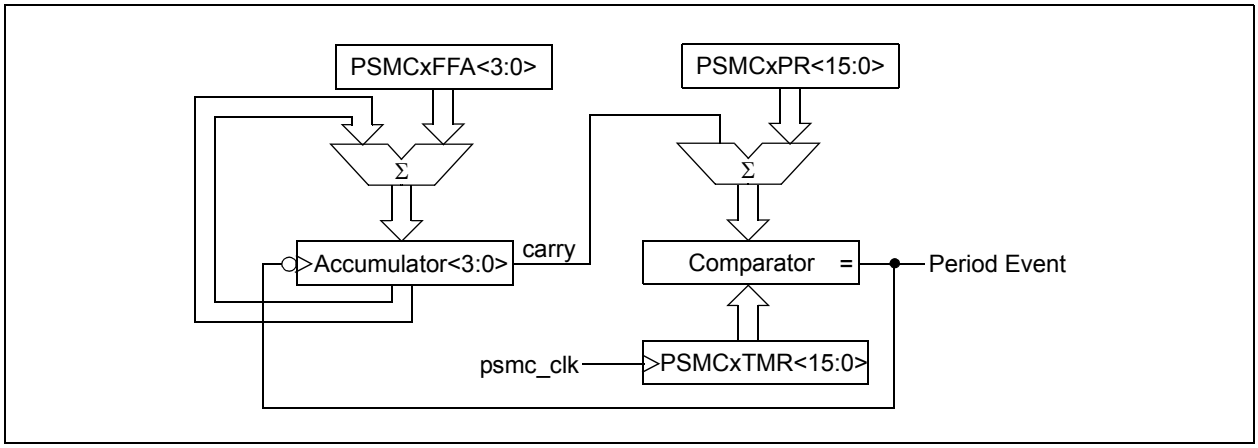

The FFA function is only available when using one of the two Fixed Duty Cycle modes of operation. In fixed duty cycle operation each PWM period is comprised of two period events. That is why the PWM periods in Table 24-3 example calculations are multiplied by two as opposed to the normal period calculations for normal mode operation.

The extra resolution gained by the FFA is based upon the number of bits in the FFA register and the psmc_-clk frequency. The parameters of interest are:

- TPWM – this is the lower bound of the PWM period that will be adjusted
- TPWM+1 – this is the upper bound of the PWM period that will be adjusted. This is used to help determine the step size for each increment of the FFA register
- TRESOLUTION – each increment of the FFA register will add this amount of period to average PWM frequency

TABLE 24-3: FRACTIONAL FREQUENCY ADJUST CALCULATIONS

Parameter	Value
FPSMC_CLK	64 MHz
TPSMC_CLK	15.625 ns
PSMCxPR<15:0>	00FFh = 255
TPWM	= (PSMCxPR<15:0>+1)*2*TPSMC_CLK = 256*2*15.625ns = 8 us
FPWM	125 kHz
TPWM+1	= (PSMCxPR<15:0>+2)*2*TPSMC_CLK = 257*2*15.625ns = 8.03125 us
FPWM+1	= 124.513 kHz
TRESOLUTION	= (TPWM+1-TPWM)/$2^{FFA\text{-}Bits}$ = (8.03125us - 8.0 us)/16 = 0.03125us/16 ~ 1.95 ns
FRESOLUTION	(FPWM+1-FPWM)/$2^{FFA\text{-}Bits}$ ~ -30.4 Hz

© 2012-2014 Microchip Technology Inc.

TABLE 24-4: SAMPLE FFA OUTPUT PERIODS/FREQUENCIES

FFA number	Output Frequency (kHz)	Step Size (Hz)
0	125.000	0
1	124.970	-30.4
2	124.939	-60.8
3	124.909	-91.2
4	124.878	-121.6
5	124.848	-152.0
6	124.818	-182.4
7	124.787	-212.8
8	124.757	-243.2
9	124.726	-273.6
10	124.696	-304.0
11	124.666	-334.4
12	124.635	-364.8
13	124.605	-395.2
14	124.574	-425.6
15	124.544	-456.0

24.10 Register Updates

There are 10 double-buffered registers that can be updated “on the fly”. However, due to the asynchronous nature of the potential updates, a special hardware system is used for the updates.

There are two operating cases for the PSMC:

- module is enabled
- module is disabled

24.10.1 DOUBLE BUFFERED REGISTERS

The double-buffered registers that are affected by the special hardware update system are:

- PSMCxPRL
- PSMCxPRH
- PSMCxDCL
- PSMCxDCH
- PSMCxPHL
- PSMCxPHH
- PSMCxDBR
- PSMCxDBF
- PSMCxBLKR
- PSMCxBLKF
- PSMCxSTR0 (when the PxSSYNC bit is set)

24.10.2 MODULE DISABLED UPDATES

When the PSMC module is disabled (PSMCxEN = `0`), any write to one of the buffered registers will also write directly to the buffer. This means that all buffers are loaded and ready for use when the module is enabled.

24.10.3 MODULE ENABLED UPDATES

When the PSMC module is enabled (PSMCxEN = `1`), the PSMCxLD bit of the PSMC Control (PSMCxCON) register (Register 24-1) must be used.

When the PSMCxLD bit is set, the transfer from the register to the buffer occurs on the next period event. The PSMCxLD bit is automatically cleared by hardware after the transfer to the buffers is complete.

The reason that the PSMCxLD bit is required is that depending on the customer application and operation conditions, all 10 registers may not be updated in one PSMC period. If the buffers are loaded at different times (i.e., DCL gets updated, but DCH does not OR DCL and DCL are updated by PRH and PRL are not), then unintended operation may occur.

The sequence for loading the buffer registers when the PSMC module is enabled is as follows:

1. Software updates all registers.
2. Software sets the PSMCxLD bit.
3. Hardware updates all buffers on the next period event.
4. Hardware clears PSMCxLD bit.

24.11 Operation During Sleep

The PSMC continues to operate in Sleep with the following clock sources:

- Internal 64 MHz
- External clock

© 2012-2014 Microchip Technology Inc.

24.12 Register Definitions: PSMC Control

REGISTER 24-1: PSMCxCON: PSMC CONTROL REGISTER

R/W-0/0	R/W/HC-0/0	R/W-0/0	R/W-0/0	R/W-0/0	R/W-0/0	R/W-0/0	R/W-0/0
PSMCxEN	PSMCxLD	PxDBFE	PxDBRE	PxMODE<3:0>			
bit 7							bit 0

Legend:		
R = Readable bit	W = Writable bit	U = Unimplemented bit, read as ‘0’
u = Bit is unchanged	x = Bit is unknown	-n/n = Value at POR and BOR/Value at all other Resets
‘1’ = Bit is set	‘0’ = Bit is cleared	

bit 7 **PSMCxEN:** PSMC Module Enable bit
- 1 = PSMCx module is enabled
- 0 = PSMCx module is disabled

bit 6 **PSMCxLD:** PSMC Load Buffer Enable bit
- 1 = PSMCx registers are ready to be updated with the appropriate register contents
- 0 = PSMCx buffer update complete

bit 5 **PxDBFE:** PSMC Falling Edge Dead-Band Enable bit
- 1 = PSMCx falling edge dead band enabled
- 0 = PSMCx falling edge dead band disabled

bit 4 **PxDBRE:** PSMC Rising Edge Dead-Band Enable bit
- 1 = PSMCx rising edge dead band enabled
- 0 = PSMCx rising edge dead band disabled

bit 3-0 **PxMODE<3:0>** PSMC Operating Mode bits
- 1111 = Reserved
- 1110 = Reserved
- 1101 = Reserved
- 1100 = 3-phase steering PWM
- 1011 = Fixed duty cycle, variable frequency, complementary PWM
- 1010 = Fixed duty cycle, variable frequency, single PWM
- 1001 = ECCP compatible Full-Bridge forward output
- 1000 = ECCP compatible Full-Bridge reverse output
- 0111 = Pulse-skipping with complementary output
- 0110 = Pulse-skipping PWM output
- 0101 = Push-pull with four full-bridge outputs and complementary outputs
- 0100 = Push-pull with four full-bridge outputs
- 0011 = Push-pull with complementary outputs
- 0010 = Push-pull output
- 0001 = Single PWM with complementary output (with PWM steering capability)
- 0000 = Single PWM waveform generation (with PWM steering capability)

REGISTER 24-2: PSMCxMDL: PSMC MODULATION CONTROL REGISTER

R/W-0/0	R/W-0/0	R/W-0/0	U-0	R/W-0/0	R/W-0/0	R/W-0/0	R/W-0/0
PxMDLEN	PxMDLPOL	PxMDLBIT	—	PxMSRC<3:0>			
bit 7							bit 0

Legend:		
R = Readable bit	W = Writable bit	U = Unimplemented bit, read as ‘0’
u = Bit is unchanged	x = Bit is unknown	-n/n = Value at POR and BOR/Value at all other Resets
‘1’ = Bit is set	‘0’ = Bit is cleared	

bit 7 **PxMDLEN:** PSMC Periodic Modulation Mode Enable bit
1 = PSMCx is active when input signal selected by PxMSRC<3:0> is in its active state (see PxMPOL)
0 = PSMCx module is always active

bit 6 **PxMDLPOL:** PSMC Periodic Modulation Polarity bit
1 = PSMCx is active when the PSMCx Modulation source output equals logic ‘0’ (active-low)
0 = PSMCx is active when the PSMCx Modulation source output equals logic ‘1’ (active-high)

bit 5 **PxMDLBIT:** PSMC Periodic Modulation Software Control bit
PxMDLEN = 1 AND PxMSRC<3:0> = 0000
1 = PSMCx is active when the PxMDLPOL equals logic ‘0’
0 = PSMCx is active when the PxMDLPOL equals logic ‘1’
PxMDLEN = 0 OR (PxMDLEN = 1 and PxMSRC<3:0> <> ‘0000’)
Does not affect module operation

bit 4 **Unimplemented:** Read as ‘0’

bit 3-0 **PxMSRC<3:0>** PSMC Periodic Modulation Source Selection bits
1111 = Reserved
1110 = Reserved
1101 = Reserved
1100 = Reserved
1011 = Reserved
1010 = Reserved
1001 = Reserved
1000 = PSMCx Modulation Source is PSMCxIN pin
0111 = Reserved
0110 = PSMCx Modulation Source is CCP2
0101 = PSMCx Modulation Source is CCP1
0100 = Reserved
0011 = PSMCx Modulation Source is sync_C3OUT
0010 = PSMCx Modulation Source is sync_C2OUT
0001 = PSMCx Modulation Source is sync_C1OUT
0000 = PSMCx Modulation Source is PxMDLBIT register bit

© 2012-2014 Microchip Technology Inc.

REGISTER 24-3: PSMC1SYNC: PSMC1 SYNCHRONIZATION CONTROL REGISTER

R/W-0/0	R/W-0/0	R/W-0/0	U-0	U-0	U-0	R/W-0/0	R/W-0/0
P1POFST	P1PRPOL	P1DCPOL	—	—	—	P1SYNC<1:0>	
bit 7							bit 0

Legend:		
R = Readable bit	W = Writable bit	U = Unimplemented bit, read as ‘0’
u = Bit is unchanged	x = Bit is unknown	-n/n = Value at POR and BOR/Value at all other Resets
‘1’ = Bit is set	‘0’ = Bit is cleared	

bit 7 **P1POFST:** PSMC1 Phase Offset Control bit
`1` = sync_out source is phase event and latch set source is synchronous period event
`0` = sync_out source is period event and latch set source is phase event

bit 6 **P1PRPOL:** PSMC1 Period Polarity Event Control bit
`1` = Selected asynchronous period event inputs are inverted
`0` = Selected asynchronous period event inputs are not inverted

bit 5 **P1DCPOL:** PSMC1 Duty-cycle Event Polarity Control bit
`1` = Selected asynchronous duty-cycle event inputs are inverted
`0` = Selected asynchronous duty-cycle event inputs are not inverted

bit 4-2 **Unimplemented:** Read as ‘`0`’

bit 1-0 **P1SYNC<1:0>:** PSMC1 Period Synchronization Mode bits
`11` = PSMC1 is synchronized with the PSMC3 module (sync_in comes from PSMC3 sync_out)
`10` = PSMC1 is synchronized with the PSMC2 module (sync_in comes from PSMC2 sync_out)
`01` = Reserved - Do not use
`00` = PSMC1 is synchronized with period event

REGISTER 24-4: PSMC2SYNC: PSMC2 SYNCHRONIZATION CONTROL REGISTER

R/W-0/0	R/W-0/0	R/W-0/0	U-0	U-0	U-0	R/W-0/0	R/W-0/0
P2POFST	P2PRPOL	P2DCPOL	—	—	—	P2SYNC<1:0>	
bit 7							bit 0

Legend:		
R = Readable bit	W = Writable bit	U = Unimplemented bit, read as ‘0’
u = Bit is unchanged	x = Bit is unknown	-n/n = Value at POR and BOR/Value at all other Resets
‘1’ = Bit is set	‘0’ = Bit is cleared	

bit 7 **P2POFST:** PSMC2 Phase Offset Control bit
`1` = sync_out source is phase event and latch set source is synchronous period event
`0` = sync_out source is period event and latch set source is phase event

bit 6 **P2PRPOL:** PSMC2 Period Polarity Event Control bit
`1` = Selected asynchronous period event inputs are inverted
`0` = Selected asynchronous period event inputs are not inverted

bit 5 **P2DCPOL:** PSMC2 Duty-cycle Event Polarity Control bit
`1` = Selected asynchronous duty-cycle event inputs are inverted
`0` = Selected asynchronous duty-cycle event inputs are not inverted

bit 4-2 **Unimplemented:** Read as ‘`0`’

bit 1-0 **P2SYNC<1:0>:** PSMC2 Period Synchronization Mode bits
`11` = PSMC2 is synchronized with the PSMC3 module (sync_in comes from PSMC3 sync_out)
`10` = Reserved – Do not use
`01` = PSMC2 is synchronized with the PSMC1 module (sync_in comes from PSMC1 sync_out)
`00` = PSMC2 is synchronized with period event

REGISTER 24-5: PSMC3SYNC: PSMC3 SYNCHRONIZATION CONTROL REGISTER

R/W-0/0	R/W-0/0	R/W-0/0	U-0	U-0	U-0	R/W-0/0	R/W-0/0
P3POFST	P3PRPOL	P3DCPOL	—	—	—	P3SYNC<1:0>	
bit 7							bit 0

Legend:		
R = Readable bit	W = Writable bit	U = Unimplemented bit, read as ‘0’
u = Bit is unchanged	x = Bit is unknown	-n/n = Value at POR and BOR/Value at all other Resets
‘1’ = Bit is set	‘0’ = Bit is cleared	

bit 7 **P3POFST:** PSMC3 Phase Offset Control bit
- 1 = sync_out source is phase event and latch set source is synchronous period event
- 0 = sync_out source is period event and latch set source is phase event

bit 6 **P3PRPOL:** PSMC3 Period Polarity Event Control bit
- 1 = Selected asynchronous period event inputs are inverted
- 0 = Selected asynchronous period event inputs are not inverted

bit 5 **P3DCPOL:** PSMC3 Duty-cycle Event Polarity Control bit
- 1 = Selected asynchronous duty-cycle event inputs are inverted
- 0 = Selected asynchronous duty-cycle event inputs are not inverted

bit 4-2 **Unimplemented:** Read as ‘0’

bit 1-0 **P3SYNC<1:0>:** PSMC3 Period Synchronization Mode bits
- 11 = Reserved – Do not use
- 10 = PSMC3 is synchronized with the PSMC2 module (sync_in comes from PSMC2 sync_out)
- 01 = PSMC3 is synchronized with the PSMC1 module (sync_in comes from PSMC1 sync_out)
- 00 = PSMC3 is synchronized with period event

© 2012-2014 Microchip Technology Inc.

REGISTER 24-6: PSMCxCLK: PSMC CLOCK CONTROL REGISTER

U-0	U-0	R/W-0/0	R/W-0/0	U-0	U-0	R/W-0/0	R/W-0/0
—	—	PxCPRE<1:0>		—	—	PxCSRC<1:0>	
bit 7							bit 0

Legend:		
R = Readable bit	W = Writable bit	U = Unimplemented bit, read as ‘0’
u = Bit is unchanged	x = Bit is unknown	-n/n = Value at POR and BOR/Value at all other Resets
‘1’ = Bit is set	‘0’ = Bit is cleared	

bit 7-6 **Unimplemented:** Read as ‘0’

bit 5-4 **PxCPRE<1:0>:** PSMCx Clock Prescaler Selection bits
- 11 = PSMCx Clock frequency/8
- 10 = PSMCx Clock frequency/4
- 01 = PSMCx Clock frequency/2
- 00 = PSMCx Clock frequency/1

bit 3-2 **Unimplemented:** Read as ‘0’

bit 1-0 **PxCSRC<1:0>:** PSMCx Clock Source Selection bits
- 11 = Reserved
- 10 = PSMCxCLK pin
- 01 = 64 MHz clock in from PLL
- 00 = FOSC system clock

REGISTER 24-7: PSMCxOEN: PSMC OUTPUT ENABLE CONTROL REGISTER

U-0	U-0	R/W-0/0	R/W-0/0	R/W-0/0	R/W-0/0	R/W-0/0	R/W-0/0
—	—	PxOEF(1)	PxOEE(1)	PxOED(1)	PxOEC(1)	PxOEB	PxOEA
bit 7							bit 0

Legend:		
R = Readable bit	W = Writable bit	U = Unimplemented bit, read as ‘0’
u = Bit is unchanged	x = Bit is unknown	-n/n = Value at POR and BOR/Value at all other Resets
‘1’ = Bit is set	‘0’ = Bit is cleared	

bit 7-6 **Unimplemented:** Read as ‘0’

bit 5-0 **PxOEy:** PSMCx Output y Enable bit(1)
- 1 = PWM output is active on PSMCx output y pin
- 0 = PWM output is not active, normal port functions in control of pin

Note 1: These bits are not implemented on PSMC2.

REGISTER 24-8: PSMCxPOL: PSMC POLARITY CONTROL REGISTER

U-0	R/W-0/0	R/W-0/0	R/W-0/0	R/W-0/0	R/W-0/0	R/W-0/0	R/W-0/0
—	PxPOLIN	PxPOLF(1)	PxPOLE(1)	PxPOLD(1)	PxPOLC(1)	PxPOLB	PxPOLA
bit 7							bit 0

Legend:		
R = Readable bit	W = Writable bit	U = Unimplemented bit, read as ‘0’
u = Bit is unchanged	x = Bit is unknown	-n/n = Value at POR and BOR/Value at all other Resets
‘1’ = Bit is set	‘0’ = Bit is cleared	

bit 7 **Unimplemented:** Read as ‘0’

bit 6 **PxPOLIN:** PSMCxIN Polarity bit
1 = PSMCxIN input is active-low
0 = PSMCxIN input is active-high

bit 5-0 **PxPOLy:** PSMCx Output y Polarity bit(1)
1 = PWM PSMCx output y is active-low
0 = PWM PSMCx output y is active-high

Note 1: These bits are not implemented on PSMC2.

REGISTER 24-9: PSMCxBLNK: PSMC BLANKING CONTROL REGISTER

U-0	U-0	R/W-0/0	R/W-0/0	U-0	U-0	R/W-0/0	R/W-0/0
—	—	PxFEBM1	PxFEBM0	—	—	PxREBM1	PxREBM0
bit 7							bit 0

Legend:		
R = Readable bit	W = Writable bit	U = Unimplemented bit, read as ‘0’
u = Bit is unchanged	x = Bit is unknown	-n/n = Value at POR and BOR/Value at all other Resets
‘1’ = Bit is set	‘0’ = Bit is cleared	

bit 7-6 **Unimplemented:** Read as ‘0’

bit 5-4 **PxFEBM<1:0>** PSMC Falling Edge Blanking Mode bits
11 = Reserved – do not use
10 = Reserved – do not use
01 = Immediate blanking
00 = No blanking

bit 3-2 **Unimplemented:** Read as ‘0’

bit 1-0 **PxREBM<1:0>** PSMC Rising Edge Blanking Mode bits
11 = Reserved – do not use
10 = Reserved – do not use
01 = Immediate blanking
00 = No blanking

© 2012-2014 Microchip Technology Inc.

REGISTER 24-10: PSMCxREBS: PSMC RISING EDGE BLANKED SOURCE REGISTER

R/W-0/0	U-0	U-0	R/W-0/0	R/W-0/0	R/W-0/0	R/W-0/0	U-0
PxREBSIN	—	—	PxREBSC4	PxREBSC3	PxREBSC2	PxREBSC1	—
bit 7							bit 0

Legend:		
R = Readable bit	W = Writable bit	U = Unimplemented bit, read as ‘0’
u = Bit is unchanged	x = Bit is unknown	-n/n = Value at POR and BOR/Value at all other Resets
‘1’ = Bit is set	‘0’ = Bit is cleared	

bit 7 **PxREBSIN:** PSMCx Rising Edge Event Blanked from PSMCxIN pin
1 = PSMCxIN pin cannot cause a rising or falling event for the duration indicated by the PSMCxBLNK register
0 = PSMCxIN pin is not blanked

bit 6-5 **Unimplemented:** Read as ‘0’

bit 4 **PxREBSC4:** PSMCx Rising Edge Event Blanked from sync_C4OUT
1 = sync_C4OUT cannot cause a rising or falling event for the duration indicated by the PSMCxBLNK register
0 = sync_C4OUT is not blanked

bit 3 **PxREBSC3:** PSMCx Rising Edge Event Blanked from sync_C3OUT
1 = sync_C3OUT cannot cause a rising or falling event for the duration indicated by the PSMCxBLNK register
0 = sync_C3OUT is not blanked

bit 2 **PxREBSC2:** PSMCx Rising Edge Event Blanked from sync_C2OUT
1 = sync_C2OUT cannot cause a rising or falling event for the duration indicated by the PSMCxBLNK register
0 = sync_C2OUT is not blanked

bit 1 **PxREBSC1:** PSMCx Rising Edge Event Blanked from sync_C1OUT
1 = sync_C1OUT cannot cause a rising or falling event for the duration indicated by the PSMCxBLNK register
0 = sync_C1OUT is not blanked

bit 0 **Unimplemented:** Read as ‘0’

REGISTER 24-11: PSMCxFEBS: PSMC FALLING EDGE BLANKED SOURCE REGISTER

R/W-0/0	U-0	U-0	R/W-0/0	R/W-0/0	R/W-0/0	R/W-0/0	U-0
PxFEBSIN	—	—	PxFEBSC4	PxFEBSC3	PxFEBSC2	PxFEBSC1	—
bit 7							bit 0

Legend:		
R = Readable bit	W = Writable bit	U = Unimplemented bit, read as ‘0’
u = Bit is unchanged	x = Bit is unknown	-n/n = Value at POR and BOR/Value at all other Resets
‘1’ = Bit is set	‘0’ = Bit is cleared	

bit 7 **PxFEBSIN:** PSMCx Falling Edge Event Blanked from PSMCxIN pin
1 = PSMCxIN pin cannot cause a rising or falling event for the duration indicated by the PSMCxBLNK register
0 = PSMCxIN pin is not blanked

bit 6-5 **Unimplemented:** Read as ‘0’

bit 4 **PxFEBSC4:** PSMCx Falling Edge Event Blanked from sync_C4OUT
1 = sync_C4OUT cannot cause a rising or falling event for the duration indicated by the PSMCxBLNK register
0 = sync_C4OUT is not blanked

bit 3 **PxFEBSC3:** PSMCx Falling Edge Event Blanked from sync_C3OUT
1 = sync_C3OUT cannot cause a rising or falling event for the duration indicated by the PSMCxBLNK register
0 = sync_C3OUT is not blanked

bit 2 **PxFEBSC2:** PSMCx Falling Edge Event Blanked from sync_C2OUT
1 = sync_C2OUT cannot cause a rising or falling event for the duration indicated by the PSMCxBLNK register
0 = sync_C2OUT is not blanked

bit 1 **PxFEBSC1:** PSMCx Falling Edge Event Blanked from sync_C1OUT
1 = sync_C1OUT cannot cause a rising or falling event for the duration indicated by the PSMCxBLNK register
0 = sync_C1OUT is not blanked

bit 0 **Unimplemented:** Read as ‘0’

REGISTER 24-12: PSMCxPHS: PSMC PHASE SOURCE REGISTER(1)

R/W-0/0	U-0	U-0	R/W-0/0	R/W-0/0	R/W-0/0	R/W-0/0	R/W-0/0
PxPHSIN	—	—	PxPHSC4	PxPHSC3	PxPHSC2	PxPHSC1	PxPHST
bit 7							bit 0

Legend:		
R = Readable bit	W = Writable bit	U = Unimplemented bit, read as ‘0’
u = Bit is unchanged	x = Bit is unknown	-n/n = Value at POR and BOR/Value at all other Resets
‘1’ = Bit is set	‘0’ = Bit is cleared	

bit 7 **PxPHSIN:** PSMCx Rising Edge Event occurs on PSMCxIN pin
1 = Rising edge event will occur when PSMCxIN pin goes true
0 = PSMCxIN pin will not cause rising edge event

bit 6-5 **Unimplemented:** Read as ‘0’

bit 4 **PxPHSC4:** PSMCx Rising Edge Event occurs on sync_C4OUT output
1 = Rising edge event will occur when sync_C4OUT output goes true
0 = sync_C4OUT will not cause rising edge event

bit 3 **PxPHSC3:** PSMCx Rising Edge Event occurs on sync_C3OUT output
1 = Rising edge event will occur when sync_C3OUT output goes true
0 = sync_C3OUT will not cause rising edge event

bit 2 **PxPHSC2:** PSMCx Rising Edge Event occurs on sync_C2OUT output
1 = Rising edge event will occur when sync_C2OUT output goes true
0 = sync_C2OUT will not cause rising edge event

bit 1 **PxPHSC1:** PSMCx Rising Edge Event occurs on sync_C1OUT output
1 = Rising edge event will occur when sync_C1OUT output goes true
0 = sync_C1OUT will not cause rising edge event

bit 0 **PxPHST:** PSMCx Rising Edge Event occurs on Time Base match
1 = Rising edge event will occur when PSMCxTMR = PSMCxPH
0 = Time base will not cause rising edge event

Note 1: Sources are not mutually exclusive: more than one source can cause a rising edge event.

© 2012-2014 Microchip Technology Inc.

REGISTER 24-13: PSMCxDCS: PSMC DUTY CYCLE SOURCE REGISTER(1)

R/W-0/0	U-0	U-0	R/W-0/0	R/W-0/0	R/W-0/0	R/W-0/0	R/W-0/0
PxDCSIN	—	—	PxDCSC4	PxDCSC3	PxDCSC2	PxDCSC1	PxDCST
bit 7							bit 0

Legend:		
R = Readable bit	W = Writable bit	U = Unimplemented bit, read as ‘0’
u = Bit is unchanged	x = Bit is unknown	-n/n = Value at POR and BOR/Value at all other Resets
‘1’ = Bit is set	‘0’ = Bit is cleared	

bit 7 **PxDCSIN:** PSMCx Falling Edge Event occurs on PSMCxIN pin
1 = Falling edge event will occur when PSMCxIN pin goes true
0 = PSMCxIN pin will not cause falling edge event

bit 6-5 **Unimplemented:** Read as ‘0’

bit 4 **PxDCSC4:** PSMCx Falling Edge Event occurs on sync_C4OUT output
1 = Falling edge event will occur when sync_C4OUT output goes true
0 = sync_C4OUT will not cause falling edge event

bit 3 **PxDCSC3:** PSMCx Falling Edge Event occurs on sync_C3OUT output
1 = Falling edge event will occur when sync_C3OUT output goes true
0 = sync_C3OUT will not cause falling edge event

bit 2 **PxDCSC2:** PSMCx Falling Edge Event occurs on sync_C2OUT output
1 = Falling edge event will occur when sync_C2OUT output goes true
0 = sync_C2OUT will not cause falling edge event

bit 1 **PxDCSC1:** PSMCx Falling Edge Event occurs on sync_C1OUT output
1 = Falling edge event will occur when sync_C1OUT output goes true
0 = sync_C1OUT will not cause falling edge event

bit 0 **PxDCST:** PSMCx Falling Edge Event occurs on Time Base match
1 = Falling edge event will occur when PSMCxTMR = PSMCxDC
0 = Time base will not cause falling edge event

Note 1: Sources are not mutually exclusive: more than one source can cause a falling edge event.

REGISTER 24-14: PSMCxPRS: PSMC PERIOD SOURCE REGISTER(1)

R/W-0/0	U-0	U-0	R/W-0/0	R/W-0/0	R/W-0/0	R/W-0/0	R/W-0/0
PxPRSIN	—	—	PxPRSC4	PxPRSC3	PxPRSC2	PxPRSC1	PxPRST
bit 7							bit 0

Legend:		
R = Readable bit	W = Writable bit	U = Unimplemented bit, read as ‘0’
u = Bit is unchanged	x = Bit is unknown	-n/n = Value at POR and BOR/Value at all other Resets
‘1’ = Bit is set	‘0’ = Bit is cleared	

bit 7 **PxPRSIN:** PSMCx Period Event occurs on PSMCxIN pin
- 1 = Period event will occur and PSMCxTMR will reset when PSMCxIN pin goes true
- 0 = PSMCxIN pin will not cause period event

bit 6-5 **Unimplemented:** Read as ‘0’

bit 4 **PxPRSC4:** PSMCx Period Event occurs on sync_C4OUT output
- 1 = Period event will occur and PSMCxTMR will reset when sync_C4OUT output goes true
- 0 = sync_C4OUT will not cause period event

bit 3 **PxPRSC3:** PSMCx Period Event occurs on sync_C3OUT output
- 1 = Period event will occur and PSMCxTMR will reset when sync_C3OUT output goes true
- 0 = sync_C3OUT will not cause period event

bit 2 **PxPRSC2:** PSMCx Period Event occurs on sync_C2OUT output
- 1 = Period event will occur and PSMCxTMR will reset when sync_C2OUT output goes true
- 0 = sync_C2OUT will not cause period event

bit 1 **PxPRSC1:** PSMCx Period Event occurs on sync_C1OUT output
- 1 = Period event will occur and PSMCxTMR will reset when sync_C1OUT output goes true
- 0 = sync_C1OUT will not cause period event

bit 0 **PxPRST:** PSMCx Period Event occurs on Time Base match
- 1 = Period event will occur and PSMCxTMR will reset when PSMCxTMR = PSMCxPR
- 0 = Time base will not cause period event

Note 1: Sources are not mutually exclusive: more than one source can force the period event and reset the PSMCxTMR.

© 2012-2014 Microchip Technology Inc.

REGISTER 24-15: PSMCxASDC: PSMC AUTO-SHUTDOWN CONTROL REGISTER

R/W-0/0	R/W-0/0	R/W-0/0	U-0	U-0	U-0	U-0	R/W-0/0
PxASE	PxASDEN	PxARSEN	—	—	—	—	PxASDOV
bit 7							bit 0

Legend:		
R = Readable bit	W = Writable bit	U = Unimplemented bit, read as ‘0’
u = Bit is unchanged	x = Bit is unknown	-n/n = Value at POR and BOR/Value at all other Resets
‘1’ = Bit is set	‘0’ = Bit is cleared	

bit 7 **PxASE:** PWM Auto-Shutdown Event Status bit(1)
- 1 = A shutdown event has occurred, PWM outputs are inactive and in their shutdown states
- 0 = PWM outputs are operating normally

bit 6 **PxASDEN:** PWM Auto-Shutdown Enable bit
- 1 = Auto-shutdown is enabled. If any of the sources in PSMCxASDS assert a logic ‘1’, then the outputs will go into their auto-shutdown state and PSMCxSIF flag will be set.
- 0 = Auto-shutdown is disabled

bit 5 **PxARSEN:** PWM Auto-Restart Enable bit
- 1 = PWM restarts automatically when the shutdown condition is removed.
- 0 = The PxASE bit must be cleared in firmware to restart PWM after the auto-shutdown condition is cleared.

bit 4-1 **Unimplemented:** Read as ‘0’

bit 0 **PxASDOV:** PWM Auto-Shutdown Override bit

PxASDEN = 1:
- 1 = Force PxASDL[n] levels on the PSMCx[n] pins without causing a PSMCxSIF interrupt
- 0 = Normal PWM and auto-shutdown execution

PxASDEN = 0:
No effect

Note 1: PASE bit may be set in software. When this occurs the functionality is the same as that caused by hardware.

REGISTER 24-16: PSMCxASDL: PSMC AUTO-SHUTDOWN OUTPUT LEVEL REGISTER

U-0	U-0	R/W-0/0	R/W-0/0	R/W-0/0	R/W-0/0	R/W-0/0	R/W-0/0
—	—	PxASDLF(1)	PxASDLE(1)	PxASDLD(1)	PxASDLC(1)	PxASDLB	PxASDLA
bit 7							bit 0

Legend:		
R = Readable bit	W = Writable bit	U = Unimplemented bit, read as ‘0’
u = Bit is unchanged	x = Bit is unknown	-n/n = Value at POR and BOR/Value at all other Resets
‘1’ = Bit is set	‘0’ = Bit is cleared	

bit 7-6 **Unimplemented:** Read as ‘0’

bit 5 **PxASDLF:** PSMCx Output F Auto-Shutdown Pin Level bit(1)
- 1 = When auto-shutdown is asserted, pin PSMCxF will drive logic ‘1’
- 0 = When auto-shutdown is asserted, pin PSMCxF will drive logic ‘0’

bit 4 **PxASDLE:** PSMCx Output E Auto-Shutdown Pin Level bit(1)
- 1 = When auto-shutdown is asserted, pin PSMCxE will drive logic ‘1’
- 0 = When auto-shutdown is asserted, pin PSMCxE will drive logic ‘0’

bit 3 **PxASDLD:** PSMCx Output D Auto-Shutdown Pin Level bit(1)
- 1 = When auto-shutdown is asserted, pin PSMCxD will drive logic ‘1’
- 0 = When auto-shutdown is asserted, pin PSMCxD will drive logic ‘0’

bit 2 **PxASDLC:** PSMCx Output C Auto-Shutdown Pin Level bit(1)
- 1 = When auto-shutdown is asserted, pin PSMCxC will drive logic ‘1’
- 0 = When auto-shutdown is asserted, pin PSMCxC will drive logic ‘0’

bit 1 **PxASDLB:** PSMCx Output B Auto-Shutdown Pin Level bit
- 1 = When auto-shutdown is asserted, pin PSMCxB will drive logic ‘1’
- 0 = When auto-shutdown is asserted, pin PSMCxB will drive logic ‘0’

bit 0 **PxASDLA:** PSMCx Output A Auto-Shutdown Pin Level bit
- 1 = When auto-shutdown is asserted, pin PSMCxA will drive logic ‘1’
- 0 = When auto-shutdown is asserted, pin PSMCxA will drive logic ‘0’

Note 1: These bits are not implemented on PSMC2.

© 2012-2014 Microchip Technology Inc.

REGISTER 24-17: PSMCxASDS: PSMC AUTO-SHUTDOWN SOURCE REGISTER

R/W-0/0	U-0	U-0	R/W-0/0	R/W-0/0	R/W-0/0	R/W-0/0	U-0
PxASDSIN	—	—	PxASDSC4	PxASDSC3	PxASDSC2	PxASDSC1	—
bit 7							bit 0

Legend:		
R = Readable bit	W = Writable bit	U = Unimplemented bit, read as ‘0’
u = Bit is unchanged	x = Bit is unknown	-n/n = Value at POR and BOR/Value at all other Resets
‘1’ = Bit is set	‘0’ = Bit is cleared	

bit 7 **PxASDSIN:** Auto-shutdown occurs on PSMCxIN pin
`1` = Auto-shutdown will occur when PSMCxIN pin goes true
`0` = PSMCxIN pin will not cause auto-shutdown

bit 6-5 **Unimplemented:** Read as ‘`0`’

bit 4 **PxASDSC4:** Auto-shutdown occurs on sync_C4OUT output
`1` = Auto-shutdown will occur when sync_C4OUT output goes true
`0` = sync_C4OUT will not cause auto-shutdown

bit 3 **PxASDSC3:** Auto-shutdown occurs on sync_C3OUT output
`1` = Auto-shutdown will occur when sync_C3OUT output goes true
`0` = sync_C3OUT will not cause auto-shutdown

bit 2 **PxASDSC2:** Auto-shutdown occurs on sync_C2OUT output
`1` = Auto-shutdown will occur when sync_C2OUT output goes true
`0` = sync_C2OUT will not cause auto-shutdown

bit 1 **PxASDSC1:** Auto-shutdown occurs on sync_C1OUT output
`1` = Auto-shutdown will occur when sync_C1OU output goes true
`0` = sync_C1OU will not cause auto-shutdown

bit 0 **Unimplemented:** Read as ‘`0`’

REGISTER 24-18: PSMCxTMRL: PSMC TIME BASE COUNTER LOW REGISTER

R/W-0/0	R/W-0/0	R/W-0/0	R/W-0/0	R/W-0/0	R/W-0/0	R/W-0/0	R/W-0/0
PSMCxTMRL<7:0>							
bit 7							bit 0

Legend:		
R = Readable bit	W = Writable bit	U = Unimplemented bit, read as ‘0’
u = Bit is unchanged	x = Bit is unknown	-n/n = Value at POR and BOR/Value at all other Resets
‘1’ = Bit is set	‘0’ = Bit is cleared	

bit 7-0 **PSMCxTMRL<7:0>:** 16-bit PSMCx Time Base Counter Least Significant bits
= PSMCxTMR<7:0>

REGISTER 24-19: PSMCxTMRH: PSMC TIME BASE COUNTER HIGH REGISTER

R/W-0/0	R/W-0/0	R/W-0/0	R/W-0/0	R/W-0/0	R/W-0/0	R/W-0/0	R/W-1/1
PSMCxTMRH<7:0>							
bit 7							bit 0

Legend:		
R = Readable bit	W = Writable bit	U = Unimplemented bit, read as ‘0’
u = Bit is unchanged	x = Bit is unknown	-n/n = Value at POR and BOR/Value at all other Resets
‘1’ = Bit is set	‘0’ = Bit is cleared	

bit 7-0 **PSMCxTMRH<7:0>:** 16-bit PSMCx Time Base Counter Most Significant bits
= PSMCxTMR<15:8>

© 2012-2014 Microchip Technology Inc.

REGISTER 24-20: PSMCxPHL: PSMC PHASE COUNT LOW BYTE REGISTER

R/W-0/0	R/W-0/0	R/W-0/0	R/W-0/0	R/W-0/0	R/W-0/0	R/W-0/0	R/W-0/0
PSMCxPHL<7:0>							
bit 7							bit 0

Legend:		
R = Readable bit	W = Writable bit	U = Unimplemented bit, read as ‘0’
u = Bit is unchanged	x = Bit is unknown	-n/n = Value at POR and BOR/Value at all other Resets
‘1’ = Bit is set	‘0’ = Bit is cleared	

bit 7-0 **PSMCxPHL<7:0>:** 16-bit Phase Count Least Significant bits
= PSMCxPH<7:0>

REGISTER 24-21: PSMCxPHH: PSMC PHASE COUNT HIGH BYTE REGISTER

R/W-0/0	R/W-0/0	R/W-0/0	R/W-0/0	R/W-0/0	R/W-0/0	R/W-0/0	R/W-0/0
PSMCxPHH<7:0>							
bit 7							bit 0

Legend:		
R = Readable bit	W = Writable bit	U = Unimplemented bit, read as ‘0’
u = Bit is unchanged	x = Bit is unknown	-n/n = Value at POR and BOR/Value at all other Resets
‘1’ = Bit is set	‘0’ = Bit is cleared	

bit 7-0 **PSMCxPHH<7:0>:** 16-bit Phase Count Most Significant bits
= PSMCxPH<15:8>

REGISTER 24-22: PSMCxDCL: PSMC DUTY CYCLE COUNT LOW BYTE REGISTER

R/W-0/0	R/W-0/0	R/W-0/0	R/W-0/0	R/W-0/0	R/W-0/0	R/W-0/0	R/W-0/0
PSMCxDCL<7:0>							
bit 7							bit 0

Legend:		
R = Readable bit	W = Writable bit	U = Unimplemented bit, read as ‘0’
u = Bit is unchanged	x = Bit is unknown	-n/n = Value at POR and BOR/Value at all other Resets
‘1’ = Bit is set	‘0’ = Bit is cleared	

bit 7-0 **PSMCxDCL<7:0>:** 16-bit Duty Cycle Count Least Significant bits
= PSMCxDC<7:0>

REGISTER 24-23: PSMCxDCH: PSMC DUTY CYCLE COUNT HIGH REGISTER

R/W-0/0	R/W-0/0	R/W-0/0	R/W-0/0	R/W-0/0	R/W-0/0	R/W-0/0	R/W-0/0
PSMCxDCH<7:0>							
bit 7							bit 0

Legend:		
R = Readable bit	W = Writable bit	U = Unimplemented bit, read as ‘0’
u = Bit is unchanged	x = Bit is unknown	-n/n = Value at POR and BOR/Value at all other Resets
‘1’ = Bit is set	‘0’ = Bit is cleared	

bit 7-0 **PSMCxDCH<7:0>:** 16-bit Duty Cycle Count Most Significant bits
= PSMCxDC<15:8>

© 2012-2014 Microchip Technology Inc.

REGISTER 24-24: PSMCxPRL: PSMC PERIOD COUNT LOW BYTE REGISTER

R/W-0/0	R/W-0/0	R/W-0/0	R/W-0/0	R/W-0/0	R/W-0/0	R/W-0/0	R/W-0/0
PSMCxPRL<7:0>							
bit 7							bit 0

Legend:		
R = Readable bit	W = Writable bit	U = Unimplemented bit, read as ‘0’
u = Bit is unchanged	x = Bit is unknown	-n/n = Value at POR and BOR/Value at all other Resets
‘1’ = Bit is set	‘0’ = Bit is cleared	

bit 7-0 **PSMCxPRL<7:0>:** 16-bit Period Time Least Significant bits
= PSMCxPR<7:0>

REGISTER 24-25: PSMCxPRH: PSMC PERIOD COUNT HIGH BYTE REGISTER

R/W-0/0	R/W-0/0	R/W-0/0	R/W-0/0	R/W-0/0	R/W-0/0	R/W-0/0	R/W-0/0
PSMCxPRH<7:0>							
bit 7							bit 0

Legend:		
R = Readable bit	W = Writable bit	U = Unimplemented bit, read as ‘0’
u = Bit is unchanged	x = Bit is unknown	-n/n = Value at POR and BOR/Value at all other Resets
‘1’ = Bit is set	‘0’ = Bit is cleared	

bit 7-0 **PSMCxPRH<7:0>:** 16-bit Period Time Most Significant bits
= PSMCxPR<15:8>

REGISTER 24-26: PSMCxDBR: PSMC RISING EDGE DEAD-BAND TIME REGISTER

R/W-0/0	R/W-0/0	R/W-0/0	R/W-0/0	R/W-0/0	R/W-0/0	R/W-0/0	R/W-0/0
PSMCxDBR<7:0>							
bit 7							bit 0

Legend:		
R = Readable bit	W = Writable bit	U = Unimplemented bit, read as ‘0’
u = Bit is unchanged	x = Bit is unknown	-n/n = Value at POR and BOR/Value at all other Resets
‘1’ = Bit is set	‘0’ = Bit is cleared	

bit 7-0 **PSMCxDBR<7:0>:** Rising Edge Dead-Band Time bits
= Unsigned number of PSMCx psmc_clk clock periods in rising edge dead band

REGISTER 24-27: PSMCxDBF: PSMC FALLING EDGE DEAD-BAND TIME REGISTER

R/W-0/0	R/W-0/0	R/W-0/0	R/W-0/0	R/W-0/0	R/W-0/0	R/W-0/0	R/W-0/0
PSMCxDBF<7:0>							
bit 7							bit 0

Legend:		
R = Readable bit	W = Writable bit	U = Unimplemented bit, read as ‘0’
u = Bit is unchanged	x = Bit is unknown	-n/n = Value at POR and BOR/Value at all other Resets
‘1’ = Bit is set	‘0’ = Bit is cleared	

bit 7-0 **PSMCxDBF<7:0>:** Falling Edge Dead-Band Time bits
= Unsigned number of PSMCx psmc_clk clock periods in falling edge dead band

REGISTER 24-28: PSMCxFFA: PSMC FRACTIONAL FREQUENCY ADJUST REGISTER

U-0	U-0	U-0	U-0	R/W-0/0	R/W-0/0	R/W-0/0	R/W-0/0
—	—	—	—	PSMCxFFA<3:0>			
bit 7							bit 0

Legend:		
R = Readable bit	W = Writable bit	U = Unimplemented bit, read as ‘0’
u = Bit is unchanged	x = Bit is unknown	-n/n = Value at POR and BOR/Value at all other Resets
‘1’ = Bit is set	‘0’ = Bit is cleared	

bit 7-4 **Unimplemented:** Read as ‘0’

bit 3-0 **PSMCxFFA<3:0>:** Fractional Frequency Adjustment bits
= Unsigned number of fractional PSMCx psmc_clk clock periods to add to each period event time. The fractional time period = 1/(16*psmc_clk)

© 2012-2014 Microchip Technology Inc.

REGISTER 24-29: PSMCxBLKR: PSMC RISING EDGE BLANKING TIME REGISTER

R/W-0/0	R/W-0/0	R/W-0/0	R/W-0/0	R/W-0/0	R/W-0/0	R/W-0/0	R/W-0/0
PSMCxBLKR<7:0>							
bit 7							bit 0

Legend:		
R = Readable bit	W = Writable bit	U = Unimplemented bit, read as ‘0’
u = Bit is unchanged	x = Bit is unknown	-n/n = Value at POR and BOR/Value at all other Resets
‘1’ = Bit is set	‘0’ = Bit is cleared	

bit 7-0 **PSMCxBLKR<7:0>:** Rising Edge Blanking Time bits
= Unsigned number of PSMCx psmc_clk clock periods in rising edge blanking

REGISTER 24-30: PSMCxBLKF: PSMC FALLING EDGE BLANKING TIME REGISTER

R/W-0/0	R/W-0/0	R/W-0/0	R/W-0/0	R/W-0/0	R/W-0/0	R/W-0/0	R/W-0/0
PSMCxBLKF<7:0>							
bit 7							bit 0

Legend:		
R = Readable bit	W = Writable bit	U = Unimplemented bit, read as ‘0’
u = Bit is unchanged	x = Bit is unknown	-n/n = Value at POR and BOR/Value at all other Resets
‘1’ = Bit is set	‘0’ = Bit is cleared	

bit 7-0 **PSMCxBLKF<7:0>:** Falling Edge Blanking Time bits
= Unsigned number of PSMCx psmc_clk clock periods in falling edge blanking

REGISTER 24-31: PSMCxSTR0: PSMC STEERING CONTROL REGISTER 0

U-0	U-0	R/W-0/0	R/W-0/0	R/W-0/0	R/W-0/0	R/W-0/0	R/W-1/1
—	—	PxSTRF(2)	PxSTRE(2)	PxSTRD(2)	PxSTRC(2)	PxSTRB	PxSTRA
bit 7							bit 0

Legend:		
R = Readable bit	W = Writable bit	U = Unimplemented bit, read as ‘0’
u = Bit is unchanged	x = Bit is unknown	-n/n = Value at POR and BOR/Value at all other Resets
‘1’ = Bit is set	‘0’ = Bit is cleared	

bit 7-6 **Unimplemented:** Read as ‘0’

bit 5 **PxSTRF**: PWM Steering PSMCxF Output Enable bit(2)

If PxMODE<3:0> = 0000 (Single-phase PWM):
1 = Single PWM output is active on pin PSMCxF
0 = Single PWM output is not active on pin PSMCxF. PWM drive is in inactive state

If PxMODE<3:0> = 0001 (Complementary Single-phase PWM):
1 = Complementary PWM output is active on pin PSMCxF
0 = Complementary PWM output is not active on pin PSMCxOUT5. PWM drive is in inactive state

IF PxMODE<3:0> = 1100 (3-phase Steering):(1)
1 = PSMCxD and PSMCxE are high. PSMCxA, PMSCxB, PSMCxC and PMSCxF are low.
0 = 3-phase output combination is not active

bit 4 **PxSTRE**: PWM Steering PSMCxE Output Enable bit(2)

If PxMODE<3:0> = 000x (single-phase PWM or Complementary PWM):
1 = Single PWM output is active on pin PSMCxE
0 = Single PWM output is not active on pin PSMCxE. PWM drive is in inactive state

IF PxMODE<3:0> = 1100 (3-phase Steering):(1)
1 = PSMCxB and PSMCxE are high. PSMCxA, PMSCxC, PSMCxD and PMSCxF are low.
0 = 3-phase output combination is not active

bit 3 **PxSTRD**: PWM Steering PSMCxD Output Enable bit(2)

If PxMODE<3:0> = 0000 (Single-phase PWM):
1 = Single PWM output is active on pin PSMCxD
0 = Single PWM output is not active on pin PSMCxD. PWM drive is in inactive state

If PxMODE<3:0> = 0001 (Complementary single-phase PWM):
1 = Complementary PWM output is active on pin PSMCxD
0 = Complementary PWM output is not active on pin PSMCxD. PWM drive is in inactive state

IF PxMODE<3:0> = 1100 (3-phase Steering):(1)
1 = PSMCxB and PSMCxC are high. PSMCxA, PMSCxD, PSMCxE and PMSCxF are low.
0 = 3-phase output combination is not active

bit 2 **PxSTRC**: PWM Steering PSMCxC Output Enable bit(2)

If PxMODE<3:0> = 000x (Single-phase PWM or Complementary PWM):
1 = Single PWM output is active on pin PSMCxC
0 = Single PWM output is not active on pin PSMCxC. PWM drive is in inactive state

IF PxMODE<3:0> = 1100 (3-phase Steering):(1)
1 = PSMCxC and PSMCxF are high. PSMCxA, PMSCxB, PSMCxD and PMSCxE are low.
0 = 3-phase output combination is not active

© 2012-2014 Microchip Technology Inc.

REGISTER 24-31: PSMCxSTR0: PSMC STEERING CONTROL REGISTER 0

bit 1 **PxSTRB**: PWM Steering PSMCxB Output Enable bit

If PxMODE<3:0> = 0000 (Single-phase PWM):
1 = Single PWM output is active on pin PSMCxOUT1
0 = Single PWM output is not active on pin PSMCxOUT1. PWM drive is in inactive state

If PxMODE<3:0> = 0001 (Complementary Single-phase PWM):
1 = Complementary PWM output is active on pin PSMCxB
0 = Complementary PWM output is not active on pin PSMCxB. PWM drive is in inactive state

IF PxMODE<3:0> = 1100 (3-phase Steering):(1)
1 = PSMCxA and PSMCxF are high. PSMCxB, PMSCxC, PSMCxD and PMSCxE are low.
0 = 3-phase output combination is not active

bit 0 **PxSTRA**: PWM Steering PSMCxA Output Enable bit

If PxMODE<3:0> = 000x (Single-phase PWM or Complementary PWM):
1 = Single PWM output is active on pin PSMCxA
0 = Single PWM output is not active on pin PSMCxA. PWM drive is in inactive state

IF PxMODE<3:0> = 1100 (3-phase Steering):(1)
1 = PSMCxA and PSMCxD are high. PSMCxB, PMSCxC, PSMCxE and PMSCxF are low.
0 = 3-phase output combination is not active

Note 1: In 3-phase Steering mode, only one PSTRx bit should be set at a time. If more than one is set, then the lowest bit number steering combination has precedence.

2: These bits are not implemented on PSMC2.

REGISTER 24-32: PSMCxSTR1: PSMC STEERING CONTROL REGISTER 1

R/W-0/0	U-0	U-0	U-0	U-0	U-0	R/W-0/0	R/W-0/0
PxSSYNC	—	—	—	—	—	PxLSMEN	PxHSMEN
bit 7							bit 0

Legend:		
R = Readable bit	W = Writable bit	U = Unimplemented bit, read as ‘0’
u = Bit is unchanged	x = Bit is unknown	-n/n = Value at POR and BOR/Value at all other Resets
‘1’ = Bit is set	‘0’ = Bit is cleared	

bit 7 **PxSSYNC**: PWM Steering Synchronization bit
`1` = PWM outputs are updated on period boundary
`0` = PWM outputs are updated immediately

bit 6-2 **Unimplemented:** Read as ‘`0`’

bit 1 **PxLSMEN**: 3-Phase Steering Low Side Modulation Enable bit

PxMODE = `1100`:
`1` = Low side driver PSMCxB, PSMCxD and PSMCxF outputs are modulated according to PSMCxMDL when the output is high and driven low without modulation when the output is low.
`0` = PSMCxB, PSMCxD, and PSMCxF outputs are driven high and low by PSMCxSTR0 control without modulation.

PxMODE <> `1100`:
No effect on output

bit 0 **PxHSMEN**: 3-Phase Steering High Side Modulation Enable bit

PxMODE = `1100`:
`1` = High side driver PSMCxA, PSMCxC and PSMCxE outputs are modulated according to PSMCxMDL when the output is high and driven low without modulation when the output is low.
`0` = PSMCxA, PSMCxC and PSMCxE outputs are driven high and low by PSMCxSTR0 control without modulation.

PxMODE <> `1100`:
No effect on output

© 2012-2014 Microchip Technology Inc.

REGISTER 24-33: PSMCxINT: PSMC TIME BASE INTERRUPT CONTROL REGISTER

R/W-0/0	R/W-0/0	R/W-0/0	R/W-0/0	R/W-0/0	R/W-0/0	R/W-0/0	R/W-0/0
PxTOVIE	PxTPHIE	PxTDCIE	PxTPRIE	PxTOVIF	PxTPHIF	PxTDCIF	PxTPRIF
bit 7							bit 0

Legend:		
R = Readable bit	W = Writable bit	U = Unimplemented bit, read as ‘0’
u = Bit is unchanged	x = Bit is unknown	-n/n = Value at POR and BOR/Value at all other Resets
‘1’ = Bit is set	‘0’ = Bit is cleared	

bit 7 **PxTOVIE**: PSMC Time Base Counter Overflow Interrupt Enable bit
1 = Time base counter overflow interrupts are enabled
0 = Time base counter overflow interrupts are disabled

bit 6 **PxTPHIE**: PSMC Time Base Phase Interrupt Enable bit
1 = Time base phase match interrupts are enabled
0 = Time base phase match interrupts are disabled

bit 5 **PxTDCIE**: PSMC Time Base Duty Cycle Interrupt Enable bit
1 = Time base duty cycle match interrupts are enabled
0 = Time base duty cycle match interrupts are disabled

bit 4 **PxTPRIE**: PSMC Time Base Period Interrupt Enable bit
1 = Time base period match interrupts are enabled
0 = Time base period match Interrupts are disabled

bit 3 **PxTOVIF**: PSMC Time Base Counter Overflow Interrupt Flag bit
1 = The 16-bit PSMCxTMR has overflowed from FFFFh to 0000h
0 = The 16-bit PSMCxTMR counter has not overflowed

bit 2 **PxTPHIF**: PSMC Time Base Phase Interrupt Flag bit
1 = The 16-bit PSMCxTMR counter has matched PSMCxPH<15:0>
0 = The 16-bit PSMCxTMR counter has not matched PSMCxPH<15:0>

bit 1 **PxTDCIF**: PSMC Time Base Duty Cycle Interrupt Flag bit
1 = The 16-bit PSMCxTMR counter has matched PSMCxDC<15:0>
0 = The 16-bit PSMCxTMR counter has not matched PSMCxDC<15:0>

bit 0 **PxTPRIF**: PSMC Time Base Period Interrupt Flag bit
1 = The 16-bit PSMCxTMR counter has matched PSMCxPR<15:0>
0 = The 16-bit PSMCxTMR counter has not matched PSMCxPR<15:0>

TABLE 24-5: SUMMARY OF REGISTERS ASSOCIATED WITH PSMC

Name	Bit7	Bit6	Bit5	Bit4	BIt3	Bit2	Bit1	Bit0	Register on Page
INTCON	GIE	PEIE	TMR0IE	INTE	IOCIE	TMR0IF	INTF	IOCIF	93
ODCONC	ODC7	ODC6	ODC5	ODC4	ODC3	ODC2	ODC1	ODC0	143
PIE4	—	PSMC3TIE	PSMC2TIE	PSMC1TIE	—	PSMC3SIE	PSMC2SIE	PSMC1SIE	97
PIR4	—	PSMC3TIF	PSMC2TIF	PSMC1TIF	—	PSMC3SIF	PSMC2SIF	PSMC1SIF	101
PSMCxASDC	PxASE	PxASDEN	PxARSEN	—	—	—	—	PxASDOV	257
PSMCxASDL	—	—	PxASDLF(1)	PxASDLE(1)	PxASDLD(1)	PxASDLC(1)	PxASDLB	PxASDLA	258
PSMCxASDS	PxASDSIN	—	—	PxASDSC4	PxASDSC3	PxASDSC2	PxASDSC1	—	259
PSMCxBLKF	PSMCxBLKF<7:0>								265
PSMCxBLKR	PSMCxBLKR<7:0>								265
PSMCxBLNK	—	—	PxFEBM1	PxFEBM0	—	—	PxREBM1	PxREBM0	252
PSMCxCLK	—	—	PxCPRE<1:0>		—	—	PxCSRC<1:0>		251
PSMCxCON	PSMCxEN	PSMCxLD	PxDBFE	PxDBRE	PxMODE<3:0>				247
PSMCxDBF	PSMCxDBF<7:0>								264
PSMCxDBR	PSMCxDBR<7:0>								264
PSMCxDCH	PSMCxDC<15:8>								262
PSMCxDCL	PSMCxDC<7:0>								262
PSMCxDCS	PxDCSIN	—	—	PxDCSC4	PxDCSC3	PxDCSC2	PxDCSC1	PxDCST	255
PSMCxFEBS	PxFEBSIN	—	—	PxFEBSC4	PxFEBSC3	PxFEBSC2	PxFEBSC1	—	253
PSMCxFFA	—	—	—	—	PSMCxFFA<3:0>				264
PSMCxINT	PxTOVIE	PxTPHIE	PxTDCIE	PxTPRIE	PxTOVIF	PxTPHIF	PxTDCIF	PxTPRIF	269
PSMCxMDL	PxMDLEN	PxMDLPOL	PxMDLBIT	—	PxMSRC<3:0>				248
PSMCxOEN	—	—	PxOEF(1)	PxOEE(1)	PxOED(1)	PxOEC(1)	PxOEB	PxOEA	251
PSMCxPHH	PSMCxPH<15:8>								261
PSMCxPHL	PSMCxPH<7:0>								261
PSMCxPHS	PxPHSIN	—	—	PxPHSC4	PxPHSC3	PxPHSC2	PxPHSC1	PxPHST	254
PSMCxPOL	—	PxPOLIN	PxPOLF(1)	PxPOLE(1)	PxPOLD(1)	PxPOLC(1)	PxPOLB	PxPOLA	252
PSMCxPRH	PSMCxPR<15:8>								263
PSMCxPRL	PSMCxPR<7:0>								263
PSMCxPRS	PxPRSIN	—	—	PxPRSC4	PxPRSC3	PxPRSC2	PxPRSC1	PxPRST	256
PSMCxREBS	PxREBSIN	—	—	PxREBSC4	PxREBSC3	PxREBSC2	PxREBSC1	—	253
PSMCxSTR0	—	—	PxSTRF(1)	PxSTRE(1)	PxSTRD(1)	PxSTRC(1)	PxSTRB	PxSTRA	266
PSMCxSTR1	PxSSYNC	—	—	—	—	—	PxLSMEN	PxHSMEN	268
PSMCxSYNC	PxPOFST	PxPRPOL	PxDCPOL	—	—	—	PxSYNC<1:0>		249
PSMCxTMRH	PSMCxTMR<15:8>								260
PSMCxTMRL	PSMCxTMR<7:0>								260
SLRCONC	SLRC7	SLRC6	SLRC5	SLRC4	SLRC3	SLCR2	SRC1	SLRC0	143
TRISC	TRISC7	TRISC6	TRISC5	TRISC4	TRISC3	TRISC2	TRISC1	TRISC0	142

Legend: — = unimplemented location, read as '0'. Shaded cells are not used by PSMC module.

Note 1: Unimplemented in PSMC2.

© 2012-2014 Microchip Technology Inc.

25.0 CAPTURE/COMPARE/PWM MODULES

The Capture/Compare/PWM module is a peripheral that allows the user to time and control different events, and to generate Pulse-Width Modulation (PWM) signals. In Capture mode, the peripheral allows the timing of the duration of an event. The Compare mode allows the user to trigger an external event when a predetermined amount of time has expired. The PWM mode can generate Pulse-Width Modulated signals of varying frequency and duty cycle.

This family of devices contains two standard Capture/Compare/PWM modules (CCP1, CCP2 and CCP3).

The Capture and Compare functions are identical for all CCP modules.

Note 1:	In devices with more than one CCP module, it is very important to pay close attention to the register names used. A number placed after the module acronym is used to distinguish between separate modules. For example, the CCP1CON and CCP2CON control the same operational aspects of two completely different CCP modules.
2:	Throughout this section, generic references to a CCP module in any of its operating modes may be interpreted as being equally applicable to CCPx module. Register names, module signals, I/O pins, and bit names may use the generic designator ‘x’ to indicate the use of a numeral to distinguish a particular module, when required.

25.1 Capture Mode

The Capture mode function described in this section is available and identical for all CCP modules.

Capture mode makes use of the 16-bit Timer1 resource. When an event occurs on the CCPx pin, the 16-bit CCPRxH:CCPRxL register pair captures and stores the 16-bit value of the TMR1H:TMR1L register pair, respectively. An event is defined as one of the following and is configured by the CCPxM<3:0> bits of the CCPxCON register:

- Every falling edge
- Every rising edge
- Every 4th rising edge
- Every 16th rising edge

When a capture is made, the Interrupt Request Flag bit CCPxIF of the PIRx register is set. The interrupt flag must be cleared in software. If another capture occurs before the value in the CCPRxH, CCPRxL register pair is read, the old captured value is overwritten by the new captured value.

Figure 25-1 shows a simplified diagram of the capture operation.

25.1.1 CCP PIN CONFIGURATION

In Capture mode, the CCPx pin should be configured as an input by setting the associated TRIS control bit.

Also, the CCP2 pin function can be moved to alternative pins using the APFCON register. Refer to **Section 13.1 "Alternate Pin Function"** for more details.

Note:	If the CCPx pin is configured as an output, a write to the port can cause a capture condition.

FIGURE 25-1: CAPTURE MODE OPERATION BLOCK DIAGRAM

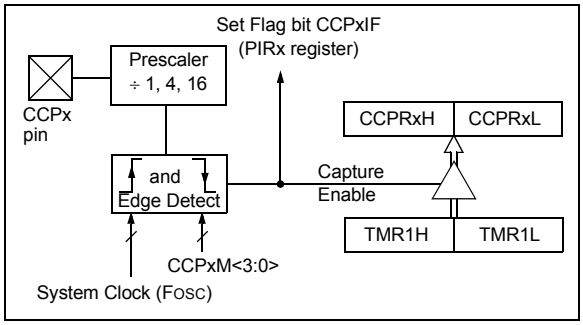

25.1.2 TIMER1 MODE RESOURCE

Timer1 must be running in Timer mode or Synchronized Counter mode for the CCP module to use the capture feature. In Asynchronous Counter mode, the capture operation may not work.

See **Section 22.0 "Timer1 Module with Gate Control"** for more information on configuring Timer1.

25.1.3 SOFTWARE INTERRUPT MODE

When the Capture mode is changed, a false capture interrupt may be generated. The user should keep the CCPxIE interrupt enable bit of the PIEx register clear to avoid false interrupts. Additionally, the user should clear the CCPxIF interrupt flag bit of the PIRx register following any change in Operating mode.

Note:	Clocking Timer1 from the system clock (FOSC) should not be used in Capture mode. In order for Capture mode to recognize the trigger event on the CCPx pin, Timer1 must be clocked from the instruction clock (FOSC/4) or from an external clock source.

25.1.4 CCP PRESCALER

There are four prescaler settings specified by the CCPxM<3:0> bits of the CCPxCON register. Whenever the CCP module is turned off, or the CCP module is not in Capture mode, the prescaler counter is cleared. Any Reset will clear the prescaler counter.

Switching from one capture prescaler to another does not clear the prescaler and may generate a false interrupt. To avoid this unexpected operation, turn the module off by clearing the CCPxCON register before changing the prescaler. Equation 25-1 demonstrates the code to perform this function.

EXAMPLE 25-1: CHANGING BETWEEN CAPTURE PRESCALERS

```
BANKSEL CCPxCON     ;Set Bank bits to point
                    ;to CCPxCON
CLRF    CCPxCON     ;Turn CCP module off
MOVLW   NEW_CAPT_PS ;Load the W reg with
                    ;the new prescaler
                    ;move value and CCP ON
MOVWF   CCPxCON     ;Load CCPxCON with this
                    ;value
```


© 2012-2014 Microchip Technology Inc.

25.1.5 CAPTURE DURING SLEEP

Capture mode depends upon the Timer1 module for proper operation. There are two options for driving the Timer1 module in Capture mode. It can be driven by the instruction clock (FOSC/4), or by an external clock source.

When Timer1 is clocked by FOSC/4, Timer1 will not increment during Sleep. When the device wakes from Sleep, Timer1 will continue from its previous state.

Capture mode will operate during Sleep when Timer1 is clocked by an external clock source.

25.1.6 ALTERNATE PIN LOCATIONS

This module incorporates I/O pins that can be moved to other locations with the use of the alternate pin function register APFCON. To determine which pins can be moved and what their default locations are upon a Reset, see **Section 13.1 "Alternate Pin Function"** for more information.

25.2 Compare Mode

The Compare mode function described in this section is available and identical for all CCP modules.

Compare mode makes use of the 16-bit Timer1 resource. The 16-bit value of the CCPRxH:CCPRxL register pair is constantly compared·against the 16-bit value of the TMR1H:TMR1L register pair. When a match occurs, one of the following events can occur:

- Toggle the CCPx output
- Set the CCPx output
- Clear the CCPx output
- Generate an Auto-conversion Trigger
- Generate a Software Interrupt

The action on the pin is based on the value of the CCPxM<3:0> control bits of the CCPxCON register. At the same time, the interrupt flag CCPxIF bit is set.

All Compare modes can generate an interrupt.

Figure 25-2 shows a simplified diagram of the compare operation.

FIGURE 25-2: COMPARE MODE OPERATION BLOCK DIAGRAM

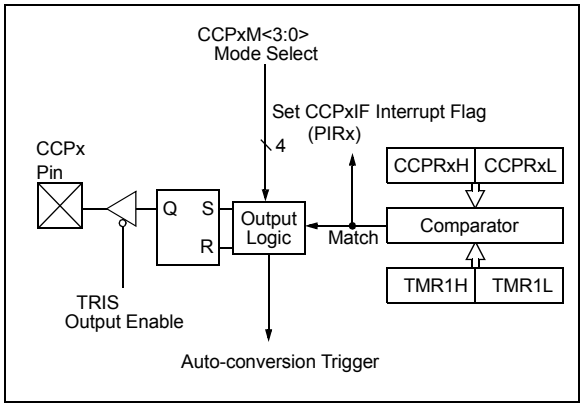

25.2.1 CCPX PIN CONFIGURATION

The user must configure the CCPx pin as an output by clearing the associated TRIS bit.

The CCP2 pin function can be moved to alternate pins using the APFCON register (Register 13-1). Refer to **Section 13.1 "Alternate Pin Function"** for more details.

Note:	Clearing the CCPxCON register will force the CCPx compare output latch to the default low level. This is not the PORT I/O data latch.

25.2.2 TIMER1 MODE RESOURCE

In Compare mode, Timer1 must be running in either Timer mode or Synchronized Counter mode. The compare operation may not work in Asynchronous Counter mode.

See **Section 22.0 "Timer1 Module with Gate Control"** for more information on configuring Timer1.

Note:	Clocking Timer1 from the system clock (FOSC) should not be used in Compare mode. In order for Compare mode to recognize the trigger event on the CCPx pin, TImer1 must be clocked from the instruction clock (FOSC/4) or from an external clock source.

25.2.3 SOFTWARE INTERRUPT MODE

When Generate Software Interrupt mode is chosen (CCPxM<3:0> = `1010`), the CCPx module does not assert control of the CCPx pin (see the CCPxCON register).

25.2.4 AUTO-CONVERSION TRIGGER

When Auto-conversion Trigger mode is chosen (CCPxM<3:0> = `1011`), the CCPx module does the following:

- Resets Timer1
- Starts an ADC conversion if ADC is enabled

The CCPx module does not assert control of the CCPx pin in this mode.

The Auto-conversion Trigger output of the CCP occurs immediately upon a match between the TMR1H, TMR1L register pair and the CCPRxH, CCPRxL register pair. The TMR1H, TMR1L register pair is not reset until the next rising edge of the Timer1 clock. The Auto-conversion Trigger output starts an ADC conversion (if the ADC module is enabled). This allows the CCPRxH, CCPRxL register pair to effectively provide a 16-bit programmable period register for Timer1.

Refer to **Section 17.2.5 "Auto-Conversion Trigger"** for more information.

Note 1:	The Auto-conversion Trigger from the CCP module does not set interrupt flag bit TMR1IF of the PIR1 register.
2:	Removing the match condition by changing the contents of the CCPRxH and CCPRxL register pair, between the clock edge that generates the Auto-conversion Trigger and the clock edge that generates the Timer1 Reset, will preclude the Reset from occurring.

25.2.5 COMPARE DURING SLEEP

The Compare mode is dependent upon the system clock (FOSC) for proper operation. Since FOSC is shut down during Sleep mode, the Compare mode will not function properly during Sleep.

© 2012-2014 Microchip Technology Inc.

25.2.6 ALTERNATE PIN LOCATIONS

This module incorporates I/O pins that can be moved to other locations with the use of the alternate pin function register APFCON. To determine which pins can be moved and what their default locations are upon a Reset, see **Section 13.1 "Alternate Pin Function"** for more information.

25.3 PWM Overview

Pulse-Width Modulation (PWM) is a scheme that provides power to a load by switching quickly between fully on and fully off states. The PWM signal resembles a square wave where the high portion of the signal is considered the on state and the low portion of the signal is considered the off state. The high portion, also known as the pulse width, can vary in time and is defined in steps. A larger number of steps applied, which lengthens the pulse width, also supplies more power to the load. Lowering the number of steps applied, which shortens the pulse width, supplies less power. The PWM period is defined as the duration of one complete cycle or the total amount of on and off time combined.

PWM resolution defines the maximum number of steps that can be present in a single PWM period. A higher resolution allows for more precise control of the pulse width time and in turn the power that is applied to the load.

The term duty cycle describes the proportion of the on time to the off time and is expressed in percentages, where 0% is fully off and 100% is fully on. A lower duty cycle corresponds to less power applied and a higher duty cycle corresponds to more power applied.

Figure 25-3 shows a typical waveform of the PWM signal.

25.3.1 STANDARD PWM OPERATION

The standard PWM function described in this section is available and identical for all CCP modules.

The standard PWM mode generates a Pulse-Width Modulation (PWM) signal on the CCPx pin with up to 10 bits of resolution. The period, duty cycle, and resolution are controlled by the following registers:

- PR2 registers
- T2CON registers
- CCPRxL registers
- CCPxCON registers

Figure 25-4 shows a simplified block diagram of PWM operation.

Note 1: The corresponding TRIS bit must be cleared to enable the PWM output on the CCPx pin.

2: Clearing the CCPxCON register will relinquish control of the CCPx pin.

FIGURE 25-3: CCP PWM OUTPUT SIGNAL

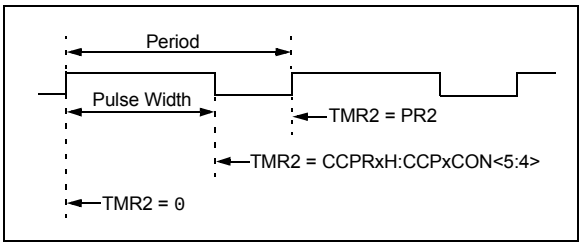

FIGURE 25-4: SIMPLIFIED PWM BLOCK DIAGRAM

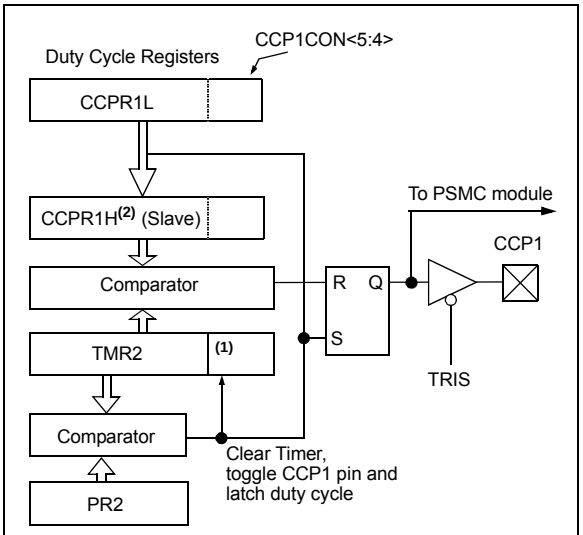

Note 1: The 8-bit timer TMR2 register is concatenated with the 2-bit internal system clock (FOSC), or 2 bits of the prescaler, to create the 10-bit time base.

2: In PWM mode, CCPR1H is a read-only register.

© 2012-2014 Microchip Technology Inc.

25.3.2 SETUP FOR PWM OPERATION

The following steps should be taken when configuring the CCP module for standard PWM operation:

1. Disable the CCPx pin output driver by setting the associated TRIS bit.
2. Load the PR2 register with the PWM period value.
3. Configure the CCP module for the PWM mode by loading the CCPxCON register with the appropriate values.
4. Load the CCPRxL register and the DCxBx bits of the CCPxCON register, with the PWM duty cycle value.
5. Configure and start Timer2:
   - Clear the TMR2IF interrupt flag bit of the PIRx register. See Note below.
   - Configure the T2CKPS bits of the T2CON register with the Timer prescale value.
   - Enable the Timer by setting the TMR2ON bit of the T2CON register.
6. Enable PWM output pin:
   - Wait until the Timer overflows and the TMR2IF bit of the PIR1 register is set. See Note below.
   - Enable the CCPx pin output driver by clearing the associated TRIS bit.

Note:	In order to send a complete duty cycle and period on the first PWM output, the above steps must be included in the setup sequence. If it is not critical to start with a complete PWM signal on the first output, then step 6 may be ignored.

25.3.3 TIMER2 TIMER RESOURCE

The PWM standard mode makes use of the 8-bit Timer2 timer resources to specify the PWM period.

25.3.4 PWM PERIOD

The PWM period is specified by the PR2 register of Timer2. The PWM period can be calculated using the formula of Equation 25-1.

EQUATION 25-1: PWM PERIOD

$$PWM\ Period = [(PR2) + 1] \bullet 4 \bullet T_{OSC} \bullet (TMR2\ Prescale\ Value)$$

Note 1: $T_{OSC} = 1/F_{OSC}$

When TMR2 is equal to PR2, the following three events occur on the next increment cycle:

- TMR2 is cleared
- The CCPx pin is set. (Exception: If the PWM duty cycle = 0%, the pin will not be set.)
- The PWM duty cycle is latched from CCPRxL into CCPRxH.

Note:	The Timer postscaler (see **Section 23.1 "Timer2 Operation"**) is not used in the determination of the PWM frequency.

25.3.5 PWM DUTY CYCLE

The PWM duty cycle is specified by writing a 10-bit value to multiple registers: CCPRxL register and DCxB<1:0> bits of the CCPxCON register. The CCPRxL contains the eight MSbs and the DCxB<1:0> bits of the CCPxCON register contain the two LSbs. CCPRxL and DCxB<1:0> bits of the CCPxCON register can be written to at any time. The duty cycle value is not latched into CCPRxH until after the period completes (i.e., a match between PR2 and TMR2 registers occurs). While using the PWM, the CCPRxH register is read-only.

Equation 25-2 is used to calculate the PWM pulse width.

Equation 25-3 is used to calculate the PWM duty cycle ratio.

EQUATION 25-2: PULSE WIDTH

$$Pulse\ Width = (CCPRxL{:}CCPxCON\langle 5{:}4\rangle) \bullet T_{OSC} \bullet (TMR2\ Prescale\ Value)$$

EQUATION 25-3: DUTY CYCLE RATIO

$$Duty\ Cycle\ Ratio = \frac{(CCPRxL{:}CCPxCON\langle 5{:}4\rangle)}{4(PR2 + 1)}$$

The CCPRxH register and a 2-bit internal latch are used to double buffer the PWM duty cycle. This double buffering is essential for glitchless PWM operation.

The 8-bit timer TMR2 register is concatenated with either the 2-bit internal system clock (FOSC), or 2 bits of the prescaler, to create the 10-bit time base. The system clock is used if the Timer2 prescaler is set to 1:1.

When the 10-bit time base matches the CCPRxH and 2-bit latch, then the CCPx pin is cleared (see Figure 25-4).

25.3.6 PWM RESOLUTION

The resolution determines the number of available duty cycles for a given period. For example, a 10-bit resolution will result in 1024 discrete duty cycles, whereas an 8-bit resolution will result in 256 discrete duty cycles.

The maximum PWM resolution is 10 bits when PR2 is 255. The resolution is a function of the PR2 register value as shown by Equation 25-4.

EQUATION 25-4: PWM RESOLUTION

$$Resolution = \frac{log[4(PR2 + 1)]}{log(2)} \ bits$$

Note: If the pulse width value is greater than the period the assigned PWM pin(s) will remain unchanged.

TABLE 25-1: EXAMPLE PWM FREQUENCIES AND RESOLUTIONS (FOSC = 20 MHz)

PWM Frequency	1.22 kHz	4.88 kHz	19.53 kHz	78.12 kHz	156.3 kHz	208.3 kHz
Timer Prescale	16	4	1	1	1	1
PR2 Value	0xFF	0xFF	0xFF	0x3F	0x1F	0x17
Maximum Resolution (bits)	10	10	10	8	7	6.6

TABLE 25-2: EXAMPLE PWM FREQUENCIES AND RESOLUTIONS (FOSC = 8 MHz)

PWM Frequency	1.22 kHz	4.90 kHz	19.61 kHz	76.92 kHz	153.85 kHz	200.0 kHz
Timer Prescale	16	4	1	1	1	1
PR2 Value	0x65	0x65	0x65	0x19	0x0C	0x09
Maximum Resolution (bits)	8	8	8	6	5	5

© 2012-2014 Microchip Technology Inc.

25.3.7 OPERATION IN SLEEP MODE

In Sleep mode, the TMR2 register will not increment and the state of the module will not change. If the CCPx pin is driving a value, it will continue to drive that value. When the device wakes up, TMR2 will continue from its previous state.

25.3.8 CHANGES IN SYSTEM CLOCK FREQUENCY

The PWM frequency is derived from the system clock frequency. Any changes in the system clock frequency will result in changes to the PWM frequency. See **Section 6.0 "Oscillator Module (with Fail-Safe Clock Monitor)"** for additional details.

25.3.9 EFFECTS OF RESET

Any Reset will force all ports to Input mode and the CCP registers to their Reset states.

TABLE 25-3: SUMMARY OF REGISTERS ASSOCIATED WITH STANDARD PWM

Name	Bit 7	Bit 6	Bit 5	Bit 4	Bit 3	Bit 2	Bit 1	Bit 0	Register on Page
APFCON1	C2OUTSEL	CC1PSEL	SDOSEL	SCKSEL	SDISEL	TXSEL	RXSEL	CCP2SEL	127
APFCON2	—	—	—	—	—	—	—	CCP3SEL	280
CCP1CON	—	—	DC1B<1:0>		CCP1M<3:0>				280
CCP2CON	—	—	DC2B<1:0>		CCP2M<3:0>				280
CCP33CON	—	—	DC3B<1:0>		CCP3M<3:0>				280
INTCON	GIE	PEIE	TMR0IE	INTE	IOCIE	TMR0IF	INTF	IOCIF	93
PIE1	TMR1GIE	ADIE	RCIE	TXIE	SSP1IE	CCP1IE	TMR2IE	TMR1IE	93
PIE2	OSFIE	C2IE	C1IE	EEIE	BCL1IE	C4IE	C3IE	CCP2IE	95
PIE3	—	—	—	CCP3IE	—	—	—	—	96
PIR1	TMR1GIF	ADIF	RCIF	TXIF	SSP1IF	CCP1IF	TMR2IF	TMR1IF	98
PIR2	OSFIF	C2IF	C1IF	EEIF	BCL1IF	C4IF	C3IF	CCP2IF	99
PIR3	—	—	—	CCP3IF	—	—	—	—	100
PR2	Timer2 Period Register								210*
T2CON	—	T2OUTPS<3:0>				TMR2ON	T2CKPS<1:0>		212
TMR2	Timer2 Module Register								210
TRISA	TRISA7	TRISA6	TRISA5	TRISA4	TRISA3	TRISA2	TRISA1	TRISA0	131

Legend: — = Unimplemented location, read as '0'. Shaded cells are not used by the PWM.
* Page provides register information.

25.4 Register Definitions: CCP Control

REGISTER 25-1: CCPxCON: CCPx CONTROL REGISTER

U-0	U-0	R/W-0/0	R/W-0/0	R/W-0/0	R/W-0/0	R/W-0/0	R/W-0/0
—	—	DCxB<1:0>		CCPxM<3:0>			
bit 7							bit 0

Legend:		
R = Readable bit	W = Writable bit	U = Unimplemented bit, read as ‘0’
u = Bit is unchanged	x = Bit is unknown	-n/n = Value at POR and BOR/Value at all other Reset
‘1’ = Bit is set	‘0’ = Bit is cleared	

bit 7-6 **Unimplemented:** Read as ‘0’

bit 5-4 **DCxB<1:0>:** PWM Duty Cycle Least Significant bits

Capture mode:
Unused

Compare mode:
Unused

PWM mode:
These bits are the two LSbs of the PWM duty cycle. The eight MSbs are found in CCPRxL.

bit 3-0 **CCPxM<3:0>:** CCPx Mode Select bits

11xx = PWM mode

1011 = Compare mode: Auto-conversion Trigger (sets CCPxIF bit (CCP2), starts ADC conversion if ADC module is enabled)(1)
1010 = Compare mode: generate software interrupt only
1001 = Compare mode: clear output on compare match (set CCPxIF)
1000 = Compare mode: set output on compare match (set CCPxIF)

0111 = Capture mode: every 16th rising edge
0110 = Capture mode: every 4th rising edge
0101 = Capture mode: every rising edge
0100 = Capture mode: every falling edge

0011 = Reserved
0010 = Compare mode: toggle output on match
0001 = Reserved
0000 = Capture/Compare/PWM off (resets CCPx module)

© 2012-2014 Microchip Technology Inc.

26.0 MASTER SYNCHRONOUS SERIAL PORT (MSSP) MODULE

26.1 Master SSP (MSSP) Module Overview

The Master Synchronous Serial Port (MSSP) module is a serial interface useful for communicating with other peripheral or microcontroller devices. These peripheral devices may be serial EEPROMs, shift registers, display drivers, A/D converters, etc. The MSSP module can operate in one of two modes:

- Serial Peripheral Interface (SPI)
- Inter-Integrated Circuit (I^2C™)

The SPI interface supports the following modes and features:

- Master mode
- Slave mode
- Clock Parity
- Slave Select Synchronization (Slave mode only)
- Daisy-chain connection of slave devices

Figure 26-1 is a block diagram of the SPI interface module.

FIGURE 26-1: MSSP BLOCK DIAGRAM (SPI MODE)

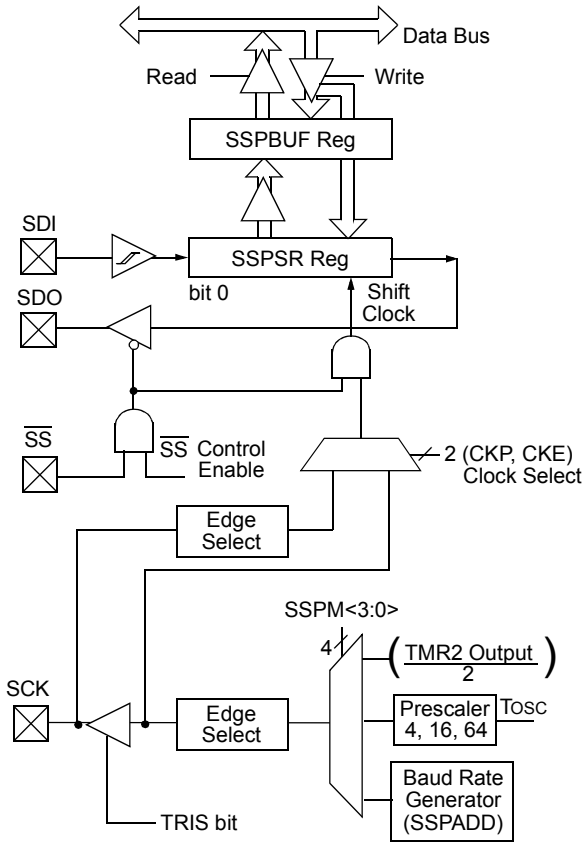

The I²C interface supports the following modes and features:

- Master mode
- Slave mode
- Byte NACKing (Slave mode)
- Limited multi-master support
- 7-bit and 10-bit addressing
- Start and Stop interrupts
- Interrupt masking
- Clock stretching
- Bus collision detection
- General call address matching
- Address masking
- Address Hold and Data Hold modes
- Selectable SDA hold times

Figure 26-2 is a block diagram of the I²C interface module in Master mode. Figure 26-3 is a diagram of the I²C interface module in Slave mode.

FIGURE 26-2: MSSP BLOCK DIAGRAM (I²C™ MASTER MODE)

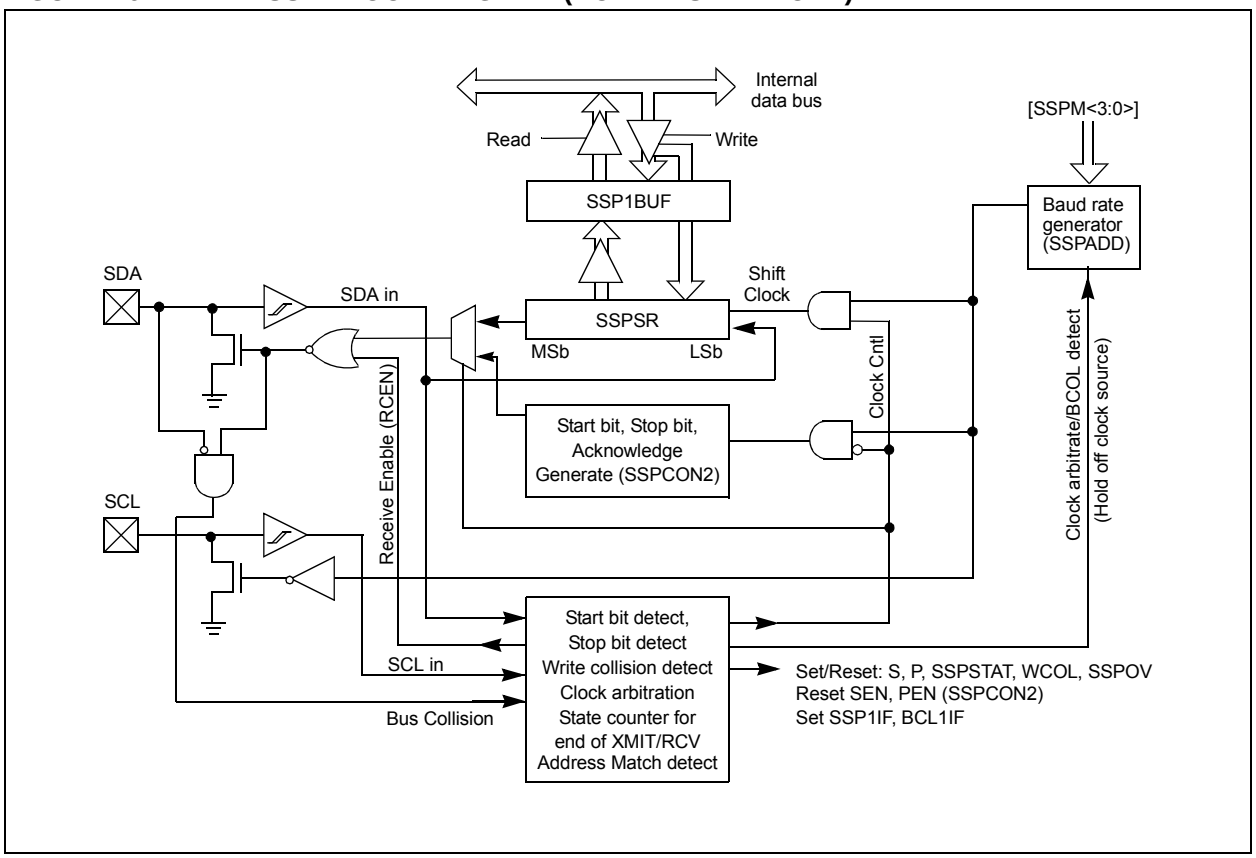

© 2012-2014 Microchip Technology Inc.

FIGURE 26-3: MSSP BLOCK DIAGRAM (I^2C™ SLAVE MODE)

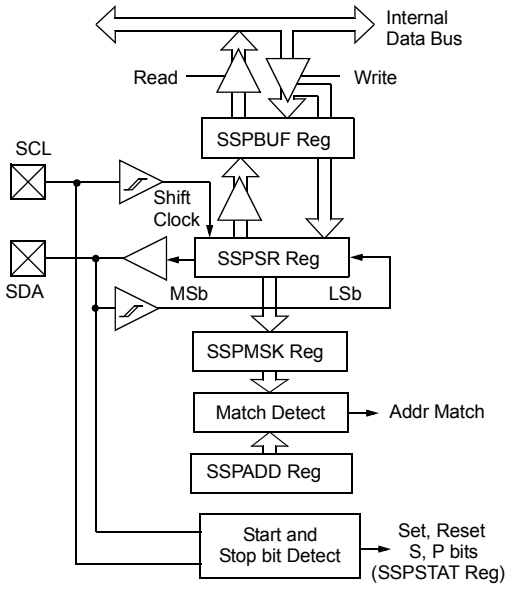

26.2 SPI Mode Overview

The Serial Peripheral Interface (SPI) bus is a synchronous serial data communication bus that operates in Full-Duplex mode. Devices communicate in a master/slave environment where the master device initiates the communication. A slave device is controlled through a Chip Select known as Slave Select.

The SPI bus specifies four signal connections:

- Serial Clock (SCK)
- Serial Data Out (SDO)
- Serial Data In (SDI)
- Slave Select ($\overline{SS}$)

Figure 26-1 shows the block diagram of the MSSP module when operating in SPI mode.

The SPI bus operates with a single master device and one or more slave devices. When multiple slave devices are used, an independent Slave Select connection is required from the master device to each slave device.

Figure 26-4 shows a typical connection between a master device and multiple slave devices.

The master selects only one slave at a time. Most slave devices have tri-state outputs so their output signal appears disconnected from the bus when they are not selected.

Transmissions involve two shift registers, 8 bits in size, one in the master and one in the slave. With either the master or the slave device, data is always shifted out one bit at a time, with the Most Significant bit (MSb) shifted out first. At the same time, a new Least Significant bit (LSb) is shifted into the same register.

Figure 26-5 shows a typical connection between two processors configured as master and slave devices.

Data is shifted out of both shift registers on the programmed clock edge and latched on the opposite edge of the clock.

The master device transmits information out on its SDO output pin which is connected to, and received by, the slave's SDI input pin. The slave device transmits information out on its SDO output pin, which is connected to, and received by, the master's SDI input pin.

To begin communication, the master device first sends out the clock signal. Both the master and the slave devices should be configured for the same clock polarity.

The master device starts a transmission by sending out the MSb from its shift register. The slave device reads this bit from that same line and saves it into the LSb position of its shift register.

During each SPI clock cycle, a full-duplex data transmission occurs. This means that while the master device is sending out the MSb from its shift register (on its SDO pin) and the slave device is reading this bit and saving it as the LSb of its shift register, that the slave device is also sending out the MSb from its shift register (on its SDO pin) and the master device is reading this bit and saving it as the LSb of its shift register.

After 8 bits have been shifted out, the master and slave have exchanged register values.

If there is more data to exchange, the shift registers are loaded with new data and the process repeats itself.

Whether the data is meaningful or not (dummy data), depends on the application software. This leads to three scenarios for data transmission:

- Master sends useful data and slave sends dummy data.
- Master sends useful data and slave sends useful data.
- Master sends dummy data and slave sends useful data.

Transmissions may involve any number of clock cycles. When there is no more data to be transmitted, the master stops sending the clock signal and it deselects the slave.

Every slave device connected to the bus that has not been selected through its slave select line must disregard the clock and transmission signals and must not transmit out any data of its own.

© 2012-2014 Microchip Technology Inc.

FIGURE 26-4: SPI MASTER AND MULTIPLE SLAVE CONNECTION

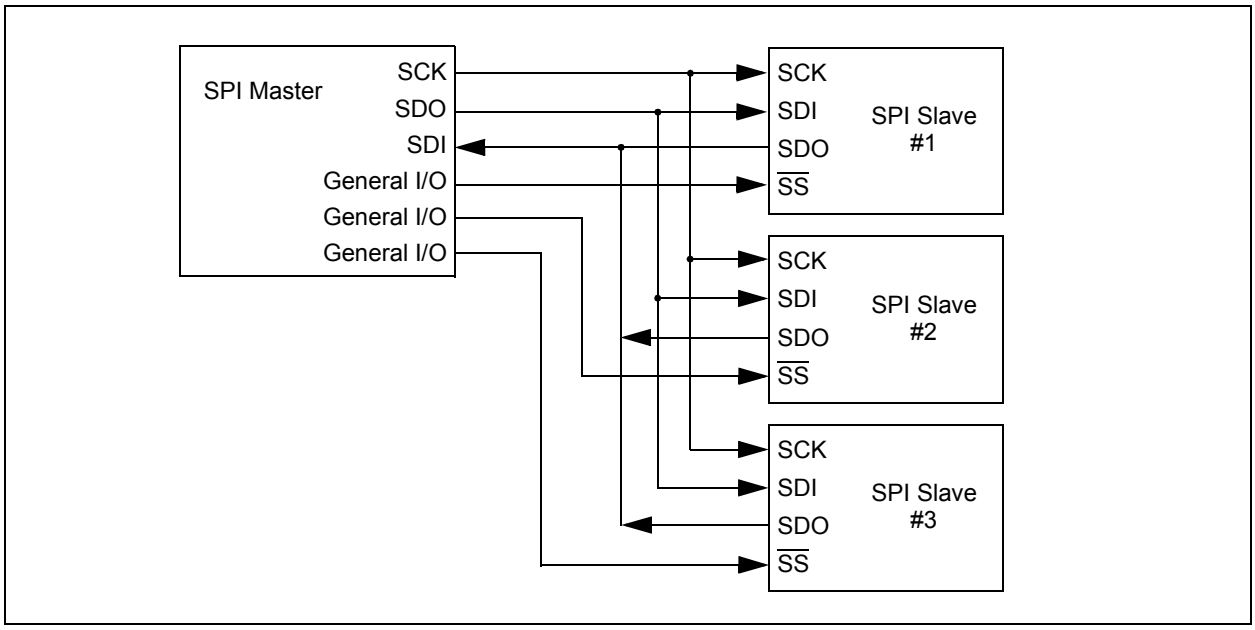

26.2.1 SPI MODE REGISTERS

The MSSP module has five registers for SPI mode operation. These are:

- MSSP STATUS register (SSPSTAT)
- MSSP Control register 1 (SSPCON1)
- MSSP Control register 3 (SSPCON3)
- MSSP Data Buffer register (SSPBUF)
- MSSP Address register (SSPADD)
- MSSP Shift register (SSPSR)
  (Not directly accessible)

SSPCON1 and SSPSTAT are the control and STATUS registers in SPI mode operation. The SSPCON1 register is readable and writable. The lower 6 bits of the SSPSTAT are read-only. The upper 2 bits of the SSPSTAT are read/write.

In one SPI master mode, SSPADD can be loaded with a value used in the Baud Rate Generator. More information on the Baud Rate Generator is available in **Section 26.7 “Baud Rate Generator”**.

SSPSR is the shift register used for shifting data in and out. SSPBUF provides indirect access to the SSPSR register. SSPBUF is the buffer register to which data bytes are written, and from which data bytes are read.

In receive operations, SSPSR and SSPBUF together create a buffered receiver. When SSPSR receives a complete byte, it is transferred to SSPBUF and the SSP1IF interrupt is set.

During transmission, the SSPBUF is not buffered. A write to SSPBUF will write to both SSPBUF and SSPSR.

26.2.2 SPI MODE OPERATION

When initializing the SPI, several options need to be specified. This is done by programming the appropriate control bits (SSPCON1<5:0> and SSPSTAT<7:6>). These control bits allow the following to be specified:

- Master mode (SCK is the clock output)
- Slave mode (SCK is the clock input)
- Clock Polarity (Idle state of SCK)
- Data Input Sample Phase (middle or end of data output time)
- Clock Edge (output data on rising/falling edge of SCK)
- Clock Rate (Master mode only)
- Slave Select mode (Slave mode only)

To enable the serial port, SSP Enable bit, SSPEN of the SSPCON1 register, must be set. To reset or reconfigure SPI mode, clear the SSPEN bit, re-initialize the SSPCONx registers and then set the SSPEN bit. This configures the SDI, SDO, SCK and $\overline{SS}$ pins as serial port pins. For the pins to behave as the serial port function, some must have their data direction bits (in the TRIS register) appropriately programmed as follows:

- SDI must have corresponding TRIS bit set
- SDO must have corresponding TRIS bit cleared
- SCK (Master mode) must have corresponding TRIS bit cleared
- SCK (Slave mode) must have corresponding TRIS bit set
- $\overline{SS}$ must have corresponding TRIS bit set

Any serial port function that is not desired may be overridden by programming the corresponding data direction (TRIS) register to the opposite value.

The MSSP consists of a transmit/receive shift register (SSPSR) and a buffer register (SSPBUF). The SSPSR shifts the data in and out of the device, MSb first. The SSPBUF holds the data that was written to the SSPSR until the received data is ready. Once the 8 bits of data have been received, that byte is moved to the SSPBUF register. Then, the Buffer Full Detect bit, BF of the SSPSTAT register, and the interrupt flag bit, SSP1IF, are set. This double-buffering of the received data (SSPBUF) allows the next byte to start reception before reading the data that was just received. Any write to the SSPBUF register during transmission/reception of data will be ignored and the write collision detect bit WCOL of the SSPCON1 register, will be set. User software must clear the WCOL bit to allow the following write(s) to the SSPBUF register to complete successfully.

When the application software is expecting to receive valid data, the SSPBUF should be read before the next byte of data to transfer is written to the SSPBUF. The Buffer Full bit, BF of the SSPSTAT register, indicates when SSPBUF has been loaded with the received data (transmission is complete). When the SSPBUF is read, the BF bit is cleared. This data may be irrelevant if the SPI is only a transmitter. Generally, the MSSP interrupt is used to determine when the transmission/reception has completed. If the interrupt method is not going to be used, then software polling can be done to ensure that a write collision does not occur.

The SSPSR is not directly readable or writable and can

FIGURE 26-5: SPI MASTER/SLAVE CONNECTION

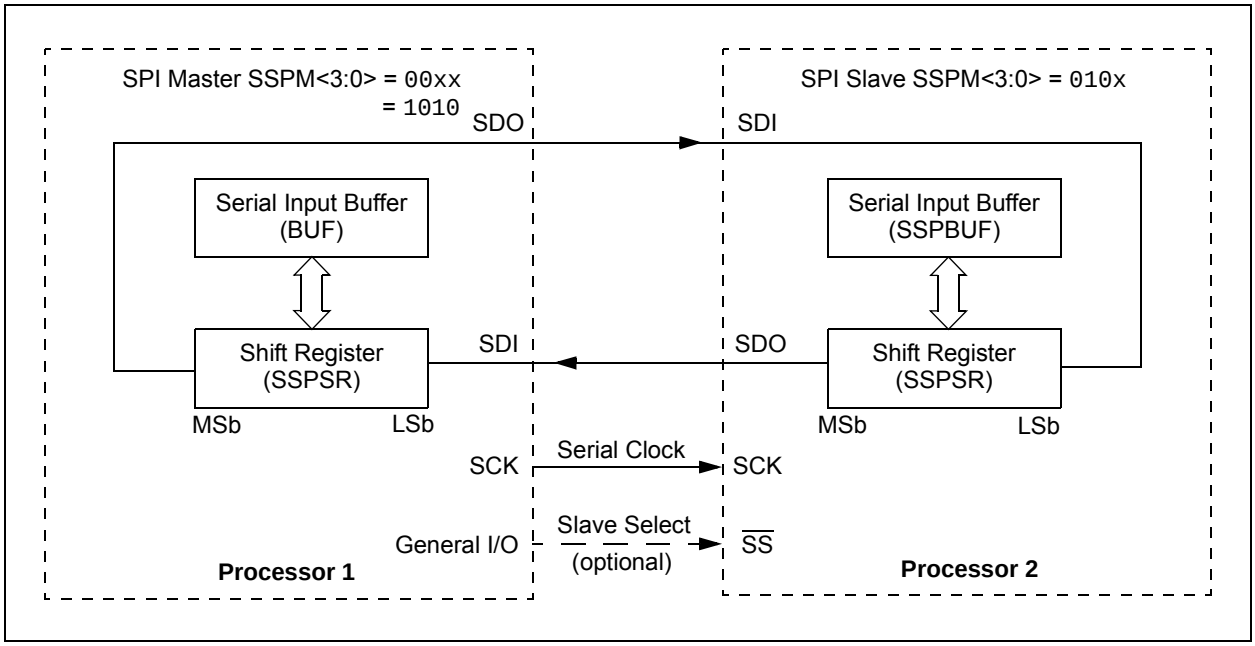

© 2012-2014 Microchip Technology Inc.

26.2.3 SPI MASTER MODE

The master can initiate the data transfer at any time because it controls the SCK line. The master determines when the slave (Processor 2, Figure 26-5) is to broadcast data by the software protocol.

In Master mode, the data is transmitted/received as soon as the SSPBUF register is written to. If the SPI is only going to receive, the SDO output could be disabled (programmed as an input). The SSPSR register will continue to shift in the signal present on the SDI pin at the programmed clock rate. As each byte is received, it will be loaded into the SSPBUF register as if a normal received byte (interrupts and Status bits appropriately set).

The clock polarity is selected by appropriately programming the CKP bit of the SSPCON1 register and the CKE bit of the SSPSTAT register. This then, would give waveforms for SPI communication as shown in Figure 26-6, Figure 26-8 and Figure 26-9, where the MSB is transmitted first. In Master mode, the SPI clock rate (bit rate) is user programmable to be one of the following:

- FOSC/4 (or TCY)
- FOSC/16 (or 4 * TCY)
- FOSC/64 (or 16 * TCY)
- Timer2 output/2
- Fosc/(4 * (SSPADD + 1))

Figure 26-6 shows the waveforms for Master mode.

When the CKE bit is set, the SDO data is valid before there is a clock edge on SCK. The change of the input sample is shown based on the state of the SMP bit. The time when the SSPBUF is loaded with the received data is shown.

FIGURE 26-6: SPI MODE WAVEFORM (MASTER MODE)

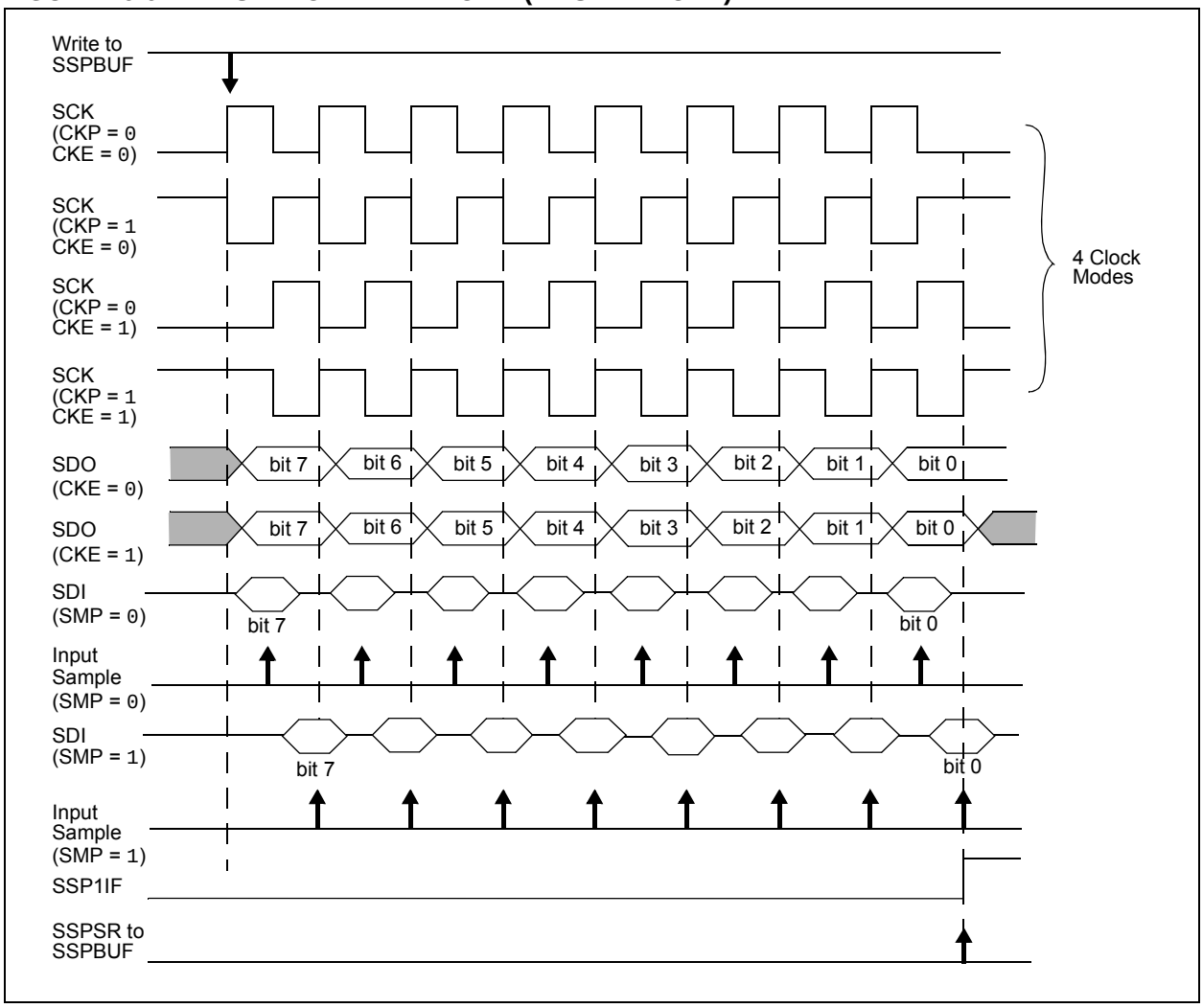

26.2.4 SPI SLAVE MODE

In Slave mode, the data is transmitted and received as external clock pulses appear on SCK. When the last bit is latched, the SSP1IF interrupt flag bit is set.

Before enabling the module in SPI Slave mode, the clock line must match the proper Idle state. The clock line can be observed by reading the SCK pin. The Idle state is determined by the CKP bit of the SSPCON1 register.

While in Slave mode, the external clock is supplied by the external clock source on the SCK pin. This external clock must meet the minimum high and low times as specified in the electrical specifications.

While in Sleep mode, the slave can transmit/receive data. The shift register is clocked from the SCK pin input and when a byte is received, the device will generate an interrupt. If enabled, the device will wake-up from Sleep.

26.2.4.1 Daisy-Chain Configuration

The SPI bus can sometimes be connected in a daisy-chain configuration. The first slave output is connected to the second slave input, the second slave output is connected to the third slave input, and so on. The final slave output is connected to the master input. Each slave sends out, during a second group of clock pulses, an exact copy of what was received during the first group of clock pulses. The whole chain acts as one large communication shift register. The daisy-chain feature only requires a single Slave Select line from the master device.

Figure 26-7 shows the block diagram of a typical daisy-chain connection when operating in SPI mode.

In a daisy-chain configuration, only the most recent byte on the bus is required by the slave. Setting the BOEN bit of the SSPCON3 register will enable writes to the SSPBUF register, even if the previous byte has not been read. This allows the software to ignore data that may not apply to it.

26.2.5 SLAVE SELECT SYNCHRONIZATION

The Slave Select can also be used to synchronize communication. The Slave Select line is held high until the master device is ready to communicate. When the Slave Select line is pulled low, the slave knows that a new transmission is starting.

If the slave fails to receive the communication properly, it will be reset at the end of the transmission, when the Slave Select line returns to a high state. The slave is then ready to receive a new transmission when the Slave Select line is pulled low again. If the Slave Select line is not used, there is a risk that the slave will eventually become out of sync with the master. If the slave misses a bit, it will always be one bit off in future transmissions. Use of the Slave Select line allows the slave and master to align themselves at the beginning of each transmission.

The $\overline{SS}$ pin allows a Synchronous Slave mode. The SPI must be in Slave mode with $\overline{SS}$ pin control enabled (SSPCON1<3:0> = `0100`).

When the $\overline{SS}$ pin is low, transmission and reception are enabled and the SDO pin is driven.

When the $\overline{SS}$ pin goes high, the SDO pin is no longer driven, even if in the middle of a transmitted byte and becomes a floating output. External pull-up/pull-down resistors may be desirable depending on the application.

> **Note 1:** When the SPI is in Slave mode with $\overline{SS}$ pin control enabled (SSPCON1<3:0> = `0100`), the SPI module will reset if the $\overline{SS}$ pin is set to VDD.
>
> **2:** When the SPI is used in Slave mode with CKE set; the user must enable $\overline{SS}$ pin control.
>
> **3:** While operated in SPI Slave mode the SMP bit of the SSPSTAT register must remain clear.

When the SPI module resets, the bit counter is forced to ‘`0`’. This can be done by either forcing the $\overline{SS}$ pin to a high level or clearing the SSPEN bit.

© 2012-2014 Microchip Technology Inc.

FIGURE 26-7: SPI DAISY-CHAIN CONNECTION

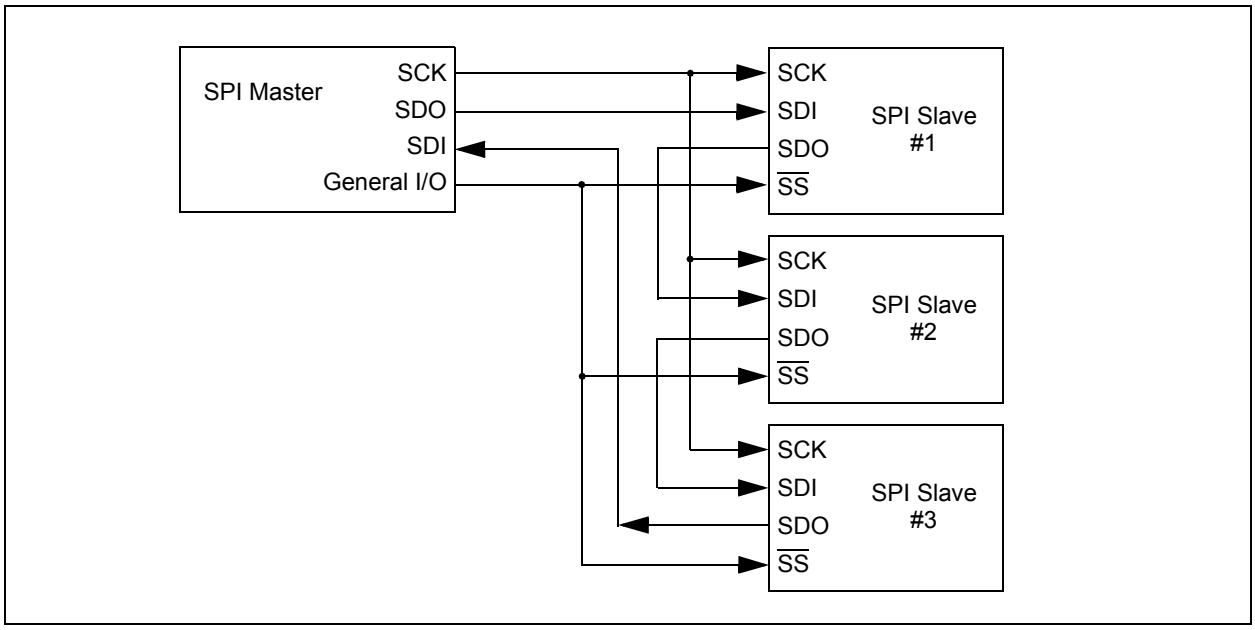

FIGURE 26-8: SLAVE SELECT SYNCHRONOUS WAVEFORM

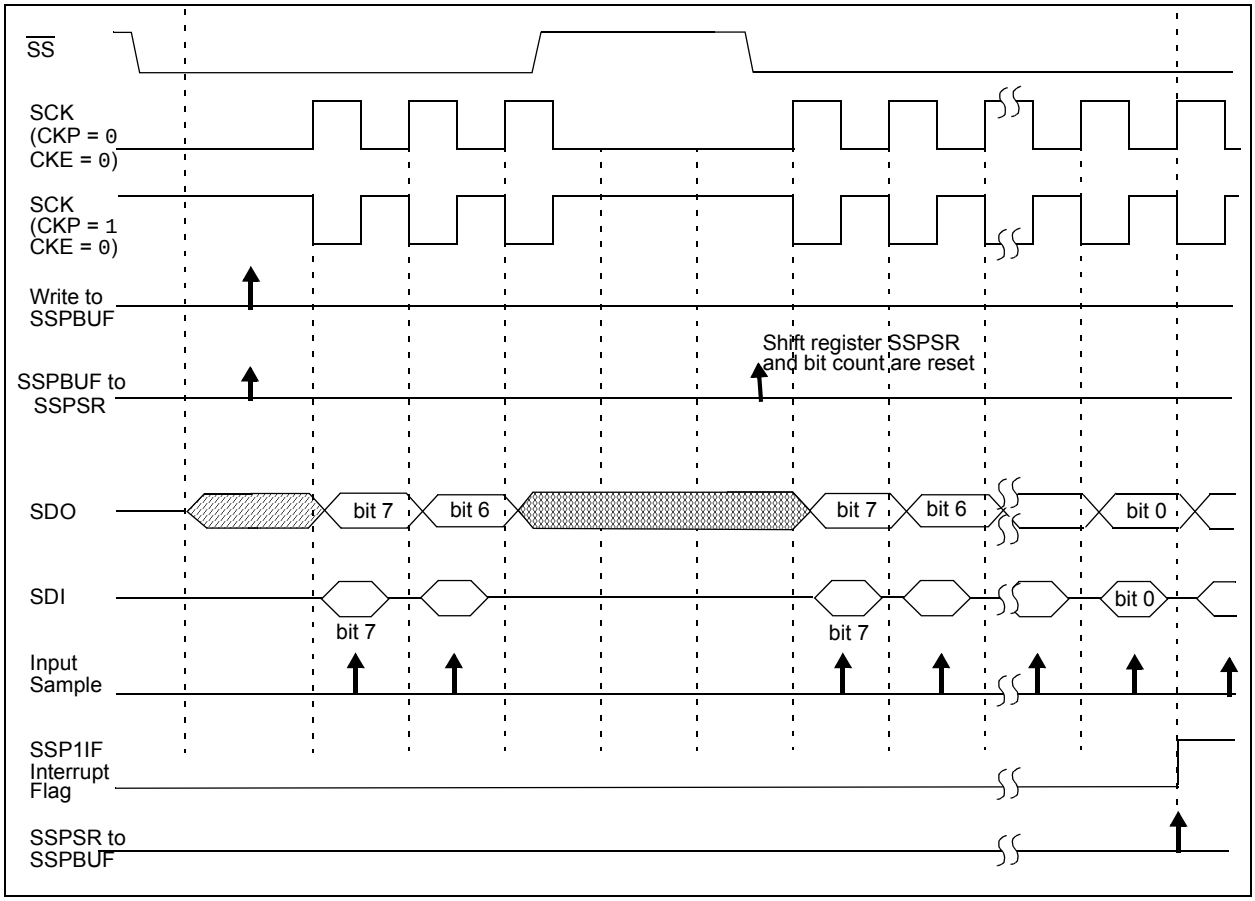

FIGURE 26-9: SPI MODE WAVEFORM (SLAVE MODE WITH CKE = 0)

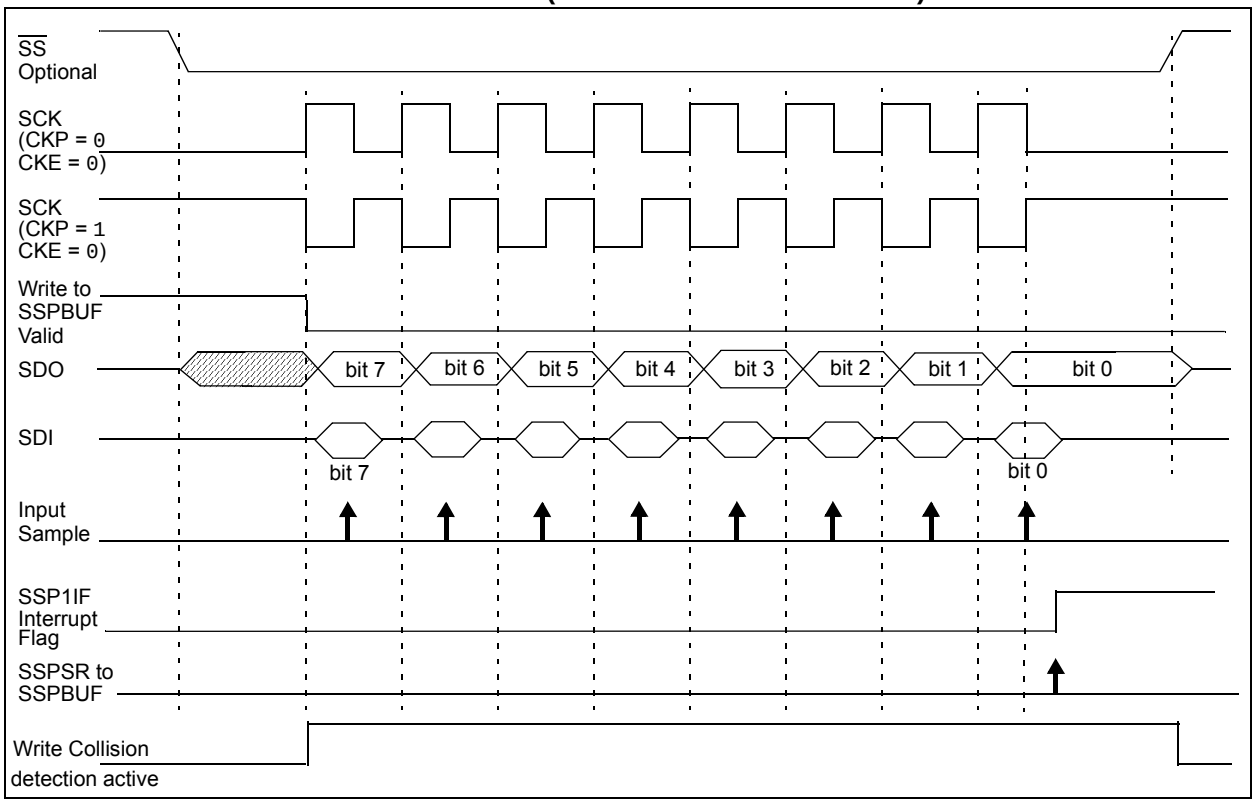

FIGURE 26-10: SPI MODE WAVEFORM (SLAVE MODE WITH CKE = 1)

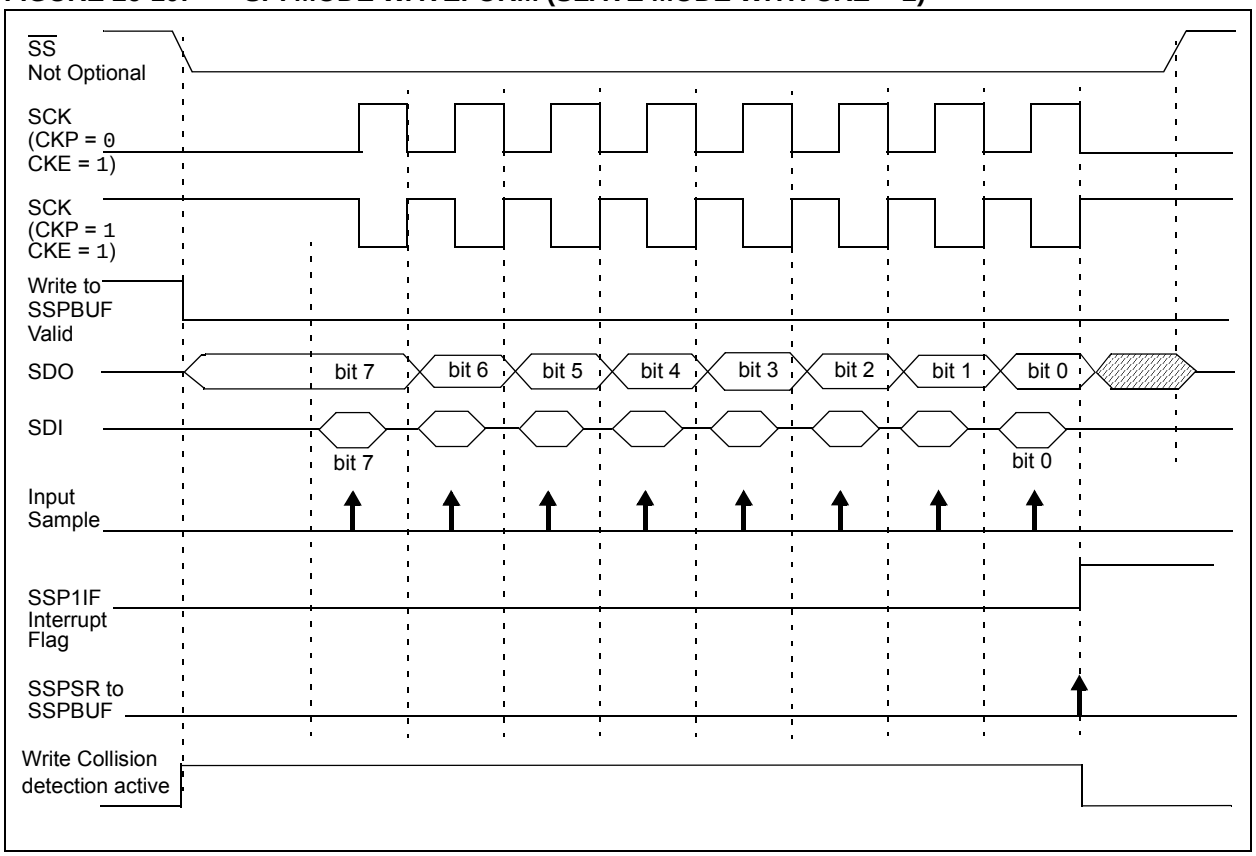

© 2012-2014 Microchip Technology Inc.

26.2.6 SPI OPERATION IN SLEEP MODE

In SPI Master mode, module clocks may be operating at a different speed than when in Full-Power mode; in the case of the Sleep mode, all clocks are halted.

Special care must be taken by the user when the MSSP clock is much faster than the system clock.

In Slave mode, when MSSP interrupts are enabled, after the master completes sending data, an MSSP interrupt will wake the controller from Sleep.

If an exit from Sleep mode is not desired, MSSP interrupts should be disabled.

In SPI Master mode, when the Sleep mode is selected, all module clocks are halted and the transmission/reception will remain in that state until the device wakes. After the device returns to Run mode, the module will resume transmitting and receiving data.

In SPI Slave mode, the SPI Transmit/Receive Shift register operates asynchronously to the device. This allows the device to be placed in Sleep mode and data to be shifted into the SPI Transmit/Receive Shift register. When all 8 bits have been received, the MSSP interrupt flag bit will be set and if enabled, will wake the device.

TABLE 26-1: SUMMARY OF REGISTERS ASSOCIATED WITH SPI OPERATION

Name	Bit 7	Bit 6	Bit 5	Bit 4	Bit 3	Bit 2	Bit 1	Bit 0	Register on Page
ANSELA	ANSA7	—	ANSA5	ANSA4	ANSA3	ANSA2	ANSA1	ANSA0	132
APFCON1	C2OUTSEL	CCP1SEL	SDOSEL	SCKSEL	SDISEL	TXSEL	RXSEL	CCP2SEL	127
INTCON	GIE	PEIE	TMR0IE	INTE	IOCIE	TMR0IF	INTF	IOCIF	93
PIE1	TMR1GIE	ADIE	RCIE	TXIE	SSP1IE	CCP1IE	TMR2IE	TMR1IE	94
PIR1	TMR1GIF	ADIF	RCIF	TXIF	SSP1IF	CCP1IF	TMR2IF	TMR1IF	98
SSP1BUF	Synchronous Serial Port Receive Buffer/Transmit Register								285*
SSP1CON1	WCOL	SSPOV	SSPEN	CKP	SSPM<3:0>				331
SSP1CON3	ACKTIM	PCIE	SCIE	BOEN	SDAHT	SBCDE	AHEN	DHEN	333
SSP1STAT	SMP	CKE	D/$\overline{A}$	P	S	R/$\overline{W}$	UA	BF	329
TRISA	TRISA7	TRISA6	TRISA5	TRISA4	TRISA3	TRISA2	TRISA1	TRISA0	131
TRISC	TRISC7	TRISC6	TRISC5	TRISC4	TRISC3	TRISC2	TRISC1	TRISA0	142

Legend: — = Unimplemented location, read as '0'. Shaded cells are not used by the MSSP in SPI mode.
* Page provides register information.
Note 1: PIC16(L)F1784/7 only.

26.3 I²C MODE OVERVIEW

The Inter-Integrated Circuit Bus (I²C) is a multi-master serial data communication bus. Devices communicate in a master/slave environment where the master devices initiate the communication. A Slave device is controlled through addressing.

The I²C bus specifies two signal connections:

- Serial Clock (SCL)
- Serial Data (SDA)

Figure 26-11 shows the block diagram of the MSSP module when operating in I²C mode.

Both the SCL and SDA connections are bidirectional open-drain lines, each requiring pull-up resistors for the supply voltage. Pulling the line to ground is considered a logical zero and letting the line float is considered a logical one.

Figure 26-11 shows a typical connection between two processors configured as master and slave devices.

The I²C bus can operate with one or more master devices and one or more slave devices.

There are four potential modes of operation for a given device:

- Master Transmit mode
  (master is transmitting data to a slave)
- Master Receive mode
  (master is receiving data from a slave)
- Slave Transmit mode
  (slave is transmitting data to a master)
- Slave Receive mode
  (slave is receiving data from the master)

To begin communication, a master device starts out in Master Transmit mode. The master device sends out a Start bit followed by the address byte of the slave it intends to communicate with. This is followed by a single Read/Write bit, which determines whether the master intends to transmit to or receive data from the slave device.

If the requested slave exists on the bus, it will respond with an Acknowledge bit, otherwise known as an $\overline{\text{ACK}}$. The master then continues in either Transmit mode or Receive mode and the slave continues in the complement, either in Receive mode or Transmit mode, respectively.

A Start bit is indicated by a high-to-low transition of the SDA line while the SCL line is held high. Address and data bytes are sent out, Most Significant bit (MSb) first. The Read/Write bit is sent out as a logical one when the master intends to read data from the slave, and is sent out as a logical zero when it intends to write data to the slave.

FIGURE 26-11: I²C MASTER/ SLAVE CONNECTION

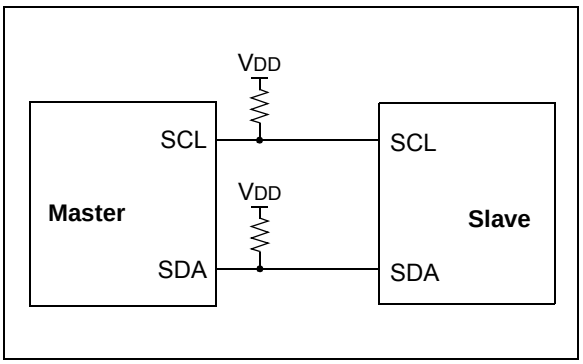

The Acknowledge bit ($\overline{\text{ACK}}$) is an active-low signal, which holds the SDA line low to indicate to the transmitter that the slave device has received the transmitted data and is ready to receive more.

The transition of a data bit is always performed while the SCL line is held low. Transitions that occur while the SCL line is held high are used to indicate Start and Stop bits.

If the master intends to write to the slave, then it repeatedly sends out a byte of data, with the slave responding after each byte with an $\overline{\text{ACK}}$ bit. In this example, the master device is in Master Transmit mode and the slave is in Slave Receive mode.

If the master intends to read from the slave, then it repeatedly receives a byte of data from the slave, and responds after each byte with an $\overline{\text{ACK}}$ bit. In this example, the master device is in Master Receive mode and the slave is Slave Transmit mode.

On the last byte of data communicated, the master device may end the transmission by sending a Stop bit. If the master device is in Receive mode, it sends the Stop bit in place of the last $\overline{\text{ACK}}$ bit. A Stop bit is indicated by a low-to-high transition of the SDA line while the SCL line is held high.

In some cases, the master may want to maintain control of the bus and re-initiate another transmission. If so, the master device may send another Start bit in place of the Stop bit or last $\overline{\text{ACK}}$ bit when it is in receive mode.

The I²C bus specifies three message protocols;

- Single message where a master writes data to a slave.
- Single message where a master reads data from a slave.
- Combined message where a master initiates a minimum of two writes, or two reads, or a combination of writes and reads, to one or more slaves.

© 2012-2014 Microchip Technology Inc.

When one device is transmitting a logical one, or letting the line float, and a second device is transmitting a logical zero, or holding the line low, the first device can detect that the line is not a logical one. This detection, when used on the SCL line, is called clock stretching. Clock stretching gives slave devices a mechanism to control the flow of data. When this detection is used on the SDA line, it is called arbitration. Arbitration ensures that there is only one master device communicating at any single time.

26.3.1 CLOCK STRETCHING

When a slave device has not completed processing data, it can delay the transfer of more data through the process of clock stretching. An addressed slave device may hold the SCL clock line low after receiving or sending a bit, indicating that it is not yet ready to continue. The master that is communicating with the slave will attempt to raise the SCL line in order to transfer the next bit, but will detect that the clock line has not yet been released. Because the SCL connection is open-drain, the slave has the ability to hold that line low until it is ready to continue communicating.

Clock stretching allows receivers that cannot keep up with a transmitter to control the flow of incoming data.

26.3.2 ARBITRATION

Each master device must monitor the bus for Start and Stop bits. If the device detects that the bus is busy, it cannot begin a new message until the bus returns to an Idle state.

However, two master devices may try to initiate a transmission on or about the same time. When this occurs, the process of arbitration begins. Each transmitter checks the level of the SDA data line and compares it to the level that it expects to find. The first transmitter to observe that the two levels do not match, loses arbitration, and must stop transmitting on the SDA line.

For example, if one transmitter holds the SDA line to a logical one (lets it float) and a second transmitter holds it to a logical zero (pulls it low), the result is that the SDA line will be low. The first transmitter then observes that the level of the line is different than expected and concludes that another transmitter is communicating.

The first transmitter to notice this difference is the one that loses arbitration and must stop driving the SDA line. If this transmitter is also a master device, it also must stop driving the SCL line. It then can monitor the lines for a Stop condition before trying to reissue its transmission. In the meantime, the other device that has not noticed any difference between the expected and actual levels on the SDA line continues with its original transmission. It can do so without any complications, because so far, the transmission appears exactly as expected with no other transmitter disturbing the message.

Slave Transmit mode can also be arbitrated, when a master addresses multiple slaves, but this is less common.

If two master devices are sending a message to two different slave devices at the address stage, the master sending the lower slave address always wins arbitration. When two master devices send messages to the same slave address, and addresses can sometimes refer to multiple slaves, the arbitration process must continue into the data stage.

Arbitration usually occurs very rarely, but it is a necessary process for proper multi-master support.

26.4 I²C MODE OPERATION

All MSSP I²C communication is byte oriented and shifted out MSb first. Six SFR registers and two interrupt flags interface the module with the PIC® microcontroller and user software. Two pins, SDA and SCL, are exercised by the module to communicate with other external I²C devices.

26.4.1 BYTE FORMAT

All communication in I²C is done in 9-bit segments. A byte is sent from a master to a slave or vice-versa, followed by an Acknowledge bit sent back. After the 8th falling edge of the SCL line, the device outputting data on the SDA changes that pin to an input and reads in an acknowledge value on the next clock pulse.

The clock signal, SCL, is provided by the master. Data is valid to change while the SCL signal is low, and sampled on the rising edge of the clock. Changes on the SDA line while the SCL line is high define special conditions on the bus, explained below.

26.4.2 DEFINITION OF I²C TERMINOLOGY

There is language and terminology in the description of I²C communication that have definitions specific to I²C. That word usage is defined below and may be used in the rest of this document without explanation. This table was adapted from the Philips I²C specification.

26.4.3 SDA AND SCL PINS

Selection of any I²C mode with the SSPEN bit set, forces the SCL and SDA pins to be open-drain. These pins should be set by the user to inputs by setting the appropriate TRIS bits.

> **Note:** Data is tied to output zero when an I²C mode is enabled.

26.4.4 SDA HOLD TIME

The hold time of the SDA pin is selected by the SDAHT bit of the SSPCON3 register. Hold time is the time SDA is held valid after the falling edge of SCL. Setting the SDAHT bit selects a longer 300 ns minimum hold time and may help on buses with large capacitance.

TABLE 26-2: I²C BUS TERMS

TERM	Description
Transmitter	The device which shifts data out onto the bus.
Receiver	The device which shifts data in from the bus.
Master	The device that initiates a transfer, generates clock signals and terminates a transfer.
Slave	The device addressed by the master.
Multi-master	A bus with more than one device that can initiate data transfers.
Arbitration	Procedure to ensure that only one master at a time controls the bus. Winning arbitration ensures that the message is not corrupted.
Synchronization	Procedure to synchronize the clocks of two or more devices on the bus.
Idle	No master is controlling the bus, and both SDA and SCL lines are high.
Active	Any time one or more master devices are controlling the bus.
Addressed Slave	Slave device that has received a matching address and is actively being clocked by a master.
Matching Address	Address byte that is clocked into a slave that matches the value stored in SSPADD.
Write Request	Slave receives a matching address with R/$\overline{W}$ bit clear, and is ready to clock in data.
Read Request	Master sends an address byte with the R/$\overline{W}$ bit set, indicating that it wishes to clock data out of the Slave. This data is the next and all following bytes until a Restart or Stop.
Clock Stretching	When a device on the bus hold SCL low to stall communication.
Bus Collision	Any time the SDA line is sampled low by the module while it is out-putting and expected high state.

© 2012-2014 Microchip Technology Inc.

26.4.5 START CONDITION

The I²C specification defines a Start condition as a transition of SDA from a high to a low state while SCL line is high. A Start condition is always generated by the master and signifies the transition of the bus from an Idle to an Active state. Figure 26-10 shows wave forms for Start and Stop conditions.

A bus collision can occur on a Start condition if the module samples the SDA line low before asserting it low. This does not conform to the I²C Specification that states no bus collision can occur on a Start.

26.4.6 STOP CONDITION

A Stop condition is a transition of the SDA line from low-to-high state while the SCL line is high.

> **Note:** At least one SCL low time must appear before a Stop is valid, therefore, if the SDA line goes low then high again while the SCL line stays high, only the Start condition is detected.

26.4.7 RESTART CONDITION

A Restart is valid any time that a Stop would be valid. A master can issue a Restart if it wishes to hold the bus after terminating the current transfer. A Restart has the same effect on the slave that a Start would, resetting all slave logic and preparing it to clock in an address. The master may want to address the same or another slave.

In 10-bit Addressing Slave mode a Restart is required for the master to clock data out of the addressed slave. Once a slave has been fully addressed, matching both high and low address bytes, the master can issue a Restart and the high address byte with the R/$\overline{W}$ bit set. The slave logic will then hold the clock and prepare to clock out data.

After a full match with R/$\overline{W}$ clear in 10-bit mode, a prior match flag is set and maintained. Until a Stop condition, a high address with R/$\overline{W}$ clear, or high address match fails.

26.4.8 START/STOP CONDITION INTERRUPT MASKING

The SCIE and PCIE bits of the SSPCON3 register can enable the generation of an interrupt in Slave modes that do not typically support this function. Slave modes where interrupt on Start and Stop detect are already enabled, these bits will have no effect.

FIGURE 26-12: I²C START AND STOP CONDITIONS

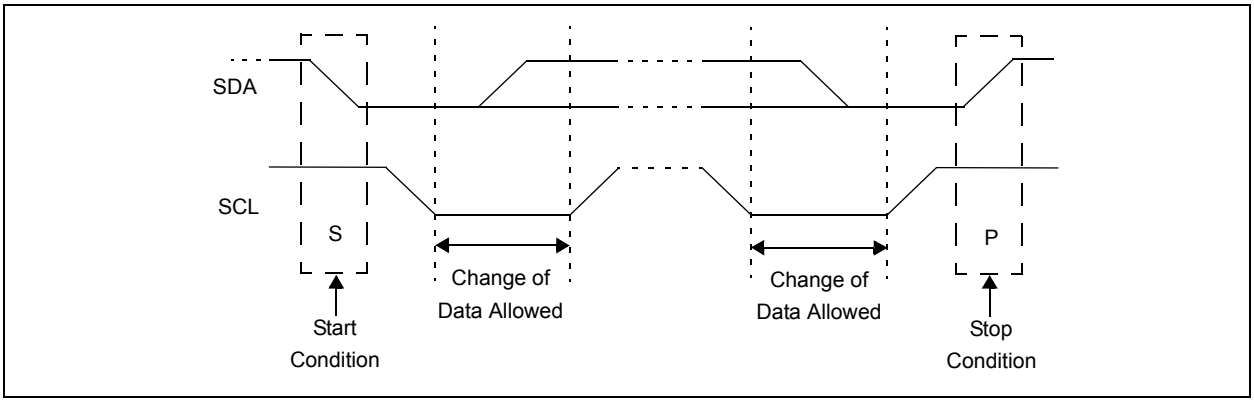

FIGURE 26-13: I²C RESTART CONDITION

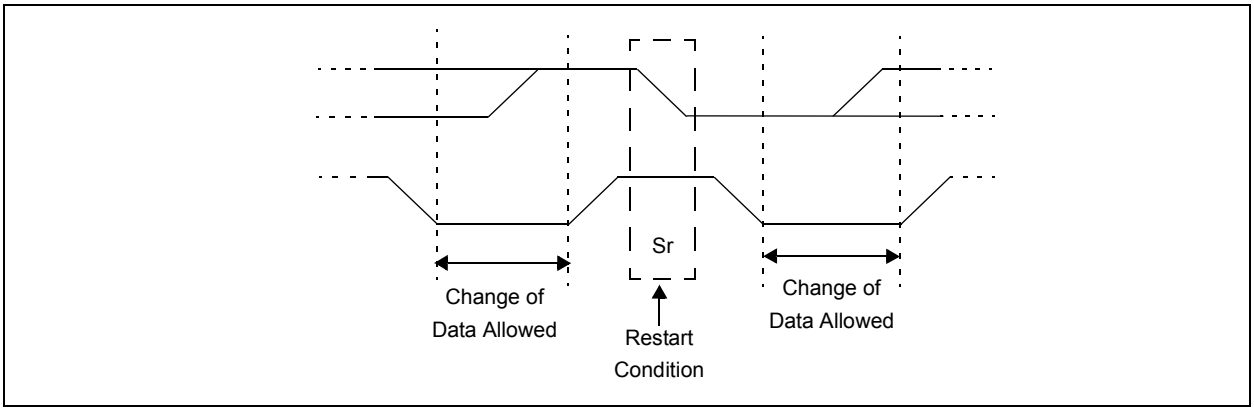

26.4.9 ACKNOWLEDGE SEQUENCE

The 9th SCL pulse for any transferred byte in I^{2}C is dedicated as an Acknowledge. It allows receiving devices to respond back to the transmitter by pulling the SDA line low. The transmitter must release control of the line during this time to shift in the response. The Acknowledge ($\overline{ACK}$) is an active-low signal, pulling the SDA line low indicated to the transmitter that the device has received the transmitted data and is ready to receive more.

The result of an $\overline{ACK}$ is placed in the ACKSTAT bit of the SSPCON2 register.

Slave software, when the AHEN and DHEN bits are set, allow the user to set the $\overline{ACK}$ value sent back to the transmitter. The ACKDT bit of the SSPCON2 register is set/cleared to determine the response.

Slave hardware will generate an $\overline{ACK}$ response if the AHEN and DHEN bits of the SSPCON3 register are clear.

There are certain conditions where an $\overline{ACK}$ will not be sent by the slave. If the BF bit of the SSPSTAT register or the SSPOV bit of the SSPCON1 register are set when a byte is received.

When the module is addressed, after the 8th falling edge of SCL on the bus, the ACKTIM bit of the SSPCON3 register is set. The ACKTIM bit indicates the acknowledge time of the active bus. The ACKTIM Status bit is only active when the AHEN bit or DHEN bit is enabled.

26.5 I^{2}C SLAVE MODE OPERATION

The MSSP Slave mode operates in one of four modes selected in the SSPM bits of SSPCON1 register. The modes can be divided into 7-bit and 10-bit Addressing mode. 10-bit Addressing modes operate the same as 7-bit with some additional overhead for handling the larger addresses.

Modes with Start and Stop bit interrupts operated the same as the other modes with SSP1IF additionally getting set upon detection of a Start, Restart, or Stop condition.

26.5.1 SLAVE MODE ADDRESSES

The SSPADD register (Register 26-6) contains the Slave mode address. The first byte received after a Start or Restart condition is compared against the value stored in this register. If the byte matches, the value is loaded into the SSPBUF register and an interrupt is generated. If the value does not match, the module goes idle and no indication is given to the software that anything happened.

The SSP Mask register (Register 26-5) affects the address matching process. See **Section 26.5.9 "SSP Mask Register"** for more information.

26.5.1.1 I^{2}C Slave 7-bit Addressing Mode

In 7-bit Addressing mode, the LSb of the received data byte is ignored when determining if there is an address match.

26.5.1.2 I^{2}C Slave 10-bit Addressing Mode

In 10-bit Addressing mode, the first received byte is compared to the binary value of '1 1 1 1 0 A9 A8 0'. A9 and A8 are the two MSb of the 10-bit address and stored in bits 2 and 1 of the SSPADD register.

After the acknowledge of the high byte the UA bit is set and SCL is held low until the user updates SSPADD with the low address. The low address byte is clocked in and all 8 bits are compared to the low address value in SSPADD. Even if there is not an address match; SSP1IF and UA are set, and SCL is held low until SSPADD is updated to receive a high byte again. When SSPADD is updated the UA bit is cleared. This ensures the module is ready to receive the high address byte on the next communication.

A high and low address match as a write request is required at the start of all 10-bit addressing communication. A transmission can be initiated by issuing a Restart once the slave is addressed, and clocking in the high address with the R/$\overline{W}$ bit set. The slave hardware will then acknowledge the read request and prepare to clock out data. This is only valid for a slave after it has received a complete high and low address byte match.

© 2012-2014 Microchip Technology Inc.

26.5.2 SLAVE RECEPTION

When the R/$\overline{W}$ bit of a matching received address byte is clear, the R/$\overline{W}$ bit of the SSPSTAT register is cleared. The received address is loaded into the SSPBUF register and acknowledged.

When the overflow condition exists for a received address, then not Acknowledge is given. An overflow condition is defined as either bit BF of the SSPSTAT register is set, or bit SSPOV of the SSPCON1 register is set. The BOEN bit of the SSPCON3 register modifies this operation. For more information see Register 26-4.

An MSSP interrupt is generated for each transferred data byte. Flag bit, SSP1IF, must be cleared by software.

When the SEN bit of the SSPCON2 register is set, SCL will be held low (clock stretch) following each received byte. The clock must be released by setting the CKP bit of the SSPCON1 register, except sometimes in 10-bit mode. See **Section 26.2.3 "SPI Master Mode"** for more detail.

26.5.2.1 7-bit Addressing Reception

This section describes a standard sequence of events for the MSSP module configured as an I^2C Slave in 7-bit Addressing mode. All decisions made by hardware or software and their effect on reception. Figure 26-13 and Figure 26-14 is used as a visual reference for this description.

This is a step by step process of what typically must be done to accomplish I^2C communication.

1. Start bit detected.
2. S bit of SSPSTAT is set; SSP1IF is set if interrupt on Start detect is enabled.
3. Matching address with R/$\overline{W}$ bit clear is received.
4. The slave pulls SDA low sending an $\overline{ACK}$ to the master, and sets SSP1IF bit.
5. Software clears the SSP1IF bit.
6. Software reads received address from SSPBUF clearing the BF flag.
7. If SEN = 1; Slave software sets CKP bit to release the SCL line.
8. The master clocks out a data byte.
9. Slave drives SDA low sending an $\overline{ACK}$ to the master, and sets SSP1IF bit.
10. Software clears SSP1IF.
11. Software reads the received byte from SSPBUF clearing BF.
12. Steps 8-12 are repeated for all received bytes from the master.
13. Master sends Stop condition, setting P bit of SSPSTAT, and the bus goes idle.

26.5.2.2 7-bit Reception with AHEN and DHEN

Slave device reception with AHEN and DHEN set operate the same as without these options with extra interrupts and clock stretching added after the 8th falling edge of SCL. These additional interrupts allow the slave software to decide whether it wants to $\overline{ACK}$ the receive address or data byte, rather than the hardware. This functionality adds support for PMBus™ that was not present on previous versions of this module.

This list describes the steps that need to be taken by slave software to use these options for I^2C communication. Figure 26-15 displays a module using both address and data holding. Figure 26-16 includes the operation with the SEN bit of the SSPCON2 register set.

1. S bit of SSPSTAT is set; SSP1IF is set if interrupt on Start detect is enabled.
2. Matching address with R/$\overline{W}$ bit clear is clocked in. SSP1IF is set and CKP cleared after the 8th falling edge of SCL.
3. Slave clears the SSP1IF.
4. Slave can look at the ACKTIM bit of the SSPCON3 register to determine if the SSP1IF was after or before the $\overline{ACK}$.
5. Slave reads the address value from SSPBUF, clearing the BF flag.
6. Slave sets $\overline{ACK}$ value clocked out to the master by setting ACKDT.
7. Slave releases the clock by setting CKP.
8. SSP1IF is set after an $\overline{ACK}$, not after a NACK.
9. If SEN = 1 the slave hardware will stretch the clock after the $\overline{ACK}$.
10. Slave clears SSP1IF.

Note: SSP1IF is still set after the 9th falling edge of SCL even if there is no clock stretching and BF has been cleared. Only if NACK is sent to master is SSP1IF not set

11. SSP1IF set and CKP cleared after 8th falling edge of SCL for a received data byte.
12. Slave looks at ACKTIM bit of SSPCON3 to determine the source of the interrupt.
13. Slave reads the received data from SSPBUF clearing BF.
14. Steps 7-14 are the same for each received data byte.
15. Communication is ended by either the slave sending an $\overline{ACK}$ = 1, or the master sending a Stop condition. If a Stop is sent and Interrupt on Stop Detect is disabled, the slave will only know by polling the P bit of the SSTSTAT register.

FIGURE 26-14: I²C SLAVE, 7-BIT ADDRESS, RECEPTION (SEN = 0, AHEN = 0, DHEN = 0)

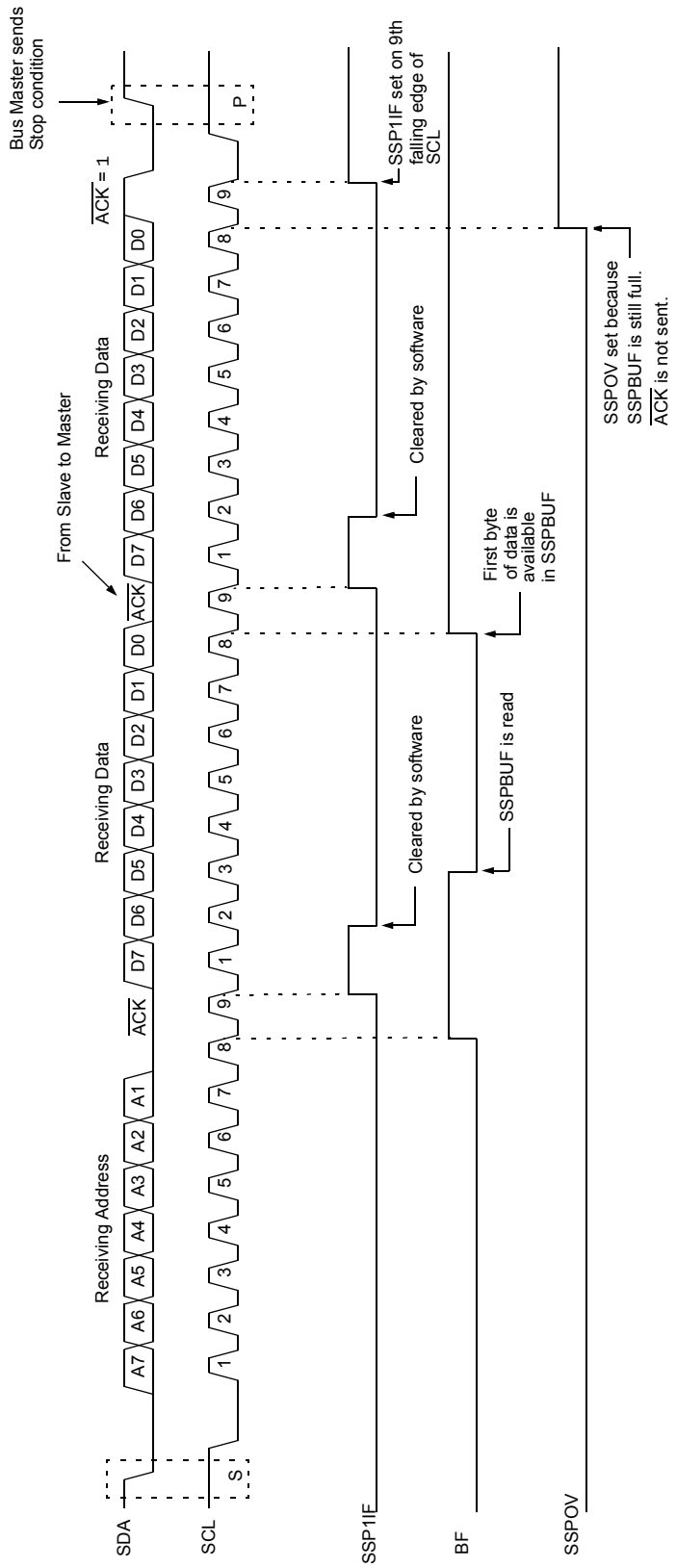

© 2012-2014 Microchip Technology Inc.

FIGURE 26-15: I²C SLAVE, 7-BIT ADDRESS, RECEPTION (SEN = 1, AHEN = 0, DHEN = 0)

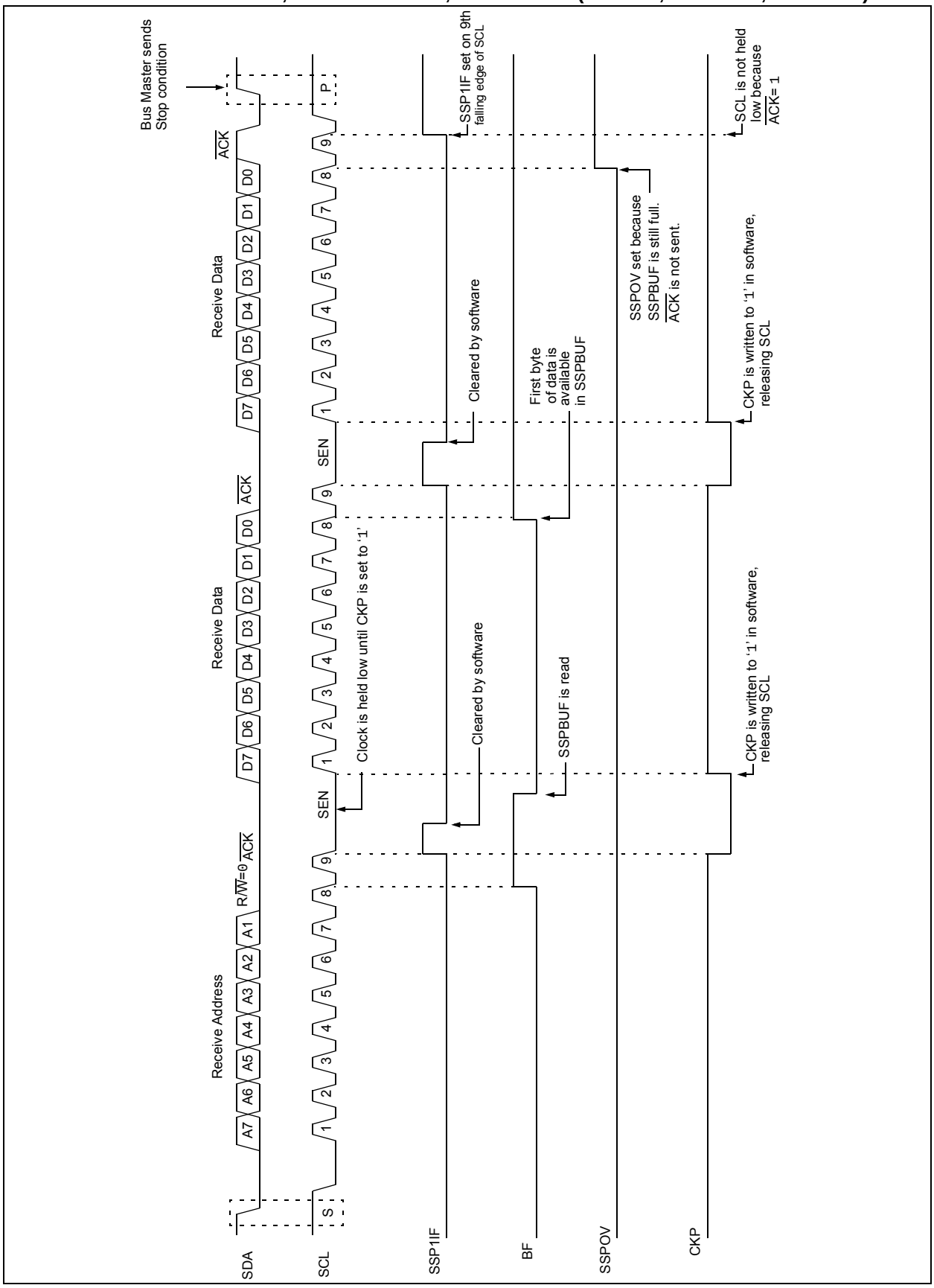

FIGURE 26-16: I²C SLAVE, 7-BIT ADDRESS, RECEPTION (SEN = 0, AHEN = 1, DHEN = 1)

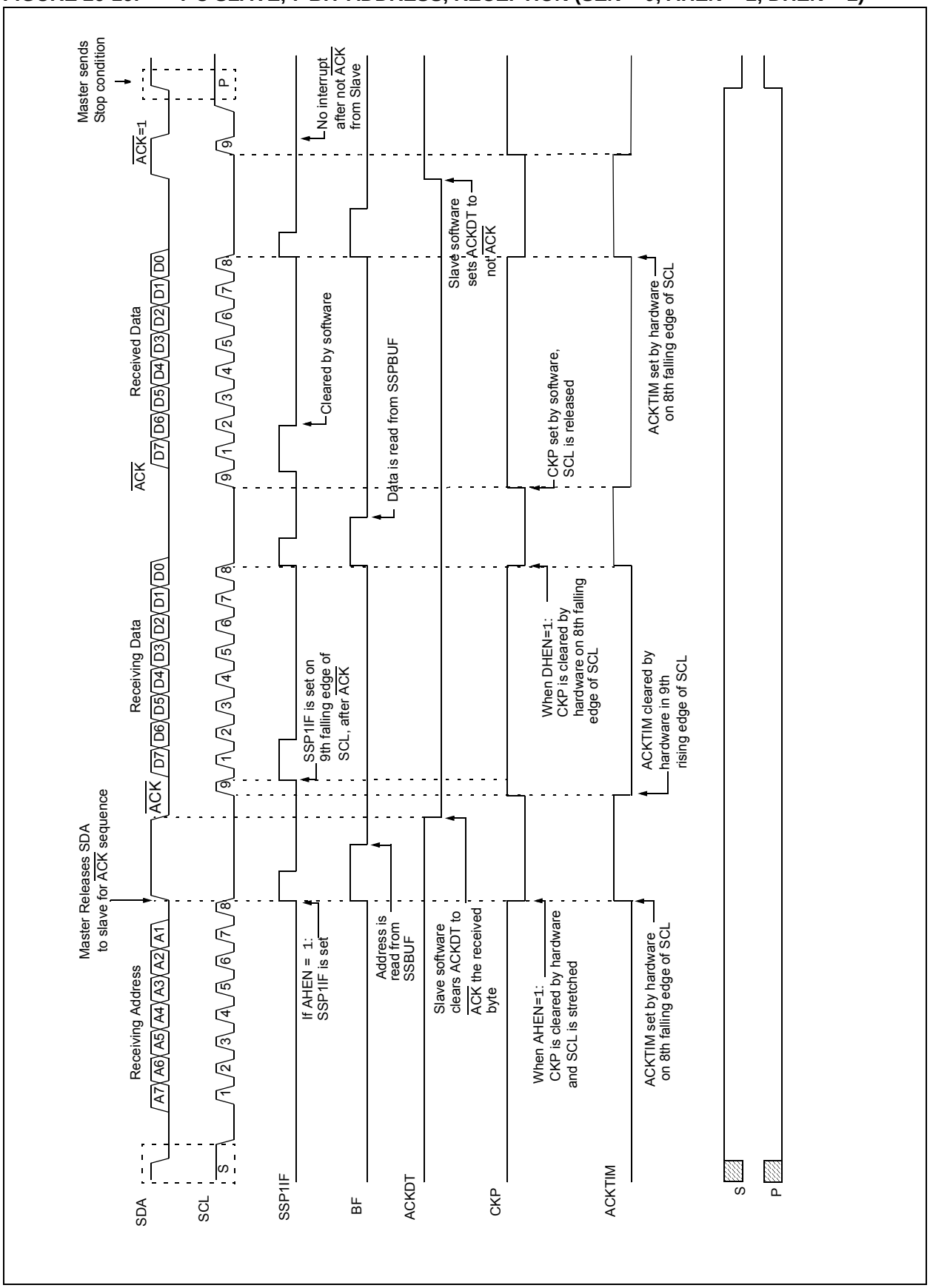

© 2012-2014 Microchip Technology Inc.

FIGURE 26-17: I²C SLAVE, 7-BIT ADDRESS, RECEPTION (SEN = 1, AHEN = 1, DHEN = 1)

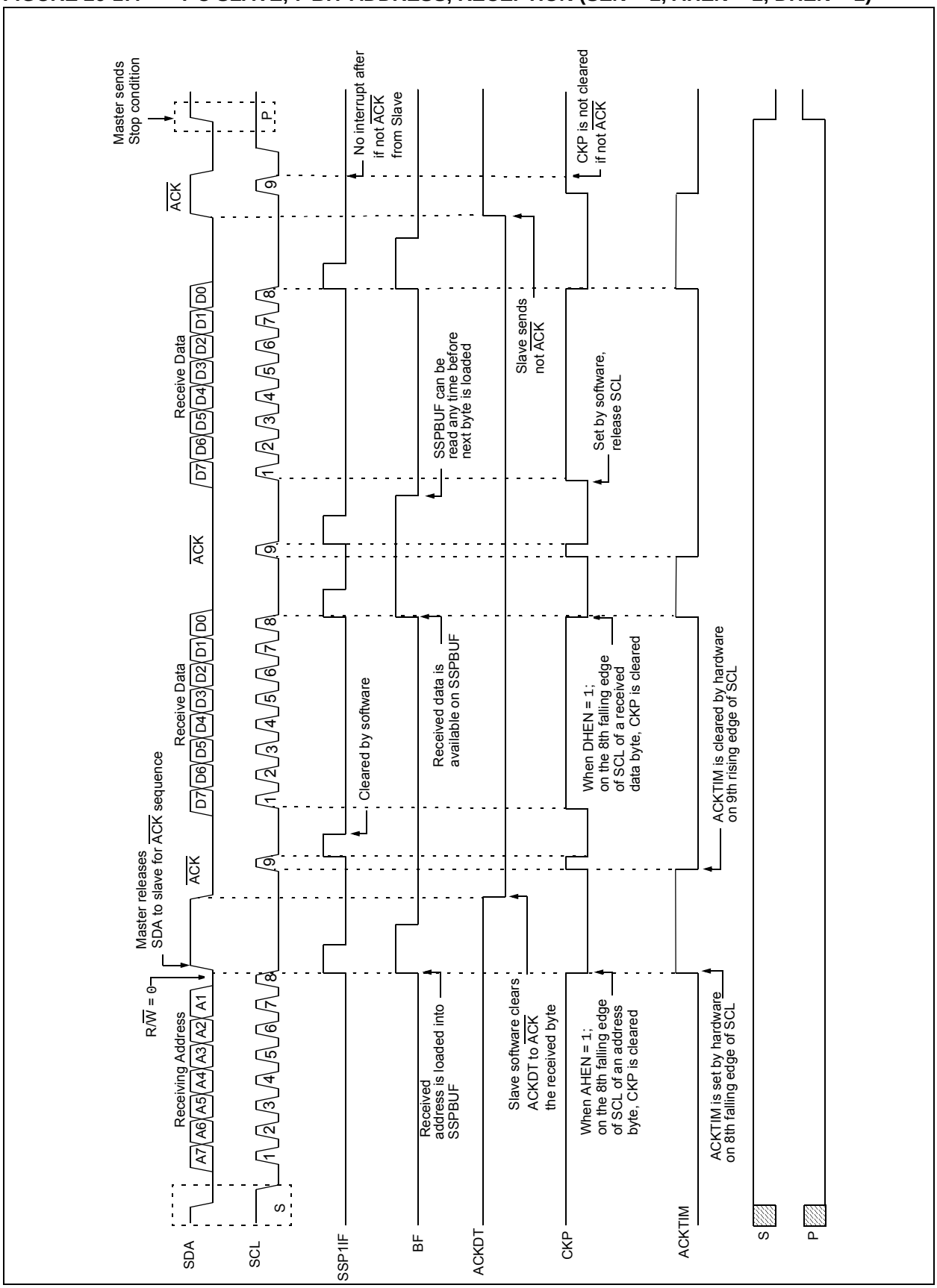

26.5.3 SLAVE TRANSMISSION

When the R/$\overline{W}$ bit of the incoming address byte is set and an address match occurs, the R/$\overline{W}$ bit of the SSPSTAT register is set. The received address is loaded into the SSPBUF register, and an $\overline{ACK}$ pulse is sent by the slave on the ninth bit.

Following the $\overline{ACK}$, slave hardware clears the CKP bit and the SCL pin is held low (see **Section 26.5.6 "Clock Stretching"** for more detail). By stretching the clock, the master will be unable to assert another clock pulse until the slave is done preparing the transmit data.

The transmit data must be loaded into the SSPBUF register which also loads the SSPSR register. Then the SCL pin should be released by setting the CKP bit of the SSPCON1 register. The eight data bits are shifted out on the falling edge of the SCL input. This ensures that the SDA signal is valid during the SCL high time.

The $\overline{ACK}$ pulse from the master-receiver is latched on the rising edge of the ninth SCL input pulse. This $\overline{ACK}$ value is copied to the ACKSTAT bit of the SSPCON2 register. If ACKSTAT is set (not $\overline{ACK}$), then the data transfer is complete. In this case, when the not $\overline{ACK}$ is latched by the slave, the slave goes idle and waits for another occurrence of the Start bit. If the SDA line was low ($\overline{ACK}$), the next transmit data must be loaded into the SSPBUF register. Again, the SCL pin must be released by setting bit CKP.

An MSSP interrupt is generated for each data transfer byte. The SSP1IF bit must be cleared by software and the SSPSTAT register is used to determine the status of the byte. The SSP1IF bit is set on the falling edge of the ninth clock pulse.

26.5.3.1 Slave Mode Bus Collision

A slave receives a Read request and begins shifting data out on the SDA line. If a bus collision is detected and the SBCDE bit of the SSPCON3 register is set, the BCL1IF bit of the PIR register is set. Once a bus collision is detected, the slave goes idle and waits to be addressed again. User software can use the BCL1IF bit to handle a slave bus collision.

26.5.3.2 7-bit Transmission

A master device can transmit a read request to a slave, and then clock data out of the slave. The list below outlines what software for a slave will need to do to accomplish a standard transmission. Figure 26-17 can be used as a reference to this list.

1. Master sends a Start condition on SDA and SCL.
2. S bit of SSPSTAT is set; SSP1IF is set if interrupt on Start detect is enabled.
3. Matching address with R/$\overline{W}$ bit set is received by the Slave setting SSP1IF bit.
4. Slave hardware generates an $\overline{ACK}$ and sets SSP1IF.
5. SSP1IF bit is cleared by user.
6. Software reads the received address from SSPBUF, clearing BF.
7. R/$\overline{W}$ is set so CKP was automatically cleared after the $\overline{ACK}$.
8. The slave software loads the transmit data into SSPBUF.
9. CKP bit is set releasing SCL, allowing the master to clock the data out of the slave.
10. SSP1IF is set after the $\overline{ACK}$ response from the master is loaded into the ACKSTAT register.
11. SSP1IF bit is cleared.
12. The slave software checks the ACKSTAT bit to see if the master wants to clock out more data.

> **Note 1:** If the master $\overline{ACK}$s the clock will be stretched.
>
> **2:** ACKSTAT is the only bit updated on the rising edge of SCL (9th) rather than the falling.

13. Steps 9-13 are repeated for each transmitted byte.
14. If the master sends a not $\overline{ACK}$; the clock is not held, but SSP1IF is still set.
15. The master sends a Restart condition or a Stop.
16. The slave is no longer addressed.

© 2012-2014 Microchip Technology Inc.

FIGURE 26-18: I²C SLAVE, 7-BIT ADDRESS, TRANSMISSION (AHEN = 0)

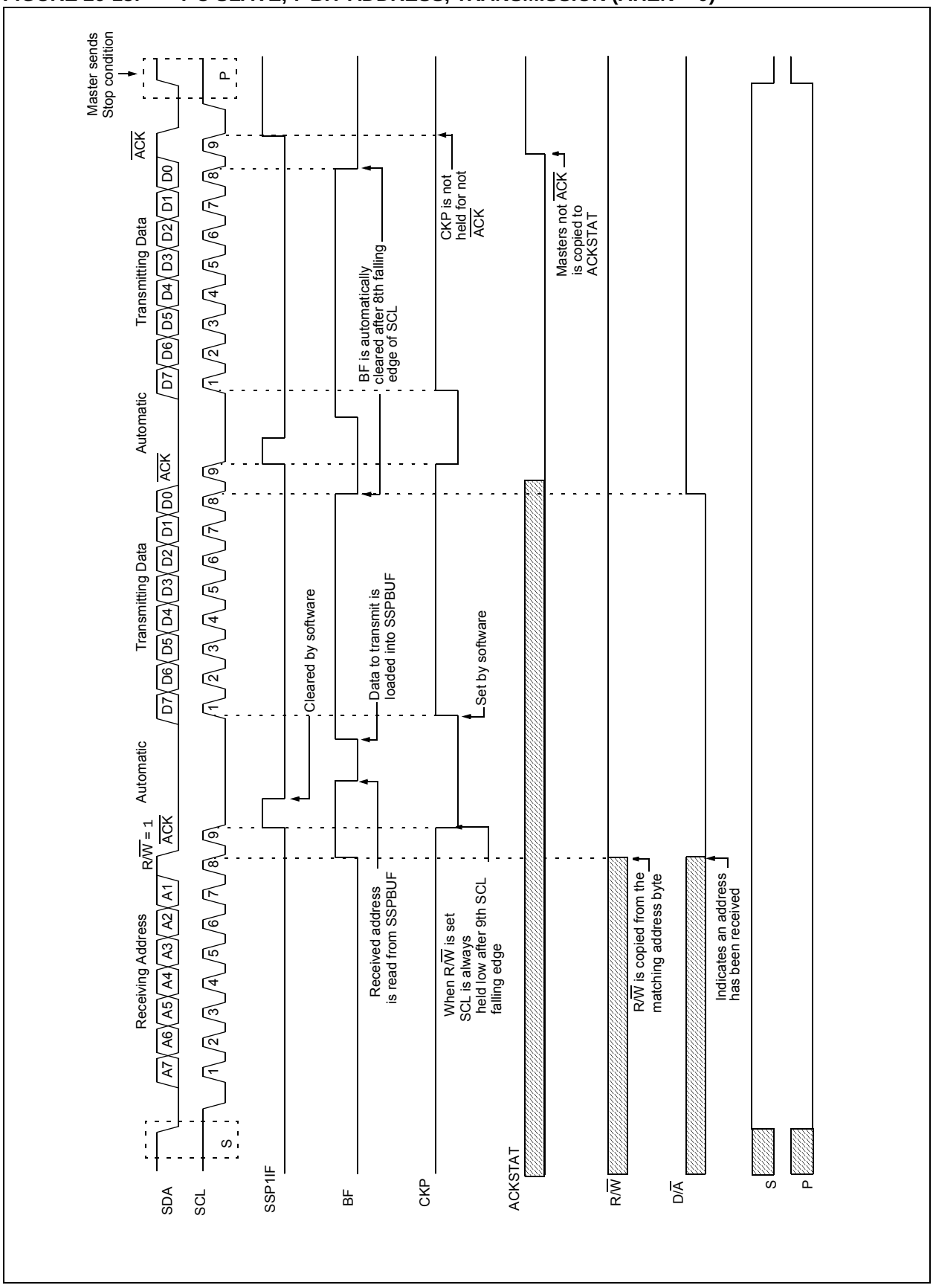

26.5.3.3 7-bit Transmission with Address Hold Enabled

Setting the AHEN bit of the SSPCON3 register enables additional clock stretching and interrupt generation after the 8th falling edge of a received matching address. Once a matching address has been clocked in, CKP is cleared and the SSP1IF interrupt is set.

Figure 26-18 displays a standard waveform of a 7-bit Address Slave Transmission with AHEN enabled.

1. Bus starts Idle.
2. Master sends Start condition; the S bit of SSPSTAT is set; SSP1IF is set if interrupt on Start detect is enabled.
3. Master sends matching address with R/$\overline{W}$ bit set. After the 8th falling edge of the SCL line the CKP bit is cleared and SSP1IF interrupt is generated.
4. Slave software clears SSP1IF.
5. Slave software reads ACKTIM bit of SSPCON3 register, and R/$\overline{W}$ and D/$\overline{A}$ of the SSPSTAT register to determine the source of the interrupt.
6. Slave reads the address value from the SSPBUF register clearing the BF bit.
7. Slave software decides from this information if it wishes to $\overline{ACK}$ or not $\overline{ACK}$ and sets the ACKDT bit of the SSPCON2 register accordingly.
8. Slave sets the CKP bit releasing SCL.
9. Master clocks in the $\overline{ACK}$ value from the slave.
10. Slave hardware automatically clears the CKP bit and sets SSP1IF after the $\overline{ACK}$ if the R/$\overline{W}$ bit is set.
11. Slave software clears SSP1IF.
12. Slave loads value to transmit to the master into SSPBUF setting the BF bit.

> **Note:** SSPBUF cannot be loaded until after the $\overline{ACK}$.

13. Slave sets the CKP bit releasing the clock.
14. Master clocks out the data from the slave and sends an $\overline{ACK}$ value on the 9th SCL pulse.
15. Slave hardware copies the $\overline{ACK}$ value into the ACKSTAT bit of the SSPCON2 register.
16. Steps 10-15 are repeated for each byte transmitted to the master from the slave.
17. If the master sends a not $\overline{ACK}$ the slave releases the bus allowing the master to send a Stop and end the communication.

> **Note:** Master must send a not $\overline{ACK}$ on the last byte to ensure that the slave releases the SCL line to receive a Stop.

© 2012-2014 Microchip Technology Inc.

FIGURE 26-19: I²C SLAVE, 7-BIT ADDRESS, TRANSMISSION (AHEN = 1)

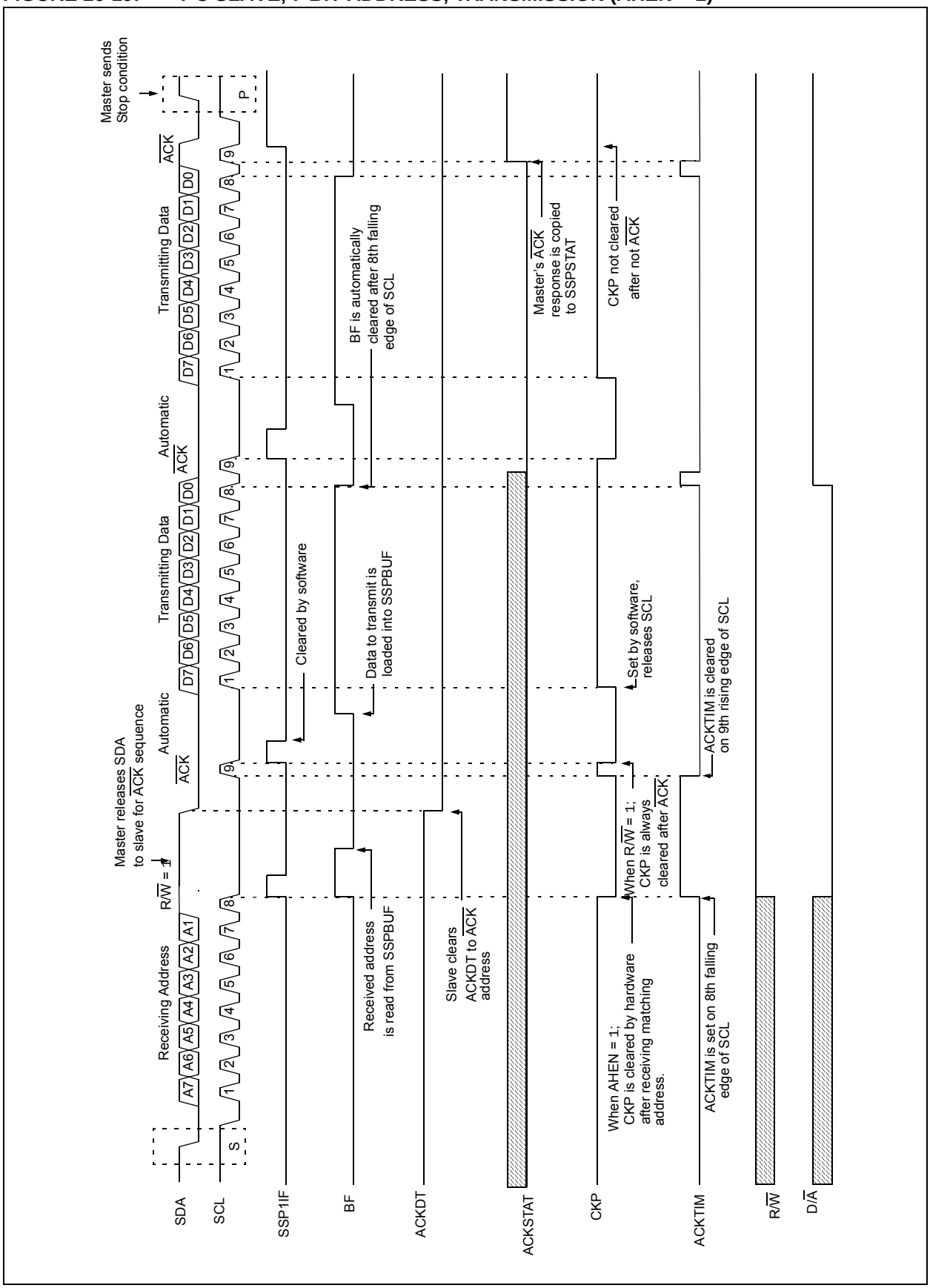

26.5.4 SLAVE MODE 10-BIT ADDRESS RECEPTION

This section describes a standard sequence of events for the MSSP module configured as an I^2C slave in 10-bit Addressing mode.

Figure 26-19 is used as a visual reference for this description.

This is a step by step process of what must be done by slave software to accomplish I^2C communication.

1. Bus starts Idle.
2. Master sends Start condition; S bit of SSPSTAT is set; SSP1IF is set if interrupt on Start detect is enabled.
3. Master sends matching high address with R/$\overline{W}$ bit clear; UA bit of the SSPSTAT register is set.
4. Slave sends $\overline{ACK}$ and SSP1IF is set.
5. Software clears the SSP1IF bit.
6. Software reads received address from SSPBUF clearing the BF flag.
7. Slave loads low address into SSPADD, releasing SCL.
8. Master sends matching low address byte to the slave; UA bit is set.

Note: Updates to the SSPADD register are not allowed until after the $\overline{ACK}$ sequence.

9. Slave sends $\overline{ACK}$ and SSP1IF is set.

Note: If the low address does not match, SSP1IF and UA are still set so that the slave software can set SSPADD back to the high address. BF is not set because there is no match. CKP is unaffected.

10. Slave clears SSP1IF.
11. Slave reads the received matching address from SSPBUF clearing BF.
12. Slave loads high address into SSPADD.
13. Master clocks a data byte to the slave and clocks out the slaves $\overline{ACK}$ on the 9th SCL pulse; SSP1IF is set.
14. If SEN bit of SSPCON2 is set, CKP is cleared by hardware and the clock is stretched.
15. Slave clears SSP1IF.
16. Slave reads the received byte from SSPBUF clearing BF.
17. If SEN is set the slave sets CKP to release the SCL.
18. Steps 13-17 repeat for each received byte.
19. Master sends Stop to end the transmission.

26.5.5 10-BIT ADDRESSING WITH ADDRESS OR DATA HOLD

Reception using 10-bit addressing with AHEN or DHEN set is the same as with 7-bit modes. The only difference is the need to update the SSPADD register using the UA bit. All functionality, specifically when the CKP bit is cleared and SCL line is held low are the same. Figure 26-20 can be used as a reference of a slave in 10-bit addressing with AHEN set.

Figure 26-21 shows a standard waveform for a slave transmitter in 10-bit Addressing mode.

© 2012-2014 Microchip Technology Inc.

FIGURE 26-20: I²C SLAVE, 10-BIT ADDRESS, RECEPTION (SEN = 1, AHEN = 0, DHEN = 0)

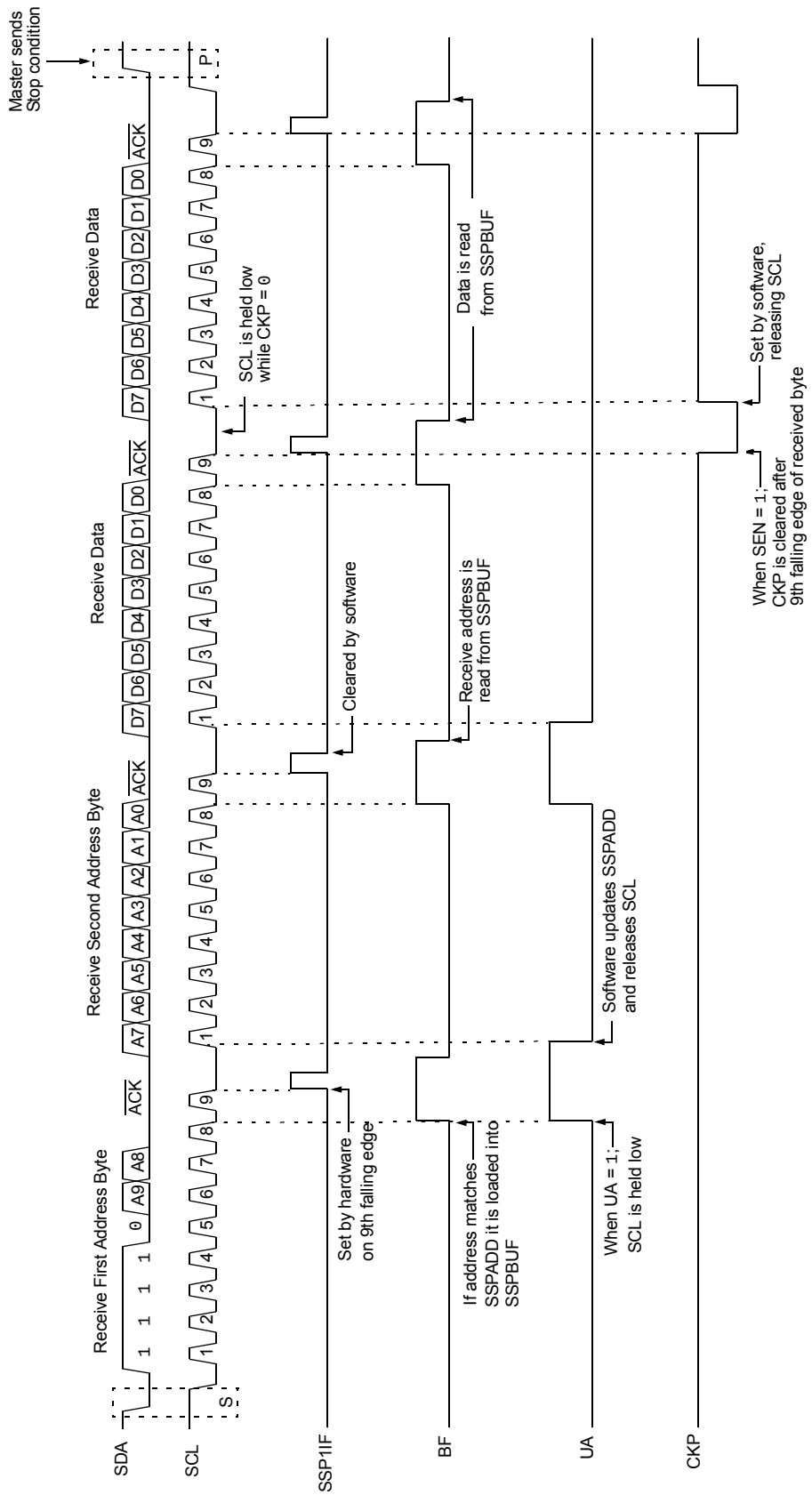

FIGURE 26-21: I²C SLAVE, 10-BIT ADDRESS, RECEPTION (SEN = 0, AHEN = 1, DHEN = 0)

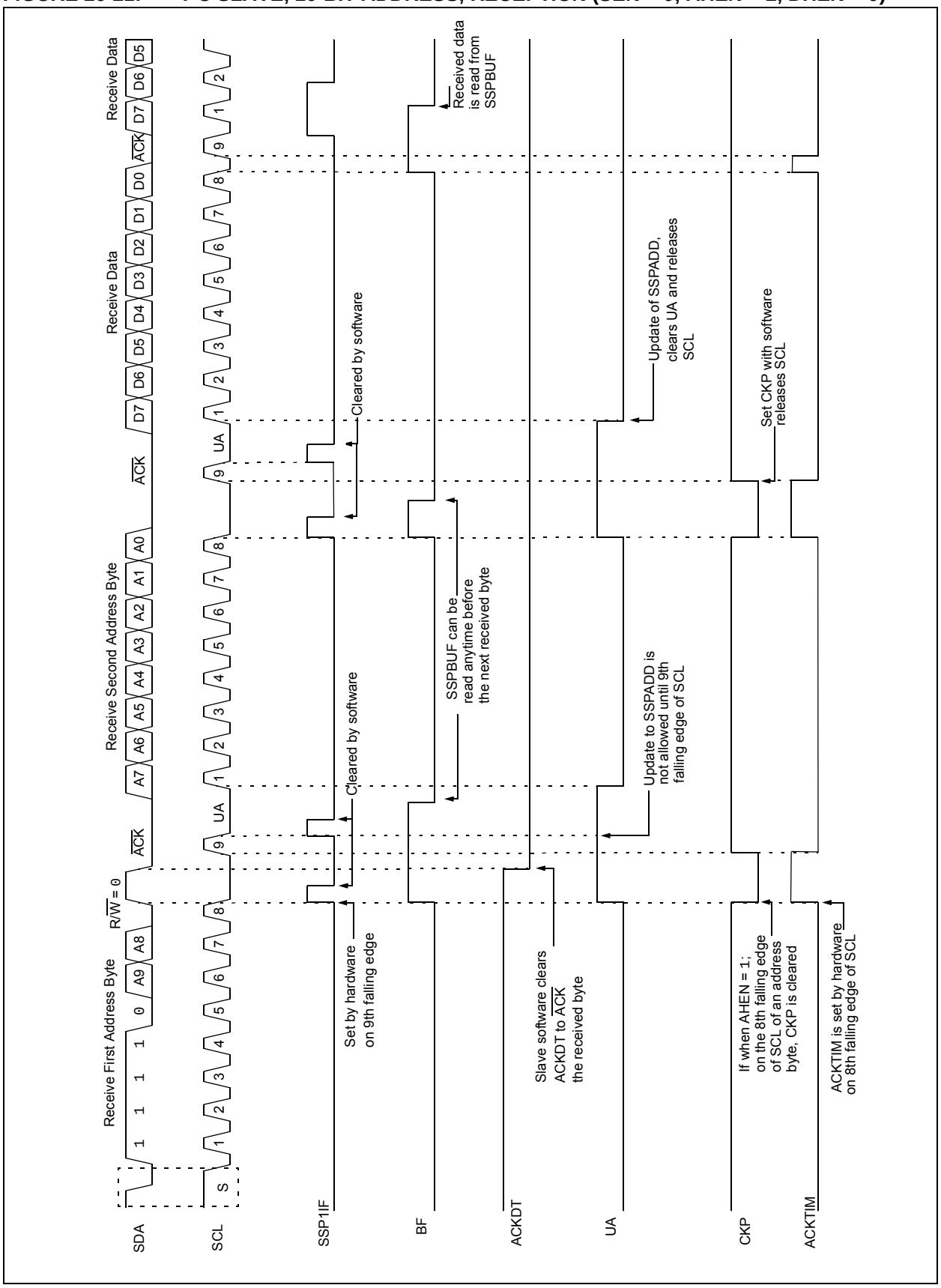

© 2012-2014 Microchip Technology Inc.

FIGURE 26-22: I²C SLAVE, 10-BIT ADDRESS, TRANSMISSION (SEN = 0, AHEN = 0, DHEN = 0)

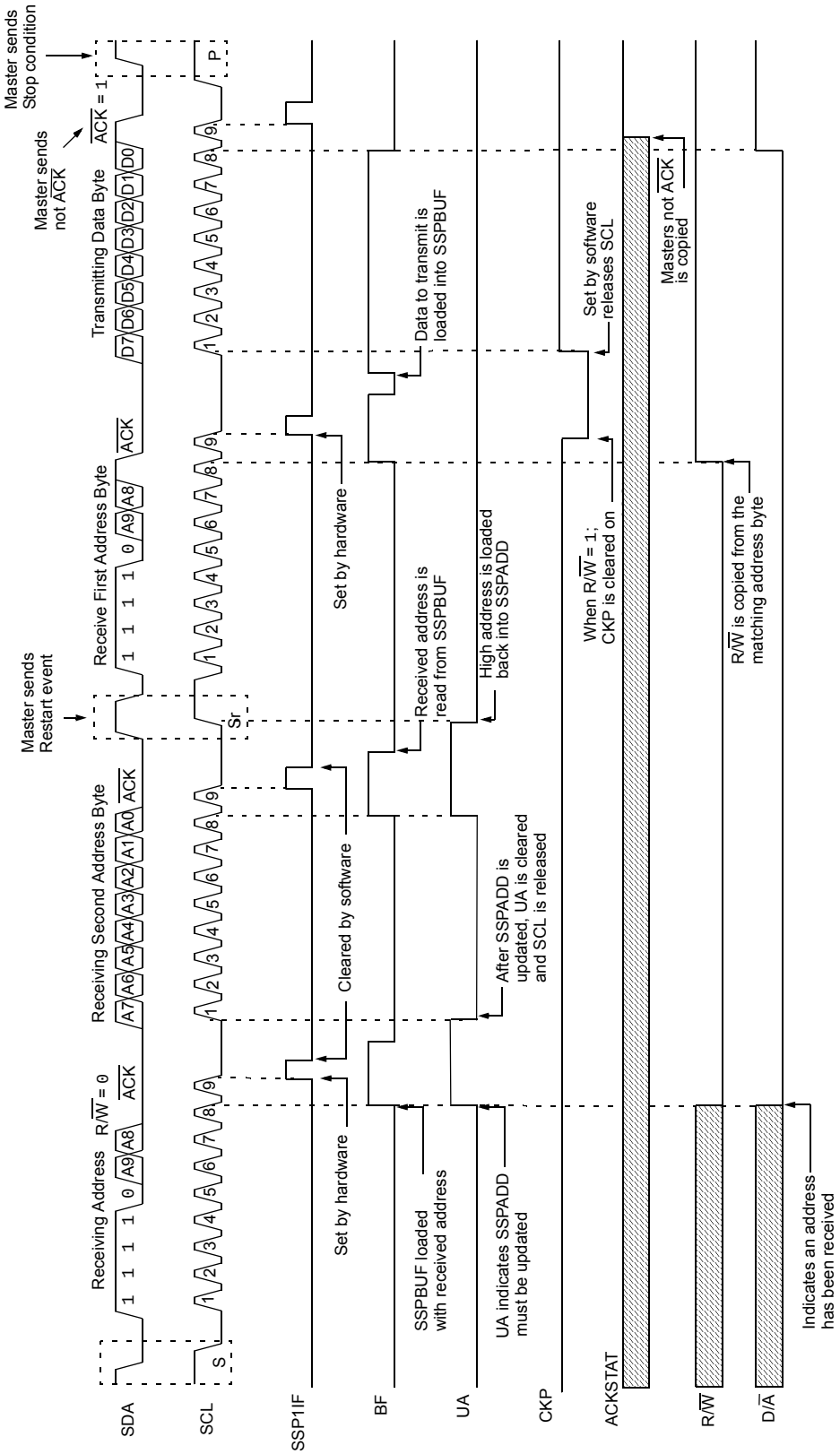

26.5.6 CLOCK STRETCHING

Clock stretching occurs when a device on the bus holds the SCL line low effectively pausing communication. The slave may stretch the clock to allow more time to handle data or prepare a response for the master device. A master device is not concerned with stretching as anytime it is active on the bus and not transferring data it is stretching. Any stretching done by a slave is invisible to the master software and handled by the hardware that generates SCL.

The CKP bit of the SSPCON1 register is used to control stretching in software. Any time the CKP bit is cleared, the module will wait for the SCL line to go low and then hold it. Setting CKP will release SCL and allow more communication.

26.5.6.1 Normal Clock Stretching

Following an $\overline{\text{ACK}}$ if the R/$\overline{\text{W}}$ bit of SSPSTAT is set, a read request, the slave hardware will clear CKP. This allows the slave time to update SSPBUF with data to transfer to the master. If the SEN bit of SSPCON2 is set, the slave hardware will always stretch the clock after the $\overline{\text{ACK}}$ sequence. Once the slave is ready; CKP is set by software and communication resumes.

> **Note 1:** The BF bit has no effect on if the clock will be stretched or not. This is different than previous versions of the module that would not stretch the clock, clear CKP, if SSPBUF was read before the 9th falling edge of SCL.
>
> **2:** Previous versions of the module did not stretch the clock for a transmission if SSPBUF was loaded before the 9th falling edge of SCL. It is now always cleared for read requests.

26.5.6.2 10-bit Addressing Mode

In 10-bit Addressing mode, when the UA bit is set the clock is always stretched. This is the only time the SCL is stretched without CKP being cleared. SCL is released immediately after a write to SSPADD.

> **Note:** Previous versions of the module did not stretch the clock if the second address byte did not match.

26.5.6.3 Byte NACKing

When AHEN bit of SSPCON3 is set; CKP is cleared by hardware after the 8th falling edge of SCL for a received matching address byte. When DHEN bit of SSPCON3 is set; CKP is cleared after the 8th falling edge of SCL for received data.

Stretching after the 8th falling edge of SCL allows the slave to look at the received address or data and decide if it wants to ACK the received data.

26.5.7 CLOCK SYNCHRONIZATION AND THE CKP BIT

Any time the CKP bit is cleared, the module will wait for the SCL line to go low and then hold it. However, clearing the CKP bit will not assert the SCL output low until the SCL output is already sampled low. Therefore, the CKP bit will not assert the SCL line until an external I^2C master device has already asserted the SCL line. The SCL output will remain low until the CKP bit is set and all other devices on the I^2C bus have released SCL. This ensures that a write to the CKP bit will not violate the minimum high time requirement for SCL (see Figure 26-22).

FIGURE 26-23: CLOCK SYNCHRONIZATION TIMING

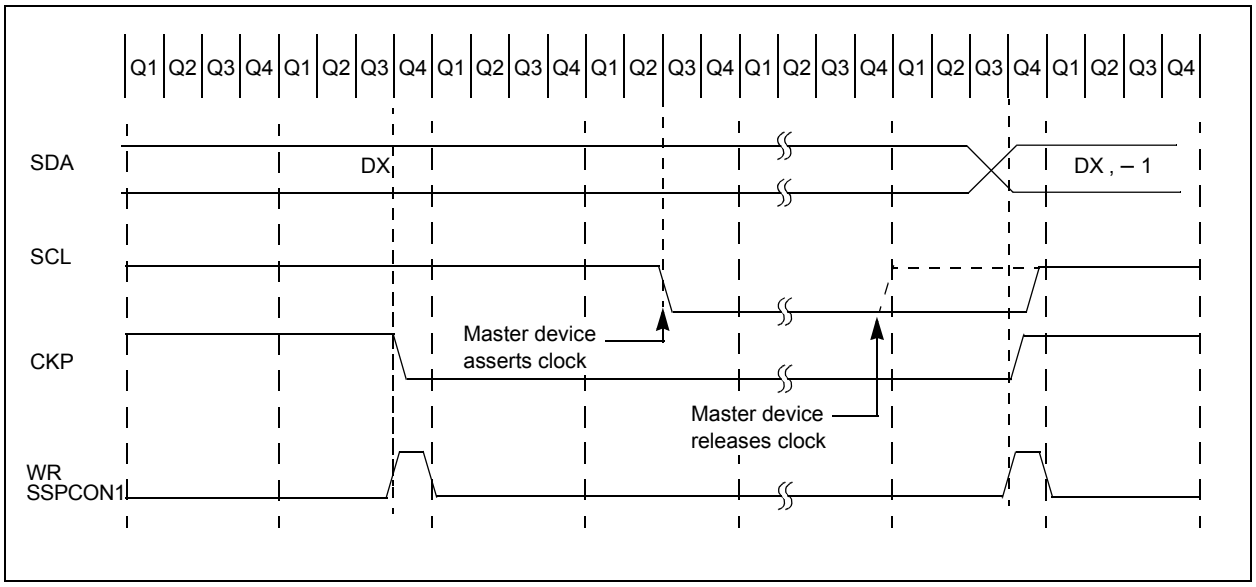

© 2012-2014 Microchip Technology Inc.

26.5.8 GENERAL CALL ADDRESS SUPPORT

The addressing procedure for the I^{2}C bus is such that the first byte after the Start condition usually determines which device will be the slave addressed by the master device. The exception is the general call address which can address all devices. When this address is used, all devices should, in theory, respond with an acknowledge.

The general call address is a reserved address in the I^{2}C protocol, defined as address 0x00. When the GCEN bit of the SSPCON2 register is set, the slave module will automatically $\overline{\text{ACK}}$ the reception of this address regardless of the value stored in SSPADD. After the slave clocks in an address of all zeros with the R/$\overline{\text{W}}$ bit clear, an interrupt is generated and slave software can read SSPBUF and respond. Figure 26-23 shows a general call reception sequence.

In 10-bit Address mode, the UA bit will not be set on the reception of the general call address. The slave will prepare to receive the second byte as data, just as it would in 7-bit mode.

If the AHEN bit of the SSPCON3 register is set, just as with any other address reception, the slave hardware will stretch the clock after the 8th falling edge of SCL. The slave must then set its ACKDT value and release the clock with communication progressing as it would normally.

FIGURE 26-24: SLAVE MODE GENERAL CALL ADDRESS SEQUENCE

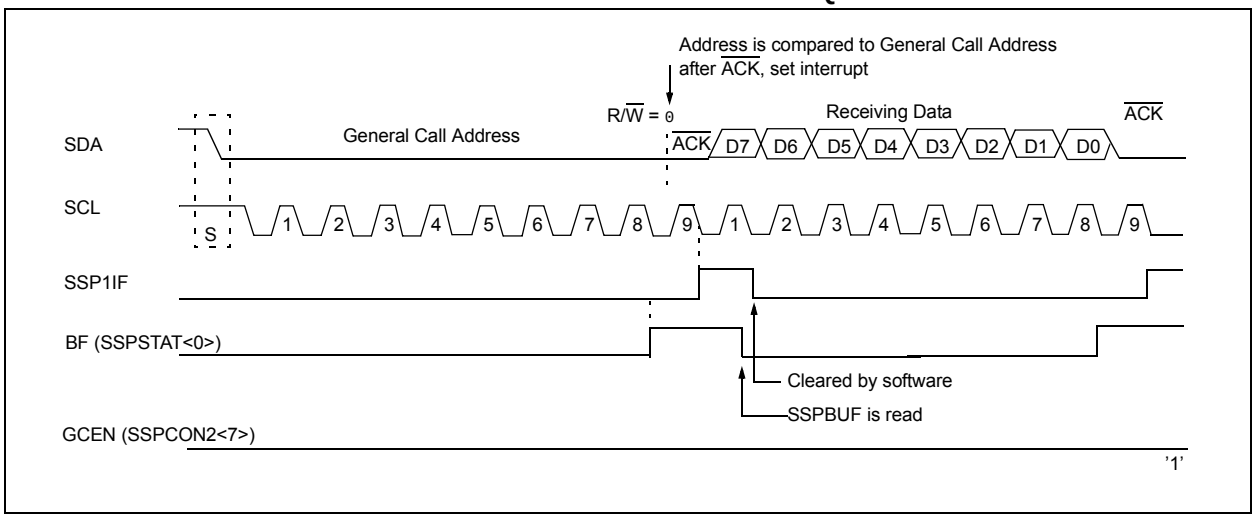

26.5.9 SSP MASK REGISTER

An SSP Mask (SSPMSK) register (Register 26-5) is available in I^{2}C Slave mode as a mask for the value held in the SSPSR register during an address comparison operation. A zero ('0') bit in the SSPMSK register has the effect of making the corresponding bit of the received address a "don't care".

This register is reset to all '1's upon any Reset condition and, therefore, has no effect on standard SSP operation until written with a mask value.

The SSP Mask register is active during:

- 7-bit Address mode: address compare of A<7:1>.
- 10-bit Address mode: address compare of A<7:0> only. The SSP mask has no effect during the reception of the first (high) byte of the address.

26.6 I²C Master Mode

Master mode is enabled by setting and clearing the appropriate SSPM bits in the SSPCON1 register and by setting the SSPEN bit. In Master mode, the SDA and SCK pins must be configured as inputs. The MSSP peripheral hardware will override the output driver TRIS controls when necessary to drive the pins low.

Master mode of operation is supported by interrupt generation on the detection of the Start and Stop conditions. The Stop (P) and Start (S) bits are cleared from a Reset or when the MSSP module is disabled. Control of the I²C bus may be taken when the P bit is set, or the bus is Idle.

In Firmware Controlled Master mode, user code conducts all I²C bus operations based on Start and Stop bit condition detection. Start and Stop condition detection is the only active circuitry in this mode. All other communication is done by the user software directly manipulating the SDA and SCL lines.

The following events will cause the SSP Interrupt Flag bit, SSP1IF, to be set (SSP interrupt, if enabled):

- Start condition detected
- Stop condition detected
- Data transfer byte transmitted/received
- Acknowledge transmitted/received
- Repeated Start generated

Note 1: The MSSP module, when configured in I²C Master mode, does not allow queueing of events. For instance, the user is not allowed to initiate a Start condition and immediately write the SSPBUF register to initiate transmission before the Start condition is complete. In this case, the SSPBUF will not be written to and the WCOL bit will be set, indicating that a write to the SSPBUF did not occur

2: When in Master mode, Start/Stop detection is masked and an interrupt is generated when the SEN/PEN bit is cleared and the generation is complete.

26.6.1 I²C MASTER MODE OPERATION

The master device generates all of the serial clock pulses and the Start and Stop conditions. A transfer is ended with a Stop condition or with a Repeated Start condition. Since the Repeated Start condition is also the beginning of the next serial transfer, the I²C bus will not be released.

In Master Transmitter mode, serial data is output through SDA, while SCL outputs the serial clock. The first byte transmitted contains the slave address of the receiving device (7 bits) and the Read/$\overline{\text{Write}}$ (R/$\overline{\text{W}}$) bit. In this case, the R/$\overline{\text{W}}$ bit will be logic ‘0’. Serial data is transmitted 8 bits at a time. After each byte is transmitted, an Acknowledge bit is received. Start and Stop conditions are output to indicate the beginning and the end of a serial transfer.

In Master Receive mode, the first byte transmitted contains the slave address of the transmitting device (7 bits) and the R/$\overline{\text{W}}$ bit. In this case, the R/$\overline{\text{W}}$ bit will be logic ‘1’. Thus, the first byte transmitted is a 7-bit slave address followed by a ‘1’ to indicate the receive bit. Serial data is received via SDA, while SCL outputs the serial clock. Serial data is received 8 bits at a time. After each byte is received, an Acknowledge bit is transmitted. Start and Stop conditions indicate the beginning and end of transmission.

A Baud Rate Generator is used to set the clock frequency output on SCL. See **Section 26.7 “Baud Rate Generator”** for more detail.

© 2012-2014 Microchip Technology Inc.

26.6.2 CLOCK ARBITRATION

Clock arbitration occurs when the master, during any receive, transmit or Repeated Start/Stop condition, releases the SCL pin (SCL allowed to float high). When the SCL pin is allowed to float high, the Baud Rate Generator (BRG) is suspended from counting until the SCL pin is actually sampled high. When the SCL pin is sampled high, the Baud Rate Generator is reloaded with the contents of SSPADD<7:0> and begins counting. This ensures that the SCL high time will always be at least one BRG rollover count in the event that the clock is held low by an external device (Figure 26-25).

FIGURE 26-25: BAUD RATE GENERATOR TIMING WITH CLOCK ARBITRATION

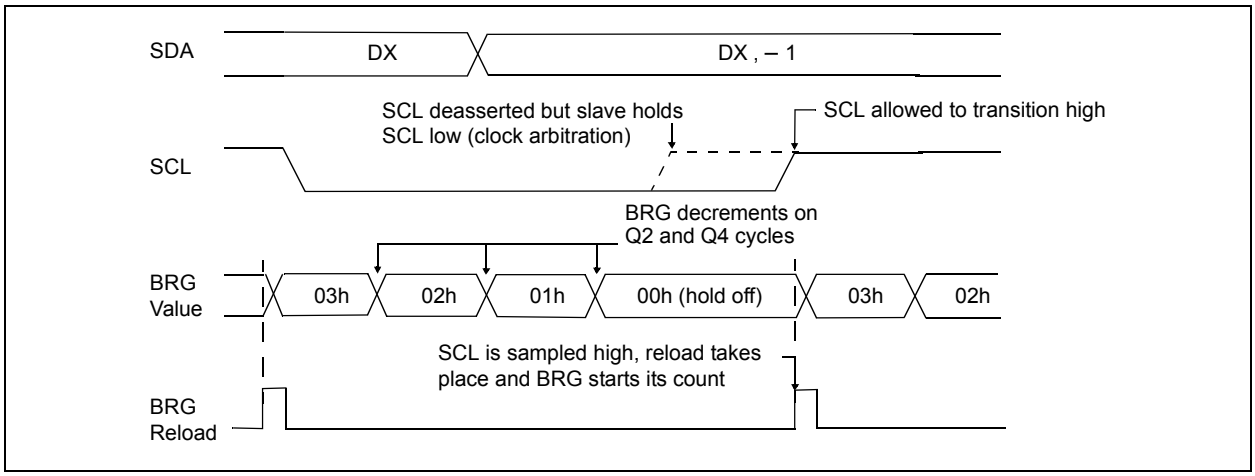

26.6.3 WCOL STATUS FLAG

If the user writes the SSPBUF when a Start, Restart, Stop, Receive or Transmit sequence is in progress, the WCOL is set and the contents of the buffer are unchanged (the write does not occur). Any time the WCOL bit is set it indicates that an action on SSPBUF was attempted while the module was not idle.

Note:	Because queueing of events is not allowed, writing to the lower 5 bits of SSPCON2 is disabled until the Start condition is complete.

26.6.4 I²C MASTER MODE START CONDITION TIMING

To initiate a Start condition, the user sets the Start Enable bit, SEN bit of the SSPCON2 register. If the SDA and SCL pins are sampled high, the Baud Rate Generator is reloaded with the contents of SSPADD<7:0> and starts its count. If SCL and SDA are both sampled high when the Baud Rate Generator times out (TBRG), the SDA pin is driven low. The action of the SDA being driven low while SCL is high is the Start condition and causes the S bit of the SSPSTAT1 register to be set. Following this, the Baud Rate Generator is reloaded with the contents of SSPADD<7:0> and resumes its count. When the Baud Rate Generator times out (TBRG), the SEN bit of the SSPCON2 register will be automatically cleared by hardware; the Baud Rate Generator is suspended, leaving the SDA line held low and the Start condition is complete.

Note 1: If at the beginning of the Start condition, the SDA and SCL pins are already sampled low, or if during the Start condition, the SCL line is sampled low before the SDA line is driven low, a bus collision occurs, the Bus Collision Interrupt Flag, BCL1IF, is set, the Start condition is aborted and the I²C module is reset into its Idle state.

2: The Philips I²C specification states that a bus collision cannot occur on a Start.

FIGURE 26-26: FIRST START BIT TIMING

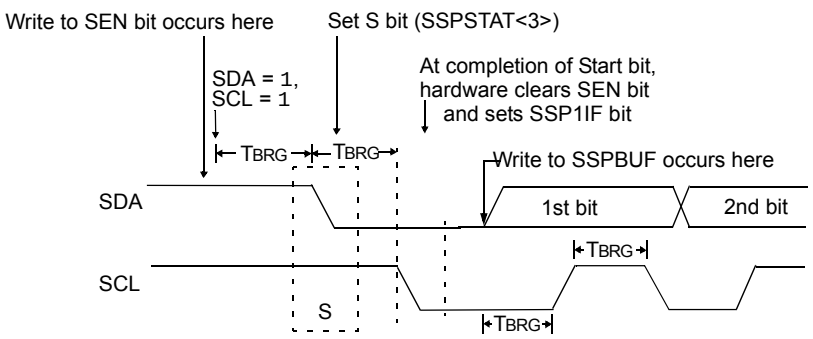

© 2012-2014 Microchip Technology Inc.

26.6.5 I²C MASTER MODE REPEATED START CONDITION TIMING

A Repeated Start condition occurs when the RSEN bit of the SSPCON2 register is programmed high and the master state machine is no longer active. When the RSEN bit is set, the SCL pin is asserted low. When the SCL pin is sampled low, the Baud Rate Generator is loaded and begins counting. The SDA pin is released (brought high) for one Baud Rate Generator count (TBRG). When the Baud Rate Generator times out, if SDA is sampled high, the SCL pin will be deasserted (brought high). When SCL is sampled high, the Baud Rate Generator is reloaded and begins counting. SDA and SCL must be sampled high for one TBRG. This action is then followed by assertion of the SDA pin (SDA = 0) for one TBRG while SCL is high. SCL is asserted low. Following this, the RSEN bit of the SSPCON2 register will be automatically cleared and the Baud Rate Generator will not be reloaded, leaving the SDA pin held low. As soon as a Start condition is detected on the SDA and SCL pins, the S bit of the SSPSTAT register will be set. The SSP1IF bit will not be set until the Baud Rate Generator has timed out.

Note 1: If RSEN is programmed while any other event is in progress, it will not take effect.

2: A bus collision during the Repeated Start condition occurs if:

- SDA is sampled low when SCL goes from low-to-high.
- SCL goes low before SDA is asserted low. This may indicate that another master is attempting to transmit a data '1'.

FIGURE 26-27: REPEAT START CONDITION WAVEFORM

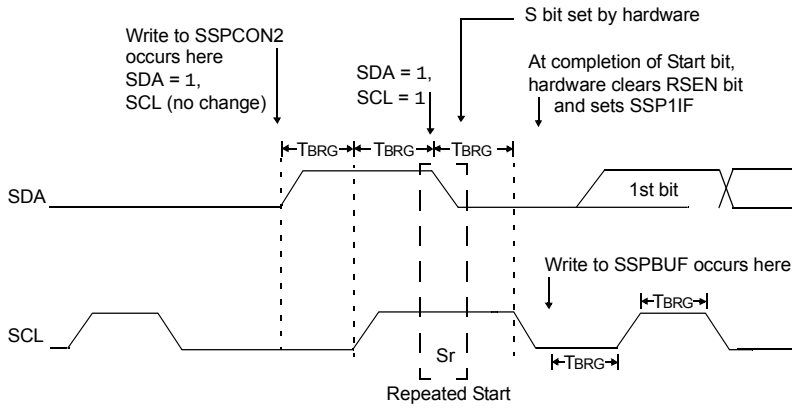

26.6.6 I²C MASTER MODE TRANSMISSION

Transmission of a data byte, a 7-bit address or the other half of a 10-bit address is accomplished by simply writing a value to the SSPBUF register. This action will set the Buffer Full flag bit, BF and allow the Baud Rate Generator to begin counting and start the next transmission. Each bit of address/data will be shifted out onto the SDA pin after the falling edge of SCL is asserted. SCL is held low for one Baud Rate Generator rollover count (TBRG). Data should be valid before SCL is released high. When the SCL pin is released high, it is held that way for TBRG. The data on the SDA pin must remain stable for that duration and some hold time after the next falling edge of SCL. After the eighth bit is shifted out (the falling edge of the eighth clock), the BF flag is cleared and the master releases SDA. This allows the slave device being addressed to respond with an $\overline{ACK}$ bit during the ninth bit time if an address match occurred, or if data was received properly. The status of $\overline{ACK}$ is written into the ACKSTAT bit on the rising edge of the ninth clock. If the master receives an Acknowledge, the Acknowledge Status bit, ACKSTAT, is cleared. If not, the bit is set. After the ninth clock, the SSP1IF bit is set and the master clock (Baud Rate Generator) is suspended until the next data byte is loaded into the SSPBUF, leaving SCL low and SDA unchanged (Figure 26-27).

After the write to the SSPBUF, each bit of the address will be shifted out on the falling edge of SCL until all seven address bits and the R/$\overline{W}$ bit are completed. On the falling edge of the eighth clock, the master will release the SDA pin, allowing the slave to respond with an Acknowledge. On the falling edge of the ninth clock, the master will sample the SDA pin to see if the address was recognized by a slave. The status of the $\overline{ACK}$ bit is loaded into the ACKSTAT Status bit of the SSPCON2 register. Following the falling edge of the ninth clock transmission of the address, the SSP1IF is set, the BF flag is cleared and the Baud Rate Generator is turned off until another write to the SSPBUF takes place, holding SCL low and allowing SDA to float.

26.6.6.1 BF Status Flag

In Transmit mode, the BF bit of the SSPSTAT register is set when the CPU writes to SSPBUF and is cleared when all 8 bits are shifted out.

26.6.6.2 WCOL Status Flag

If the user writes the SSPBUF when a transmit is already in progress (i.e., SSPSR is still shifting out a data byte), the WCOL is set and the contents of the buffer are unchanged (the write does not occur).

WCOL must be cleared by software before the next transmission.

26.6.6.3 ACKSTAT Status Flag

In Transmit mode, the ACKSTAT bit of the SSPCON2 register is cleared when the slave has sent an Acknowledge ($\overline{ACK}$ = 0) and is set when the slave does not Acknowledge ($\overline{ACK}$ = 1). A slave sends an Acknowledge when it has recognized its address (including a general call), or when the slave has properly received its data.

26.6.6.4 Typical transmit sequence:

1. The user generates a Start condition by setting the SEN bit of the SSPCON2 register.
2. SSP1IF is set by hardware on completion of the Start.
3. SSP1IF is cleared by software.
4. The MSSP module will wait the required start time before any other operation takes place.
5. The user loads the SSPBUF with the slave address to transmit.
6. Address is shifted out the SDA pin until all 8 bits are transmitted. Transmission begins as soon as SSPBUF is written to.
7. The MSSP module shifts in the $\overline{ACK}$ bit from the slave device and writes its value into the ACKSTAT bit of the SSPCON2 register.
8. The MSSP module generates an interrupt at the end of the ninth clock cycle by setting the SSP1IF bit.
9. The user loads the SSPBUF with eight bits of data.
10. Data is shifted out the SDA pin until all 8 bits are transmitted.
11. The MSSP module shifts in the $\overline{ACK}$ bit from the slave device and writes its value into the ACKSTAT bit of the SSPCON2 register.
12. Steps 8-11 are repeated for all transmitted data bytes.
13. The user generates a Stop or Restart condition by setting the PEN or RSEN bits of the SSPCON2 register. Interrupt is generated once the Stop/Restart condition is complete.

© 2012-2014 Microchip Technology Inc.

FIGURE 26-28: I²C MASTER MODE WAVEFORM (TRANSMISSION, 7 OR 10-BIT ADDRESS)

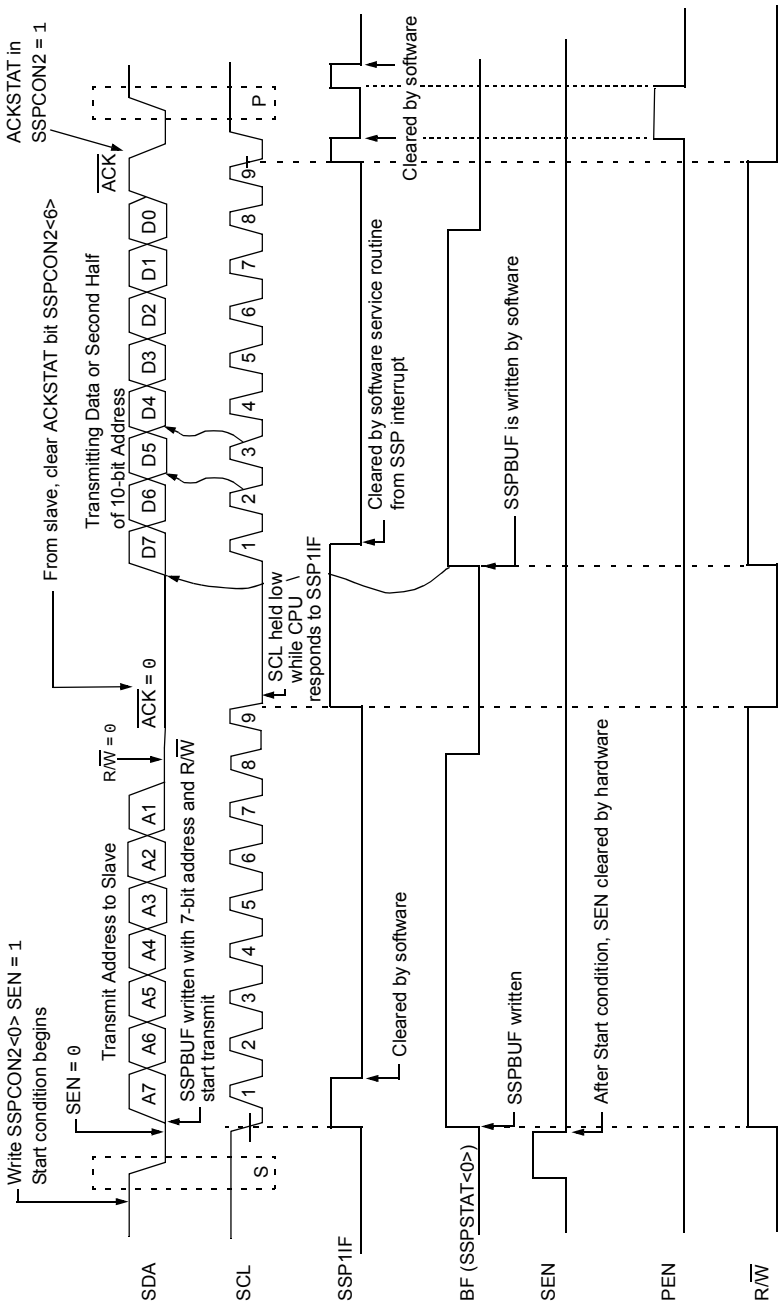

26.6.7 I²C MASTER MODE RECEPTION

Master mode reception is enabled by programming the Receive Enable bit, RCEN bit of the SSPCON2 register.

> **Note:** The MSSP module must be in an Idle state before the RCEN bit is set or the RCEN bit will be disregarded.

The Baud Rate Generator begins counting and on each rollover, the state of the SCL pin changes (high-to-low/low-to-high) and data is shifted into the SSPSR. After the falling edge of the eighth clock, the receive enable flag is automatically cleared, the contents of the SSPSR are loaded into the SSPBUF, the BF flag bit is set, the SSP1IF flag bit is set and the Baud Rate Generator is suspended from counting, holding SCL low. The MSSP is now in Idle state awaiting the next command. When the buffer is read by the CPU, the BF flag bit is automatically cleared. The user can then send an Acknowledge bit at the end of reception by setting the Acknowledge Sequence Enable, ACKEN bit of the SSPCON2 register.

26.6.7.1 BF Status Flag

In receive operation, the BF bit is set when an address or data byte is loaded into SSPBUF from SSPSR. It is cleared when the SSPBUF register is read.

26.6.7.2 SSPOV Status Flag

In receive operation, the SSPOV bit is set when 8 bits are received into the SSPSR and the BF flag bit is already set from a previous reception.

26.6.7.3 WCOL Status Flag

If the user writes the SSPBUF when a receive is already in progress (i.e., SSPSR is still shifting in a data byte), the WCOL bit is set and the contents of the buffer are unchanged (the write does not occur).

26.6.7.4 Typical Receive Sequence:

1. The user generates a Start condition by setting the SEN bit of the SSPCON2 register.
2. SSP1IF is set by hardware on completion of the Start.
3. SSP1IF is cleared by software.
4. User writes SSPBUF with the slave address to transmit and the R/$\overline{W}$ bit set.
5. Address is shifted out the SDA pin until all 8 bits are transmitted. Transmission begins as soon as SSPBUF is written to.
6. The MSSP module shifts in the $\overline{ACK}$ bit from the slave device and writes its value into the ACKSTAT bit of the SSPCON2 register.
7. The MSSP module generates an interrupt at the end of the ninth clock cycle by setting the SSP1IF bit.
8. User sets the RCEN bit of the SSPCON2 register and the master clocks in a byte from the slave.
9. After the 8th falling edge of SCL, SSP1IF and BF are set.
10. User clears the SSP1IF bit and reads the received byte from SSPUF, which clears the BF flag.
11. The user either clears the SSPCON2 register's ACKDT bit to receive another byte or sets the ADKDT bit to suppress further data and then initiates the acknowledge sequence by setting the ACKEN bit.
12. Master's ACK or $\overline{ACK}$ is clocked out to the slave and SSP1IF is set.
13. User clears SSP1IF.
14. Steps 8-13 are repeated for each received byte from the slave.
15. If the ACKST bit was set in step 11 then the user can send a STOP to release the bus.

© 2012-2014 Microchip Technology Inc.

FIGURE 26-29: I²C MASTER MODE WAVEFORM (RECEPTION, 7-BIT ADDRESS)

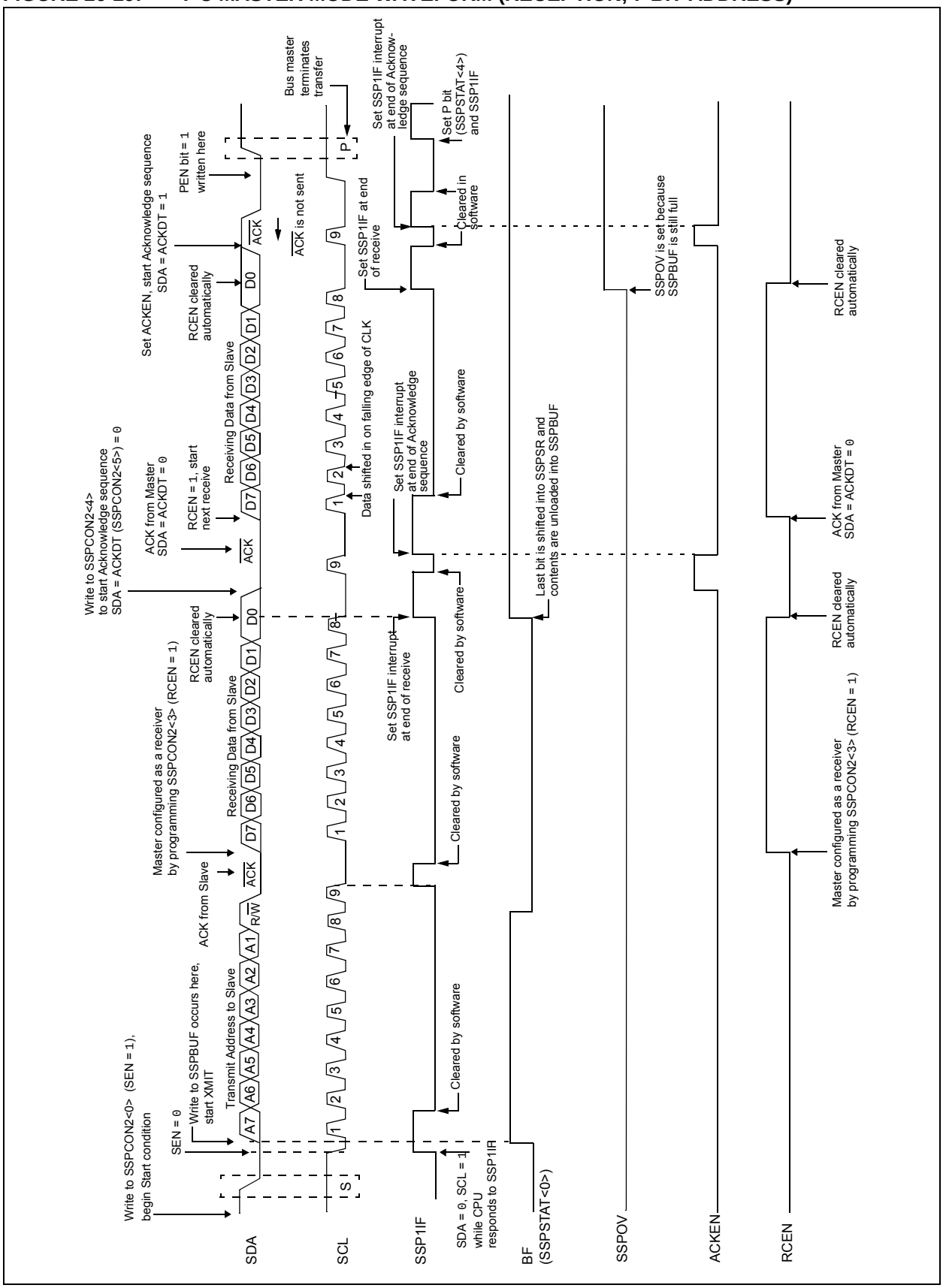

26.6.8 ACKNOWLEDGE SEQUENCE TIMING

An Acknowledge sequence is enabled by setting the Acknowledge Sequence Enable bit, ACKEN bit of the SSPCON2 register. When this bit is set, the SCL pin is pulled low and the contents of the Acknowledge data bit are presented on the SDA pin. If the user wishes to generate an Acknowledge, then the ACKDT bit should be cleared. If not, the user should set the ACKDT bit before starting an Acknowledge sequence. The Baud Rate Generator then counts for one rollover period (TBRG) and the SCL pin is deasserted (pulled high). When the SCL pin is sampled high (clock arbitration), the Baud Rate Generator counts for TBRG. The SCL pin is then pulled low. Following this, the ACKEN bit is automatically cleared, the Baud Rate Generator is turned off and the MSSP module then goes into Idle mode (Figure 26-29).

26.6.8.1 WCOL Status Flag

If the user writes the SSPBUF when an Acknowledge sequence is in progress, then WCOL is set and the contents of the buffer are unchanged (the write does not occur).

26.6.9 STOP CONDITION TIMING

A Stop bit is asserted on the SDA pin at the end of a receive/transmit by setting the Stop Sequence Enable bit, PEN bit of the SSPCON2 register. At the end of a receive/transmit, the SCL line is held low after the falling edge of the ninth clock. When the PEN bit is set, the master will assert the SDA line low. When the SDA line is sampled low, the Baud Rate Generator is reloaded and counts down to '0'. When the Baud Rate Generator times out, the SCL pin will be brought high and one TBRG (Baud Rate Generator rollover count) later, the SDA pin will be deasserted. When the SDA pin is sampled high while SCL is high, the P bit of the SSPSTAT register is set. A TBRG later, the PEN bit is cleared and the SSP1IF bit is set (Figure 26-30).

26.6.9.1 WCOL Status Flag

If the user writes the SSPBUF when a Stop sequence is in progress, then the WCOL bit is set and the contents of the buffer are unchanged (the write does not occur).

FIGURE 26-30: ACKNOWLEDGE SEQUENCE WAVEFORM

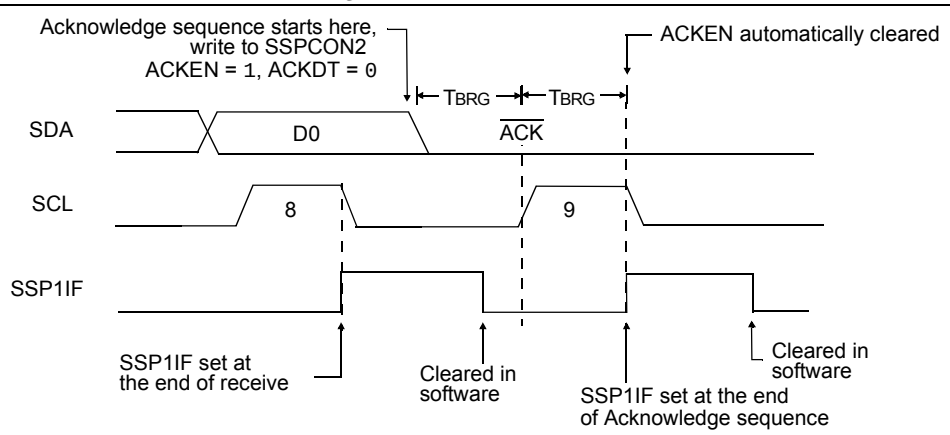

Note: TBRG = one Baud Rate Generator period.

© 2012-2014 Microchip Technology Inc.

FIGURE 26-31: STOP CONDITION RECEIVE OR TRANSMIT MODE

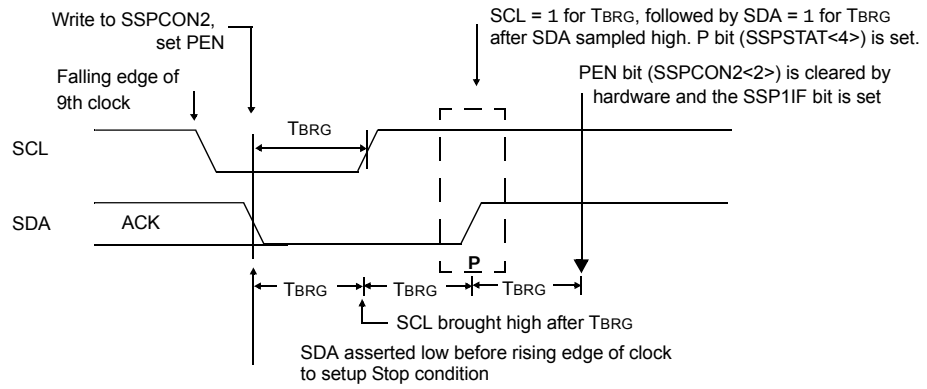

Note: TBRG = one Baud Rate Generator period.

26.6.10 SLEEP OPERATION

While in Sleep mode, the I^{2}C slave module can receive addresses or data and when an address match or complete byte transfer occurs, wake the processor from Sleep (if the MSSP interrupt is enabled).

26.6.11 EFFECTS OF A RESET

A Reset disables the MSSP module and terminates the current transfer.

26.6.12 MULTI-MASTER MODE

In Multi-Master mode, the interrupt generation on the detection of the Start and Stop conditions allows the determination of when the bus is free. The Stop (P) and Start (S) bits are cleared from a Reset or when the MSSP module is disabled. Control of the I^{2}C bus may be taken when the P bit of the SSPSTAT register is set, or the bus is Idle, with both the S and P bits clear. When the bus is busy, enabling the SSP interrupt will generate the interrupt when the Stop condition occurs.

In multi-master operation, the SDA line must be monitored for arbitration to see if the signal level is the expected output level. This check is performed by hardware with the result placed in the BCL1IF bit.

The states where arbitration can be lost are:

- Address Transfer
- Data Transfer
- A Start Condition
- A Repeated Start Condition
- An Acknowledge Condition

26.6.13 MULTI -MASTER COMMUNICATION, BUS COLLISION AND BUS ARBITRATION

Multi-Master mode support is achieved by bus arbitration. When the master outputs address/data bits onto the SDA pin, arbitration takes place when the master outputs a ‘1’ on SDA, by letting SDA float high and another master asserts a ‘0’. When the SCL pin floats high, data should be stable. If the expected data on SDA is a ‘1’ and the data sampled on the SDA pin is ‘0’, then a bus collision has taken place. The master will set the Bus Collision Interrupt Flag, BCL1IF and reset the I^{2}C port to its Idle state (Figure 26-31).

If a transmit was in progress when the bus collision occurred, the transmission is halted, the BF flag is cleared, the SDA and SCL lines are deasserted and the SSPBUF can be written to. When the user services the bus collision Interrupt Service Routine and if the I^{2}C bus is free, the user can resume communication by asserting a Start condition.

If a Start, Repeated Start, Stop or Acknowledge condition was in progress when the bus collision occurred, the condition is aborted, the SDA and SCL lines are deasserted and the respective control bits in the SSPCON2 register are cleared. When the user services the bus collision Interrupt Service Routine and if the I^{2}C bus is free, the user can resume communication by asserting a Start condition.

The master will continue to monitor the SDA and SCL pins. If a Stop condition occurs, the SSP1IF bit will be set.

A write to the SSPBUF will start the transmission of data at the first data bit, regardless of where the transmitter left off when the bus collision occurred.

In Multi-Master mode, the interrupt generation on the detection of Start and Stop conditions allows the determination of when the bus is free. Control of the I^{2}C bus can be taken when the P bit is set in the SSPSTAT register, or the bus is Idle and the S and P bits are cleared.

FIGURE 26-32: BUS COLLISION TIMING FOR TRANSMIT AND ACKNOWLEDGE

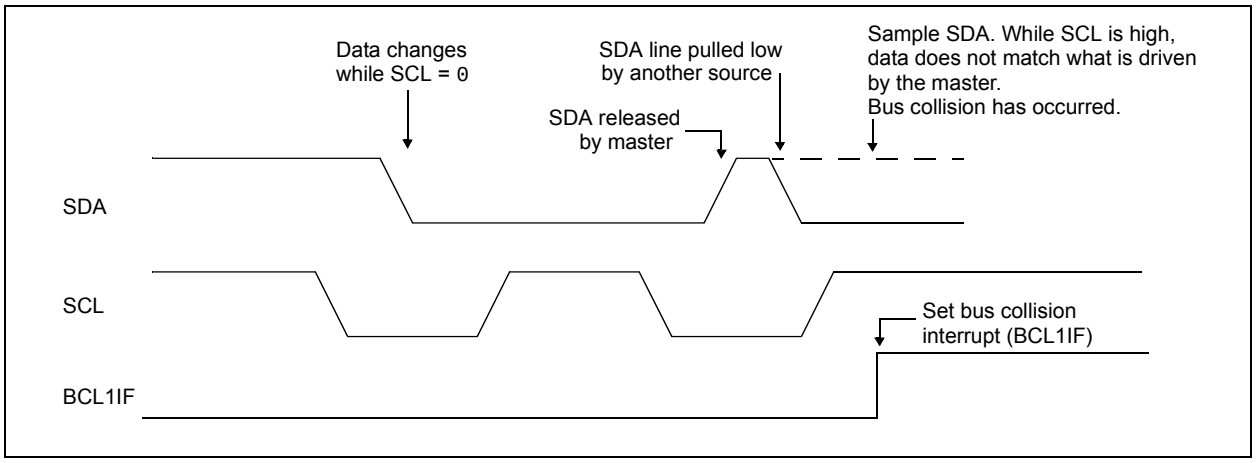

© 2012-2014 Microchip Technology Inc.

26.6.13.1 Bus Collision During a Start Condition

During a Start condition, a bus collision occurs if:

a) SDA or SCL are sampled low at the beginning of the Start condition (Figure 26-32).

b) SCL is sampled low before SDA is asserted low (Figure 26-33).

During a Start condition, both the SDA and the SCL pins are monitored.

If the SDA pin is already low, or the SCL pin is already low, then all of the following occur:

- the Start condition is aborted,
- the BCL1IF flag is set and
- the MSSP module is reset to its Idle state (Figure 26-32).

The Start condition begins with the SDA and SCL pins deasserted. When the SDA pin is sampled high, the Baud Rate Generator is loaded and counts down. If the SCL pin is sampled low while SDA is high, a bus collision occurs because it is assumed that another master is attempting to drive a data '1' during the Start condition.

If the SDA pin is sampled low during this count, the BRG is reset and the SDA line is asserted early (Figure 26-34). If, however, a '1' is sampled on the SDA pin, the SDA pin is asserted low at the end of the BRG count. The Baud Rate Generator is then reloaded and counts down to zero; if the SCL pin is sampled as '0' during this time, a bus collision does not occur. At the end of the BRG count, the SCL pin is asserted low.

> **Note:** The reason that bus collision is not a factor during a Start condition is that no two bus masters can assert a Start condition at the exact same time. Therefore, one master will always assert SDA before the other. This condition does not cause a bus collision because the two masters must be allowed to arbitrate the first address following the Start condition. If the address is the same, arbitration must be allowed to continue into the data portion, Repeated Start or Stop conditions.

FIGURE 26-33: BUS COLLISION DURING START CONDITION (SDA ONLY)

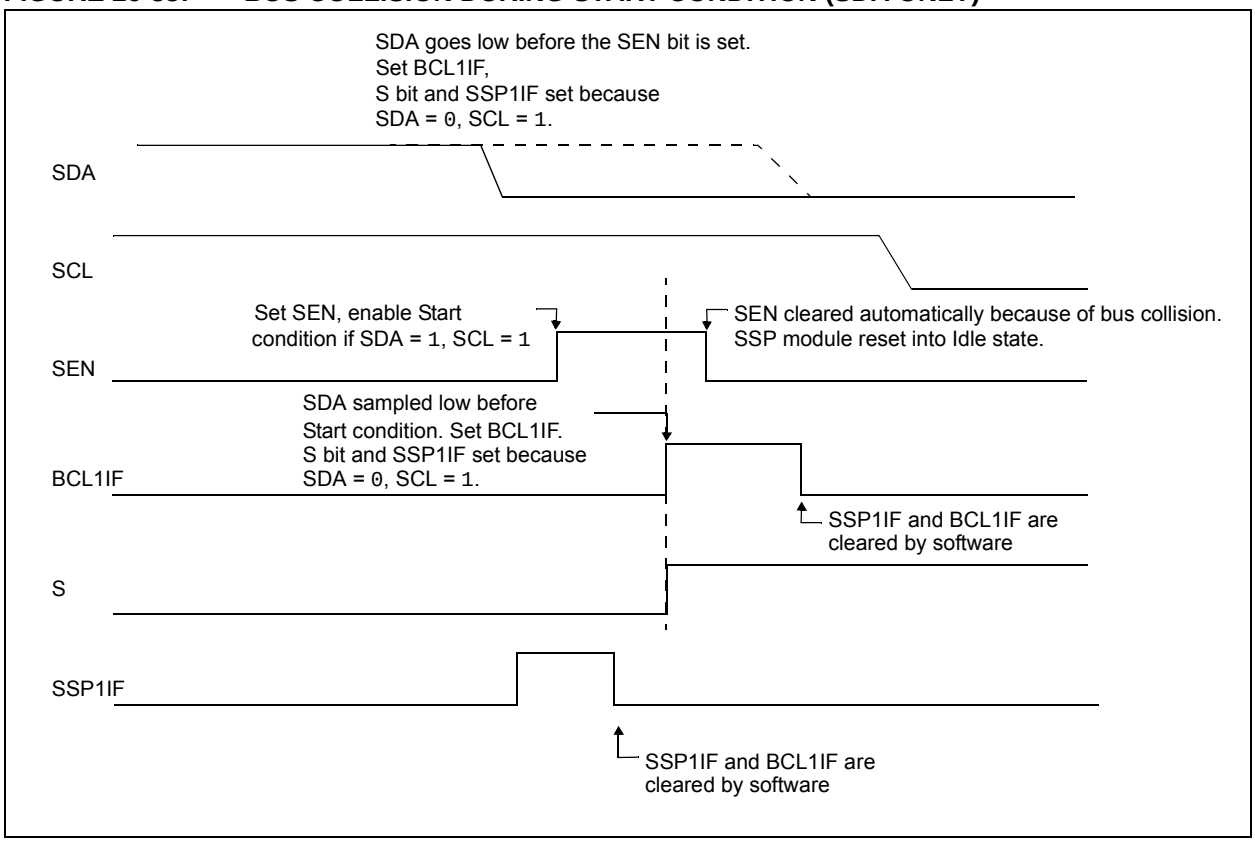

FIGURE 26-34: BUS COLLISION DURING START CONDITION (SCL = 0)

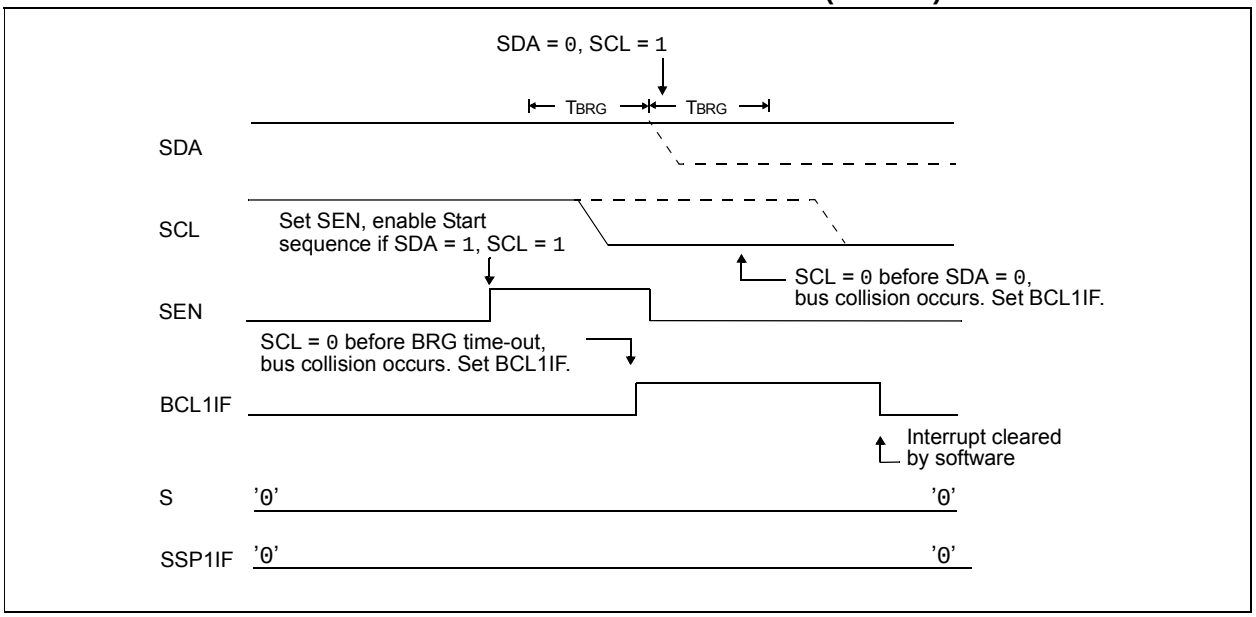

FIGURE 26-35: BRG RESET DUE TO SDA ARBITRATION DURING START CONDITION

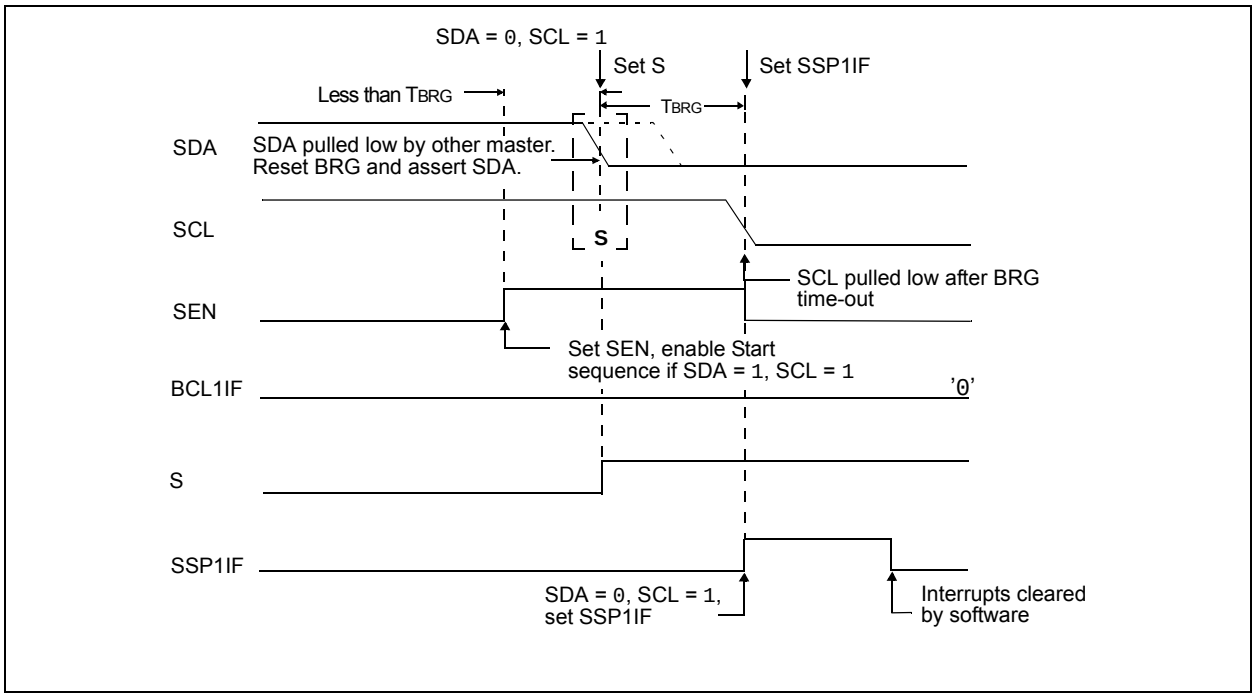

© 2012-2014 Microchip Technology Inc.

26.6.13.2 Bus Collision During a Repeated Start Condition

During a Repeated Start condition, a bus collision occurs if:

a) A low level is sampled on SDA when SCL goes from low level to high level.

b) SCL goes low before SDA is asserted low, indicating that another master is attempting to transmit a data '1'.

When the user releases SDA and the pin is allowed to float high, the BRG is loaded with SSPADD and counts down to zero. The SCL pin is then deasserted and when sampled high, the SDA pin is sampled.

If SDA is low, a bus collision has occurred (i.e., another master is attempting to transmit a data '0', Figure 26-35). If SDA is sampled high, the BRG is reloaded and begins counting. If SDA goes from high-to-low before the BRG times out, no bus collision occurs because no two masters can assert SDA at exactly the same time.

If SCL goes from high-to-low before the BRG times out and SDA has not already been asserted, a bus collision occurs. In this case, another master is attempting to transmit a data '1' during the Repeated Start condition, see Figure 26-36.

If, at the end of the BRG time-out, both SCL and SDA are still high, the SDA pin is driven low and the BRG is reloaded and begins counting. At the end of the count, regardless of the status of the SCL pin, the SCL pin is driven low and the Repeated Start condition is complete.

FIGURE 26-36: BUS COLLISION DURING A REPEATED START CONDITION (CASE 1)

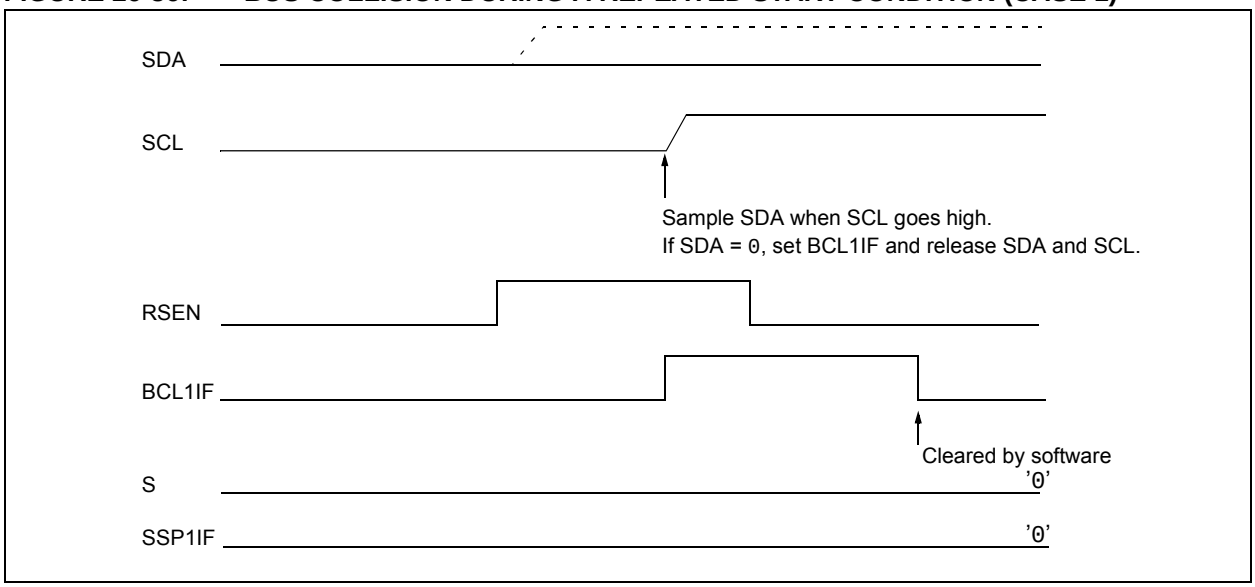

FIGURE 26-37: BUS COLLISION DURING REPEATED START CONDITION (CASE 2)

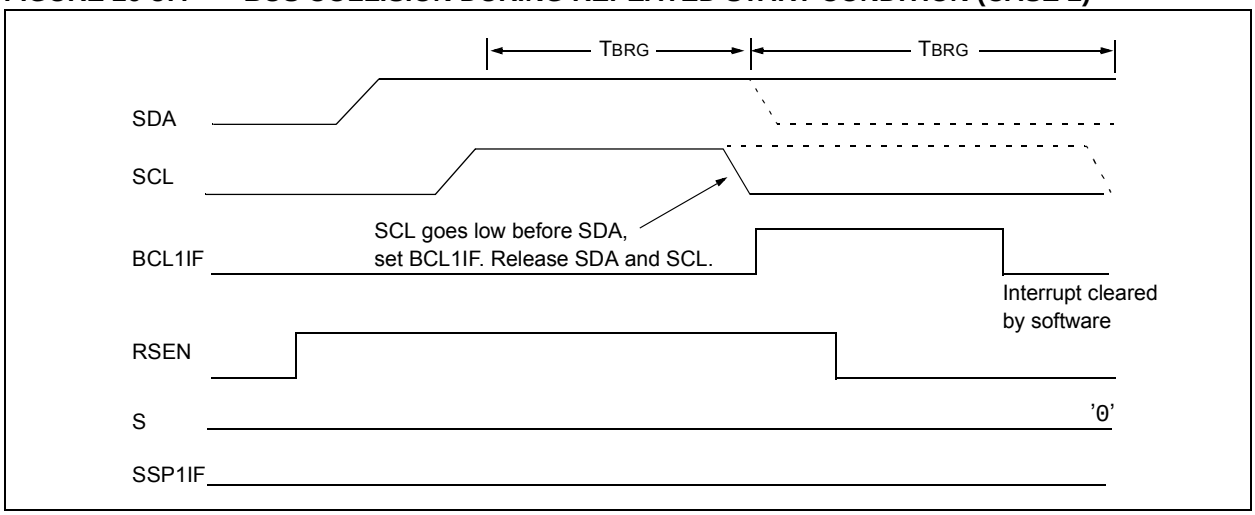

26.6.13.3 Bus Collision During a Stop Condition

Bus collision occurs during a Stop condition if:

a) After the SDA pin has been deasserted and allowed to float high, SDA is sampled low after the BRG has timed out.

b) After the SCL pin is deasserted, SCL is sampled low before SDA goes high.

The Stop condition begins with SDA asserted low. When SDA is sampled low, the SCL pin is allowed to float. When the pin is sampled high (clock arbitration), the Baud Rate Generator is loaded with SSPADD and counts down to 0. After the BRG times out, SDA is sampled. If SDA is sampled low, a bus collision has occurred. This is due to another master attempting to drive a data '0' (Figure 26-37). If the SCL pin is sampled low before SDA is allowed to float high, a bus collision occurs. This is another case of another master attempting to drive a data '0' (Figure 26-38).

FIGURE 26-38: BUS COLLISION DURING A STOP CONDITION (CASE 1)

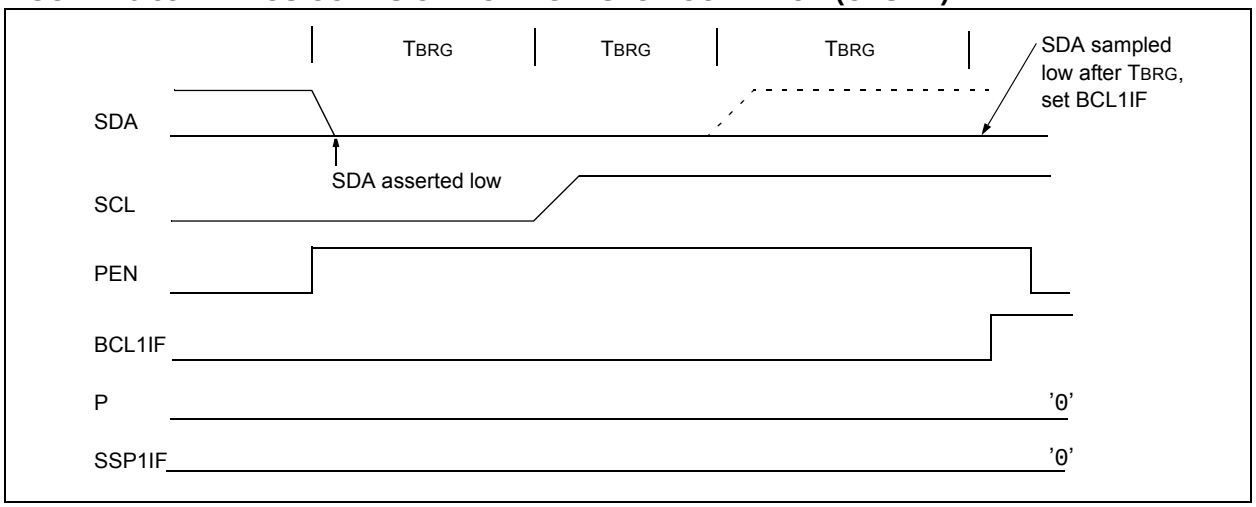

FIGURE 26-39: BUS COLLISION DURING A STOP CONDITION (CASE 2)

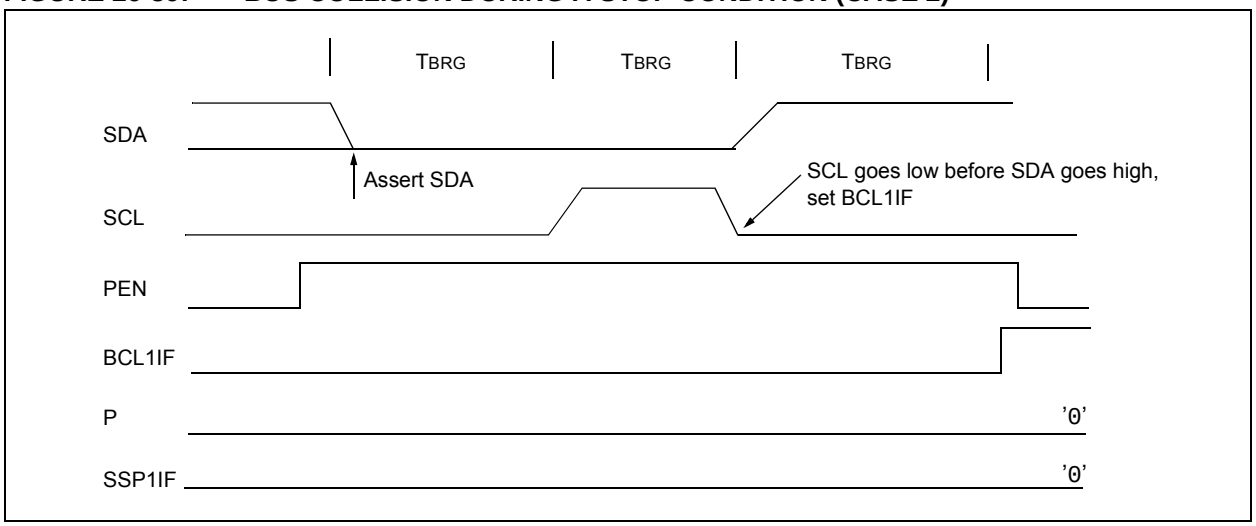

© 2012-2014 Microchip Technology Inc.

TABLE 26-3: SUMMARY OF REGISTERS ASSOCIATED WITH I²C™ OPERATION

Name	Bit 7	Bit 6	Bit 5	Bit 4	Bit 3	Bit 2	Bit 1	Bit 0	Reset Values on Page:
APFCON1	C2OUTSEL	CCP1SEL	SDOSEL	SCKSEL	SDISEL	TXSEL	RXSEL	CCP2SEL	127
INTCON	GIE	PEIE	TMR0IE	INTE	IOCIE	TMR0IF	INTF	IOCIF	93
PIE1	TMR1GIE	ADIE	RCIE	TXIE	SSP1IE	CCP1IE	TMR2IE	TMR1IE	94
PIE2	OSFIE	C2IE	C1IE	EEIE	BCL1IE	C4IE	C3IE	CCP2IE	95
PIR1	TMR1GIF	ADIF	RCIF	TXIF	SSP1IF	CCP1IF	TMR2IF	TMR1IF	98
PIR2	OSFIF	C2IF	C1IF	EEIF	BCL1IF	C4IF	C3IF	CCP2IF	99
SSP1ADD	ADD<7:0>								334
SSP1BUF	Synchronous Serial Port Receive Buffer/Transmit Register								285*
SSP1CON1	WCOL	SSPOV	SSPEN	CKP	SSPM<3:0>				331
SSP1CON2	GCEN	ACKSTAT	ACKDT	ACKEN	RCEN	PEN	RSEN	SEN	332
SSP1CON3	ACKTIM	PCIE	SCIE	BOEN	SDAHT	SBCDE	AHEN	DHEN	331
SSP1MSK	MSK<7:0>								334
SSP1STAT	SMP	CKE	D/$\overline{A}$	P	S	R/$\overline{W}$	UA	BF	329
TRISC	TRISC7	TRISC6	TRISC5	TRISC4	TRISC3	TRISC2	TRISC1	TRISA0	142

Legend: — = unimplemented location, read as '0'. Shaded cells are not used by the MSSP module in I²C™ mode.
* Page provides register information.

Note 1: PIC16(L)F1784/7 only.

26.7 BAUD RATE GENERATOR

The MSSP module has a Baud Rate Generator available for clock generation in both I^{2}C and SPI Master modes. The Baud Rate Generator (BRG) reload value is placed in the SSPADD register (Register 26-6). When a write occurs to SSPBUF, the Baud Rate Generator will automatically begin counting down.

Once the given operation is complete, the internal clock will automatically stop counting and the clock pin will remain in its last state.

An internal signal “Reload” in Figure 26-39 triggers the value from SSPADD to be loaded into the BRG counter. This occurs twice for each oscillation of the module clock line. The logic dictating when the reload signal is asserted depends on the mode the MSSP is being operated in.

Table 26-4 demonstrates clock rates based on instruction cycles and the BRG value loaded into SSPADD.

EQUATION 26-1:

$$F_{CLOCK} = \frac{F_{OSC}}{(SSPxADD + 1)(4)}$$

FIGURE 26-40: BAUD RATE GENERATOR BLOCK DIAGRAM

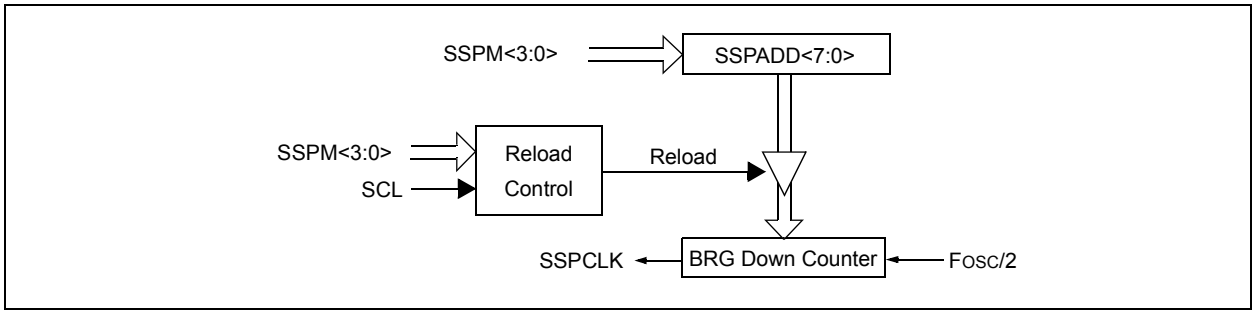

Note: Values of 0x00, 0x01 and 0x02 are not valid for SSPADD when used as a Baud Rate Generator for I^{2}C. This is an implementation limitation.

TABLE 26-4: MSSP CLOCK RATE W/BRG

FOSC	FCY	BRG Value	FCLOCK (2 Rollovers of BRG)
32 MHz	8 MHz	13h	400 kHz(1)
32 MHz	8 MHz	19h	308 kHz
32 MHz	8 MHz	4Fh	100 kHz
16 MHz	4 MHz	09h	400 kHz(1)
16 MHz	4 MHz	0Ch	308 kHz
16 MHz	4 MHz	27h	100 kHz
4 MHz	1 MHz	09h	100 kHz

Note 1: The I^{2}C interface does not conform to the 400 kHz I^{2}C specification (which applies to rates greater than 100 kHz) in all details, but may be used with care where higher rates are required by the application.

© 2012-2014 Microchip Technology Inc.

26.8 Register Definitions: MSSP Control

REGISTER 26-1: SSPSTAT: SSP STATUS REGISTER

R/W-0/0	R/W-0/0	R-0/0	R-0/0	R-0/0	R-0/0	R-0/0	R-0/0
SMP	CKE	D/$\overline{A}$	P	S	R/$\overline{W}$	UA	BF
bit 7							bit 0

Legend:		
R = Readable bit	W = Writable bit	U = Unimplemented bit, read as ‘0’
u = Bit is unchanged	x = Bit is unknown	-n/n = Value at POR and BOR/Value at all other Resets
‘1’ = Bit is set	‘0’ = Bit is cleared	

bit 7 **SMP:** SPI Data Input Sample bit

SPI Master mode:
1 = Input data sampled at end of data output time
0 = Input data sampled at middle of data output time

SPI Slave mode:
SMP must be cleared when SPI is used in Slave mode

In I^2C Master or Slave mode:
1 = Slew rate control disabled for standard speed mode (100 kHz and 1 MHz)
0 = Slew rate control enabled for high speed mode (400 kHz)

bit 6 **CKE:** SPI Clock Edge Select bit (SPI mode only)

In SPI Master or Slave mode:
1 = Transmit occurs on transition from active to Idle clock state
0 = Transmit occurs on transition from Idle to active clock state

In I^2C™ mode only:
1 = Enable input logic so that thresholds are compliant with SMBus specification
0 = Disable SMBus specific inputs

bit 5 **D/$\overline{A}$:** Data/$\overline{Address}$ bit (I^2C mode only)
1 = Indicates that the last byte received or transmitted was data
0 = Indicates that the last byte received or transmitted was address

bit 4 **P:** Stop bit
(I^2C mode only. This bit is cleared when the MSSP module is disabled, SSPEN is cleared.)
1 = Indicates that a Stop bit has been detected last (this bit is ‘0’ on Reset)
0 = Stop bit was not detected last

bit 3 **S:** Start bit
(I^2C mode only. This bit is cleared when the MSSP module is disabled, SSPEN is cleared.)
1 = Indicates that a Start bit has been detected last (this bit is ‘0’ on Reset)
0 = Start bit was not detected last

bit 2 **R/$\overline{W}$:** Read/$\overline{Write}$ bit information (I^2C mode only)
This bit holds the R/$\overline{W}$ bit information following the last address match. This bit is only valid from the address match to the next Start bit, Stop bit, or not $\overline{ACK}$ bit.

In I^2C Slave mode:
1 = Read
0 = Write

In I^2C Master mode:
1 = Transmit is in progress
0 = Transmit is not in progress
OR-ing this bit with SEN, RSEN, PEN, RCEN or ACKEN will indicate if the MSSP is in Idle mode.

bit 1 **UA:** Update Address bit (10-bit I^2C mode only)
1 = Indicates that the user needs to update the address in the SSPADD register
0 = Address does not need to be updated

REGISTER 26-1: SSPSTAT: SSP STATUS REGISTER (CONTINUED)

bit 0 **BF:** Buffer Full Status bit

Receive (SPI and I^2C modes):
`1` = Receive complete, SSPBUF is full
`0` = Receive not complete, SSPBUF is empty

Transmit (I^2C mode only):
`1` = Data transmit in progress (does not include the $\overline{ACK}$ and Stop bits), SSPBUF is full
`0` = Data transmit complete (does not include the $\overline{ACK}$ and Stop bits), SSPBUF is empty

© 2012-2014 Microchip Technology Inc.

REGISTER 26-2: SSPCON1: SSP CONTROL REGISTER 1

R/C/HS-0/0	R/C/HS-0/0	R/W-0/0	R/W-0/0	R/W-0/0	R/W-0/0	R/W-0/0	R/W-0/0
WCOL	SSPOV	SSPEN	CKP	SSPM<3:0>			
bit 7							bit 0

Legend:			
R = Readable bit	W = Writable bit	U = Unimplemented bit, read as ‘0’	
u = Bit is unchanged	x = Bit is unknown	-n/n = Value at POR and BOR/Value at all other Resets	
‘1’ = Bit is set	‘0’ = Bit is cleared	HS = Bit is set by hardware	C = User cleared

bit 7 **WCOL:** Write Collision Detect bit
Master mode:
1 = A write to the SSPBUF register was attempted while the I^2C conditions were not valid for a transmission to be started
0 = No collision
Slave mode:
1 = The SSPBUF register is written while it is still transmitting the previous word (must be cleared in software)
0 = No collision

bit 6 **SSPOV:** Receive Overflow Indicator bit(1)
In SPI mode:
1 = A new byte is received while the SSPBUF register is still holding the previous data. In case of overflow, the data in SSPSR is lost. Overflow can only occur in Slave mode. In Slave mode, the user must read the SSPBUF, even if only transmitting data, to avoid setting overflow. In Master mode, the overflow bit is not set since each new reception (and transmission) is initiated by writing to the SSPBUF register (must be cleared in software).
0 = No overflow
In I^2C mode:
1 = A byte is received while the SSPBUF register is still holding the previous byte. SSPOV is a “don’t care” in Transmit mode (must be cleared in software).
0 = No overflow

bit 5 **SSPEN:** Synchronous Serial Port Enable bit
In both modes, when enabled, these pins must be properly configured as input or output
In SPI mode:
1 = Enables serial port and configures SCK, SDO, SDI and $\overline{SS}$ as the source of the serial port pins(2)
0 = Disables serial port and configures these pins as I/O port pins
In I^2C mode:
1 = Enables the serial port and configures the SDA and SCL pins as the source of the serial port pins(3)
0 = Disables serial port and configures these pins as I/O port pins

bit 4 **CKP:** Clock Polarity Select bit
In SPI mode:
1 = Idle state for clock is a high level
0 = Idle state for clock is a low level
In I^2C Slave mode:
SCL release control
1 = Enable clock
0 = Holds clock low (clock stretch). (Used to ensure data setup time.)
In I^2C Master mode:
Unused in this mode

bit 3-0 **SSPM<3:0>:** Synchronous Serial Port Mode Select bits
0000 = SPI Master mode, clock = FOSC/4
0001 = SPI Master mode, clock = FOSC/16
0010 = SPI Master mode, clock = FOSC/64
0011 = SPI Master mode, clock = TMR2 output/2
0100 = SPI Slave mode, clock = SCK pin, $\overline{SS}$ pin control enabled
0101 = SPI Slave mode, clock = SCK pin, $\overline{SS}$ pin control disabled, $\overline{SS}$ can be used as I/O pin
0110 = I^2C Slave mode, 7-bit address
0111 = I^2C Slave mode, 10-bit address
1000 = I^2C Master mode, clock = FOSC / (4 * (SSPADD+1))(4)
1001 = Reserved
1010 = SPI Master mode, clock = FOSC/(4 * (SSPADD+1))(5)
1011 = I^2C firmware controlled Master mode (Slave idle)
1100 = Reserved
1101 = Reserved
1110 = I^2C Slave mode, 7-bit address with Start and Stop bit interrupts enabled
1111 = I^2C Slave mode, 10-bit address with Start and Stop bit interrupts enabled

Note 1: In Master mode, the overflow bit is not set since each new reception (and transmission) is initiated by writing to the SSPBUF register.
2: When enabled, these pins must be properly configured as input or output.
3: When enabled, the SDA and SCL pins must be configured as inputs.
4: SSPADD values of 0, 1 or 2 are not supported for I^2C mode.
5: SSPADD value of ‘0’ is not supported. Use SSPM = 0000 instead.

REGISTER 26-3: SSPCON2: SSP CONTROL REGISTER 2

R/W-0/0	R-0/0	R/W-0/0	R/S/HS-0/0	R/S/HS-0/0	R/S/HS-0/0	R/S/HS-0/0	R/W/HS-0/0
GCEN	ACKSTAT	ACKDT	ACKEN	RCEN	PEN	RSEN	SEN
bit 7							bit 0

Legend:		
R = Readable bit	W = Writable bit	U = Unimplemented bit, read as ‘0’
u = Bit is unchanged	x = Bit is unknown	-n/n = Value at POR and BOR/Value at all other Resets
‘1’ = Bit is set	‘0’ = Bit is cleared	HC = Cleared by hardware S = User set

bit 7 **GCEN:** General Call Enable bit (in I^2C Slave mode only)
1 = Enable interrupt when a general call address (0x00 or 00h) is received in the SSPSR
0 = General call address disabled

bit 6 **ACKSTAT:** Acknowledge Status bit (in I^2C mode only)
1 = Acknowledge was not received
0 = Acknowledge was received

bit 5 **ACKDT:** Acknowledge Data bit (in I^2C mode only)
In Receive mode:
Value transmitted when the user initiates an Acknowledge sequence at the end of a receive
1 = Not Acknowledge
0 = Acknowledge

bit 4 **ACKEN:** Acknowledge Sequence Enable bit (in I^2C Master mode only)
In Master Receive mode:
1 = Initiate Acknowledge sequence on SDA and SCL pins, and transmit ACKDT data bit. Automatically cleared by hardware.
0 = Acknowledge sequence idle

bit 3 **RCEN:** Receive Enable bit (in I^2C Master mode only)
1 = Enables Receive mode for I^2C
0 = Receive idle

bit 2 **PEN:** Stop Condition Enable bit (in I^2C Master mode only)
SCKMSSP Release Control:
1 = Initiate Stop condition on SDA and SCL pins. Automatically cleared by hardware.
0 = Stop condition Idle

bit 1 **RSEN:** Repeated Start Condition Enable bit (in I^2C Master mode only)
1 = Initiate Repeated Start condition on SDA and SCL pins. Automatically cleared by hardware.
0 = Repeated Start condition Idle

bit 0 **SEN:** Start Condition Enable/Stretch Enable bit
In Master mode:
1 = Initiate Start condition on SDA and SCL pins. Automatically cleared by hardware.
0 = Start condition Idle
In Slave mode:
1 = Clock stretching is enabled for both slave transmit and slave receive (stretch enabled)
0 = Clock stretching is disabled

Note 1: For bits ACKEN, RCEN, PEN, RSEN, SEN: If the I^2C module is not in the Idle mode, this bit may not be set (no spooling) and the SSPBUF may not be written (or writes to the SSPBUF are disabled).

© 2012-2014 Microchip Technology Inc.

REGISTER 26-4: SSPCON3: SSP CONTROL REGISTER 3

R-0/0	R/W-0/0	R/W-0/0	R/W-0/0	R/W-0/0	R/W-0/0	R/W-0/0	R/W-0/0
ACKTIM	PCIE	SCIE	BOEN	SDAHT	SBCDE	AHEN	DHEN
bit 7							bit 0

Legend:		
R = Readable bit	W = Writable bit	U = Unimplemented bit, read as ‘0’
u = Bit is unchanged	x = Bit is unknown	-n/n = Value at POR and BOR/Value at all other Resets
‘1’ = Bit is set	‘0’ = Bit is cleared	

bit 7 **ACKTIM:** Acknowledge Time Status bit (I^2C mode only)(3)
`1` = Indicates the I^2C bus is in an Acknowledge sequence, set on 8TH falling edge of SCL clock
`0` = Not an Acknowledge sequence, cleared on 9TH rising edge of SCL clock

bit 6 **PCIE**: Stop Condition Interrupt Enable bit (I^2C mode only)
`1` = Enable interrupt on detection of Stop condition
`0` = Stop detection interrupts are disabled(2)

bit 5 **SCIE**: Start Condition Interrupt Enable bit (I^2C mode only)
`1` = Enable interrupt on detection of Start or Restart conditions
`0` = Start detection interrupts are disabled(2)

bit 4 **BOEN:** Buffer Overwrite Enable bit
In SPI Slave mode:(1)
`1` = SSPBUF updates every time that a new data byte is shifted in ignoring the BF bit
`0` = If new byte is received with BF bit of the SSPSTAT register already set, SSPOV bit of the SSPCON1 register is set, and the buffer is not updated
In I^2C Master mode and SPI Master mode:
This bit is ignored.
In I^2C Slave mode:
`1` = SSPBUF is updated and $\overline{ACK}$ is generated for a received address/data byte, ignoring the state of the SSPOV bit only if the BF bit = `0`.
`0` = SSPBUF is only updated when SSPOV is clear

bit 3 **SDAHT:** SDA Hold Time Selection bit (I^2C mode only)
`1` = Minimum of 300 ns hold time on SDA after the falling edge of SCL
`0` = Minimum of 100 ns hold time on SDA after the falling edge of SCL

bit 2 **SBCDE:** Slave Mode Bus Collision Detect Enable bit (I^2C Slave mode only)
If on the rising edge of SCL, SDA is sampled low when the module is outputting a high state, the BCL1IF bit of the PIR2 register is set, and bus goes idle
`1` = Enable slave bus collision interrupts
`0` = Slave bus collision interrupts are disabled

bit 1 **AHEN:** Address Hold Enable bit (I^2C Slave mode only)
`1` = Following the 8th falling edge of SCL for a matching received address byte; CKP bit of the SSPCON1 register will be cleared and the SCL will be held low.
`0` = Address holding is disabled

bit 0 **DHEN:** Data Hold Enable bit (I^2C Slave mode only)
`1` = Following the 8th falling edge of SCL for a received data byte; slave hardware clears the CKP bit of the SSPCON1 register and SCL is held low.
`0` = Data holding is disabled

Note 1: For daisy-chained SPI operation; allows the user to ignore all but the last received byte. SSPOV is still set when a new byte is received and BF = `1`, but hardware continues to write the most recent byte to SSPBUF.
2: This bit has no effect in Slave modes that Start and Stop condition detection is explicitly listed as enabled.
3: The ACKTIM Status bit is only active when the AHEN bit or DHEN bit is set.

REGISTER 26-5: SSPMSK: SSP MASK REGISTER

R/W-1/1	R/W-1/1	R/W-1/1	R/W-1/1	R/W-1/1	R/W-1/1	R/W-1/1	R/W-1/1
MSK<7:0>							
bit 7							bit 0

Legend:		
R = Readable bit	W = Writable bit	U = Unimplemented bit, read as ‘0’
u = Bit is unchanged	x = Bit is unknown	-n/n = Value at POR and BOR/Value at all other Resets
‘1’ = Bit is set	‘0’ = Bit is cleared	

bit 7-1 **MSK<7:1>:** Mask bits
`1` = The received address bit n is compared to SSPADD<n> to detect I^2C address match
`0` = The received address bit n is not used to detect I^2C address match

bit 0 **MSK<0>:** Mask bit for I^2C Slave mode, 10-bit Address
I^2C Slave mode, 10-bit address (SSPM<3:0> = `0111` or `1111`):
`1` = The received address bit 0 is compared to SSPADD<0> to detect I^2C address match
`0` = The received address bit 0 is not used to detect I^2C address match
I^2C Slave mode, 7-bit address, the bit is ignored

REGISTER 26-6: SSPADD: MSSP ADDRESS AND BAUD RATE REGISTER (I^2C MODE)

R/W-0/0	R/W-0/0	R/W-0/0	R/W-0/0	R/W-0/0	R/W-0/0	R/W-0/0	R/W-0/0
ADD<7:0>							
bit 7							bit 0

Legend:		
R = Readable bit	W = Writable bit	U = Unimplemented bit, read as ‘0’
u = Bit is unchanged	x = Bit is unknown	-n/n = Value at POR and BOR/Value at all other Resets
‘1’ = Bit is set	‘0’ = Bit is cleared	

Master mode:

bit 7-0 **ADD<7:0>:** Baud Rate Clock Divider bits
SCL pin clock period = ((ADD<7:0> + 1) *4)/FOSC

10-Bit Slave mode — Most Significant Address Byte:

bit 7-3 **Not used:** Unused for Most Significant Address byte. Bit state of this register is a “don’t care”. Bit pattern sent by master is fixed by I^2C specification and must be equal to ‘`11110`’. However, those bits are compared by hardware and are not affected by the value in this register.

bit 2-1 **ADD<2:1>:** Two Most Significant bits of 10-bit address

bit 0 **Not used:** Unused in this mode. Bit state is a “don’t care”.

10-Bit Slave mode — Least Significant Address Byte:

bit 7-0 **ADD<7:0>:** Eight Least Significant bits of 10-bit address

7-Bit Slave mode:

bit 7-1 **ADD<7:1>:** 7-bit address

bit 0 **Not used:** Unused in this mode. Bit state is a “don’t care”.

© 2012-2014 Microchip Technology Inc.

27.0 ENHANCED UNIVERSAL SYNCHRONOUS ASYNCHRONOUS RECEIVER TRANSMITTER (EUSART)

The Enhanced Universal Synchronous Asynchronous Receiver Transmitter (EUSART) module is a serial I/O communications peripheral. It contains all the clock generators, shift registers and data buffers necessary to perform an input or output serial data transfer independent of device program execution. The EUSART, also known as a Serial Communications Interface (SCI), can be configured as a full-duplex asynchronous system or half-duplex synchronous system. Full-Duplex mode is useful for communications with peripheral systems, such as CRT terminals and personal computers. Half-Duplex Synchronous mode is intended for communications with peripheral devices, such as A/D or D/A integrated circuits, serial EEPROMs or other microcontrollers. These devices typically do not have internal clocks for baud rate generation and require the external clock signal provided by a master synchronous device.

The EUSART module includes the following capabilities:

- Full-duplex asynchronous transmit and receive
- Two-character input buffer
- One-character output buffer
- Programmable 8-bit or 9-bit character length
- Address detection in 9-bit mode
- Input buffer overrun error detection
- Received character framing error detection
- Half-duplex synchronous master
- Half-duplex synchronous slave
- Programmable clock polarity in synchronous modes
- Sleep operation

The EUSART module implements the following additional features, making it ideally suited for use in Local Interconnect Network (LIN) bus systems:

- Automatic detection and calibration of the baud rate
- Wake-up on Break reception
- 13-bit Break character transmit

Block diagrams of the EUSART transmitter and receiver are shown in Figure 27-1 and Figure 27-2.

FIGURE 27-1: EUSART TRANSMIT BLOCK DIAGRAM

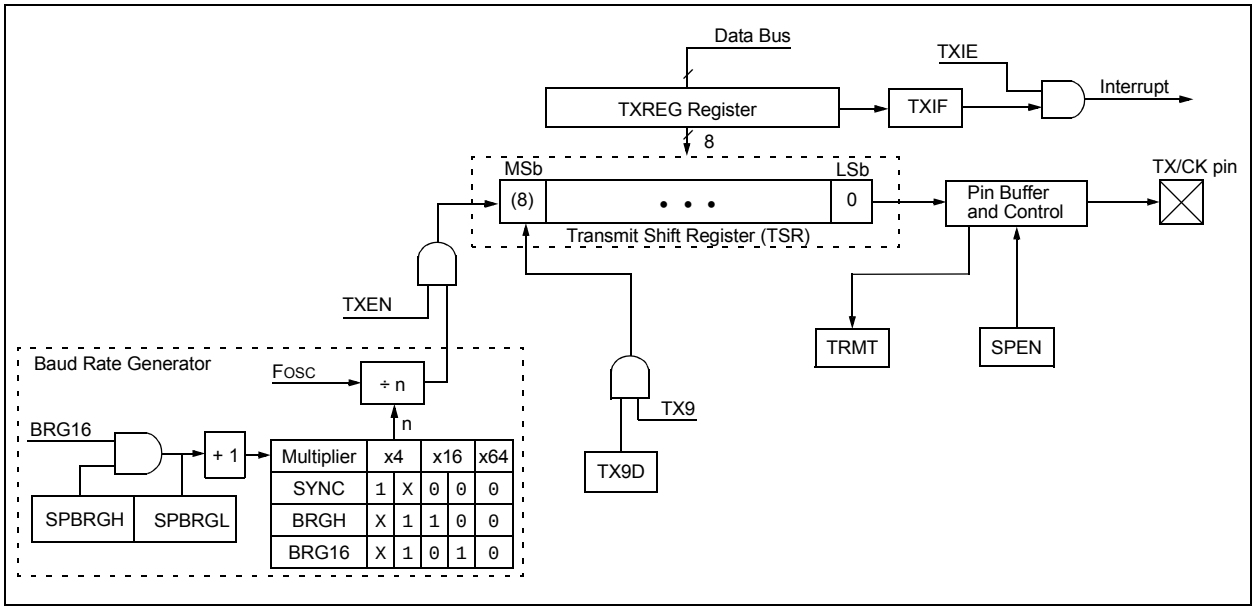

FIGURE 27-2: EUSART RECEIVE BLOCK DIAGRAM

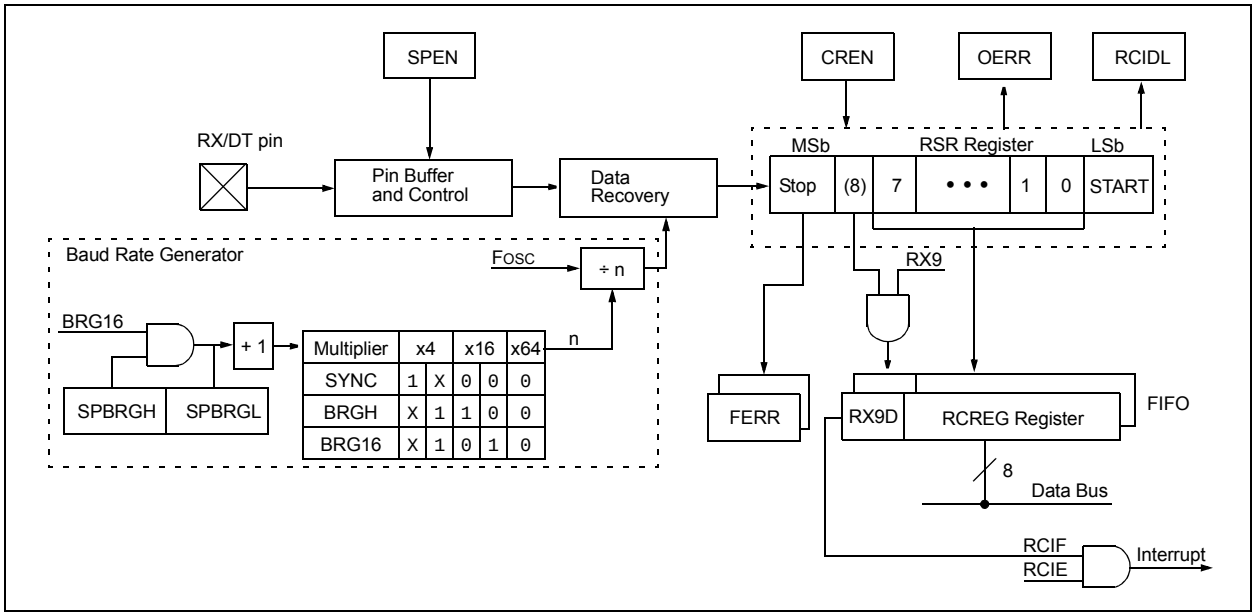

The operation of the EUSART module is controlled through three registers:

- Transmit Status and Control (TXSTA)
- Receive Status and Control (RCSTA)
- Baud Rate Control (BAUDCON)

These registers are detailed in Register 27-1, Register 27-2 and Register 27-3, respectively.

When the receiver or transmitter section is not enabled then the corresponding RX or TX pin may be used for general purpose input and output.

© 2012-2014 Microchip Technology Inc.

27.1 EUSART Asynchronous Mode

The EUSART transmits and receives data using the standard non-return-to-zero (NRZ) format. NRZ is implemented with two levels: a VOH mark state which represents a '1' data bit, and a VOL space state which represents a '0' data bit. NRZ refers to the fact that consecutively transmitted data bits of the same value stay at the output level of that bit without returning to a neutral level between each bit transmission. An NRZ transmission port idles in the Mark state. Each character transmission consists of one Start bit followed by eight or nine data bits and is always terminated by one or more Stop bits. The Start bit is always a space and the Stop bits are always marks. The most common data format is 8 bits. Each transmitted bit persists for a period of 1/(Baud Rate). An on-chip dedicated 8-bit/16-bit Baud Rate Generator is used to derive standard baud rate frequencies from the system oscillator. See Table 27-5 for examples of baud rate configurations.

The EUSART transmits and receives the LSb first. The EUSART's transmitter and receiver are functionally independent, but share the same data format and baud rate. Parity is not supported by the hardware, but can be implemented in software and stored as the ninth data bit.

27.1.1 EUSART ASYNCHRONOUS TRANSMITTER

The EUSART transmitter block diagram is shown in Figure 27-1. The heart of the transmitter is the serial Transmit Shift Register (TSR), which is not directly accessible by software. The TSR obtains its data from the transmit buffer, which is the TXREG register.

27.1.1.1 Enabling the Transmitter

The EUSART transmitter is enabled for asynchronous operations by configuring the following three control bits:

- TXEN = 1
- SYNC = 0
- SPEN = 1

All other EUSART control bits are assumed to be in their default state.

Setting the TXEN bit of the TXSTA register enables the transmitter circuitry of the EUSART. Clearing the SYNC bit of the TXSTA register configures the EUSART for asynchronous operation. Setting the SPEN bit of the RCSTA register enables the EUSART and automatically configures the TX/CK I/O pin as an output. If the TX/CK pin is shared with an analog peripheral, the analog I/O function must be disabled by clearing the corresponding ANSEL bit.

Note:	The TXIF Transmitter Interrupt flag is set when the TXEN enable bit is set.

27.1.1.2 Transmitting Data

A transmission is initiated by writing a character to the TXREG register. If this is the first character, or the previous character has been completely flushed from the TSR, the data in the TXREG is immediately transferred to the TSR register. If the TSR still contains all or part of a previous character, the new character data is held in the TXREG until the Stop bit of the previous character has been transmitted. The pending character in the TXREG is then transferred to the TSR in one TCY immediately following the Stop bit transmission. The transmission of the Start bit, data bits and Stop bit sequence commences immediately following the transfer of the data to the TSR from the TXREG.

27.1.1.3 Transmit Data Polarity

The polarity of the transmit data can be controlled with the SCKP bit of the BAUDxCON register. The default state of this bit is '0' which selects high true transmit idle and data bits. Setting the SCKP bit to '1' will invert the transmit data resulting in low true idle and data bits. The SCKP bit controls transmit data polarity in Asynchronous mode only. In Synchronous mode, the SCKP bit has a different function. See **Section 27.5.1.2 "Clock Polarity"**.

27.1.1.4 Transmit Interrupt Flag

The TXIF interrupt flag bit of the PIR1 register is set whenever the EUSART transmitter is enabled and no character is being held for transmission in the TXREG. In other words, the TXIF bit is only clear when the TSR is busy with a character and a new character has been queued for transmission in the TXREG. The TXIF flag bit is not cleared immediately upon writing TXREG. TXIF becomes valid in the second instruction cycle following the write execution. Polling TXIF immediately following the TXREG write will return invalid results. The TXIF bit is read-only, it cannot be set or cleared by software.

The TXIF interrupt can be enabled by setting the TXIE interrupt enable bit of the PIE1 register. However, the TXIF flag bit will be set whenever the TXREG is empty, regardless of the state of TXIE enable bit.

To use interrupts when transmitting data, set the TXIE bit only when there is more data to send. Clear the TXIE interrupt enable bit upon writing the last character of the transmission to the TXREG.

27.1.1.5 TSR Status

The TRMT bit of the TXSTA register indicates the status of the TSR register. This is a read-only bit. The TRMT bit is set when the TSR register is empty and is cleared when a character is transferred to the TSR register from the TXREG. The TRMT bit remains clear until all bits have been shifted out of the TSR register. No interrupt logic is tied to this bit, so the user has to poll this bit to determine the TSR status.

Note:	The TSR register is not mapped in data memory, so it is not available to the user.

27.1.1.6 Transmitting 9-Bit Characters

The EUSART supports 9-bit character transmissions. When the TX9 bit of the TXSTA register is set, the EUSART will shift nine bits out for each character transmitted. The TX9D bit of the TXSTA register is the ninth, and Most Significant, data bit. When transmitting 9-bit data, the TX9D data bit must be written before writing the eight Least Significant bits into the TXREG. All nine bits of data will be transferred to the TSR shift register immediately after the TXREG is written.

A special 9-bit Address mode is available for use with multiple receivers. See **Section 27.1.2.7 "Address Detection"** for more information on the address mode.

27.1.1.7 Asynchronous Transmission Set-up:

1. Initialize the SPBRGH, SPBRGL register pair and the BRGH and BRG16 bits to achieve the desired baud rate (see **Section 27.4 "EUSART Baud Rate Generator (BRG)"**).
2. Enable the asynchronous serial port by clearing the SYNC bit and setting the SPEN bit.
3. If 9-bit transmission is desired, set the TX9 control bit. A set ninth data bit will indicate that the eight Least Significant data bits are an address when the receiver is set for address detection.
4. Set SCKP bit if inverted transmit is desired.
5. Enable the transmission by setting the TXEN control bit. This will cause the TXIF interrupt bit to be set.
6. If interrupts are desired, set the TXIE interrupt enable bit of the PIE1 register. An interrupt will occur immediately provided that the GIE and PEIE bits of the INTCON register are also set.
7. If 9-bit transmission is selected, the ninth bit should be loaded into the TX9D data bit.
8. Load 8-bit data into the TXREG register. This will start the transmission.

FIGURE 27-3: ASYNCHRONOUS TRANSMISSION

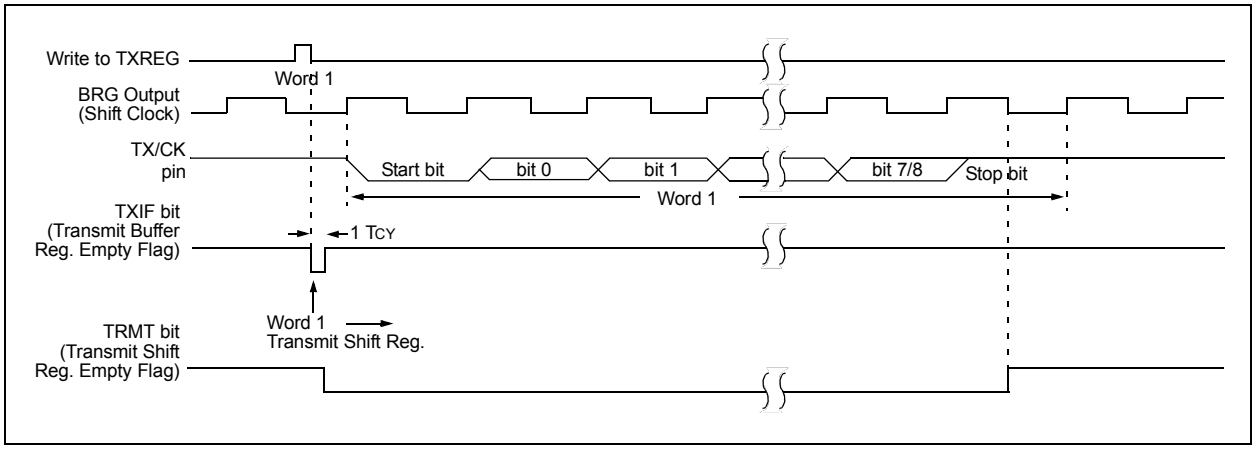

© 2012-2014 Microchip Technology Inc.

FIGURE 27-4: ASYNCHRONOUS TRANSMISSION (BACK-TO-BACK)

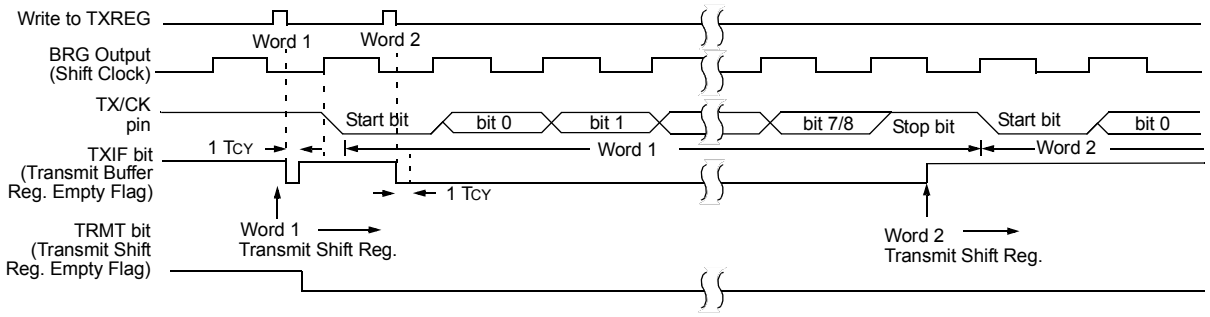

Note: This timing diagram shows two consecutive transmissions.

TABLE 27-1: SUMMARY OF REGISTERS ASSOCIATED WITH ASYNCHRONOUS TRANSMISSION

Name	Bit 7	Bit 6	Bit 5	Bit 4	Bit 3	Bit 2	Bit 1	Bit 0	Register on Page
APFCON1	C2OUTSEL	CC1PSEL	SDOSEL	SCKSEL	SDISEL	TXSEL	RXSEL	CCP2SEL	127
BAUDCON	ABDOVF	RCIDL	—	SCKP	BRG16	—	WUE	ABDEN	347
INTCON	GIE	PEIE	TMR0IE	INTE	IOCIE	TMR0IF	INTF	IOCIF	93
PIE1	TMR1GIE	ADIE	RCIE	TXIE	SSP1IE	CCP1IE	TMR2IE	TMR1IE	94
PIR1	TMR1GIF	ADIF	RCIF	TXIF	SSP1IF	CCP1IF	TMR2IF	TMR1IF	98
RCSTA	SPEN	RX9	SREN	CREN	ADDEN	FERR	OERR	RX9D	346
SPBRGL	BRG<7:0>								348
SPBRGH	BRG<15:8>								348
TRISC	TRISC7	TRISC6	TRISC5	TRISC4	TRISC3	TRISC2	TRISC1	TRISC0	142
TXREG	EUSART Transmit Data Register								337*
TXSTA	CSRC	TX9	TXEN	SYNC	SENDB	BRGH	TRMT	TX9D	345

Legend: — = unimplemented location, read as '0'. Shaded cells are not used for asynchronous transmission.
* Page provides register information.

27.1.2 EUSART ASYNCHRONOUS RECEIVER

The Asynchronous mode is typically used in RS-232 systems. The receiver block diagram is shown in Figure 27-2. The data is received on the RX/DT pin and drives the data recovery block. The data recovery block is actually a high-speed shifter operating at 16 times the baud rate, whereas the serial Receive Shift Register (RSR) operates at the bit rate. When all 8 or 9 bits of the character have been shifted in, they are immediately transferred to a two character First-In-First-Out (FIFO) memory. The FIFO buffering allows reception of two complete characters and the start of a third character before software must start servicing the EUSART receiver. The FIFO and RSR registers are not directly accessible by software. Access to the received data is via the RCREG register.

27.1.2.1 Enabling the Receiver

The EUSART receiver is enabled for asynchronous operation by configuring the following three control bits:

- CREN = 1
- SYNC = 0
- SPEN = 1

All other EUSART control bits are assumed to be in their default state.

Setting the CREN bit of the RCSTA register enables the receiver circuitry of the EUSART. Clearing the SYNC bit of the TXSTA register configures the EUSART for asynchronous operation. Setting the SPEN bit of the RCSTA register enables the EUSART. The programmer must set the corresponding TRIS bit to configure the RX/DT I/O pin as an input.

Note:	If the RX/DT function is on an analog pin, the corresponding ANSEL bit must be cleared for the receiver to function.

27.1.2.2 Receiving Data

The receiver data recovery circuit initiates character reception on the falling edge of the first bit. The first bit, also known as the Start bit, is always a zero. The data recovery circuit counts one-half bit time to the center of the Start bit and verifies that the bit is still a zero. If it is not a zero then the data recovery circuit aborts character reception, without generating an error, and resumes looking for the falling edge of the Start bit. If the Start bit zero verification succeeds then the data recovery circuit counts a full bit time to the center of the next bit. The bit is then sampled by a majority detect circuit and the resulting '0' or '1' is shifted into the RSR. This repeats until all data bits have been sampled and shifted into the RSR. One final bit time is measured and the level sampled. This is the Stop bit, which is always a '1'. If the data recovery circuit samples a '0' in the Stop bit position then a framing error is set for this character, otherwise the framing error is cleared for this character. See **Section 27.1.2.4 "Receive Framing Error"** for more information on framing errors.

Immediately after all data bits and the Stop bit have been received, the character in the RSR is transferred to the EUSART receive FIFO and the RCIF interrupt flag bit of the PIR1 register is set. The top character in the FIFO is transferred out of the FIFO by reading the RCREG register.

Note:	If the receive FIFO is overrun, no additional characters will be received until the overrun condition is cleared. See **Section 27.1.2.5 "Receive Overrun Error"** for more information on overrun errors.

27.1.2.3 Receive Interrupts

The RCIF interrupt flag bit of the PIR1 register is set whenever the EUSART receiver is enabled and there is an unread character in the receive FIFO. The RCIF interrupt flag bit is read-only, it cannot be set or cleared by software.

RCIF interrupts are enabled by setting all of the following bits:

- RCIE, Interrupt Enable bit of the PIE1 register
- PEIE, Peripheral Interrupt Enable bit of the INTCON register
- GIE, Global Interrupt Enable bit of the INTCON register

The RCIF interrupt flag bit will be set when there is an unread character in the FIFO, regardless of the state of interrupt enable bits.

© 2012-2014 Microchip Technology Inc.

27.1.2.4 Receive Framing Error

Each character in the receive FIFO buffer has a corresponding framing error Status bit. A framing error indicates that a Stop bit was not seen at the expected time. The framing error status is accessed via the FERR bit of the RCSTA register. The FERR bit represents the status of the top unread character in the receive FIFO. Therefore, the FERR bit must be read before reading the RCREG.

The FERR bit is read-only and only applies to the top unread character in the receive FIFO. A framing error (FERR = 1) does not preclude reception of additional characters. It is not necessary to clear the FERR bit. Reading the next character from the FIFO buffer will advance the FIFO to the next character and the next corresponding framing error.

The FERR bit can be forced clear by clearing the SPEN bit of the RCSTA register which resets the EUSART. Clearing the CREN bit of the RCSTA register does not affect the FERR bit. A framing error by itself does not generate an interrupt.

Note:	If all receive characters in the receive FIFO have framing errors, repeated reads of the RCREG will not clear the FERR bit.

27.1.2.5 Receive Overrun Error

The receive FIFO buffer can hold two characters. An overrun error will be generated if a third character, in its entirety, is received before the FIFO is accessed. When this happens the OERR bit of the RCSTA register is set. The characters already in the FIFO buffer can be read but no additional characters will be received until the error is cleared. The error must be cleared by either clearing the CREN bit of the RCSTA register or by resetting the EUSART by clearing the SPEN bit of the RCSTA register.

27.1.2.6 Receiving 9-bit Characters

The EUSART supports 9-bit character reception. When the RX9 bit of the RCSTA register is set the EUSART will shift 9 bits into the RSR for each character received. The RX9D bit of the RCSTA register is the ninth and Most Significant data bit of the top unread character in the receive FIFO. When reading 9-bit data from the receive FIFO buffer, the RX9D data bit must be read before reading the eight Least Significant bits from the RCREG.

27.1.2.7 Address Detection

A special Address Detection mode is available for use when multiple receivers share the same transmission line, such as in RS-485 systems. Address detection is enabled by setting the ADDEN bit of the RCSTA register.

Address detection requires 9-bit character reception. When address detection is enabled, only characters with the ninth data bit set will be transferred to the receive FIFO buffer, thereby setting the RCIF interrupt bit. All other characters will be ignored.

Upon receiving an address character, user software determines if the address matches its own. Upon address match, user software must disable address detection by clearing the ADDEN bit before the next Stop bit occurs. When user software detects the end of the message, determined by the message protocol used, software places the receiver back into the Address Detection mode by setting the ADDEN bit.

27.1.2.8 Asynchronous Reception Set-up:

1. Initialize the SPBRGH, SPBRGL register pair and the BRGH and BRG16 bits to achieve the desired baud rate (see **Section 27.4 "EUSART Baud Rate Generator (BRG)"**).
2. Clear the ANSEL bit for the RX pin (if applicable).
3. Enable the serial port by setting the SPEN bit. The SYNC bit must be clear for asynchronous operation.
4. If interrupts are desired, set the RCIE bit of the PIE1 register and the GIE and PEIE bits of the INTCON register.
5. If 9-bit reception is desired, set the RX9 bit.
6. Enable reception by setting the CREN bit.
7. The RCIF interrupt flag bit will be set when a character is transferred from the RSR to the receive buffer. An interrupt will be generated if the RCIE interrupt enable bit was also set.
8. Read the RCSTA register to get the error flags and, if 9-bit data reception is enabled, the ninth data bit.
9. Get the received eight Least Significant data bits from the receive buffer by reading the RCREG register.
10. If an overrun occurred, clear the OERR flag by clearing the CREN receiver enable bit.

27.1.2.9 9-bit Address Detection Mode Set-up

This mode would typically be used in RS-485 systems. To set up an Asynchronous Reception with Address Detect Enable:

1. Initialize the SPBRGH, SPBRGL register pair and the BRGH and BRG16 bits to achieve the desired baud rate (see **Section 27.4 "EUSART Baud Rate Generator (BRG)"**).
2. Clear the ANSEL bit for the RX pin (if applicable).
3. Enable the serial port by setting the SPEN bit. The SYNC bit must be clear for asynchronous operation.
4. If interrupts are desired, set the RCIE bit of the PIE1 register and the GIE and PEIE bits of the INTCON register.
5. Enable 9-bit reception by setting the RX9 bit.
6. Enable address detection by setting the ADDEN bit.
7. Enable reception by setting the CREN bit.
8. The RCIF interrupt flag bit will be set when a character with the ninth bit set is transferred from the RSR to the receive buffer. An interrupt will be generated if the RCIE interrupt enable bit was also set.
9. Read the RCSTA register to get the error flags. The ninth data bit will always be set.
10. Get the received eight Least Significant data bits from the receive buffer by reading the RCREG register. Software determines if this is the device's address.
11. If an overrun occurred, clear the OERR flag by clearing the CREN receiver enable bit.
12. If the device has been addressed, clear the ADDEN bit to allow all received data into the receive buffer and generate interrupts.

FIGURE 27-5: ASYNCHRONOUS RECEPTION

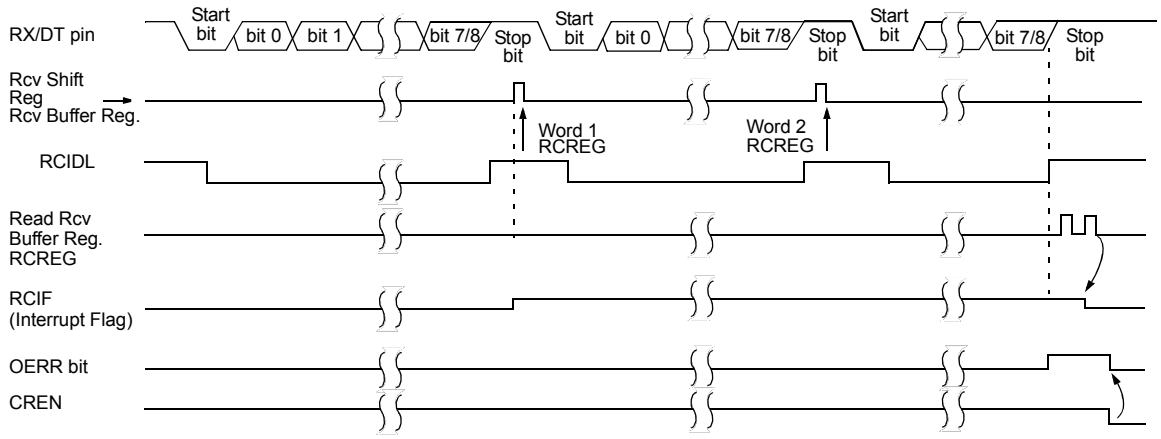

Note: This timing diagram shows three words appearing on the RX input. The RCREG (receive buffer) is read after the third word, causing the OERR (overrun) bit to be set.

© 2012-2014 Microchip Technology Inc.

TABLE 27-2: SUMMARY OF REGISTERS ASSOCIATED WITH ASYNCHRONOUS RECEPTION

Name	Bit 7	Bit 6	Bit 5	Bit 4	Bit 3	Bit 2	Bit 1	Bit 0	Register on Page
APFCON1	C2OUTSEL	CC1PSEL	SDOSEL	SCKSEL	SDISEL	TXSEL	RXSEL	CCP2SEL	127
BAUDCON	ABDOVF	RCIDL	—	SCKP	BRG16	—	WUE	ABDEN	347
INTCON	GIE	PEIE	TMR0IE	INTE	IOCIE	TMR0IF	INTF	IOCIF	93
PIE1	TMR1GIE	ADIE	RCIE	TXIE	SSP1IE	CCP1IE	TMR2IE	TMR1IE	94
PIR1	TMR1GIF	ADIF	RCIF	TXIF	SSP1IF	CCP1IF	TMR2IF	TMR1IF	98
RCREG	EUSART Receive Data Register								340*
RCSTA	SPEN	RX9	SREN	CREN	ADDEN	FERR	OERR	RX9D	346
SPBRGL	BRG<7:0>								348
SPBRGH	BRG<15:8>								348
TRISC	TRISC7	TRISC6	TRISC5	TRISC4	TRISC3	TRISC2	TRISC1	TRISC0	142
TXSTA	CSRC	TX9	TXEN	SYNC	SENDB	BRGH	TRMT	TX9D	345

Legend: — = unimplemented location, read as '0'. Shaded cells are not used for asynchronous reception.
* Page provides register information.

27.2 Clock Accuracy with Asynchronous Operation

The factory calibrates the internal oscillator block output (INTOSC). However, the INTOSC frequency may drift as VDD or temperature changes, and this directly affects the asynchronous baud rate. Two methods may be used to adjust the baud rate clock, but both require a reference clock source of some kind.

The first (preferred) method uses the OSCTUNE register to adjust the INTOSC output. Adjusting the value in the OSCTUNE register allows for fine resolution changes to the system clock source. See **Section 6.2.2 "Internal Clock Sources"** for more information.

The other method adjusts the value in the Baud Rate Generator. This can be done automatically with the Auto-Baud Detect feature (see **Section 27.4.1 "Auto-Baud Detect"**). There may not be fine enough resolution when adjusting the Baud Rate Generator to compensate for a gradual change in the peripheral clock frequency.

© 2012-2014 Microchip Technology Inc.

27.3 Register Definitions: EUSART Control

REGISTER 27-1: TXSTA: TRANSMIT STATUS AND CONTROL REGISTER

R/W-/0	R/W-0/0	R/W-0/0	R/W-0/0	R/W-0/0	R/W-0/0	R-1/1	R/W-0/0
CSRC	TX9	TXEN(1)	SYNC	SENDB	BRGH	TRMT	TX9D
bit 7							bit 0

Legend:		
R = Readable bit	W = Writable bit	U = Unimplemented bit, read as ‘0’
u = Bit is unchanged	x = Bit is unknown	-n/n = Value at POR and BOR/Value at all other Resets
‘1’ = Bit is set	‘0’ = Bit is cleared	

bit 7 **CSRC:** Clock Source Select bit
Asynchronous mode:
Don’t care
Synchronous mode:
1 = Master mode (clock generated internally from BRG)
0 = Slave mode (clock from external source)

bit 6 **TX9:** 9-bit Transmit Enable bit
1 = Selects 9-bit transmission
0 = Selects 8-bit transmission

bit 5 **TXEN:** Transmit Enable bit(1)
1 = Transmit enabled
0 = Transmit disabled

bit 4 **SYNC:** EUSART Mode Select bit
1 = Synchronous mode
0 = Asynchronous mode

bit 3 **SENDB:** Send Break Character bit
Asynchronous mode:
1 = Send Sync Break on next transmission (cleared by hardware upon completion)
0 = Sync Break transmission completed
Synchronous mode:
Don’t care

bit 2 **BRGH:** High Baud Rate Select bit
Asynchronous mode:
1 = High speed
0 = Low speed
Synchronous mode:
Unused in this mode

bit 1 **TRMT:** Transmit Shift Register Status bit
1 = TSR empty
0 = TSR full

bit 0 **TX9D:** Ninth bit of Transmit Data
Can be address/data bit or a parity bit.

Note 1: SREN/CREN overrides TXEN in Sync mode.

REGISTER 27-2: RCSTA: RECEIVE STATUS AND CONTROL REGISTER

R/W-0/0	R/W-0/0	R/W-0/0	R/W-0/0	R/W-0/0	R-0/0	R-0/0	R-0/0
SPEN	RX9	SREN	CREN	ADDEN	FERR	OERR	RX9D
bit 7							bit 0

Legend:		
R = Readable bit	W = Writable bit	U = Unimplemented bit, read as ‘0’
u = Bit is unchanged	x = Bit is unknown	-n/n = Value at POR and BOR/Value at all other Resets
‘1’ = Bit is set	‘0’ = Bit is cleared	

bit 7 **SPEN:** Serial Port Enable bit
1 = Serial port enabled (configures RX/DT and TX/CK pins as serial port pins)
0 = Serial port disabled (held in Reset)

bit 6 **RX9:** 9-bit Receive Enable bit
1 = Selects 9-bit reception
0 = Selects 8-bit reception

bit 5 **SREN:** Single Receive Enable bit
Asynchronous mode:
Don’t care
Synchronous mode – Master:
1 = Enables single receive
0 = Disables single receive
This bit is cleared after reception is complete.
Synchronous mode – Slave
Don’t care

bit 4 **CREN:** Continuous Receive Enable bit
Asynchronous mode:
1 = Enables receiver
0 = Disables receiver
Synchronous mode:
1 = Enables continuous receive until enable bit CREN is cleared (CREN overrides SREN)
0 = Disables continuous receive

bit 3 **ADDEN:** Address Detect Enable bit
Asynchronous mode 9-bit (RX9 = 1):
1 = Enables address detection, enable interrupt and load the receive buffer when RSR<8> is set
0 = Disables address detection, all bytes are received and ninth bit can be used as parity bit
Asynchronous mode 8-bit (RX9 = 0):
Don’t care

bit 2 **FERR:** Framing Error bit
1 = Framing error (can be updated by reading RCREG register and receive next valid byte)
0 = No framing error

bit 1 **OERR:** Overrun Error bit
1 = Overrun error (can be cleared by clearing bit CREN)
0 = No overrun error

bit 0 **RX9D:** Ninth bit of Received Data
This can be address/data bit or a parity bit and must be calculated by user firmware.

© 2012-2014 Microchip Technology Inc.

REGISTER 27-3: BAUDCON: BAUD RATE CONTROL REGISTER

R-0/0	R-1/1	U-0	R/W-0/0	R/W-0/0	U-0	R/W-0/0	R/W-0/0
ABDOVF	RCIDL	—	SCKP	BRG16	—	WUE	ABDEN
bit 7							bit 0

Legend:		
R = Readable bit	W = Writable bit	U = Unimplemented bit, read as ‘0’
u = Bit is unchanged	x = Bit is unknown	-n/n = Value at POR and BOR/Value at all other Resets
‘1’ = Bit is set	‘0’ = Bit is cleared	

bit 7 **ABDOVF:** Auto-Baud Detect Overflow bit
Asynchronous mode:
1 = Auto-baud timer overflowed
0 = Auto-baud timer did not overflow
Synchronous mode:
Don’t care

bit 6 **RCIDL**: Receive Idle Flag bit
Asynchronous mode:
1 = Receiver is idle
0 = Start bit has been received and the receiver is receiving
Synchronous mode:
Don’t care

bit 5 **Unimplemented:** Read as ‘0’

bit 4 **SCKP**: Synchronous Clock Polarity Select bit
Asynchronous mode:
1 = Transmit inverted data to the TX/CK pin
0 = Transmit non-inverted data to the TX/CK pin
Synchronous mode:
1 = Data is clocked on rising edge of the clock
0 = Data is clocked on falling edge of the clock

bit 3 **BRG16:** 16-bit Baud Rate Generator bit
1 = 16-bit Baud Rate Generator is used
0 = 8-bit Baud Rate Generator is used

bit 2 **Unimplemented:** Read as ‘0’

bit 1 **WUE:** Wake-up Enable bit
Asynchronous mode:
1 = Receiver is waiting for a falling edge. No character will be received, byte RCIF will be set. WUE will automatically clear after RCIF is set.
0 = Receiver is operating normally
Synchronous mode:
Don’t care

bit 0 **ABDEN**: Auto-Baud Detect Enable bit
Asynchronous mode:
1 = Auto-Baud Detect mode is enabled (clears when auto-baud is complete)
0 = Auto-Baud Detect mode is disabled
Synchronous mode:
Don’t care

27.4 EUSART Baud Rate Generator (BRG)

The Baud Rate Generator (BRG) is an 8-bit or 16-bit timer that is dedicated to the support of both the asynchronous and synchronous EUSART operation. By default, the BRG operates in 8-bit mode. Setting the BRG16 bit of the BAUDCON register selects 16-bit mode.

The SPBRGH, SPBRGL register pair determines the period of the free running baud rate timer. In Asynchronous mode the multiplier of the baud rate period is determined by both the BRGH bit of the TXSTA register and the BRG16 bit of the BAUDCON register. In Synchronous mode, the BRGH bit is ignored.

Table 27-3 contains the formulas for determining the baud rate. Example 27-1 provides a sample calculation for determining the baud rate and baud rate error.

Typical baud rates and error values for various asynchronous modes have been computed for your convenience and are shown in Table 27-3. It may be advantageous to use the high baud rate (BRGH = 1), or the 16-bit BRG (BRG16 = 1) to reduce the baud rate error. The 16-bit BRG mode is used to achieve slow baud rates for fast oscillator frequencies.

Writing a new value to the SPBRGH, SPBRGL register pair causes the BRG timer to be reset (or cleared). This ensures that the BRG does not wait for a timer overflow before outputting the new baud rate.

If the system clock is changed during an active receive operation, a receive error or data loss may result. To avoid this problem, check the status of the RCIDL bit to make sure that the receive operation is idle before changing the system clock.

EXAMPLE 27-1: CALCULATING BAUD RATE ERROR

For a device with FOSC of 16 MHz, desired baud rate of 9600, Asynchronous mode, 8-bit BRG:

$$\text{Desired Baud Rate} = \frac{FOSC}{64([SPBRGH:SPBRGL] + 1)}$$

Solving for SPBRGH:SPBRGL:

$$X = \frac{\frac{FOSC}{\text{Desired Baud Rate}}}{64} - 1$$

$$= \frac{\frac{16000000}{9600}}{64} - 1$$

$$= [25.042] = 25$$

$$\text{Calculated Baud Rate} = \frac{16000000}{64(25 + 1)}$$

$$= 9615$$

$$\text{Error} = \frac{\text{Calc. Baud Rate} - \text{Desired Baud Rate}}{\text{Desired Baud Rate}}$$

$$= \frac{(9615 - 9600)}{9600} = 0.16\%$$

© 2012-2014 Microchip Technology Inc.

TABLE 27-3: BAUD RATE FORMULAS

Configuration Bits			BRG/EUSART Mode	Baud Rate Formula
SYNC	BRG16	BRGH		
0	0	0	8-bit/Asynchronous	FOSC/[64 (n+1)]
0	0	1	8-bit/Asynchronous	FOSC/[16 (n+1)]
0	1	0	16-bit/Asynchronous	
0	1	1	16-bit/Asynchronous	FOSC/[4 (n+1)]
1	0	x	8-bit/Synchronous	
1	1	x	16-bit/Synchronous	

Legend: x = Don't care, n = value of SPBRGH, SPBRGL register pair

TABLE 27-4: SUMMARY OF REGISTERS ASSOCIATED WITH THE BAUD RATE GENERATOR

Name	Bit 7	Bit 6	Bit 5	Bit 4	Bit 3	Bit 2	Bit 1	Bit 0	Register on Page
BAUDCON	ABDOVF	RCIDL	—	SCKP	BRG16	—	WUE	ABDEN	347
RCSTA	SPEN	RX9	SREN	CREN	ADDEN	FERR	OERR	RX9D	346
SPBRGL	BRG<7:0>								348
SPBRGH	BRG<15:8>								348
TXSTA	CSRC	TX9	TXEN	SYNC	SENDB	BRGH	TRMT	TX9D	345

Legend: — = unimplemented location, read as '0'. Shaded cells are not used for the Baud Rate Generator.

* Page provides register information.

TABLE 27-5: BAUD RATES FOR ASYNCHRONOUS MODES

BAUD RATE	SYNC = 0, BRGH = 0, BRG16 = 0											
	FOSC = 32.000 MHz			FOSC = 20.000 MHz			FOSC = 18.432 MHz			FOSC = 11.0592 MHz		
	Actual Rate	% Error	SPBRG value (decimal)	Actual Rate	% Error	SPBRG value (decimal)	Actual Rate	% Error	SPBRG value (decimal)	Actual Rate	% Error	SPBRG value (decimal)
300	—	—	—	—	—	—	—	—	—	—	—	—
1200	—	—	—	1221	1.73	255	1200	0.00	239	1200	0.00	143
2400	2404	0.16	207	2404	0.16	129	2400	0.00	119	2400	0.00	71
9600	9615	0.16	51	9470	-1.36	32	9600	0.00	29	9600	0.00	17
10417	10417	0.00	47	10417	0.00	29	10286	-1.26	27	10165	-2.42	16
19.2k	19.23k	0.16	25	19.53k	1.73	15	19.20k	0.00	14	19.20k	0.00	8
57.6k	55.55k	-3.55	3	—	—	—	57.60k	0.00	7	57.60k	0.00	2
115.2k	—	—	—	—	—	—	—	—	—	—	—	—

BAUD RATE	SYNC = 0, BRGH = 0, BRG16 = 0											
	FOSC = 8.000 MHz			FOSC = 4.000 MHz			FOSC = 3.6864 MHz			FOSC = 1.000 MHz		
	Actual Rate	% Error	SPBRG value (decimal)	Actual Rate	% Error	SPBRG value (decimal)	Actual Rate	% Error	SPBRG value (decimal)	Actual Rate	% Error	SPBRG value (decimal)
300	—	—	—	300	0.16	207	300	0.00	191	300	0.16	51
1200	1202	0.16	103	1202	0.16	51	1200	0.00	47	1202	0.16	12
2400	2404	0.16	51	2404	0.16	25	2400	0.00	23	—	—	—
9600	9615	0.16	12	—	—	—	9600	0.00	5	—	—	—
10417	10417	0.00	11	10417	0.00	5	—	—	—	—	—	—
19.2k	—	—	—	—	—	—	19.20k	0.00	2	—	—	—
57.6k	—	—	—	—	—	—	57.60k	0.00	0	—	—	—
115.2k	—	—	—	—	—	—	—	—	—	—	—	—

BAUD RATE	SYNC = 0, BRGH = 1, BRG16 = 0											
	FOSC = 32.000 MHz			FOSC = 20.000 MHz			FOSC = 18.432 MHz			FOSC = 11.0592 MHz		
	Actual Rate	% Error	SPBRG value (decimal)	Actual Rate	% Error	SPBRG value (decimal)	Actual Rate	% Error	SPBRG value (decimal)	Actual Rate	% Error	SPBRG value (decimal)
300	—	—	—	—	—	—	—	—	—	—	—	—
1200	—	—	—	—	—	—	—	—	—	—	—	—
2400	—	—	—	—	—	—	—	—	—	—	—	—
9600	9615	0.16	207	9615	0.16	129	9600	0.00	119	9600	0.00	71
10417	10417	0.00	191	10417	0.00	119	10378	-0.37	110	10473	0.53	65
19.2k	19.23k	0.16	103	19.23k	0.16	64	19.20k	0.00	59	19.20k	0.00	35
57.6k	57.14k	-0.79	34	56.82k	-1.36	21	57.60k	0.00	19	57.60k	0.00	11
115.2k	117.64k	2.12	16	113.64k	-1.36	10	115.2k	0.00	9	115.2k	0.00	5

© 2012-2014 Microchip Technology Inc.

TABLE 27-5: BAUD RATES FOR ASYNCHRONOUS MODES (CONTINUED)

BAUD RATE	SYNC = 0, BRGH = 1, BRG16 = 0											
	FOSC = 8.000 MHz			FOSC = 4.000 MHz			FOSC = 3.6864 MHz			FOSC = 1.000 MHz		
	Actual Rate	% Error	SPBRG value (decimal)	Actual Rate	% Error	SPBRG value (decimal)	Actual Rate	% Error	SPBRG value (decimal)	Actual Rate	% Error	SPBRG value (decimal)
300	—	—	—	—	—	—	—	—	—	300	0.16	207
1200	—	—	—	1202	0.16	207	1200	0.00	191	1202	0.16	51
2400	2404	0.16	207	2404	0.16	103	2400	0.00	95	2404	0.16	25
9600	9615	0.16	51	9615	0.16	25	9600	0.00	23	—	—	—
10417	10417	0.00	47	10417	0.00	23	10473	0.53	21	10417	0.00	5
19.2k	19231	0.16	25	19.23k	0.16	12	19.2k	0.00	11	—	—	—
57.6k	55556	-3.55	8	—	—	—	57.60k	0.00	3	—	—	—
115.2k	—	—	—	—	—	—	115.2k	0.00	1	—	—	—

BAUD RATE	SYNC = 0, BRGH = 0, BRG16 = 1											
	FOSC = 32.000 MHz			FOSC = 20.000 MHz			FOSC = 18.432 MHz			FOSC = 11.0592 MHz		
	Actual Rate	% Error	SPBRG value (decimal)	Actual Rate	% Error	SPBRG value (decimal)	Actual Rate	% Error	SPBRG value (decimal)	Actual Rate	% Error	SPBRG value (decimal)
300	300.0	0.00	6666	300.0	-0.01	4166	300.0	0.00	3839	300.0	0.00	2303
1200	1200	-0.02	3332	1200	-0.03	1041	1200	0.00	959	1200	0.00	575
2400	2401	-0.04	832	2399	-0.03	520	2400	0.00	479	2400	0.00	287
9600	9615	0.16	207	9615	0.16	129	9600	0.00	119	9600	0.00	71
10417	10417	0.00	191	10417	0.00	119	10378	-0.37	110	10473	0.53	65
19.2k	19.23k	0.16	103	19.23k	0.16	64	19.20k	0.00	59	19.20k	0.00	35
57.6k	57.14k	-0.79	34	56.818	-1.36	21	57.60k	0.00	19	57.60k	0.00	11
115.2k	117.6k	2.12	16	113.636	-1.36	10	115.2k	0.00	9	115.2k	0.00	5

BAUD RATE	SYNC = 0, BRGH = 0, BRG16 = 1											
	FOSC = 8.000 MHz			FOSC = 4.000 MHz			FOSC = 3.6864 MHz			FOSC = 1.000 MHz		
	Actual Rate	% Error	SPBRG value (decimal)	Actual Rate	% Error	SPBRG value (decimal)	Actual Rate	% Error	SPBRG value (decimal)	Actual Rate	% Error	SPBRG value (decimal)
300	299.9	-0.02	1666	300.1	0.04	832	300.0	0.00	767	300.5	0.16	207
1200	1199	-0.08	416	1202	0.16	207	1200	0.00	191	1202	0.16	51
2400	2404	0.16	207	2404	0.16	103	2400	0.00	95	2404	0.16	25
9600	9615	0.16	51	9615	0.16	25	9600	0.00	23	—	—	—
10417	10417	0.00	47	10417	0.00	23	10473	0.53	21	10417	0.00	5
19.2k	19.23k	0.16	25	19.23k	0.16	12	19.20k	0.00	11	—	—	—
57.6k	55556	-3.55	8	—	—	—	57.60k	0.00	3	—	—	—
115.2k	—	—	—	—	—	—	115.2k	0.00	1	—	—	—

TABLE 27-5: BAUD RATES FOR ASYNCHRONOUS MODES (CONTINUED)

BAUD RATE	SYNC = 0, BRGH = 1, BRG16 = 1 or SYNC = 1, BRG16 = 1											
	FOSC = 32.000 MHz			FOSC = 20.000 MHz			FOSC = 18.432 MHz			FOSC = 11.0592 MHz		
	Actual Rate	% Error	SPBRG value (decimal)	Actual Rate	% Error	SPBRG value (decimal)	Actual Rate	% Error	SPBRG value (decimal)	Actual Rate	% Error	SPBRG value (decimal)
300	300.0	0.00	26666	300.0	0.00	16665	300.0	0.00	15359	300.0	0.00	9215
1200	1200	0.00	6666	1200	-0.01	4166	1200	0.00	3839	1200	0.00	2303
2400	2400	0.01	3332	2400	0.02	2082	2400	0.00	1919	2400	0.00	1151
9600	9604	0.04	832	9597	-0.03	520	9600	0.00	479	9600	0.00	287
10417	10417	0.00	767	10417	0.00	479	10425	0.08	441	10433	0.16	264
19.2k	19.18k	-0.08	416	19.23k	0.16	259	19.20k	0.00	239	19.20k	0.00	143
57.6k	57.55k	-0.08	138	57.47k	-0.22	86	57.60k	0.00	79	57.60k	0.00	47
115.2k	115.9k	0.64	68	116.3k	0.94	42	115.2k	0.00	39	115.2k	0.00	23

BAUD RATE	SYNC = 0, BRGH = 1, BRG16 = 1 or SYNC = 1, BRG16 = 1											
	FOSC = 8.000 MHz			FOSC = 4.000 MHz			FOSC = 3.6864 MHz			FOSC = 1.000 MHz		
	Actual Rate	% Error	SPBRG value (decimal)	Actual Rate	% Error	SPBRG value (decimal)	Actual Rate	% Error	SPBRG value (decimal)	Actual Rate	% Error	SPBRG value (decimal)
300	300.0	0.00	6666	300.0	0.01	3332	300.0	0.00	3071	300.1	0.04	832
1200	1200	-0.02	1666	1200	0.04	832	1200	0.00	767	1202	0.16	207
2400	2401	0.04	832	2398	0.08	416	2400	0.00	383	2404	0.16	103
9600	9615	0.16	207	9615	0.16	103	9600	0.00	95	9615	0.16	25
10417	10417	0	191	10417	0.00	95	10473	0.53	87	10417	0.00	23
19.2k	19.23k	0.16	103	19.23k	0.16	51	19.20k	0.00	47	19.23k	0.16	12
57.6k	57.14k	-0.79	34	58.82k	2.12	16	57.60k	0.00	15	—	—	—
115.2k	117.6k	2.12	16	111.1k	-3.55	8	115.2k	0.00	7	—	—	—

© 2012-2014 Microchip Technology Inc.

27.4.1 AUTO-BAUD DETECT

The EUSART module supports automatic detection and calibration of the baud rate.

In the Auto-Baud Detect (ABD) mode, the clock to the BRG is reversed. Rather than the BRG clocking the incoming RX signal, the RX signal is timing the BRG. The Baud Rate Generator is used to time the period of a received 55h (ASCII “U”) which is the Sync character for the LIN bus. The unique feature of this character is that it has five rising edges including the Stop bit edge.

Setting the ABDEN bit of the BAUDCON register starts the auto-baud calibration sequence (Figure 27-6). While the ABD sequence takes place, the EUSART state machine is held in idle. On the first rising edge of the receive line, after the Start bit, the SPBRG begins counting up using the BRG counter clock as shown in Table 27-6. The fifth rising edge will occur on the RX pin at the end of the eighth bit period. At that time, an accumulated value totaling the proper BRG period is left in the SPBRGH, SPBRGL register pair, the ABDEN bit is automatically cleared and the RCIF interrupt flag is set. The value in the RCREG needs to be read to clear the RCIF interrupt. RCREG content should be discarded. When calibrating for modes that do not use the SPBRGH register the user can verify that the SPBRGL register did not overflow by checking for 00h in the SPBRGH register.

The BRG auto-baud clock is determined by the BRG16 and BRGH bits as shown in Table 27-6. During ABD, both the SPBRGH and SPBRGL registers are used as a 16-bit counter, independent of the BRG16 bit setting. While calibrating the baud rate period, the SPBRGH and SPBRGL registers are clocked at 1/8th the BRG base clock rate. The resulting byte measurement is the average bit time when clocked at full speed.

Note 1: If the WUE bit is set with the ABDEN bit, auto-baud detection will occur on the byte following the Break character (see **Section 27.4.3 “Auto-Wake-up on Break”**).

2: It is up to the user to determine that the incoming character baud rate is within the range of the selected BRG clock source. Some combinations of oscillator frequency and EUSART baud rates are not possible.

3: During the auto-baud process, the auto-baud counter starts counting at 1. Upon completion of the auto-baud sequence, to achieve maximum accuracy, subtract 1 from the SPBRGH:SPBRGL register pair.

TABLE 27-6: BRG COUNTER CLOCK RATES

BRG16	BRGH	BRG Base Clock	BRG ABD Clock
0	0	FOSC/64	FOSC/512
0	1	FOSC/16	FOSC/128
1	0	FOSC/16	FOSC/128
1	1	FOSC/4	FOSC/32

Note: During the ABD sequence, SPBRGL and SPBRGH registers are both used as a 16-bit counter, independent of BRG16 setting.

FIGURE 27-6: AUTOMATIC BAUD RATE CALIBRATION

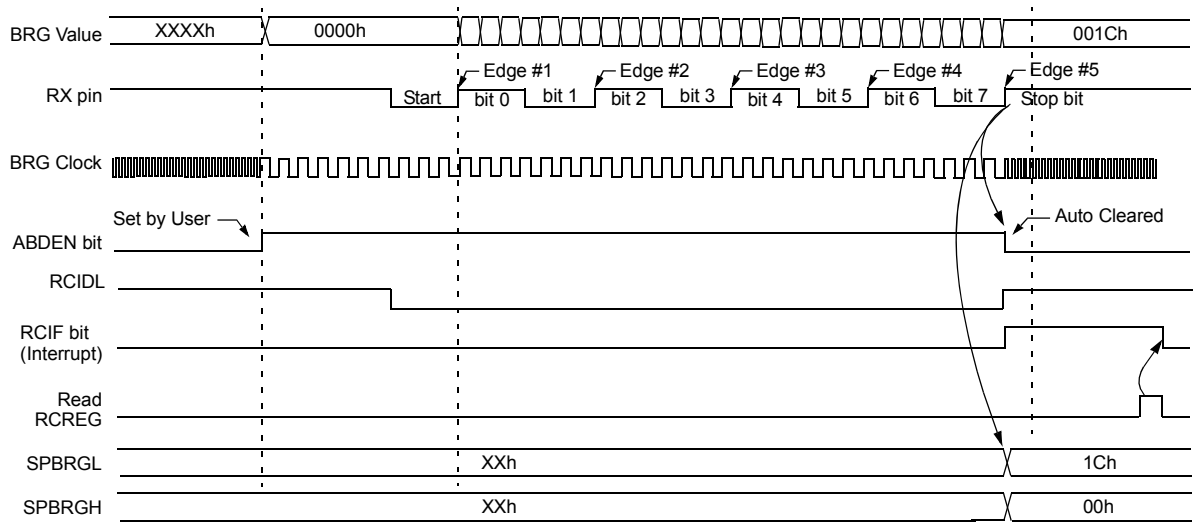

Note 1: The ABD sequence requires the **EUSART** module to be configured in Asynchronous mode.

27.4.2 AUTO-BAUD OVERFLOW

During the course of automatic baud detection, the ABDOVF bit of the BAUDCON register will be set if the baud rate counter overflows before the fifth rising edge is detected on the RX pin. The ABDOVF bit indicates that the counter has exceeded the maximum count that can fit in the 16 bits of the SPBRGH:SPBRGL register pair. After the ABDOVF bit has been set, the counter continues to count until the fifth rising edge is detected on the RX pin. Upon detecting the fifth RX edge, the hardware will set the RCIF interrupt flag and clear the ABDEN bit of the BAUDCON register. The RCIF flag can be subsequently cleared by reading the RCREG register. The ABDOVF flag of the BAUDCON register can be cleared by software directly.

To terminate the auto-baud process before the RCIF flag is set, clear the ABDEN bit then clear the ABDOVF bit of the BAUDCON register. The ABDOVF bit will remain set if the ABDEN bit is not cleared first.

27.4.3 AUTO-WAKE-UP ON BREAK

During Sleep mode, all clocks to the EUSART are suspended. Because of this, the Baud Rate Generator is inactive and a proper character reception cannot be performed. The Auto-Wake-up feature allows the controller to wake-up due to activity on the RX/DT line. This feature is available only in Asynchronous mode.

The Auto-Wake-up feature is enabled by setting the WUE bit of the BAUDCON register. Once set, the normal receive sequence on RX/DT is disabled, and the EUSART remains in an Idle state, monitoring for a wake-up event independent of the CPU mode. A wake-up event consists of a high-to-low transition on the RX/DT line. (This coincides with the start of a Sync Break or a wake-up signal character for the LIN protocol.)

The EUSART module generates an RCIF interrupt coincident with the wake-up event. The interrupt is generated synchronously to the Q clocks in normal CPU operating modes (Figure 27-7), and asynchronously if the device is in Sleep mode (Figure 27-8). The interrupt condition is cleared by reading the RCREG register.

The WUE bit is automatically cleared by the low-to-high transition on the RX line at the end of the Break. This signals to the user that the Break event is over. At this point, the EUSART module is in Idle mode waiting to receive the next character.

27.4.3.1 Special Considerations

Break Character

To avoid character errors or character fragments during a wake-up event, the wake-up character must be all zeros.

When the wake-up is enabled the function works independent of the low time on the data stream. If the WUE bit is set and a valid non-zero character is received, the low time from the Start bit to the first rising edge will be interpreted as the wake-up event. The remaining bits in the character will be received as a fragmented character and subsequent characters can result in framing or overrun errors.

Therefore, the initial character in the transmission must be all '0's. This must be ten or more bit times, 13-bit times recommended for LIN bus, or any number of bit times for standard RS-232 devices.

Oscillator Start-up Time

Oscillator start-up time must be considered, especially in applications using oscillators with longer start-up intervals (i.e., LP, XT or HS/PLL mode). The Sync Break (or wake-up signal) character must be of sufficient length, and be followed by a sufficient interval, to allow enough time for the selected oscillator to start and provide proper initialization of the EUSART.

WUE Bit

The wake-up event causes a receive interrupt by setting the RCIF bit. The WUE bit is cleared in hardware by a rising edge on RX/DT. The interrupt condition is then cleared in software by reading the RCREG register and discarding its contents.

To ensure that no actual data is lost, check the RCIDL bit to verify that a receive operation is not in process before setting the WUE bit. If a receive operation is not occurring, the WUE bit may then be set just prior to entering the Sleep mode.

© 2012-2014 Microchip Technology Inc.

FIGURE 27-7: AUTO-WAKE-UP BIT (WUE) TIMING DURING NORMAL OPERATION

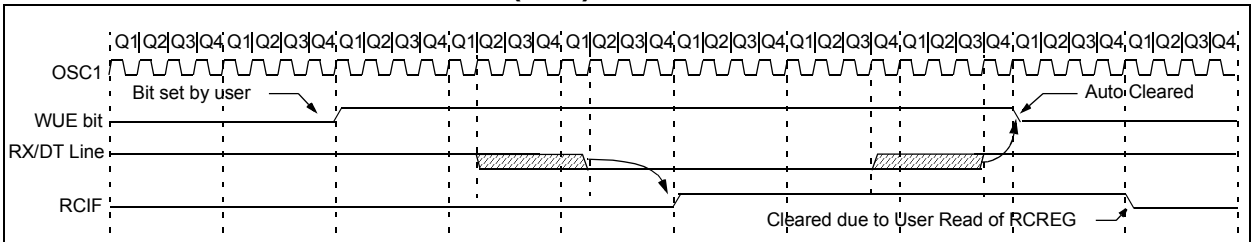

Note 1: The **EUSART** remains in idle while the WUE bit is set.

FIGURE 27-8: AUTO-WAKE-UP BIT (WUE) TIMINGS DURING SLEEP

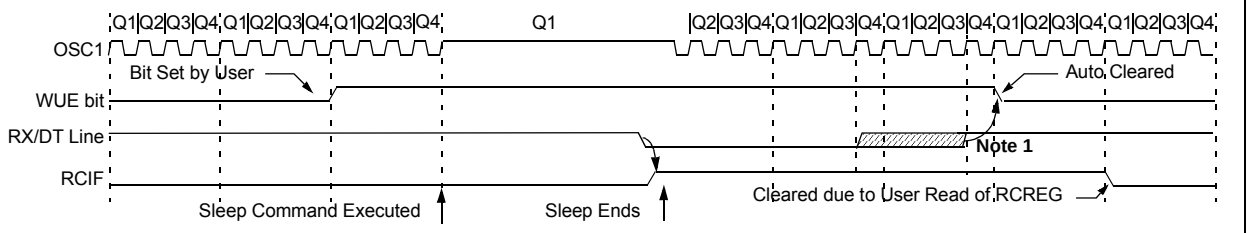

Note 1: If the wake-up event requires long oscillator warm-up time, the automatic clearing of the WUE bit can occur while the `stposc` signal is still active. This sequence should not depend on the presence of Q clocks.

2: The **EUSART** remains in idle while the WUE bit is set.

27.4.4 BREAK CHARACTER SEQUENCE

The EUSART module has the capability of sending the special Break character sequences that are required by the LIN bus standard. A Break character consists of a Start bit, followed by 12 '0' bits and a Stop bit.

To send a Break character, set the SENDB and TXEN bits of the TXSTA register. The Break character transmission is then initiated by a write to the TXREG. The value of data written to TXREG will be ignored and all '0's will be transmitted.

The SENDB bit is automatically reset by hardware after the corresponding Stop bit is sent. This allows the user to preload the transmit FIFO with the next transmit byte following the Break character (typically, the Sync character in the LIN specification).

The TRMT bit of the TXSTA register indicates when the transmit operation is active or idle, just as it does during normal transmission. See Figure 27-9 for the timing of the Break character sequence.

27.4.4.1 Break and Sync Transmit Sequence

The following sequence will start a message frame header made up of a Break, followed by an auto-baud Sync byte. This sequence is typical of a LIN bus master.

1. Configure the EUSART for the desired mode.
2. Set the TXEN and SENDB bits to enable the Break sequence.
3. Load the TXREG with a dummy character to initiate transmission (the value is ignored).
4. Write '55h' to TXREG to load the Sync character into the transmit FIFO buffer.
5. After the Break has been sent, the SENDB bit is reset by hardware and the Sync character is then transmitted.

When the TXREG becomes empty, as indicated by the TXIF, the next data byte can be written to TXREG.

27.4.5 RECEIVING A BREAK CHARACTER

The Enhanced EUSART module can receive a Break character in two ways.

The first method to detect a Break character uses the FERR bit of the RCSTA register and the received data as indicated by RCREG. The Baud Rate Generator is assumed to have been initialized to the expected baud rate.

A Break character has been received when;

- RCIF bit is set
- FERR bit is set
- RCREG = 00h

The second method uses the Auto-Wake-up feature described in **Section 27.4.3 "Auto-Wake-up on Break"**. By enabling this feature, the EUSART will sample the next two transitions on RX/DT, cause an RCIF interrupt, and receive the next data byte followed by another interrupt.

Note that following a Break character, the user will typically want to enable the Auto-Baud Detect feature. For both methods, the user can set the ABDEN bit of the BAUDCON register before placing the EUSART in Sleep mode.

FIGURE 27-9: SEND BREAK CHARACTER SEQUENCE

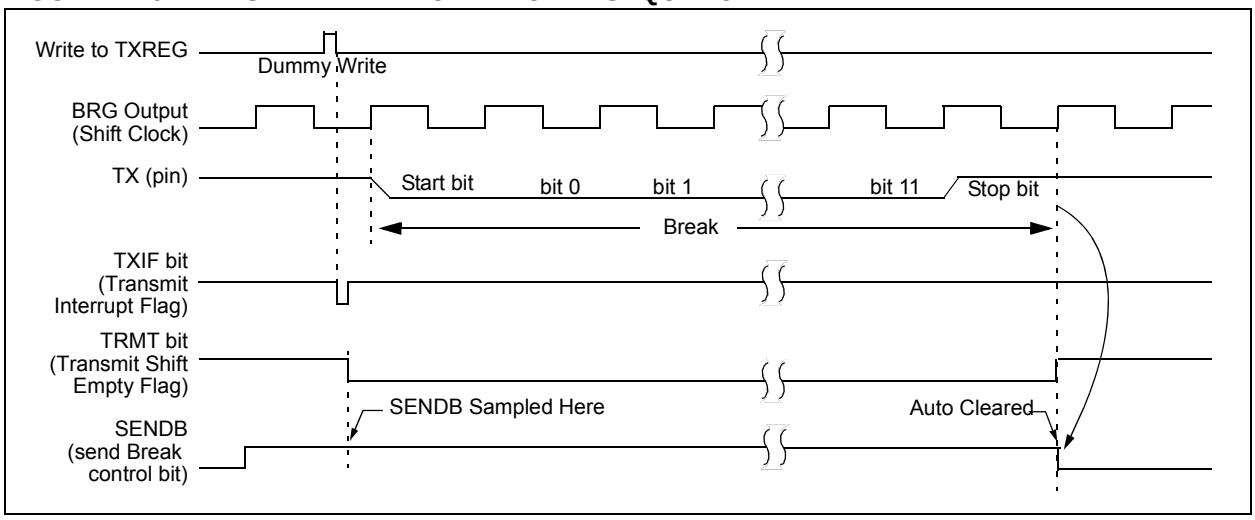

© 2012-2014 Microchip Technology Inc.

27.5 EUSART Synchronous Mode

Synchronous serial communications are typically used in systems with a single master and one or more slaves. The master device contains the necessary circuitry for baud rate generation and supplies the clock for all devices in the system. Slave devices can take advantage of the master clock by eliminating the internal clock generation circuitry.

There are two signal lines in Synchronous mode: a bidirectional data line and a clock line. Slaves use the external clock supplied by the master to shift the serial data into and out of their respective receive and transmit shift registers. Since the data line is bidirectional, synchronous operation is half-duplex only. Half-duplex refers to the fact that master and slave devices can receive and transmit data but not both simultaneously. The EUSART can operate as either a master or slave device.

Start and Stop bits are not used in synchronous transmissions.

27.5.1 SYNCHRONOUS MASTER MODE

The following bits are used to configure the EUSART for synchronous master operation:

- SYNC = 1
- CSRC = 1
- SREN = 0 (for transmit); SREN = 1 (for receive)
- CREN = 0 (for transmit); CREN = 1 (for receive)
- SPEN = 1

Setting the SYNC bit of the TXSTA register configures the device for synchronous operation. Setting the CSRC bit of the TXSTA register configures the device as a master. Clearing the SREN and CREN bits of the RCSTA register ensures that the device is in the Transmit mode, otherwise the device will be configured to receive. Setting the SPEN bit of the RCSTA register enables the EUSART.

27.5.1.1 Master Clock

Synchronous data transfers use a separate clock line, which is synchronous with the data. A device configured as a master transmits the clock on the TX/CK line. The TX/CK pin output driver is automatically enabled when the EUSART is configured for synchronous transmit or receive operation. Serial data bits change on the leading edge to ensure they are valid at the trailing edge of each clock. One clock cycle is generated for each data bit. Only as many clock cycles are generated as there are data bits.

27.5.1.2 Clock Polarity

A clock polarity option is provided for Microwire compatibility. Clock polarity is selected with the SCKP bit of the BAUDCON register. Setting the SCKP bit sets the clock Idle state as high. When the SCKP bit is set, the data changes on the falling edge of each clock. Clearing the SCKP bit sets the Idle state as low. When the SCKP bit is cleared, the data changes on the rising edge of each clock.

27.5.1.3 Synchronous Master Transmission

Data is transferred out of the device on the RX/DT pin. The RX/DT and TX/CK pin output drivers are automatically enabled when the EUSART is configured for synchronous master transmit operation.

A transmission is initiated by writing a character to the TXREG register. If the TSR still contains all or part of a previous character the new character data is held in the TXREG until the last bit of the previous character has been transmitted. If this is the first character, or the previous character has been completely flushed from the TSR, the data in the TXREG is immediately transferred to the TSR. The transmission of the character commences immediately following the transfer of the data to the TSR from the TXREG.

Each data bit changes on the leading edge of the master clock and remains valid until the subsequent leading clock edge.

Note:	The TSR register is not mapped in data memory, so it is not available to the user.

27.5.1.4 Synchronous Master Transmission Set-up:

1. Initialize the SPBRGH, SPBRGL register pair and the BRGH and BRG16 bits to achieve the desired baud rate (see **Section 27.4 “EUSART Baud Rate Generator (BRG)”**).
2. Enable the synchronous master serial port by setting bits SYNC, SPEN and CSRC.
3. Disable Receive mode by clearing bits SREN and CREN.
4. Enable Transmit mode by setting the TXEN bit.
5. If 9-bit transmission is desired, set the TX9 bit.
6. If interrupts are desired, set the TXIE bit of the PIE1 register and the GIE and PEIE bits of the INTCON register.
7. If 9-bit transmission is selected, the ninth bit should be loaded in the TX9D bit.
8. Start transmission by loading data to the TXREG register.

FIGURE 27-10: SYNCHRONOUS TRANSMISSION

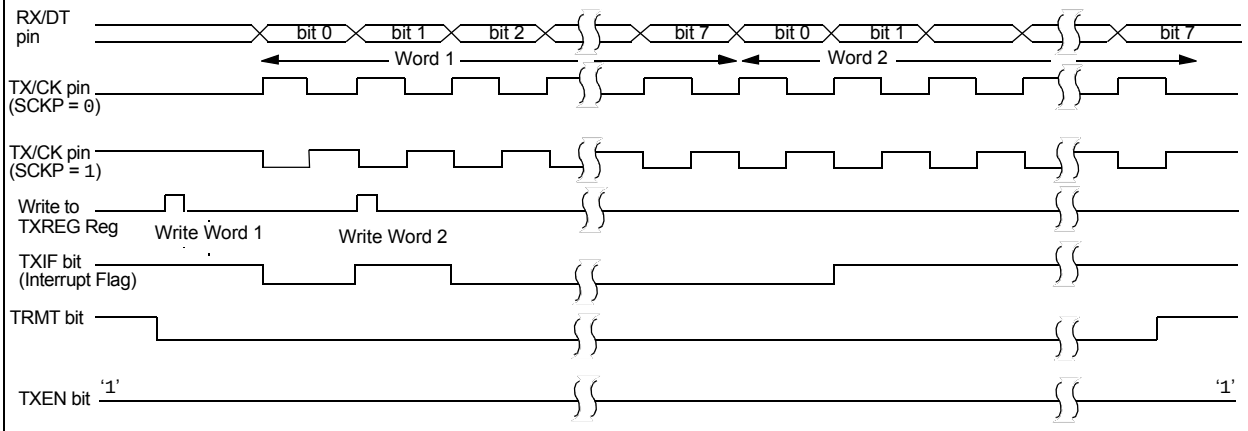

Note: Sync Master mode, SPBRGL = 0, continuous transmission of two 8-bit words.

FIGURE 27-11: SYNCHRONOUS TRANSMISSION (THROUGH TXEN)

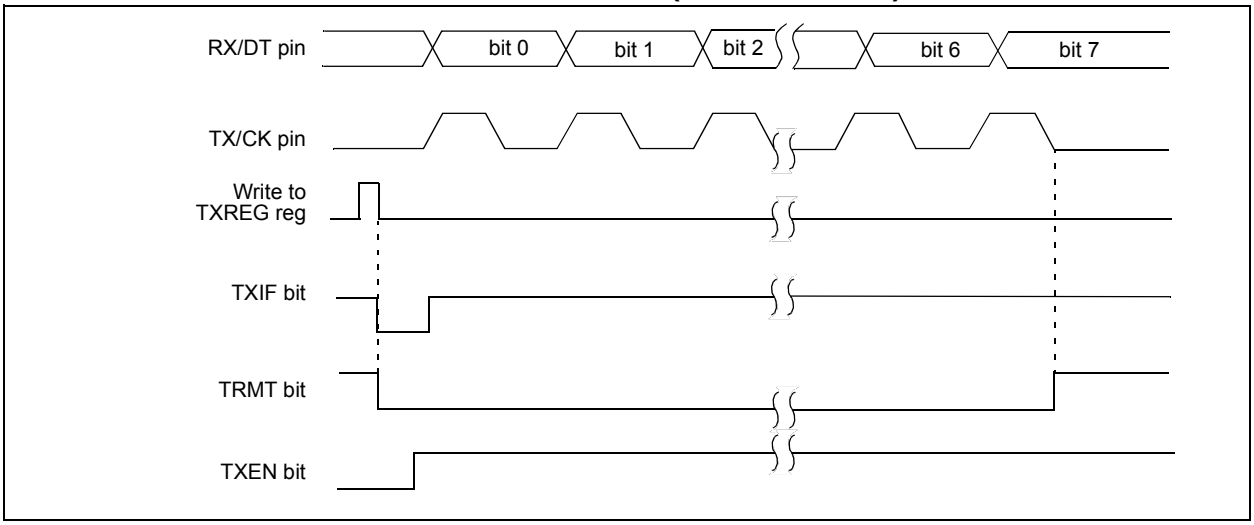

TABLE 27-7: SUMMARY OF REGISTERS ASSOCIATED WITH SYNCHRONOUS MASTER TRANSMISSION

Name	Bit 7	Bit 6	Bit 5	Bit 4	Bit 3	Bit 2	Bit 1	Bit 0	Register on Page
APFCON1	C2OUTSEL	CC1PSEL	SDOSEL	SCKSEL	SDISEL	TXSEL	RXSEL	CCP2SEL	127
BAUDCON	ABDOVF	RCIDL	—	SCKP	BRG16	—	WUE	ABDEN	347
INTCON	GIE	PEIE	TMR0IE	INTE	IOCIE	TMR0IF	INTF	IOCIF	93
PIE1	TMR1GIE	ADIE	RCIE	TXIE	SSP1IE	CCP1IE	TMR2IE	TMR1IE	94
PIR1	TMR1GIF	ADIF	RCIF	TXIF	SSP1IF	CCP1IF	TMR2IF	TMR1IF	98
RCSTA	SPEN	RX9	SREN	CREN	ADDEN	FERR	OERR	RX9D	346
SPBRGL	BRG<7:0>								348
SPBRGH	BRG<15:8>								348
TRISC	TRISC7	TRISC6	TRISC5	TRISC4	TRISC3	TRISC2	TRISC1	TRISC0	142
TXREG	EUSART Transmit Data Register								337*
TXSTA	CSRC	TX9	TXEN	SYNC	SENDB	BRGH	TRMT	TX9D	345

Legend: — = unimplemented location, read as '0'. Shaded cells are not used for synchronous master transmission.
* Page provides register information.

© 2012-2014 Microchip Technology Inc.

27.5.1.5 Synchronous Master Reception

Data is received at the RX/DT pin. The RX/DT pin output driver is automatically disabled when the EUSART is configured for synchronous master receive operation.

In Synchronous mode, reception is enabled by setting either the Single Receive Enable bit (SREN of the RCSTA register) or the Continuous Receive Enable bit (CREN of the RCSTA register).

When SREN is set and CREN is clear, only as many clock cycles are generated as there are data bits in a single character. The SREN bit is automatically cleared at the completion of one character. When CREN is set, clocks are continuously generated until CREN is cleared. If CREN is cleared in the middle of a character the CK clock stops immediately and the partial character is discarded. If SREN and CREN are both set, then SREN is cleared at the completion of the first character and CREN takes precedence.

To initiate reception, set either SREN or CREN. Data is sampled at the RX/DT pin on the trailing edge of the TX/CK clock pin and is shifted into the Receive Shift Register (RSR). When a complete character is received into the RSR, the RCIF bit is set and the character is automatically transferred to the two character receive FIFO. The Least Significant eight bits of the top character in the receive FIFO are available in RCREG. The RCIF bit remains set as long as there are unread characters in the receive FIFO.

Note:	If the RX/DT function is on an analog pin, the corresponding ANSEL bit must be cleared for the receiver to function.

27.5.1.6 Slave Clock

Synchronous data transfers use a separate clock line, which is synchronous with the data. A device configured as a slave receives the clock on the TX/CK line. The TX/CK pin output driver is automatically disabled when the device is configured for synchronous slave transmit or receive operation. Serial data bits change on the leading edge to ensure they are valid at the trailing edge of each clock. One data bit is transferred for each clock cycle. Only as many clock cycles should be received as there are data bits.

Note:	If the device is configured as a slave and the TX/CK function is on an analog pin, the corresponding ANSEL bit must be cleared.

27.5.1.7 Receive Overrun Error

The receive FIFO buffer can hold two characters. An overrun error will be generated if a third character, in its entirety, is received before RCREG is read to access the FIFO. When this happens the OERR bit of the RCSTA register is set. Previous data in the FIFO will not be overwritten. The two characters in the FIFO buffer can be read, however, no additional characters will be received until the error is cleared. The OERR bit can only be cleared by clearing the overrun condition. If the overrun error occurred when the SREN bit is set and CREN is clear then the error is cleared by reading RCREG. If the overrun occurred when the CREN bit is set then the error condition is cleared by either clearing the CREN bit of the RCSTA register or by clearing the SPEN bit which resets the EUSART.

27.5.1.8 Receiving 9-bit Characters

The EUSART supports 9-bit character reception. When the RX9 bit of the RCSTA register is set the EUSART will shift 9-bits into the RSR for each character received. The RX9D bit of the RCSTA register is the ninth, and Most Significant, data bit of the top unread character in the receive FIFO. When reading 9-bit data from the receive FIFO buffer, the RX9D data bit must be read before reading the eight Least Significant bits from the RCREG.

27.5.1.9 Synchronous Master Reception Set-up:

1. Initialize the SPBRGH, SPBRGL register pair for the appropriate baud rate. Set or clear the BRGH and BRG16 bits, as required, to achieve the desired baud rate.
2. Clear the ANSEL bit for the RX pin (if applicable).
3. Enable the synchronous master serial port by setting bits SYNC, SPEN and CSRC.
4. Ensure bits CREN and SREN are clear.
5. If interrupts are desired, set the RCIE bit of the PIE1 register and the GIE and PEIE bits of the INTCON register.
6. If 9-bit reception is desired, set bit RX9.
7. Start reception by setting the SREN bit or for continuous reception, set the CREN bit.
8. Interrupt flag bit RCIF will be set when reception of a character is complete. An interrupt will be generated if the enable bit RCIE was set.
9. Read the RCSTA register to get the ninth bit (if enabled) and determine if any error occurred during reception.
10. Read the 8-bit received data by reading the RCREG register.
11. If an overrun error occurs, clear the error by either clearing the CREN bit of the RCSTA register or by clearing the SPEN bit which resets the EUSART.

FIGURE 27-12: SYNCHRONOUS RECEPTION (MASTER MODE, SREN)

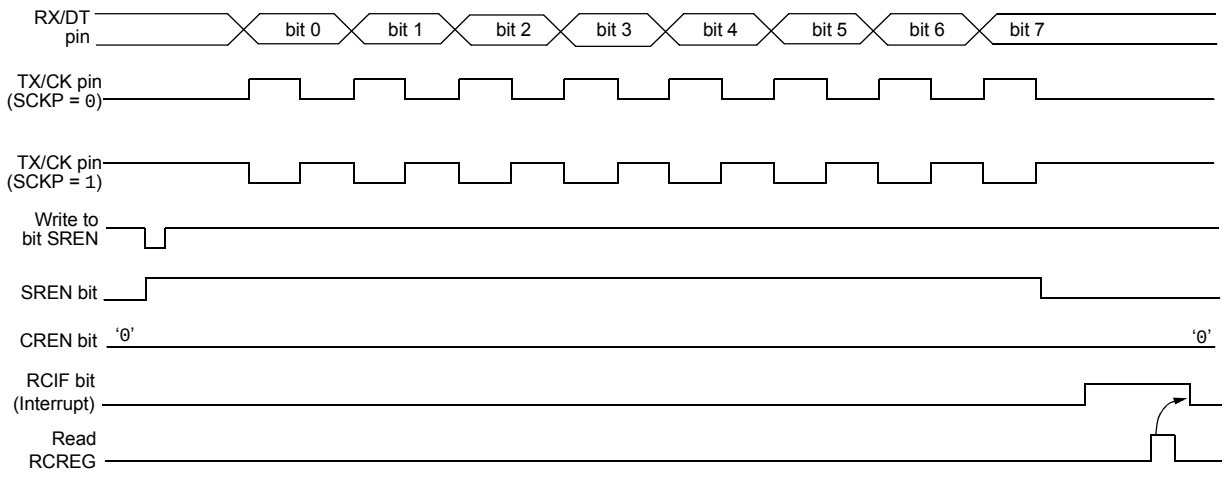

Note: Timing diagram demonstrates Sync Master mode with bit SREN = 1 and bit BRGH = 0.

TABLE 27-8: SUMMARY OF REGISTERS ASSOCIATED WITH SYNCHRONOUS MASTER RECEPTION

Name	Bit 7	Bit 6	Bit 5	Bit 4	Bit 3	Bit 2	Bit 1	Bit 0	Register on Page
APFCON1	C2OUTSEL	CC1PSEL	SDOSEL	SCKSEL	SDISEL	TXSEL	RXSEL	CCP2SEL	127
BAUDCON	ABDOVF	RCIDL	—	SCKP	BRG16	—	WUE	ABDEN	347
INTCON	GIE	PEIE	TMR0IE	INTE	IOCIE	TMR0IF	INTF	IOCIF	93
PIE1	TMR1GIE	ADIE	RCIE	TXIE	SSP1IE	CCP1IE	TMR2IE	TMR1IE	94
PIR1	TMR1GIF	ADIF	RCIF	TXIF	SSP1IF	CCP1IF	TMR2IF	TMR1IF	98
RCREG	EUSART Receive Data Register								340*
RCSTA	SPEN	RX9	SREN	CREN	ADDEN	FERR	OERR	RX9D	346
SPBRGL	BRG<7:0>								348
SPBRGH	BRG<15:8>								348
TRISC	TRISC7	TRISC6	TRISC5	TRISC4	TRISC3	TRISC2	TRISC1	TRISC0	142
TXSTA	CSRC	TX9	TXEN	SYNC	SENDB	BRGH	TRMT	TX9D	345

Legend: — = unimplemented location, read as '0'. Shaded cells are not used for synchronous master reception.
* Page provides register information.

© 2012-2014 Microchip Technology Inc.

27.5.2 SYNCHRONOUS SLAVE MODE

The following bits are used to configure the EUSART for synchronous slave operation:

- SYNC = 1
- CSRC = 0
- SREN = 0 (for transmit); SREN = 1 (for receive)
- CREN = 0 (for transmit); CREN = 1 (for receive)
- SPEN = 1

Setting the SYNC bit of the TXSTA register configures the device for synchronous operation. Clearing the CSRC bit of the TXSTA register configures the device as a slave. Clearing the SREN and CREN bits of the RCSTA register ensures that the device is in the Transmit mode, otherwise the device will be configured to receive. Setting the SPEN bit of the RCSTA register enables the EUSART.

27.5.2.1 EUSART Synchronous Slave Transmit

The operation of the Synchronous Master and Slave modes are identical (see **Section 27.5.1.3 "Synchronous Master Transmission"**), except in the case of the Sleep mode.

If two words are written to the TXREG and then the SLEEP instruction is executed, the following will occur:

1. The first character will immediately transfer to the TSR register and transmit.
2. The second word will remain in TXREG register.
3. The TXIF bit will not be set.
4. After the first character has been shifted out of TSR, the TXREG register will transfer the second character to the TSR and the TXIF bit will now be set.
5. If the PEIE and TXIE bits are set, the interrupt will wake the device from Sleep and execute the next instruction. If the GIE bit is also set, the program will call the Interrupt Service Routine.

27.5.2.2 Synchronous Slave Transmission Set-up:

1. Set the SYNC and SPEN bits and clear the CSRC bit.
2. Clear the ANSEL bit for the CK pin (if applicable).
3. Clear the CREN and SREN bits.
4. If interrupts are desired, set the TXIE bit of the PIE1 register and the GIE and PEIE bits of the INTCON register.
5. If 9-bit transmission is desired, set the TX9 bit.
6. Enable transmission by setting the TXEN bit.
7. If 9-bit transmission is selected, insert the Most Significant bit into the TX9D bit.
8. Start transmission by writing the Least Significant eight bits to the TXREG register.

TABLE 27-9: SUMMARY OF REGISTERS ASSOCIATED WITH SYNCHRONOUS SLAVE TRANSMISSION

Name	Bit 7	Bit 6	Bit 5	Bit 4	Bit 3	Bit 2	Bit 1	Bit 0	Register on Page
APFCON1	C2OUTSEL	CC1PSEL	SDOSEL	SCKSEL	SDISEL	TXSEL	RXSEL	CCP2SEL	127
BAUDCON	ABDOVF	RCIDL	—	SCKP	BRG16	—	WUE	ABDEN	347
INTCON	GIE	PEIE	TMR0IE	INTE	IOCIE	TMR0IF	INTF	IOCIF	93
PIE1	TMR1GIE	ADIE	RCIE	TXIE	SSP1IE	CCP1IE	TMR2IE	TMR1IE	94
PIR1	TMR1GIF	ADIF	RCIF	TXIF	SSP1IF	CCP1IF	TMR2IF	TMR1IF	98
RCSTA	SPEN	RX9	SREN	CREN	ADDEN	FERR	OERR	RX9D	346
TRISC	TRISC7	TRISC6	TRISC5	TRISC4	TRISC3	TRISC2	TRISC1	TRISC0	142
TXREG	EUSART Transmit Data Register								337*
TXSTA	CSRC	TX9	TXEN	SYNC	SENDB	BRGH	TRMT	TX9D	345

Legend: — = unimplemented location, read as '0'. Shaded cells are not used for synchronous slave transmission.
* Page provides register information.

27.5.2.3 EUSART Synchronous Slave Reception

The operation of the Synchronous Master and Slave modes is identical (**Section 27.5.1.5 "Synchronous Master Reception"**), with the following exceptions:

- Sleep
- CREN bit is always set, therefore the receiver is never idle
- SREN bit, which is a "don't care" in Slave mode

A character may be received while in Sleep mode by setting the CREN bit prior to entering Sleep. Once the word is received, the RSR register will transfer the data to the RCREG register. If the RCIE enable bit is set, the interrupt generated will wake the device from Sleep and execute the next instruction. If the GIE bit is also set, the program will branch to the interrupt vector.

27.5.2.4 Synchronous Slave Reception Set-up:

1. Set the SYNC and SPEN bits and clear the CSRC bit.
2. Clear the ANSEL bit for both the CK and DT pins (if applicable).
3. If interrupts are desired, set the RCIE bit of the PIE1 register and the GIE and PEIE bits of the INTCON register.
4. If 9-bit reception is desired, set the RX9 bit.
5. Set the CREN bit to enable reception.
6. The RCIF bit will be set when reception is complete. An interrupt will be generated if the RCIE bit was set.
7. If 9-bit mode is enabled, retrieve the Most Significant bit from the RX9D bit of the RCSTA register.
8. Retrieve the eight Least Significant bits from the receive FIFO by reading the RCREG register.
9. If an overrun error occurs, clear the error by either clearing the CREN bit of the RCSTA register or by clearing the SPEN bit which resets the EUSART.

TABLE 27-10: SUMMARY OF REGISTERS ASSOCIATED WITH SYNCHRONOUS SLAVE RECEPTION

Name	Bit 7	Bit 6	Bit 5	Bit 4	Bit 3	Bit 2	Bit 1	Bit 0	Register on Page
APFCON1	C2OUTSEL	CC1PSEL	SDOSEL	SCKSEL	SDISEL	TXSEL	RXSEL	CCP2SEL	127
BAUDCON	ABDOVF	RCIDL	—	SCKP	BRG16	—	WUE	ABDEN	347
INTCON	GIE	PEIE	TMR0IE	INTE	IOCIE	TMR0IF	INTF	IOCIF	93
PIE1	TMR1GIE	ADIE	RCIE	TXIE	SSP1IE	CCP1IE	TMR2IE	TMR1IE	94
PIR1	TMR1GIF	ADIF	RCIF	TXIF	SSP1IF	CCP1IF	TMR2IF	TMR1IF	98
RCREG	EUSART Receive Data Register								340*
RCSTA	SPEN	RX9	SREN	CREN	ADDEN	FERR	OERR	RX9D	346
TRISC	TRISC7	TRISC6	TRISC5	TRISC4	TRISC3	TRISC2	TRISC1	TRISC0	142
TXSTA	CSRC	TX9	TXEN	SYNC	SENDB	BRGH	TRMT	TX9D	345

Legend: — = unimplemented location, read as '0'. Shaded cells are not used for synchronous slave reception.
* Page provides register information.

© 2012-2014 Microchip Technology Inc.

27.6 EUSART Operation During Sleep

The EUSART will remain active during Sleep only in the Synchronous Slave mode. All other modes require the system clock and therefore cannot generate the necessary signals to run the Transmit or Receive Shift registers during Sleep.

Synchronous Slave mode uses an externally generated clock to run the Transmit and Receive Shift registers.

27.6.1 SYNCHRONOUS RECEIVE DURING SLEEP

To receive during Sleep, all the following conditions must be met before entering Sleep mode:

- RCSTA and TXSTA Control registers must be configured for Synchronous Slave Reception (see **Section 27.5.2.4 "Synchronous Slave Reception Set-up:"**).
- If interrupts are desired, set the RCIE bit of the PIE1 register and the GIE and PEIE bits of the INTCON register.
- The RCIF interrupt flag must be cleared by reading RCREG to unload any pending characters in the receive buffer.

Upon entering Sleep mode, the device will be ready to accept data and clocks on the RX/DT and TX/CK pins, respectively. When the data word has been completely clocked in by the external device, the RCIF interrupt flag bit of the PIR1 register will be set. Thereby, waking the processor from Sleep.

Upon waking from Sleep, the instruction following the SLEEP instruction will be executed. If the Global Interrupt Enable (GIE) bit of the INTCON register is also set, then the Interrupt Service Routine at address 004h will be called.

27.6.2 SYNCHRONOUS TRANSMIT DURING SLEEP

To transmit during Sleep, all the following conditions must be met before entering Sleep mode:

- RCSTA and TXSTA Control registers must be configured for synchronous slave transmission (see **Section 27.5.2.2 "Synchronous Slave Transmission Set-up:"**).
- The TXIF interrupt flag must be cleared by writing the output data to the TXREG, thereby filling the TSR and transmit buffer.
- If interrupts are desired, set the TXIE bit of the PIE1 register and the PEIE bit of the INTCON register.
- Interrupt enable bits TXIE of the PIE1 register and PEIE of the INTCON register must set.

Upon entering Sleep mode, the device will be ready to accept clocks on TX/CK pin and transmit data on the RX/DT pin. When the data word in the TSR has been completely clocked out by the external device, the pending byte in the TXREG will transfer to the TSR and the TXIF flag will be set. Thereby, waking the processor from Sleep. At this point, the TXREG is available to accept another character for transmission, which will clear the TXIF flag.

Upon waking from Sleep, the instruction following the SLEEP instruction will be executed. If the Global Interrupt Enable (GIE) bit is also set then the Interrupt Service Routine at address 0004h will be called.

27.6.3 ALTERNATE PIN LOCATIONS

This module incorporates I/O pins that can be moved to other locations with the use of the alternate pin function register, APFCON. To determine which pins can be moved and what their default locations are upon a Reset, see **Section 13.1 "Alternate Pin Function"** for more information.

28.0 IN-CIRCUIT SERIAL PROGRAMMING™ (ICSP™)

ICSP™ programming allows customers to manufacture circuit boards with unprogrammed devices. Programming can be done after the assembly process, allowing the device to be programmed with the most recent firmware or a custom firmware. Five pins are needed for ICSP™ programming:

- ICSPCLK
- ICSPDAT
- $\overline{\text{MCLR}}$/VPP
- VDD
- VSS

In Program/Verify mode the program memory, user IDs and the Configuration Words are programmed through serial communications. The ICSPDAT pin is a bidirectional I/O used for transferring the serial data and the ICSPCLK pin is the clock input. For more information on ICSP™ refer to the **"***PIC16(L)F178X Memory Programming Specification***"** (DS41457).

28.1 High-Voltage Programming Entry Mode

The device is placed into High-Voltage Programming Entry mode by holding the ICSPCLK and ICSPDAT pins low then raising the voltage on $\overline{\text{MCLR}}$/VPP to VIHH.

28.2 Low-Voltage Programming Entry Mode

The Low-Voltage Programming Entry mode allows the PIC® Flash MCUs to be programmed using VDD only, without high voltage. When the LVP bit of Configuration Words is set to '1', the low-voltage ICSP programming entry is enabled. To disable the Low-Voltage ICSP mode, the LVP bit must be programmed to '0'.

Entry into the Low-Voltage Programming Entry mode requires the following steps:

1. $\overline{\text{MCLR}}$ is brought to VIL.
2. A 32-bit key sequence is presented on ICSPDAT, while clocking ICSPCLK.

Once the key sequence is complete, $\overline{\text{MCLR}}$ must be held at VIL for as long as Program/Verify mode is to be maintained.

If low-voltage programming is enabled (LVP = 1), the $\overline{\text{MCLR}}$ Reset function is automatically enabled and cannot be disabled. See **Section 5.5 "MCLR"** for more information.

The LVP bit can only be reprogrammed to '0' by using the High-Voltage Programming mode.

28.3 Common Programming Interfaces

Connection to a target device is typically done through an ICSP™ header. A commonly found connector on development tools is the RJ-11 in the 6P6C (6-pin, 6 connector) configuration. See Figure 28-1.

FIGURE 28-1: ICD RJ-11 STYLE CONNECTOR INTERFACE

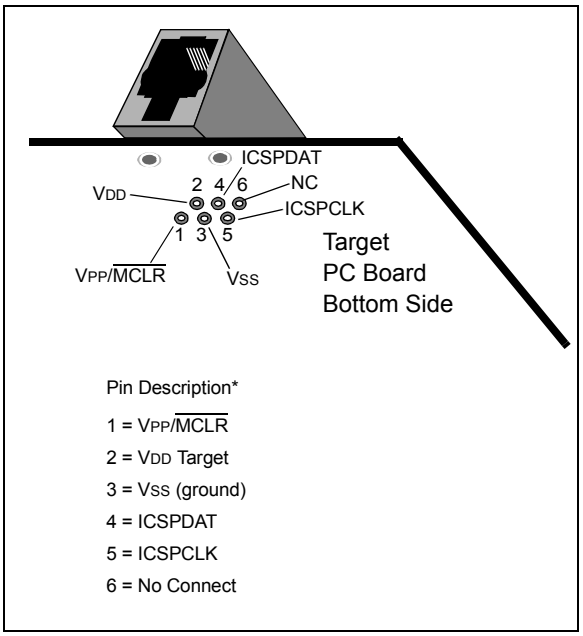

Another connector often found in use with the PICkit™ programmers is a standard 6-pin header with 0.1 inch spacing. Refer to Figure 28-2.

For additional interface recommendations, refer to your specific device programmer manual prior to PCB design.

It is recommended that isolation devices be used to separate the programming pins from other circuitry. The type of isolation is highly dependent on the specific application and may include devices such as resistors, diodes, or even jumpers. See Figure 28-3 for more information.

© 2012-2014 Microchip Technology Inc.

FIGURE 28-2: PICkit™ PROGRAMMER STYLE CONNECTOR INTERFACE

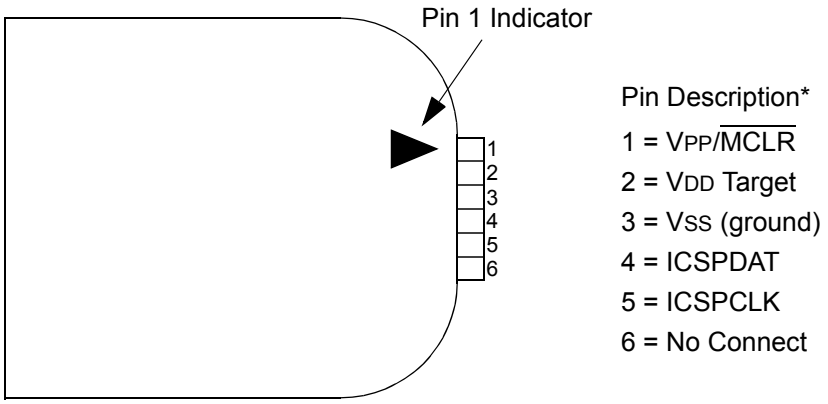

* The 6-pin header (0.100" spacing) accepts 0.025" square pins.

FIGURE 28-3: TYPICAL CONNECTION FOR ICSP™ PROGRAMMING

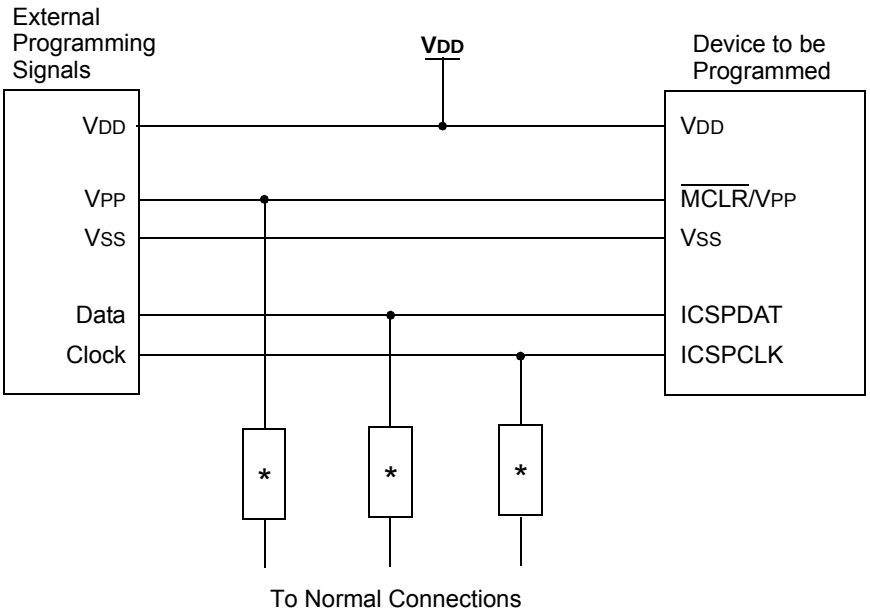

* Isolation devices (as required).

29.0 INSTRUCTION SET SUMMARY

Each instruction is a 14-bit word containing the operation code (opcode) and all required operands. The opcodes are broken into three broad categories.

- Byte Oriented
- Bit Oriented
- Literal and Control

The literal and control category contains the most varied instruction word format.

Table 29-3 lists the instructions recognized by the MPASM™ assembler.

All instructions are executed within a single instruction cycle, with the following exceptions, which may take two or three cycles:

- Subroutine takes two cycles (CALL, CALLW)
- Returns from interrupts or subroutines take two cycles (RETURN, RETLW, RETFIE)
- Program branching takes two cycles (GOTO, BRA, BRW, BTFSS, BTFSC, DECFSZ, INCSFZ)
- One additional instruction cycle will be used when any instruction references an indirect file register and the file select register is pointing to program memory.

One instruction cycle consists of 4 oscillator cycles; for an oscillator frequency of 4 MHz, this gives a nominal instruction execution rate of 1 MHz.

All instruction examples use the format '0xhh' to represent a hexadecimal number, where 'h' signifies a hexadecimal digit.

TABLE 29-1: OPCODE FIELD DESCRIPTIONS

Field	Description
f	Register file address (0x00 to 0x7F)
W	Working register (accumulator)
b	Bit address within an 8-bit file register
k	Literal field, constant data or label
x	Don't care location (= 0 or 1). The assembler will generate code with x = 0. It is the recommended form of use for compatibility with all Microchip software tools.
d	Destination select; d = 0: store result in W, d = 1: store result in file register f. Default is d = 1.
n	FSR or INDF number. (0-1)
mm	Pre-post increment-decrement mode selection

TABLE 29-2: ABBREVIATION DESCRIPTIONS

Field	Description
PC	Program Counter
$\overline{TO}$	Time-Out bit
C	Carry bit
DC	Digit Carry bit
Z	Zero bit
PD	Power-Down bit

29.1 Read-Modify-Write Operations

Any instruction that specifies a file register as part of the instruction performs a Read-Modify-Write (R-M-W) operation. The register is read, the data is modified, and the result is stored according to either the instruction, or the destination designator 'd'. A read operation is performed on a register even if the instruction writes to that register.

© 2012-2014 Microchip Technology Inc.

FIGURE 29-1: GENERAL FORMAT FOR INSTRUCTIONS

Byte-oriented file register operations

13 – 8	7	6 – 0
OPCODE	d	f (FILE #)

d = 0 for destination W
d = 1 for destination f
f = 7-bit file register address

Bit-oriented file register operations

13 – 10	9 – 7	6 – 0
OPCODE	b (BIT #)	f (FILE #)

b = 3-bit bit address
f = 7-bit file register address

Literal and control operations

General

13 – 8	7 – 0
OPCODE	k (literal)

k = 8-bit immediate value

`CALL` and `GOTO` instructions only

13 – 11	10 – 0
OPCODE	k (literal)

k = 11-bit immediate value

MOVLP instruction only

13 – 7	6 – 0
OPCODE	k (literal)

k = 7-bit immediate value

MOVLB instruction only

13 – 5	4 – 0
OPCODE	k (literal)

k = 5-bit immediate value

BRA instruction only

13 – 9	8 – 0
OPCODE	k (literal)

k = 9-bit immediate value

FSR Offset instructions

13 – 7	6	5 – 0
OPCODE	n	k (literal)

n = appropriate FSR
k = 6-bit immediate value

FSR Increment instructions

13 – 3	2	1 – 0
OPCODE	n	m (mode)

n = appropriate FSR
m = 2-bit mode value

OPCODE only

13 – 0
OPCODE

TABLE 29-3: ENHANCED MID-RANGE INSTRUCTION SET

Mnemonic, Operands		Description	Cycles	14-Bit Opcode MSb			LSb	Status Affected	Notes
BYTE-ORIENTED FILE REGISTER OPERATIONS									
ADDWF	f, d	Add W and f	1	00	0111	dfff	ffff	C, DC, Z	2
ADDWF	f, d	Add with Carry W and f	1	11	1101	dfff	ffff	C, DC, Z	2
C	f, d	AND W with f	1	00	0101	dfff	ffff	Z	2
ANDWF	f, d	Arithmetic Right Shift	1	11	0111	dfff	ffff	C, Z	2
ASRF	f, d	Logical Left Shift	1	11	0101	dfff	ffff	C, Z	2
LSLF	f, d	Logical Right Shift	1	11	0110	dfff	ffff	C, Z	2
LSRF	f	Clear f	1	00	0001	lfff	ffff	C, Z	2
CLRF	–	Clear W	1	00	0001	0000	00xx	Z	
CLRW	f, d	Complement f	1	00	1001	dfff	ffff	Z	
COMF	f, d	Decrement f	1	00	0011	dfff	ffff	Z	2
DECF	f, d	Increment f	1	00	1010	dfff	ffff	Z	2
INCF	f, d	Inclusive OR W with f	1	00	0100	dfff	ffff	Z	2
IORWF	f, d	Move f	1	00	1000	dfff	ffff	Z	2
MOVF	f	Move W to f	1	00	0000	1fff	ffff	Z	2
MOVWF	f, d	Rotate Left f through Carry	1	00	1101	dfff	ffff		2
RLF	f, d	Rotate Right f through Carry	1	00	1100	dfff	ffff		2
RRF	f, d	Subtract W from f	1	00	0010	dfff	ffff	C	2
SUBWF	f, d	Subtract with Borrow W from f	1	11	1011	dfff	ffff	C	2
SUB-	f, d	Swap nibbles in f	1	00	1110	dfff	ffff	C, DC, Z	2
WFB	f, d	Exclusive OR W with f	1	00	0110	dfff	ffff	C, DC, Z	2
SWAPF									2
XORWF								Z	2
BYTE ORIENTED SKIP OPERATIONS									
DECFSZ	f, d	Decrement f, Skip if 0	1(2)	00	1011	dfff	ffff		1, 2
INCFSZ	f, d	Increment f, Skip if 0	1(2)	00	1111	dfff	ffff		1, 2
BIT-ORIENTED FILE REGISTER OPERATIONS									
BCF	f, b	Bit Clear f	1	01	00bb	bfff	ffff		2
BSF	f, b	Bit Set f	1	01	01bb	bfff	ffff		2
BIT-ORIENTED SKIP OPERATIONS									
BTFSC	f, b	Bit Test f, Skip if Clear	1 (2)	01	10bb	bfff	ffff		1, 2
BTFSS	f, b	Bit Test f, Skip if Set	1 (2)	01	11bb	bfff	ffff		1, 2
LITERAL OPERATIONS									
ADDLW	k	Add literal and W	1	11	1110	kkkk	kkkk	C, DC, Z	
ANDLW	k	AND literal with W	1	11	1001	kkkk	kkkk	Z	
IORLW	k	Inclusive OR literal with W	1	11	1000	kkkk	kkkk	Z	
MOVLB	k	Move literal to BSR	1	00	0000	001k	kkkk		
MOVLP	k	Move literal to PCLATH	1	11	0001	1kkk	kkkk		
MOVLW	k	Move literal to W	1	11	0000	kkkk	kkkk		
SUBLW	k	Subtract W from literal	1	11	1100	kkkk	kkkk	C, DC, Z	
XORLW	k	Exclusive OR literal with W	1	11	1010	kkkk	kkkk	Z	

Note 1: If the Program Counter (PC) is modified, or a conditional test is true, the instruction requires two cycles. The second cycle is executed as a NOP.

2: If this instruction addresses an INDF register and the MSb of the corresponding FSR is set, this instruction will require one additional instruction cycle.

© 2012-2014 Microchip Technology Inc.

TABLE 29-4: ENHANCED MID-RANGE INSTRUCTION SET (CONTINUED)

Mnemonic, Operands		Description	Cycles	14-Bit Opcode MSb			LSb	Status Affected	Notes
CONTROL OPERATIONS									
BRA	k	Relative Branch	2	11	001k	kkkk	kkkk		
BRW	–	Relative Branch with W	2	00	0000	0000	1011		
CALL	k	Call Subroutine	2	10	0kkk	kkkk	kkkk		
CALLW	–	Call Subroutine with W	2	00	0000	0000	1010		
GOTO	k	Go to address	2	10	1kkk	kkkk	kkkk		
RETFIE	k	Return from interrupt	2	00	0000	0000	1001		
RETLW	k	Return with literal in W	2	11	0100	kkkk	kkkk		
RETURN	–	Return from Subroutine	2	00	0000	0000	1000		
INHERENT OPERATIONS									
CLRWDT	–	Clear Watchdog Timer	1	00	0000	0110	0100	$\overline{TO}$, $\overline{PD}$	
NOP	–	No Operation	1	00	0000	0000	0000		
OPTION	–	Load OPTION_REG register with W	1	00	0000	0110	0010		
RESET	–	Software device Reset	1	00	0000	0000	0001		
SLEEP	–	Go into Standby mode	1	00	0000	0110	0011	$\overline{TO}$, $\overline{PD}$	
TRIS	f	Load TRIS register with W	1	00	0000	0110	0fff		
C-COMPILER OPTIMIZED									
ADDFSR	n, k	Add Literal k to FSRn	1	11	0001	0nkk	kkkk		
MOVIW	n mm	Move Indirect FSRn to W with pre/post inc/dec modifier, mm	1	00	0000	0001	0nmm	Z	2, 3
	k[n]	Move INDFn to W, Indexed Indirect.	1	11	1111	0nkk	kkkk	Z	2
MOVWI	n mm	Move W to Indirect FSRn with pre/post inc/dec modifier, mm	1	00	0000	0001	1nmm		2, 3
	k[n]	Move W to INDFn, Indexed Indirect.	1	11	1111	1nkk	kkkk		2

Note 1: If the Program Counter (PC) is modified, or a conditional test is true, the instruction requires two cycles. The second cycle is executed as a `NOP`.

2: If this instruction addresses an INDF register and the MSb of the corresponding FSR is set, this instruction will require one additional instruction cycle.

3: See Table in the MOVIW and MOVWI instruction descriptions.

29.2 Instruction Descriptions

ADDFSR	**Add Literal to FSRn**
Syntax:	[*label*] ADDFSR FSRn, k
Operands:	$-32 \le k \le 31$ n Î [0, 1]
Operation:	FSR(n) + k $\rightarrow$ FSR(n)
Status Affected:	None
Description:	The signed 6-bit literal ‘k’ is added to the contents of the FSRnH:FSRnL register pair. FSRn is limited to the range 0000h - FFFFh. Moving beyond these bounds will cause the FSR to wrap-around.

ADDLW	Add literal and W
Syntax:	[*label*] ADDLW k
Operands:	$0 \le k \le 255$
Operation:	(W) + k → (W)
Status Affected:	C, DC, Z
Description:	The contents of the W register are added to the 8-bit literal 'k' and the result is placed in the W register.

ADDWF	Add W and f
Syntax:	[*label*] ADDWF f,d
Operands:	$0 \le f \le 127$ $d \in [0,1]$
Operation:	(W) + (f) → (destination)
Status Affected:	C, DC, Z
Description:	Add the contents of the W register with register 'f'. If 'd' is '0', the result is stored in the W register. If 'd' is '1', the result is stored back in register 'f'.

ADDWFC	ADD W and CARRY bit to f
Syntax:	[*label*] ADDWFC f {,d}
Operands:	$0 \le f \le 127$ $d \in [0,1]$
Operation:	(W) + (f) + (C) → dest
Status Affected:	C, DC, Z
Description:	Add W, the Carry flag and data memory location 'f'. If 'd' is '0', the result is placed in W. If 'd' is '1', the result is placed in data memory location 'f'.

ANDLW	AND literal with W
Syntax:	[*label*] ANDLW k
Operands:	$0 \le k \le 255$
Operation:	(W) .AND. (k) → (W)
Status Affected:	Z
Description:	The contents of W register are AND'ed with the 8-bit literal 'k'. The result is placed in the W register.

ANDWF	AND W with f
Syntax:	[*label*] ANDWF f,d
Operands:	$0 \le f \le 127$ $d \in [0,1]$
Operation:	(W) .AND. (f) → (destination)
Status Affected:	Z
Description:	AND the W register with register 'f'. If 'd' is '0', the result is stored in the W register. If 'd' is '1', the result is stored back in register 'f'.

ASRF	Arithmetic Right Shift
Syntax:	[*label*] ASRF f {,d}
Operands:	$0 \le f \le 127$ $d \in [0,1]$
Operation:	(f<7>)→ dest<7> (f<7:1>) → dest<6:0>, (f<0>) → C,
Status Affected:	C, Z
Description:	The contents of register 'f' are shifted one bit to the right through the Carry flag. The MSb remains unchanged. If 'd' is '0', the result is placed in W. If 'd' is '1', the result is stored back in register 'f'.

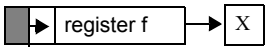

© 2012-2014 Microchip Technology Inc.

BCF	Bit Clear f
Syntax:	[*label*] BCF f,b
Operands:	$0 \le f \le 127$ $0 \le b \le 7$
Operation:	0 → (f<b>)
Status Affected:	None
Description:	Bit ‘b’ in register ‘f’ is cleared.

BRA	Relative Branch
Syntax:	[*label*] BRA label [*label*] BRA $+k
Operands:	$-256 \le$ label - PC + 1 ≤ 255 $-256 \le k \le 255$
Operation:	(PC) + 1 + k → PC
Status Affected:	None
Description:	Add the signed 9-bit literal ‘k’ to the PC. Since the PC will have incremented to fetch the next instruction, the new address will be PC + 1 + k. This instruction is a 2-cycle instruction. This branch has a limited range.

BRW	Relative Branch with W
Syntax:	[*label*] BRW
Operands:	None
Operation:	(PC) + (W) → PC
Status Affected:	None
Description:	Add the contents of W (unsigned) to the PC. Since the PC will have incremented to fetch the next instruction, the new address will be PC + 1 + (W). This instruction is a 2-cycle instruction.

BSF	Bit Set f
Syntax:	[*label*] BSF f,b
Operands:	$0 \le f \le 127$ $0 \le b \le 7$
Operation:	1 → (f<b>)
Status Affected:	None
Description:	Bit ‘b’ in register ‘f’ is set.

BTFSC	Bit Test f, Skip if Clear
Syntax:	[*label*] BTFSC f,b
Operands:	$0 \le f \le 127$ $0 \le b \le 7$
Operation:	skip if (f<b>) = 0
Status Affected:	None
Description:	If bit ‘b’ in register ‘f’ is ‘1’, the next instruction is executed. If bit ‘b’, in register ‘f’, is ‘0’, the next instruction is discarded, and a NOP is executed instead, making this a 2-cycle instruction.

BTFSS	Bit Test f, Skip if Set
Syntax:	[*label*] BTFSS f,b
Operands:	$0 \le f \le 127$ $0 \le b < 7$
Operation:	skip if (f<b>) = 1
Status Affected:	None
Description:	If bit ‘b’ in register ‘f’ is ‘0’, the next instruction is executed. If bit ‘b’ is ‘1’, then the next instruction is discarded and a NOP is executed instead, making this a 2-cycle instruction.

CALL	Call Subroutine
Syntax:	[*label*] CALL k
Operands:	$0 \le k \le 2047$
Operation:	(PC)+ 1→ TOS, k → PC<10:0>, (PCLATH<6:3>) → PC<14:11>
Status Affected:	None
Description:	Call Subroutine. First, return address (PC + 1) is pushed onto the stack. The 11-bit immediate address is loaded into PC bits <10:0>. The upper bits of the PC are loaded from PCLATH. `CALL` is a 2-cycle instruction.

CALLW	Subroutine Call With W
Syntax:	[*label*] CALLW
Operands:	None
Operation:	(PC) +1 → TOS, (W) → PC<7:0>, (PCLATH<6:0>) → PC<14:8>
Status Affected:	None
Description:	Subroutine call with W. First, the return address (PC + 1) is pushed onto the return stack. Then, the contents of W is loaded into PC<7:0>, and the contents of PCLATH into PC<14:8>. `CALLW` is a 2-cycle instruction.

CLRF	Clear f
Syntax:	[*label*] CLRF f
Operands:	$0 \le f \le 127$
Operation:	00h → (f) `1` → Z
Status Affected:	Z
Description:	The contents of register ‘f’ are cleared and the Z bit is set.

CLRW	Clear W
Syntax:	[*label*] CLRW
Operands:	None
Operation:	00h → (W) `1` → Z
Status Affected:	Z
Description:	W register is cleared. Zero bit (Z) is set.

CLRWDT	Clear Watchdog Timer
Syntax:	[*label*] CLRWDT
Operands:	None
Operation:	00h → WDT `0` → WDT prescaler, 1 → $\overline{TO}$ 1 → $\overline{PD}$
Status Affected:	$\overline{TO}$, $\overline{PD}$
Description:	`CLRWDT` instruction resets the Watchdog Timer. It also resets the prescaler of the WDT. Status bits $\overline{TO}$ and $\overline{PD}$ are set.

COMF	Complement f
Syntax:	[*label*] COMF f,d
Operands:	$0 \le f \le 127$ d ∈ [`0`,`1`]
Operation:	($\bar{f}$) → (destination)
Status Affected:	Z
Description:	The contents of register ‘f’ are complemented. If ‘d’ is ‘`0`’, the result is stored in W. If ‘d’ is ‘`1`’, the result is stored back in register ‘f’.

DECF	Decrement f
Syntax:	[*label*] DECF f,d
Operands:	$0 \le f \le 127$ d ∈ [`0`,`1`]
Operation:	(f) - 1 → (destination)
Status Affected:	Z
Description:	Decrement register ‘f’. If ‘d’ is ‘`0`’, the result is stored in the W register. If ‘d’ is ‘`1`’, the result is stored back in register ‘f’.

© 2012-2014 Microchip Technology Inc.

DECFSZ	Decrement f, Skip if 0
Syntax:	[*label*] DECFSZ f,d
Operands:	$0 \le f \le 127$ $d \in [0,1]$
Operation:	(f) - 1 → (destination); skip if result = 0
Status Affected:	None
Description:	The contents of register 'f' are decremented. If 'd' is '0', the result is placed in the W register. If 'd' is '1', the result is placed back in register 'f'. If the result is '1', the next instruction is executed. If the result is '0', then a NOP is executed instead, making it a 2-cycle instruction.

GOTO	Unconditional Branch
Syntax:	[*label*] GOTO k
Operands:	$0 \le k \le 2047$
Operation:	k → PC<10:0> PCLATH<6:3> → PC<14:11>
Status Affected:	None
Description:	GOTO is an unconditional branch. The 11-bit immediate value is loaded into PC bits <10:0>. The upper bits of PC are loaded from PCLATH<4:3>. GOTO is a 2-cycle instruction.

INCF	Increment f
Syntax:	[*label*] INCF f,d
Operands:	$0 \le f \le 127$ $d \in [0,1]$
Operation:	(f) + 1 → (destination)
Status Affected:	Z
Description:	The contents of register 'f' are incremented. If 'd' is '0', the result is placed in the W register. If 'd' is '1', the result is placed back in register 'f'.

INCFSZ	Increment f, Skip if 0
Syntax:	[*label*] INCFSZ f,d
Operands:	$0 \le f \le 127$ $d \in [0,1]$
Operation:	(f) + 1 → (destination), skip if result = 0
Status Affected:	None
Description:	The contents of register 'f' are incremented. If 'd' is '0', the result is placed in the W register. If 'd' is '1', the result is placed back in register 'f'. If the result is '1', the next instruction is executed. If the result is '0', a NOP is executed instead, making it a 2-cycle instruction.

IORLW	Inclusive OR literal with W
Syntax:	[*label*] IORLW k
Operands:	$0 \le k \le 255$
Operation:	(W) .OR. k → (W)
Status Affected:	Z
Description:	The contents of the W register are OR'ed with the 8-bit literal 'k'. The result is placed in the W register.

IORWF	Inclusive OR W with f
Syntax:	[*label*] IORWF f,d
Operands:	$0 \le f \le 127$ $d \in [0,1]$
Operation:	(W) .OR. (f) → (destination)
Status Affected:	$\overline{Z}$
Description:	Inclusive OR the W register with register 'f'. If 'd' is '0', the result is placed in the W register. If 'd' is '1', the result is placed back in register 'f'.

LSLF	**Logical Left Shift**
Syntax:	[*label*] LSLF f {,d}
Operands:	$0 \le f \le 127$ $d \in [0,1]$
Operation:	(f<7>) → C (f<6:0>) → dest<7:1> 0 → dest<0>
Status Affected:	C, Z
Description:	The contents of register 'f' are shifted one bit to the left through the Carry flag. A '0' is shifted into the LSb. If 'd' is '0', the result is placed in W. If 'd' is '1', the result is stored back in register 'f'.

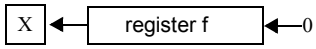

LSRF	**Logical Right Shift**
Syntax:	[*label*] LSRF f {,d}
Operands:	$0 \le f \le 127$ $d \in [0,1]$
Operation:	0 → dest<7> (f<7:1>) → dest<6:0>, (f<0>) → C,
Status Affected:	C, Z
Description:	The contents of register 'f' are shifted one bit to the right through the Carry flag. A '0' is shifted into the MSb. If 'd' is '0', the result is placed in W. If 'd' is '1', the result is stored back in register 'f'.

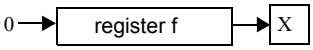

MOVF	**Move f**
Syntax:	[*label*] MOVF f,d
Operands:	$0 \le f \le 127$ $d \in [0,1]$
Operation:	(f) → (dest)
Status Affected:	Z
Description:	The contents of register f is moved to a destination dependent upon the status of d. If d = 0, destination is W register. If d = 1, the destination is file register f itself. d = 1 is useful to test a file register since status flag Z is affected.
Words:	1
Cycles:	1
Example:	`MOVF FSR, 0` After Instruction W = value in FSR register Z = 1

© 2012-2014 Microchip Technology Inc.

MOVIW **Move INDFn to W**

Syntax: [*label*] MOVIW ++FSRn
[*label*] MOVIW --FSRn
[*label*] MOVIW FSRn++
[*label*] MOVIW FSRn--
[*label*] MOVIW k[FSRn]

Operands: n ∈ [0,1]
mm ∈ [00,01, 10, 11]
-32 ≤ k ≤ 31

Operation: INDFn → W
Effective address is determined by
- FSR + 1 (preincrement)
- FSR - 1 (predecrement)
- FSR + k (relative offset)

After the Move, the FSR value will be either:
- FSR + 1 (all increments)
- FSR - 1 (all decrements)
- Unchanged

Status Affected: Z

Mode	Syntax	mm
Preincrement	++FSRn	00
Predecrement	--FSRn	01
Postincrement	FSRn++	10
Postdecrement	FSRn--	11

Description: This instruction is used to move data between W and one of the indirect registers (INDFn). Before/after this move, the pointer (FSRn) is updated by pre/post incrementing/decrementing it.

Note: The INDFn registers are not physical registers. Any instruction that accesses an INDFn register actually accesses the register at the address specified by the FSRn.

FSRn is limited to the range 0000h - FFFFh. Incrementing/decrementing it beyond these bounds will cause it to wrap-around.

MOVLB **Move literal to BSR**

Syntax: [*label*] MOVLB k

Operands: 0 ≤ k ≤ 31

Operation: k → BSR

Status Affected: None

Description: The 5-bit literal ‘k’ is loaded into the Bank Select Register (BSR).

MOVLP **Move literal to PCLATH**

Syntax: [*label*] MOVLP k

Operands: 0 ≤ k ≤ 127

Operation: k → PCLATH

Status Affected: None

Description: The 7-bit literal ‘k’ is loaded into the PCLATH register.

MOVLW **Move literal to W**

Syntax: [*label*] MOVLW k

Operands: 0 ≤ k ≤ 255

Operation: k → (W)

Status Affected: None

Description: The 8-bit literal ‘k’ is loaded into W register. The “don’t cares” will assemble as ‘0’s.

Words: 1

Cycles: 1

Example:
```
MOVLW    0x5A
```
After Instruction
```
W    =    0x5A
```

MOVWF **Move W to f**

Syntax: [*label*] MOVWF f

Operands: 0 ≤ f ≤ 127

Operation: (W) → (f)

Status Affected: None

Description: Move data from W register to register ‘f’.

Words: 1

Cycles: 1

Example:
```
MOVWF   OPTION_REG
```
Before Instruction
```
OPTION_REG  =  0xFF
W           =  0x4F
```
After Instruction
```
OPTION_REG  =  0x4F
W           =  0x4F
```

MOVWI	Move W to INDFn
Syntax:	[*label*] MOVWI ++FSRn [*label*] MOVWI --FSRn [*label*] MOVWI FSRn++ [*label*] MOVWI FSRn-- [*label*] MOVWI k[FSRn]
Operands:	n ∈ [0,1] mm ∈ [00,01, 10, 11] -32 ≤ k ≤ 31
Operation:	W → INDFn Effective address is determined by • FSR + 1 (preincrement) • FSR - 1 (predecrement) • FSR + k (relative offset) After the Move, the FSR value will be either: • FSR + 1 (all increments) • FSR - 1 (all decrements) Unchanged
Status Affected:	None

Mode	Syntax	mm
Preincrement	++FSRn	00
Predecrement	--FSRn	01
Postincrement	FSRn++	10
Postdecrement	FSRn--	11

Description: This instruction is used to move data between W and one of the indirect registers (INDFn). Before/after this move, the pointer (FSRn) is updated by pre/post incrementing/decrementing it.

Note: The INDFn registers are not physical registers. Any instruction that accesses an INDFn register actually accesses the register at the address specified by the FSRn.

FSRn is limited to the range 0000h - FFFFh. Incrementing/decrementing it beyond these bounds will cause it to wrap-around.

The increment/decrement operation on FSRn WILL NOT affect any Status bits.

NOP	No Operation
Syntax:	[*label*] NOP
Operands:	None
Operation:	No operation
Status Affected:	None
Description:	No operation.
Words:	1
Cycles:	1
Example:	`NOP`

OPTION	Load OPTION_REG Register with W
Syntax:	[*label*] OPTION
Operands:	None
Operation:	(W) → OPTION_REG
Status Affected:	None
Description:	Move data from W register to OPTION_REG register.

RESET	Software Reset
Syntax:	[*label*] RESET
Operands:	None
Operation:	Execute a device Reset. Resets the $\overline{RI}$ flag of the PCON register.
Status Affected:	None
Description:	This instruction provides a way to execute a hardware Reset by software.

© 2012-2014 Microchip Technology Inc.

RETFIE	Return from Interrupt
Syntax:	[*label*] RETFIE
Operands:	None
Operation:	TOS → PC, 1 → GIE
Status Affected:	None
Description:	Return from Interrupt. Stack is POPed and Top-of-Stack (TOS) is loaded in the PC. Interrupts are enabled by setting Global Interrupt Enable bit, GIE (INTCON<7>). This is a 2-cycle instruction.
Words:	1
Cycles:	2
Example:	`RETFIE` After Interrupt PC = TOS GIE = 1

RETLW	Return with literal in W
Syntax:	[*label*] RETLW k
Operands:	$0 \le k \le 255$
Operation:	k → (W); TOS → PC
Status Affected:	None
Description:	The W register is loaded with the 8-bit literal 'k'. The program counter is loaded from the top of the stack (the return address). This is a 2-cycle instruction.
Words:	1
Cycles:	2

Example:	`CALL TABLE;W contains table`
	`;offset value`
	TABLE `;W now has table value`
	•
	•
	`ADDWF PC ;W = offset`
	`RETLW k1 ;Begin table`
	`RETLW k2 ;`
	•
	•
	•
	`RETLW kn ; End of table`
	
	Before Instruction
	W = 0x07
	After Instruction
	W = value of k8

RETURN	Return from Subroutine
Syntax:	[*label*] RETURN
Operands:	None
Operation:	TOS → PC
Status Affected:	None
Description:	Return from subroutine. The stack is POPed and the top of the stack (TOS) is loaded into the program counter. This is a 2-cycle instruction.

RLF	Rotate Left f through Carry
Syntax:	[*label*] RLF f,d
Operands:	$0 \le f \le 127$ $d \in [0,1]$
Operation:	See description below
Status Affected:	C
Description:	The contents of register 'f' are rotated one bit to the left through the Carry flag. If 'd' is '0', the result is placed in the W register. If 'd' is '1', the result is stored back in register 'f'. 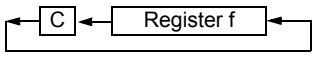
Words:	1
Cycles:	1
Example:	`RLF REG1,0` Before Instruction REG1 = 1110 0110 C = 0 After Instruction REG1 = 1110 0110 W = 1100 1100 C = 1

RRF	Rotate Right f through Carry
Syntax:	[*label*] RRF f,d
Operands:	$0 \le f \le 127$ $d \in [0,1]$
Operation:	See description below
Status Affected:	C
Description:	The contents of register 'f' are rotated one bit to the right through the Carry flag. If 'd' is '0', the result is placed in the W register. If 'd' is '1', the result is placed back in register 'f'.

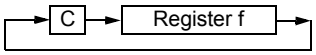

SLEEP	Enter Sleep mode
Syntax:	[*label*] SLEEP
Operands:	None
Operation:	00h → WDT, 0 → WDT prescaler, 1 → $\overline{TO}$, 0 → $\overline{PD}$
Status Affected:	$\overline{TO}$, $\overline{PD}$
Description:	The power-down Status bit, $\overline{PD}$ is cleared. Time-out Status bit, $\overline{TO}$ is set. Watchdog Timer and its prescaler are cleared. The processor is put into Sleep mode with the oscillator stopped.

SUBLW	Subtract W from literal
Syntax:	[*label*] SUBLW k
Operands:	$0 \le k \le 255$
Operation:	k - (W) → (W)
Status Affected:	C, DC, Z
Description:	The W register is subtracted (2's complement method) from the 8-bit literal 'k'. The result is placed in the W register.

C = 0	W > k
C = 1	W ≤ k
DC = 0	W<3:0> > k<3:0>
DC = 1	W<3:0> ≤ k<3:0>

SUBWF	Subtract W from f
Syntax:	[*label*] SUBWF f,d
Operands:	$0 \le f \le 127$ $d \in [0,1]$
Operation:	(f) - (W) → (destination)
Status Affected:	C, DC, Z
Description:	Subtract (2's complement method) W register from register 'f'. If 'd' is '0', the result is stored in the W register. If 'd' is '1', the result is stored back in register 'f.

C = 0	W > f
C = 1	W ≤ f
DC = 0	W<3:0> > f<3:0>
DC = 1	W<3:0> ≤ f<3:0>

SUBWFB	Subtract W from f with Borrow
Syntax:	SUBWFB f {,d}
Operands:	$0 \le f \le 127$ $d \in [0,1]$
Operation:	(f) – (W) – ($\overline{B}$) → dest
Status Affected:	C, DC, Z
Description:	Subtract W and the BORROW flag (CARRY) from register 'f' (2's complement method). If 'd' is '0', the result is stored in W. If 'd' is '1', the result is stored back in register 'f'.

SWAPF	Swap Nibbles in f
Syntax:	[*label*] SWAPF f,d
Operands:	$0 \le f \le 127$ $d \in [0,1]$
Operation:	(f<3:0>) → (destination<7:4>), (f<7:4>) → (destination<3:0>)
Status Affected:	None
Description:	The upper and lower nibbles of register 'f' are exchanged. If 'd' is '0', the result is placed in the W register. If 'd' is '1', the result is placed in register 'f'.

© 2012-2014 Microchip Technology Inc.

TRIS	Load TRIS Register with W
Syntax:	[*label*] TRIS f
Operands:	$5 \le f \le 7$
Operation:	(W) → TRIS register ‘f’
Status Affected:	None
Description:	Move data from W register to TRIS register. When ‘f’ = 5, TRISA is loaded. When ‘f’ = 6, TRISB is loaded. When ‘f’ = 7, TRISC is loaded.

XORLW	Exclusive OR literal with W
Syntax:	[*label*] XORLW k
Operands:	$0 \le k \le 255$
Operation:	(W) .XOR. k → (W)
Status Affected:	Z
Description:	The contents of the W register are XOR’ed with the 8-bit literal ‘k’. The result is placed in the W register.

XORWF	Exclusive OR W with f
Syntax:	[*label*] XORWF f,d
Operands:	$0 \le f \le 127$ $d \in [0,1]$
Operation:	(W) .XOR. (f) → (destination)
Status Affected:	Z
Description:	Exclusive OR the contents of the W register with register ‘f’. If ‘d’ is ‘0’, the result is stored in the W register. If ‘d’ is ‘1’, the result is stored back in register ‘f’.

30.0 ELECTRICAL SPECIFICATIONS

30.1 Absolute Maximum Ratings(†)

Ambient temperature under bias ..... -40°C to +125°C
Storage temperature ..... -65°C to +150°C
Voltage on pins with respect to V_{SS}
- on V_{DD} pin
  - PIC16F1784/6/7 ..... -0.3V to +6.5V
  - PIC16LF1784/6/7 ..... -0.3V to +4.0V
- on $\overline{MCLR}$ pin ..... -0.3V to +9.0V
- on all other pins ..... -0.3V to (V_{DD} + 0.3V)

Maximum current
- on V_{SS} pin(1)
  - -40°C ≤ T_A ≤ +85°C ..... 340 mA
  - -40°C ≤ T_A ≤ +125°C ..... 140 mA
- on V_{DD} pin(1)
  - -40°C ≤ T_A ≤ +85°C (PIC16(L)F1786 only) ..... 170 mA
  - -40°C ≤ T_A ≤ +125°C (PIC16(L)F1786 only) ..... 70 mA
  - -40°C ≤ T_A ≤ +85°C ..... 340 mA
  - -40°C ≤ T_A ≤ +125°C ..... 140 mA
- on any I/O pin ..... ±25 mA

Clamp current, I_K (V_{PIN} < 0 or V_{PIN} > V_{DD}) ..... ±20 mA

Note 1: Maximum current rating requires even load distribution across I/O pins. Maximum current rating may be limited by the device package power dissipation characterizations, see **Section 30.4 "Thermal Considerations"** to calculate device specifications.

† NOTICE: Stresses above those listed under "Absolute Maximum Ratings" may cause permanent damage to the device. This is a stress rating only and functional operation of the device at those or any other conditions above those indicated in the operation listings of this specification is not implied. Exposure above maximum rating conditions for extended periods may affect device reliability.

© 2012-2014 Microchip Technology Inc.

30.2 Standard Operating Conditions

The standard operating conditions for any device are defined as:

Operating Voltage: $V_{DDMIN} \leq V_{DD} \leq V_{DDMAX}$
Operating Temperature: $T_{A_MIN} \leq T_A \leq T_{A_MAX}$

V_{DD} — Operating Supply Voltage[(1)]

PIC16LF1784/6/7

V_{DDMIN} (Fosc ≤ 16 MHz) ..... +1.8V
V_{DDMIN} (16 MHz < Fosc ≤ 32 MHz) ..... +2.5V
V_{DDMAX} ..... +3.6V

PIC16F1784/6/7

V_{DDMIN} (Fosc ≤ 16 MHz) ..... +2.3V
V_{DDMIN} (16 MHz < Fosc ≤ 32 MHz) ..... +2.5V
V_{DDMAX} ..... +5.5V

T_A — Operating Ambient Temperature Range

Industrial Temperature

T_{A_MIN} ..... -40°C
T_{A_MAX} ..... +85°C

Extended Temperature

T_{A_MIN} ..... -40°C
T_{A_MAX} ..... +125°C

Note 1: See Parameter D001, DC Characteristics: Supply Voltage.

FIGURE 30-1: PIC16F1784/6/7 VOLTAGE FREQUENCY GRAPH, -40°C ≤ TA ≤ +125°C

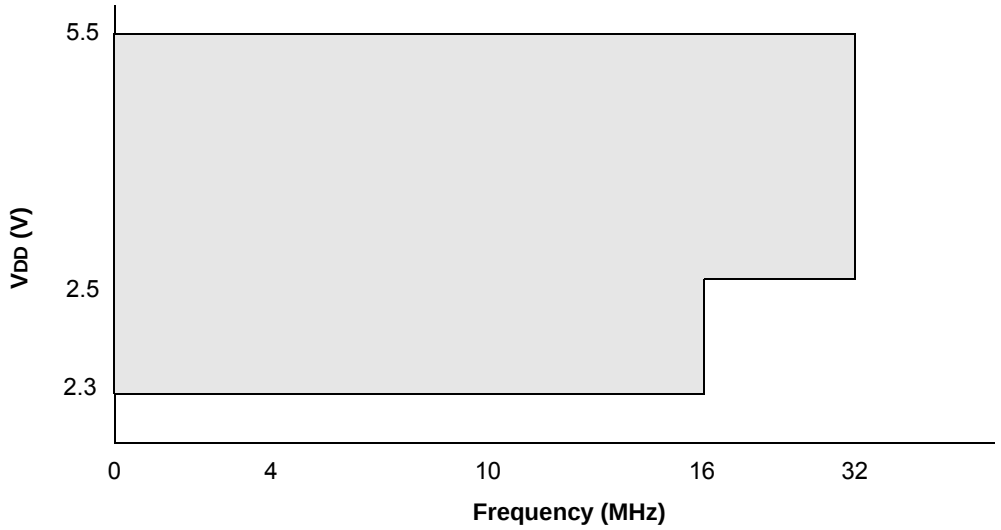

Note 1: The shaded region indicates the permissible combinations of voltage and frequency.
2: Refer to Table 30-6 for each Oscillator mode's supported frequencies.

FIGURE 30-2: PIC16LF1784/6/7 VOLTAGE FREQUENCY GRAPH, -40°C ≤ TA ≤ +125°C

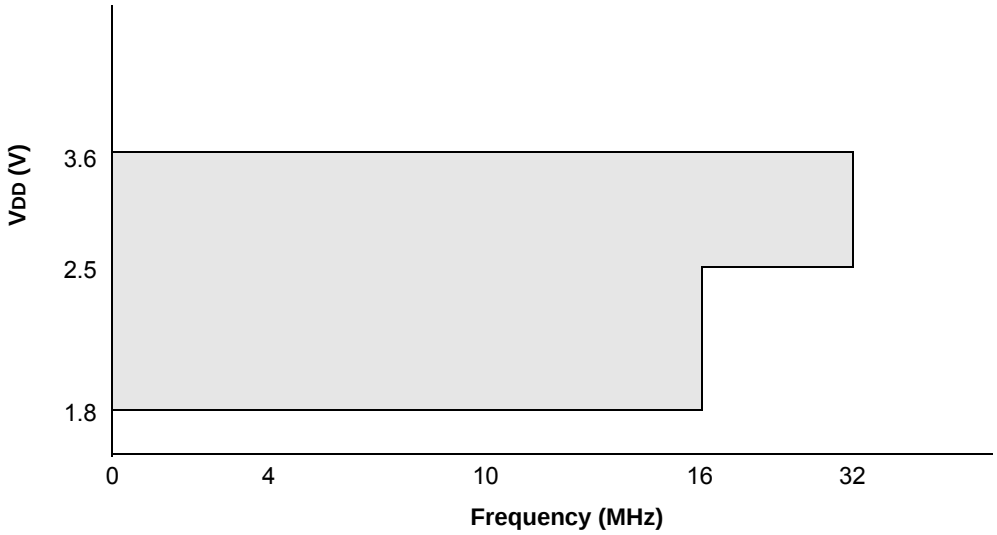

Note 1: The shaded region indicates the permissible combinations of voltage and frequency.
2: Refer to Table 30-6 for each Oscillator mode's supported frequencies.

© 2012-2014 Microchip Technology Inc.

30.3 DC Characteristics

TABLE 30-1: SUPPLY VOLTAGE

PIC16LF1784/6/7			Standard Operating Conditions (unless otherwise stated)				
PIC16F1784/6/7							
Param. No.	Sym.	Characteristic	Min.	Typ†	Max.	Units	Conditions
D001	VDD	**Supply Voltage (VDDMIN, VDDMAX)**					
			1.8 2.5	— —	3.6 3.6	V V	FOSC ≤ 16 MHz: FOSC ≤ 32 MHz (**Note 2**)
D001			2.3 2.5	— —	5.5 5.5	V V	FOSC ≤ 16 MHz: FOSC ≤ 32 MHz (**Note 2**)
D002*	VDR	**RAM Data Retention Voltage(1)**					
			1.5	—	—	V	Device in Sleep mode
D002*			1.7	—	—	V	Device in Sleep mode
	VPOR*	**Power-on Reset Release Voltage**	—	1.6	—	V	
	VPORR*	**Power-on Reset Rearm Voltage**					
			—	0.8	—	V	Device in Sleep mode
			—	1.5	—	V	Device in Sleep mode
D003	VFVR	**Fixed Voltage Reference Voltage(3)**	-4	—	4	%	1.024V, VDD ≥ 2.5V
			-4	—	4	%	2.048V, VDD ≥ 2.5V
			-5	—	5	%	4.096V, VDD ≥ 4.75V
D004*	SVDD	**VDD Rise Rate** to ensure internal Power-on Reset signal	0.05	—	—	V/ms	See **Section 5.1 "Power-On Reset (POR)"** for details.

* These parameters are characterized but not tested.

† Data in "Typ" column is at 3.3V, 25°C unless otherwise stated. These parameters are for design guidance only and are not tested.

Note 1: This is the limit to which VDD can be lowered in Sleep mode without losing RAM data.

2: PLL required for 32 MHz operation.

3: Industrial temperature range only.

FIGURE 30-3: POR AND POR REARM WITH SLOW RISING VDD

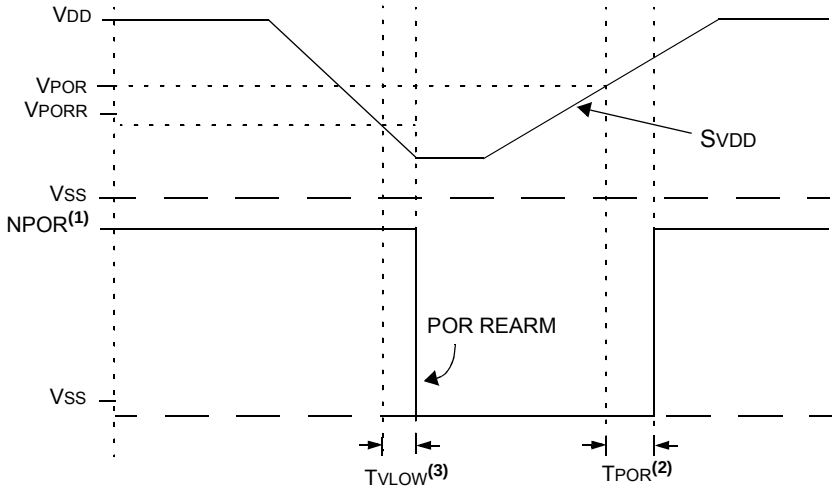

Note 1: When NPOR is low, the device is held in Reset.
2: TPOR 1 μs typical.
3: TVLOW 2.7 μs typical.

© 2012-2014 Microchip Technology Inc.

TABLE 30-2: SUPPLY VOLTAGE (I_{DD})(1,2)

PIC16LF1784/6/7			Standard Operating Conditions (unless otherwise stated)				
PIC16F1784/6/7							
Param No.	Device Characteristics	Min.	Typ†	Max.	Units	Conditions	
						V_{DD}	Note
D009	LDO Regulator	—	75	—	μA	—	High Power mode, normal operation
		—	15	—	μA	—	Sleep VREGCON<1> = 0
		—	0.3	—	μA	—	Sleep VREGCON<1> = 1
D010		—	8	20	μA	1.8	F_{OSC} = 32 kHz LP Oscillator mode **(Note 4)**, -40°C ≤ T_A ≤ +85°C
		—	12	24	μA	3.0	
D010		—	18	63	μA	2.3	F_{OSC} = 32 kHz LP Oscillator mode **(Note 4, 5)**, -40°C ≤ T_A ≤ +85°C
		—	20	74	μA	3.0	
		—	22	79	μA	5.0	
D012		—	160	650	μA	1.8	F_{OSC} = 4 MHz XT Oscillator mode
		—	320	1000	μA	3.0	
D012		—	260	700	μA	2.3	F_{OSC} = 4 MHz XT Oscillator mode **(Note 5)**
		—	330	1100	μA	3.0	
		—	380	1300	μA	5.0	

Note 1: The test conditions for all I_{DD} measurements in active operation mode are: OSC1 = external square wave, from rail-to-rail; all I/O pins tri-stated, pulled to V_{DD}; $\overline{MCLR}$ = V_{DD}; WDT disabled.

2: The supply current is mainly a function of the operating voltage and frequency. Other factors, such as I/O pin loading and switching rate, oscillator type, internal code execution pattern and temperature, also have an impact on the current consumption.

3: For RC oscillator configurations, current through R_{EXT} is not included. The current through the resistor can be extended by the formula $I_R = V_{DD}/2R_{EXT}$ (mA) with R_{EXT} in kΩ.

4: FVR and BOR are disabled.

5: 0.1 μF capacitor on V_{CAP}.

6: 8 MHz crystal oscillator with 4x PLL enabled.

TABLE 30-2: SUPPLY VOLTAGE (I_{DD})(1,2) (CONTINUED)

PIC16LF1784/6/7			Standard Operating Conditions (unless otherwise stated)				
PIC16F1784/6/7							
Param No.	Device Characteristics	Min.	Typ†	Max.	Units	Conditions	
						V_{DD}	Note
D014		—	125	550	μA	1.8	F_{OSC} = 4 MHz EC Oscillator mode Medium-Power mode
		—	280	1100	μA	3.0	
D014		—	220	650	μA	2.3	F_{OSC} = 4 MHz EC Oscillator mode **(Note 5)** Medium-Power mode
		—	290	1000	μA	3.0	
		—	350	1200	μA	5.0	
D015		—	2.1	6.2	mA	3.0	F_{OSC} = 32 MHz EC Oscillator High-Power mode
		—	2.5	7.5	mA	3.6	
D015		—	2.1	6.5	mA	3.0	F_{OSC} = 32 MHz EC Oscillator High-Power mode **(Note 5)**
		—	2.2	7.5	mA	5.0	
D017		—	130	180	μA	1.8	F_{OSC} = 500 kHz MFINTOSC mode
		—	150	250	μA	3.0	
D017		—	150	250	μA	2.3	F_{OSC} = 500 kHz MFINTOSC mode **(Note 5)**
		—	170	330	μA	3.0	
		—	220	430	μA	5.0	
D019		—	0.8	2.2	mA	1.8	F_{OSC} = 16 MHz HFINTOSC mode
		—	1.2	3.7	mA	3.0	
D019		—	1.0	2.3	mA	2.3	F_{OSC} = 16 MHz HFINTOSC mode **(Note 5)**
		—	1.3	3.9	mA	3.0	
		—	1.4	4.1	mA	5.0	
D020		—	2.1	6.2	mA	3.0	F_{OSC} = 32 MHz HFINTOSC mode
		—	2.5	7.5	mA	3.6	
D020		—	2.1	6.5	mA	3.0	F_{OSC} = 32 MHz HFINTOSC mode
		—	2.2	7.5	mA	5.0	
D022		—	2.1	6.2	mA	3.0	F_{OSC} = 32 MHz HS Oscillator mode **(Note 6)**
		—	2.5	7.5	mA	3.6	
D022		—	2.1	6.5	mA	3.0	F_{OSC} = 32 MHz HS Oscillator mode **(Note 5, 6)**
		—	2.2	7.5	mA	5.0	

Note 1: The test conditions for all I_{DD} measurements in active operation mode are: OSC1 = external square wave, from rail-to-rail; all I/O pins tri-stated, pulled to V_{DD}; $\overline{MCLR}$ = V_{DD}; WDT disabled.

2: The supply current is mainly a function of the operating voltage and frequency. Other factors, such as I/O pin loading and switching rate, oscillator type, internal code execution pattern and temperature, also have an impact on the current consumption.

3: For RC oscillator configurations, current through R_{EXT} is not included. The current through the resistor can be extended by the formula $I_R = V_{DD}/2R_{EXT}$ (mA) with R_{EXT} in kΩ.

4: FVR and BOR are disabled.

5: 0.1 μF capacitor on V_{CAP}.

6: 8 MHz crystal oscillator with 4x PLL enabled.

© 2012-2014 Microchip Technology Inc.

TABLE 30-3: POWER-DOWN CURRENTS (I_{PD})(1,2,4)

PIC16LF1784/6/7	Operating Conditions: (unless otherwise stated) Low-Power Sleep Mode							
PIC16F1784/6/7	**Low-Power Sleep Mode, VREGPM = 1**							
Param No.	**Device Characteristics**	**Min.**	**Typ†**	**Max. +85°C**	**Max. +125°C**	**Units**	**Conditions**	
							V_{DD}	**Note**
	Power-down Base Current (I_{PD})(2)							
D023	Base I_{PD}	—	0.05	1.0	8.0	μA	1.8	WDT, BOR, FVR, and T1OSC disabled, all Peripherals Inactive
		—	0.08	2.0	9.0	μA	3.0	
D023	Base I_{PD}	—	0.3	3	11	μA	2.3	WDT, BOR, FVR, and T1OSC disabled, all Peripherals Inactive
		—	0.4	4	12	μA	3.0	
		—	0.5	6	15	μA	5.0	
D023A	Base I_{PD}	—	10	16	18	μA	2.3	WDT, BOR, FVR, and T1OSC disabled, all Peripherals Inactive VREGPM = 0
		—	11	18	20	μA	3.0	
		—	12	21	26	μA	5.0	
D024		—	0.5	6	14	μA	1.8	LPWDT Current
		—	0.8	7	17	μA	3.0	
D024		—	0.8	6	15	μA	2.3	LPWDT Current
		—	0.9	7	20	μA	3.0	
		—	1.0	8	22	μA	5.0	
D025		—	15	28	30	μA	1.8	FVR Current
		—	18	30	33	μA	3.0	
D025		—	18	33	35	μA	2.3	FVR Current
		—	19	35	37	μA	3.0	
		—	20	37	39	μA	5.0	
D026		—	7.5	25	28	μA	3.0	BOR Current
D026		—	10	25	28	μA	3.0	BOR Current
		—	12	28	31	μA	5.0	
D027		—	0.5	4	10	μA	3.0	LPBOR Current
D027		—	0.8	6	14	μA	3.0	LPBOR Current (**Note 1**)
		—	1	8	17	μA	5.0	
D028		—	0.5	5	9	μA	1.8	SOSC Current
		—	0.8	8.5	12	μA	3.0	
D028		—	1.1	6	10	μA	2.3	SOSC Current
		—	1.3	8.5	20	μA	3.0	
		—	1.4	10	25	μA	5.0	

* These parameters are characterized but not tested.

† Data in "Typ" column is at 3.0V, 25°C unless otherwise stated. These parameters are for design guidance only and are not tested.

Note 1: The peripheral current is the sum of the base I_{PD} and the additional current consumed when this peripheral is enabled. The peripheral Δ current can be determined by subtracting the base I_{DD} or I_{PD} current from this limit. Max values should be used when calculating total current consumption.

2: The power-down current in Sleep mode does not depend on the oscillator type. Power-down current is measured with the part in Sleep mode, with all I/O pins in high-impedance state and tied to V_{SS}.

3: ADC oscillator source is FRC.

4: 0.1 μF capacitor on V_{CAP}.

5: VREGPM = 0.

TABLE 30-3: POWER-DOWN CURRENTS (I_{PD})(1,2,4) (CONTINUED)

PIC16LF1784/6/7		Operating Conditions: (unless otherwise stated) Low-Power Sleep Mode						
PIC16F1784/6/7		Low-Power Sleep Mode, VREGPM = 1						
Param No.	Device Characteristics	Min.	Typ†	Max. +85°C	Max. +125°C	Units	Conditions	
							V_{DD}	Note
	Power-down Base Current (I_{PD})(2)							
D029		—	0.05	2	9	μA	1.8	ADC Current **(Note 3)**, no conversion in progress
		—	0.08	3	10	μA	3.0	
D029		—	0.3	4	12	μA	2.3	ADC Current **(Note 3)**, no conversion in progress
		—	0.4	5	13	μA	3.0	
		—	0.5	7	16	μA	5.0	
D030		—	250	—	—	μA	1.8	ADC Current **(Note 3)**, conversion in progress
		—	280	—	—	μA	3.0	
D030		—	230	—	—	μA	2.3	ADC Current **(Note 3, Note 4, Note 5)**, conversion in progress
		—	250	—	—	μA	3.0	
		—	350	—	—	μA	5.0	
D031		—	250	650	—	μA	3.0	Op Amp (High power)
D031			250	650	—	μA	3.0	Op Amp (High power) **(Note 5)**
		—	350	850	—	μA	5.0	
D032		—	250	650	—	μA	1.8	Comparator, Normal-Power mode
		—	300	700	—	μA	3.0	
D032		—	280	650	—	μA	2.3	Comparator, Normal-Power mode **(Note 5)**
		—	300	700	—	μA	3.0	
		—	310	700	—	μA	5.0	

* These parameters are characterized but not tested.

† Data in "Typ" column is at 3.0V, 25°C unless otherwise stated. These parameters are for design guidance only and are not tested.

Note 1: The peripheral current is the sum of the base I_{PD} and the additional current consumed when this peripheral is enabled. The peripheral Δ current can be determined by subtracting the base I_{DD} or I_{PD} current from this limit. Max values should be used when calculating total current consumption.

2: The power-down current in Sleep mode does not depend on the oscillator type. Power-down current is measured with the part in Sleep mode, with all I/O pins in high-impedance state and tied to V_{SS}.

3: ADC oscillator source is FRC.

4: 0.1 μF capacitor on V_{CAP}.

5: VREGPM = 0.

© 2012-2014 Microchip Technology Inc.

TABLE 30-4: I/O PORTS

Standard Operating Conditions (unless otherwise stated)							
Param No.	**Sym.**	**Characteristic**	**Min.**	**Typ†**	**Max.**	**Units**	**Conditions**
	VIL	**Input Low Voltage**					
		I/O PORT:					
D034		with TTL buffer	—	—	0.8	V	4.5V ≤ VDD ≤ 5.5V
D034A			—	—	0.15 VDD	V	1.8V ≤ VDD ≤ 4.5V
D035		with Schmitt Trigger buffer	—	—	0.2 VDD	V	2.0V ≤ VDD ≤ 5.5V
		with I²C™ levels	—	—	0.3 VDD	V	
		with SMBus levels	—	—	0.8	V	2.7V ≤ VDD ≤ 5.5V
D036		$\overline{\text{MCLR}}$, OSC1 (RC mode)(1)	—	—	0.2 VDD	V	
D036A		OSC1 (HS mode)	—	—	0.3 VDD	V	
	VIH	**Input High Voltage**					
		I/O ports:					
D040		with TTL buffer	2.0	—	—	V	4.5V ≤ VDD ≤ 5.5V
D040A			0.25 VDD + 0.8	—	—	V	1.8V ≤ VDD ≤ 4.5V
D041		with Schmitt Trigger buffer	0.8 VDD	—	—	V	2.0V ≤ VDD ≤ 5.5V
		with I²C™ levels	0.7 VDD	—	—	V	
		with SMBus levels	2.1	—	—	V	2.7V ≤ VDD ≤ 5.5V
D042		$\overline{\text{MCLR}}$	0.8 VDD	—	—	V	
D043A		OSC1 (HS mode)	0.7 VDD	—	—	V	
D043B		OSC1 (RC mode)	0.9 VDD	—	—	V	**(Note 1)**
	IIL	**Input Leakage Current(2)**					
D060		I/O ports	—	± 5	± 125	nA	VSS ≤ VPIN ≤ VDD, Pin at high-impedance @ 85°C
				± 5	± 1000	nA	125°C
D061		$\overline{\text{MCLR}}$(3)	—	± 50	± 200	nA	VSS ≤ VPIN ≤ VDD @ 85°C
	IPUR	**Weak Pull-up Current**					
D070*			25 25	100 140	200 300	μA	VDD = 3.3V, VPIN = VSS VDD = 5.0V, VPIN = VSS
	VOL	**Output Low Voltage(4)**					
D080		I/O ports	—	—	0.6	V	IOL = 8mA, VDD = 5V IOL = 6mA, VDD = 3.3V IOL = 1.8mA, VDD = 1.8V
	VOH	**Output High Voltage(4)**					
D090		I/O ports	VDD - 0.7	—	—	V	IOH = 3.5mA, VDD = 5V IOH = 3mA, VDD = 3.3V IOH = 1mA, VDD = 1.8V

* These parameters are characterized but not tested.

† Data in "Typ" column is at 3.0V, 25°C unless otherwise stated. These parameters are for design guidance only and are not tested.

Note 1: In RC oscillator configuration, the OSC1/CLKIN pin is a Schmitt Trigger input. It is not recommended to use an external clock in RC mode.

2: Negative current is defined as current sourced by the pin.

3: The leakage current on the $\overline{\text{MCLR}}$ pin is strongly dependent on the applied voltage level. The specified levels represent normal operating conditions. Higher leakage current may be measured at different input voltages.

4: Including OSC2 in CLKOUT mode.

TABLE 30-4: I/O PORTS (CONTINUED)

Standard Operating Conditions (unless otherwise stated)							
Param No.	**Sym.**	**Characteristic**	**Min.**	**Typ†**	**Max.**	**Units**	**Conditions**
		Capacitive Loading Specs on Output Pins					
D101*	COSC2	OSC2 pin	—	—	15	pF	In XT, HS and LP modes when external clock is used to drive OSC1
D101A*	CIO	All I/O pins	—	—	50	pF	
		VCAP Capacitor Charging					
D102		Charging current	—	200	—	μA	
D102A		Source/sink capability when charging complete	—	0.0	—	mA	

* These parameters are characterized but not tested.

† Data in "Typ" column is at 3.0V, 25°C unless otherwise stated. These parameters are for design guidance only and are not tested.

Note 1: In RC oscillator configuration, the OSC1/CLKIN pin is a Schmitt Trigger input. It is not recommended to use an external clock in RC mode.

2: Negative current is defined as current sourced by the pin.

3: The leakage current on the $\overline{\text{MCLR}}$ pin is strongly dependent on the applied voltage level. The specified levels represent normal operating conditions. Higher leakage current may be measured at different input voltages.

4: Including OSC2 in CLKOUT mode.

© 2012-2014 Microchip Technology Inc.

TABLE 30-5: MEMORY PROGRAMMING REQUIREMENTS

Standard Operating Conditions (unless otherwise stated)							
Param No.	**Sym.**	**Characteristic**	**Min.**	**Typ†**	**Max.**	**Units**	**Conditions**
		Program Memory Programming Specifications					
D110	V_{IHH}	Voltage on $\overline{MCLR}$/V_{PP}/RE3 pin	8.0	—	9.0	V	**(Note 3)**
D111	I_{DDP}	Supply Current during Programming	—	—	10	mA	
D112		V_{DD} for Bulk Erase	2.7	—	V_{DDMAX}	V	
D113	V_{PEW}	V_{DD} for Write or Row Erase	V_{DDMIN}	—	V_{DDMAX}	V	
D114	I_{PPPGM}	Current on $\overline{MCLR}$/V_{PP} during Erase/Write	—	—	1.0	mA	
D115	I_{DDPGM}	Current on V_{DD} during Erase/Write	—		5.0	mA	
		Data EEPROM Memory					
D116	E_D	Byte Endurance	100K	—	—	E/W	-40°C to +85°C
D117	V_{DRW}	V_{DD} for Read/Write	V_{DDMIN}	—	V_{DDMAX}	V	
D118	T_{DEW}	Erase/Write Cycle Time	—	4.0	5.0	ms	
D119	T_{RETD}	Characteristic Retention	—	40	—	Year	Provided no other specifications are violated
D120	T_{REF}	Number of Total Erase/Write Cycles before Refresh(2)	100k	—	—	E/W	-40°C to +85°C
		Program Flash Memory					
D121	E_P	Cell Endurance	10K	—	—	E/W	-40°C to +85°C (**Note 1**)
D122	V_{PR}	V_{DD} for Read	V_{DDMIN}	—	V_{DDMAX}	V	
D123	T_{IW}	Self-timed Write Cycle Time	—	2	2.5	ms	
D124	T_{RETD}	Characteristic Retention	—	40	—	Year	Provided no other specifications are violated

† Data in "Typ" column is at 3.0V, 25°C unless otherwise stated. These parameters are for design guidance only and are not tested.

Note 1: Self-write and Block Erase.

2: Refer to **Section 12.2 "Using the Data EEPROM"** for a more detailed discussion on data EEPROM endurance.

3: Required only if single-supply programming is disabled.

30.4 Thermal Considerations

Standard Operating Conditions (unless otherwise stated)					
Param No.	**Sym.**	**Characteristic**	**Typ.**	**Units**	**Conditions**
TH01	θ_{JA}	Thermal Resistance Junction to Ambient	60	°C/W	28-pin SPDIP package
			80	°C/W	28-pin SOIC package
			90	°C/W	28-pin SSOP package
			27.5	°C/W	28-pin QFN 6x6mm package
			47.2	°C/W	40-pin DIP package
			41	°C/W	40-pin UQFN 5x5
			46	°C/W	44-pin TQFP package
			24.4	°C/W	44-pin QFN 8x8mm package
TH02	θ_{JC}	Thermal Resistance Junction to Case	31.4	°C/W	28-pin SPDIP package
			24	°C/W	28-pin SOIC package
			24	°C/W	28-pin SSOP package
			24	°C/W	28-pin QFN 6x6mm package
			24.7	°C/W	40-pin DIP package
			5.5	°C/W	40-pin UQFN 5x5
			14.5	°C/W	44-pin TQFP package
			20	°C/W	44-pin QFN 8x8mm package
TH03	T_{JMAX}	Maximum Junction Temperature	150	°C	
TH04	PD	Power Dissipation	—	W	$PD = P_{INTERNAL} + P_{I/O}$
TH05	$P_{INTERNAL}$	Internal Power Dissipation	—	W	$P_{INTERNAL} = I_{DD} \times V_{DD}$ (1)
TH06	$P_{I/O}$	I/O Power Dissipation	—	W	$P_{I/O} = \Sigma (I_{OL} * V_{OL}) + \Sigma (I_{OH} * (V_{DD} - V_{OH}))$
TH07	P_{DER}	Derated Power	—	W	$P_{DER} = PD_{MAX} (T_J - T_A)/\theta_{JA}$ (2)

Note 1: I_{DD} is current to run the chip alone without driving any load on the output pins.
2: T_A = Ambient Temperature
3: T_J = Junction Temperature

© 2012-2014 Microchip Technology Inc.

30.5 AC Characteristics

Timing Parameter Symbology has been created with one of the following formats:

1. TppS2ppS
2. TppS

T			
F	Frequency	T	Time

Lowercase letters (pp) and their meanings:

pp			
cc	CCP1	osc	OSC1
ck	CLKOUT	rd	$\overline{RD}$
cs	$\overline{CS}$	rw	$\overline{RD}$ or $\overline{WR}$
di	SDI	sc	SCK
do	SDO	ss	$\overline{SS}$
dt	Data in	t0	T0CKI
io	I/O PORT	t1	T1CKI
mc	$\overline{MCLR}$	wr	$\overline{WR}$

Uppercase letters and their meanings:

S			
F	Fall	P	Period
H	High	R	Rise
I	Invalid (High-impedance)	V	Valid
L	Low	Z	High-impedance

FIGURE 30-4: LOAD CONDITIONS

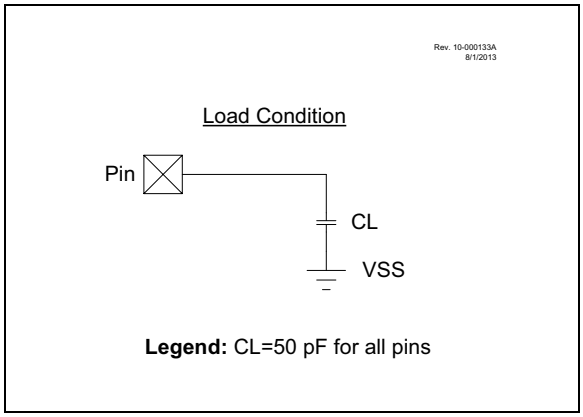

FIGURE 30-5: CLOCK TIMING

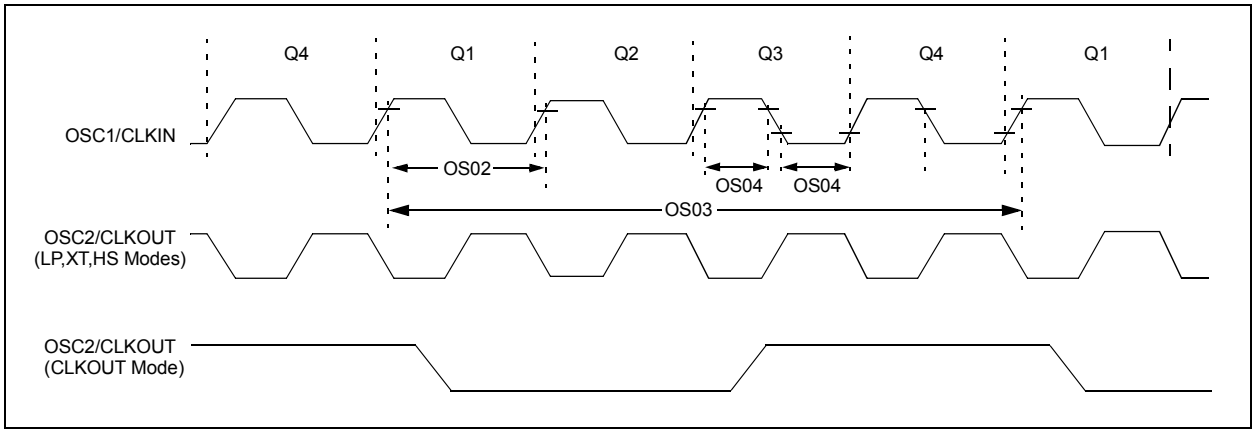

TABLE 30-6: CLOCK OSCILLATOR TIMING REQUIREMENTS

Standard Operating Conditions (unless otherwise stated)

Param No.	Sym.	Characteristic	Min.	Typ†	Max.	Units	Conditions
OS01	FOSC	External CLKIN Frequency(1)	DC	—	0.5	MHz	EC Oscillator mode (low)
			DC	—	4	MHz	EC Oscillator mode (medium)
			DC	—	20	MHz	EC Oscillator mode (high)
		Oscillator Frequency(1)	—	32.768	—	kHz	LP Oscillator mode
			0.1	—	4	MHz	XT Oscillator mode
			1	—	4	MHz	HS Oscillator mode
			1	—	20	MHz	HS Oscillator mode, VDD > 2.7V
			DC	—	4	MHz	RC Oscillator mode, VDD > 2.0V
OS02	TOSC	External CLKIN Period(1)	27	—	∞	μs	LP Oscillator mode
			250	—	∞	ns	XT Oscillator mode
			50	—	∞	ns	HS Oscillator mode
			50	—	∞	ns	EC Oscillator mode
		Oscillator Period(1)	—	30.5	—	μs	LP Oscillator mode
			250	—	10,000	ns	XT Oscillator mode
			50	—	1,000	ns	HS Oscillator mode
			250	—	—	ns	RC Oscillator mode
OS03	TCY	Instruction Cycle Time(1)	200	TCY	DC	ns	TCY = 4/FOSC
OS04*	TosH, TosL	External CLKIN High, External CLKIN Low	2	—	—	μs	LP oscillator
			100	—	—	ns	XT oscillator
			20	—	—	ns	HS oscillator
OS05*	TosR, TosF	External CLKIN Rise, External CLKIN Fall	0	—	∞	ns	LP oscillator
			0	—	∞	ns	XT oscillator
			0	—	∞	ns	HS oscillator

* These parameters are characterized but not tested.

† Data in “Typ” column is at 3.0V, 25°C unless otherwise stated. These parameters are for design guidance only and are not tested.

Note 1: Instruction cycle period (TCY) equals four times the input oscillator time base period. All specified values are based on characterization data for that particular oscillator type under standard operating conditions with the device executing code. Exceeding these specified limits may result in an unstable oscillator operation and/or higher than expected current consumption. All devices are tested to operate at “min” values with an external clock applied to OSC1 pin. When an external clock input is used, the “max” cycle time limit is “DC” (no clock) for all devices.

© 2012-2014 Microchip Technology Inc.

TABLE 30-7: OSCILLATOR PARAMETERS

Standard Operating Conditions (unless otherwise stated)								
Param No.	**Sym.**	**Characteristic**	**Freq. Tolerance**	**Min.**	**Typ†**	**Max.**	**Units**	**Conditions**
OS08	HFOSC	Internal Calibrated HFINTOSC Frequency(2)	±2%	—	16.0	—	MHz	0°C ≤ TA ≤ +60°C, VDD ≥ 2.5V
			±3%	—	16.0	—	MHz	60°C ≤ TA ≤ 85°C, VDD ≥ 2.5V
			±5%	—	16.0	—	MHz	-40°C ≤ TA ≤ +125°C
OS08A	MFOSC	Internal Calibrated MFINTOSC Frequency(2)	±2%	—	500	—	kHz	0°C ≤ TA ≤ +60°C, VDD ≥ 2.5V
			±3%	—	500	—	kHz	60°C ≤ TA ≤ 85°C, VDD ≥ 2.5V
			±5%	—	500	—	kHz	-40°C ≤ TA ≤ +125°C
OS09	LFOSC	Internal LFINTOSC Frequency	—	—	31	—	kHz	-40°C ≤ TA ≤ +125°C
OS10*	TIOSC ST	HFINTOSC Wake-up from Sleep Start-up Time	—	—	3.2	8	μs	VREGPM = 0
		MFINTOSC Wake-up from Sleep Start-up Time	—	—	24	35	μs	VREGPM = 0

* These parameters are characterized but not tested.

† Data in "Typ" column is at 3.0V, 25°C unless otherwise stated. These parameters are for design guidance only and are not tested.

Note 1: Instruction cycle period (TCY) equals four times the input oscillator time base period. All specified values are based on characterization data for that particular oscillator type under standard operating conditions with the device executing code. Exceeding these specified limits may result in an unstable oscillator operation and/or higher than expected current consumption. All devices are tested to operate at "min" values with an external clock applied to the OSC1 pin. When an external clock input is used, the "max" cycle time limit is "DC" (no clock) for all devices.

2: To ensure these oscillator frequency tolerances, VDD and VSS must be capacitively decoupled as close to the device as possible. 0.1 μF and 0.01 μF values in parallel are recommended.

3: By design.

FIGURE 30-6: HFINTOSC FREQUENCY ACCURACY OVER DEVICE VDD AND TEMPERATURE

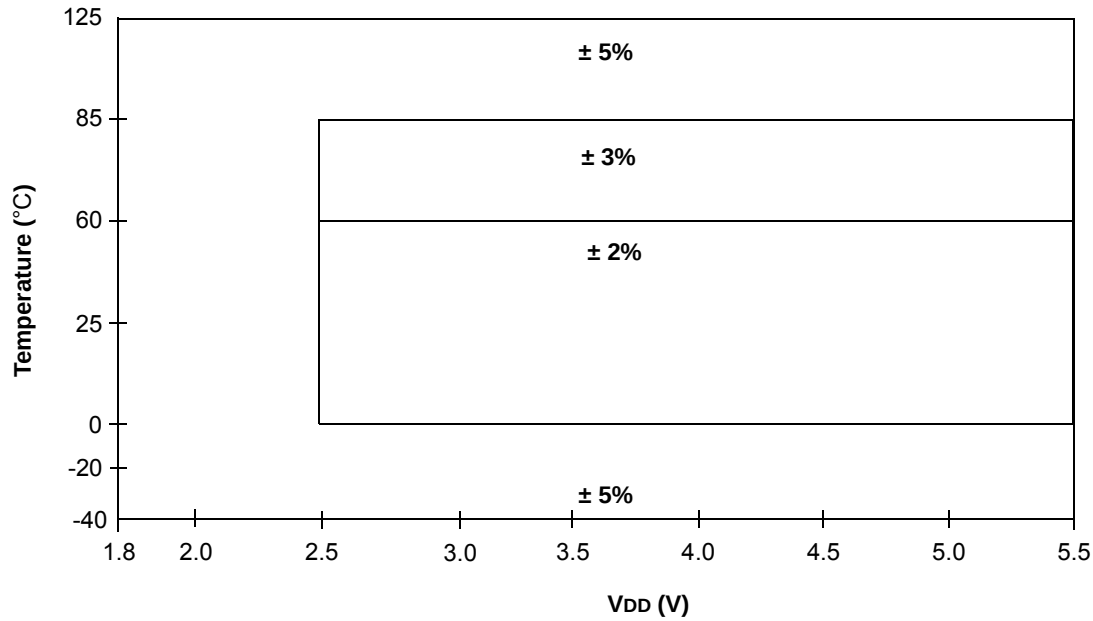

TABLE 30-8: PLL CLOCK TIMING SPECIFICATIONS

Standard Operating Conditions (unless otherwise stated)							
Param No.	**Sym.**	**Characteristic**	**Min.**	**Typ†**	**Max.**	**Units**	**Conditions**
F10	FOSC	Oscillator Frequency Range	4	—	8	MHz	
F11	FSYS	On-Chip VCO System Frequency	16	—	32	MHz	
F12	TRC	PLL Start-up Time (Lock Time)	—	—	2	ms	
F13*	ΔCLK	CLKOUT Stability (Jitter)	-0.25%	—	+0.25%	%	

* These parameters are characterized but not tested.

† Data in “Typ” column is at 5V, 25°C unless otherwise stated. These parameters are for design guidance only and are not tested.

FIGURE 30-7: CLKOUT AND I/O TIMING

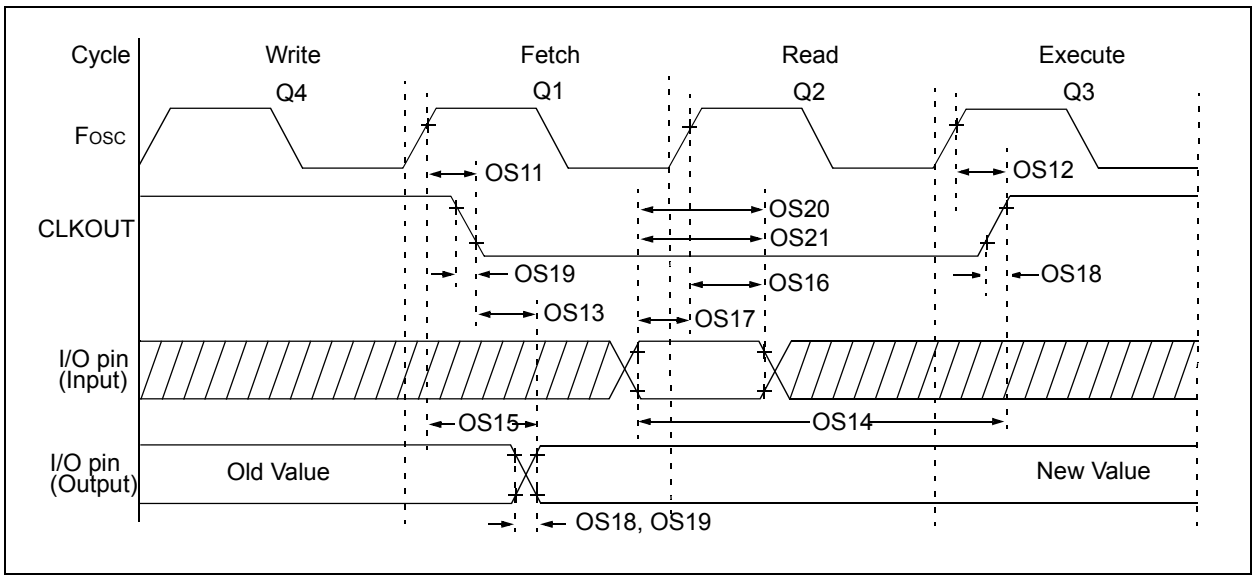

© 2012-2014 Microchip Technology Inc.

TABLE 30-9: CLKOUT AND I/O TIMING PARAMETERS

Standard Operating Conditions (unless otherwise stated)							
Param No.	**Sym.**	**Characteristic**	**Min.**	**Typ†**	**Max.**	**Units**	**Conditions**
OS11	TosH2ckL	FOSC↑ to CLKOUT↓ (1)	—	—	70	ns	VDD = 3.3-5.0V
OS12	TosH2ckH	FOSC↑ to CLKOUT↑ (1)	—	—	72	ns	VDD = 3.3-5.0V
OS13	TckL2ioV	CLKOUT↓ to Port out valid(1)	—	—	20	ns	
OS14	TioV2ckH	Port input valid before CLKOUT↑(1)	TOSC + 200 ns	—	—	ns	
OS15	TosH2ioV	Fosc↑ (Q1 cycle) to Port out valid	—	50	70*	ns	VDD = 3.3-5.0V
OS16	TosH2ioI	Fosc↑ (Q2 cycle) to Port input invalid (I/O in hold time)	50	—	—	ns	VDD = 3.3-5.0V
OS17	TioV2osH	Port input valid to Fosc↑ (Q2 cycle) (I/O in setup time)	20	—	—	ns	
OS18*	TioR	Port output rise time	— —	40 15	72 32	ns	VDD = 1.8V VDD = 3.3-5.0V
OS19*	TioF	Port output fall time	— —	28 15	55 30	ns	VDD = 1.8V VDD = 3.3-5.0V
OS20*	Tinp	INT pin input high or low time	25	—	—	ns	
OS21*	Tioc	Interrupt-on-change new input level time	25	—	—	ns	

* These parameters are characterized but not tested.

† Data in “Typ” column is at 3.0V, 25°C unless otherwise stated.

Note 1: Measurements are taken in RC mode where CLKOUT output is 4 x TOSC.

FIGURE 30-8: RESET, WATCHDOG TIMER, OSCILLATOR START-UP TIMER AND POWER-UP TIMER TIMING

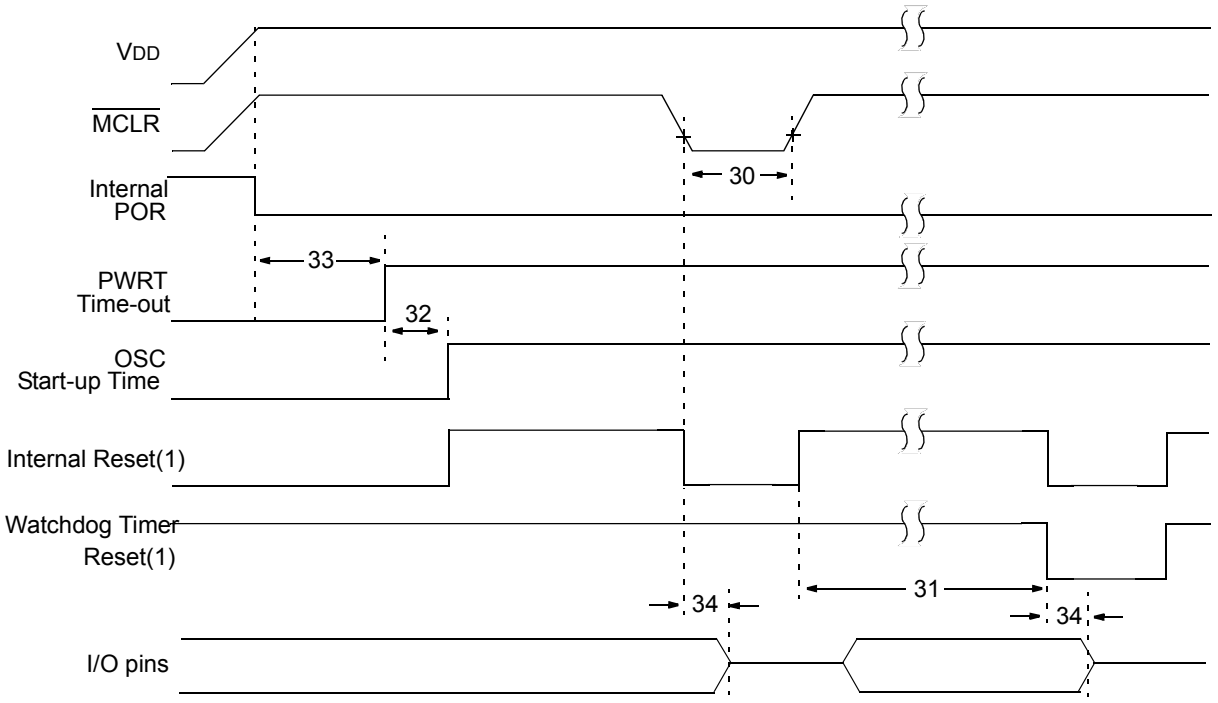

Note 1: Asserted low.

FIGURE 30-9: BROWN-OUT RESET TIMING AND CHARACTERISTICS

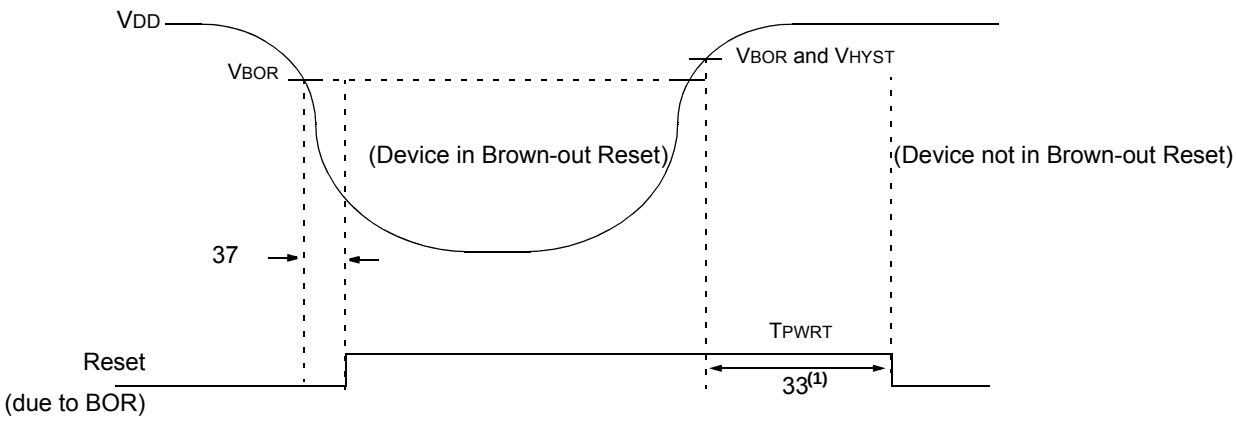

Note 1: The delay, (T_{PWRT}) releasing Reset, only occurs when the Power-up Timer is enabled, ($\overline{PWRTE}$ = 0).

© 2012-2014 Microchip Technology Inc.

TABLE 30-10: RESET, WATCHDOG TIMER, OSCILLATOR START-UP TIMER, POWER-UP TIMER AND BROWN-OUT RESET PARAMETERS

Standard Operating Conditions (unless otherwise stated)							
Param No.	**Sym.**	**Characteristic**	**Min.**	**Typ†**	**Max.**	**Units**	**Conditions**
30	TMCL	$\overline{\text{MCLR}}$ Pulse Width (low)	2 5	— —	— —	μs μs	VDD = 3.3-5V, -40°C to +85°C VDD = 3.3-5V
31	TWDTLP	Low-Power Watchdog Timer Time-out Period	10	16	27	ms	VDD = 3.3V-5V 1:16 Prescaler used
32	TOST	Oscillator Start-up Timer Period(1), (2)	—	1024	—	Tosc	**(Note 3)**
33*	TPWRT	Power-up Timer Period, $\overline{\text{PWRTE}}$ = 0	40	65	140	ms	
34*	TIOZ	I/O high-impedance from $\overline{\text{MCLR}}$ Low or Watchdog Timer Reset	—	—	2.0	μs	
35	VBOR	Brown-out Reset Voltage	2.55 2.30 1.80	2.70 2.45 1.90	2.85 2.6 2.10	V V V	BORV = 0 BORV=1 (F device) BORV=1 (LF device)
35A	VLPBOR	Low-Power Brown-out	1.8	2.1	2.5	V	LPBOR = 1
36*	VHYST	Brown-out Reset Hysteresis	0	25	75	mV	-40°C to +85°C
37*	TBORDC	Brown-out Reset DC Response Time	1	3	35	μs	VDD ≤ VBOR

* These parameters are characterized but not tested.

† Data in "Typ" column is at 3.0V, 25°C unless otherwise stated. These parameters are for design guidance only and are not tested.

Note 1: Instruction cycle period (TCY) equals four times the input oscillator time base period. All specified values are based on characterization data for that particular oscillator type under standard operating conditions with the device executing code. Exceeding these specified limits may result in an unstable oscillator operation and/or higher than expected current consumption. All devices are tested to operate at "min" values with an external clock applied to the OSC1 pin. When an external clock input is used, the "max" cycle time limit is "DC" (no clock) for all devices.

2: By design.

3: Period of the slower clock.

4: To ensure these voltage tolerances, VDD and VSS must be capacitively decoupled as close to the device as possible. 0.1 μF and 0.01 μF values in parallel are recommended.

FIGURE 30-10: TIMER0 AND TIMER1 EXTERNAL CLOCK TIMINGS

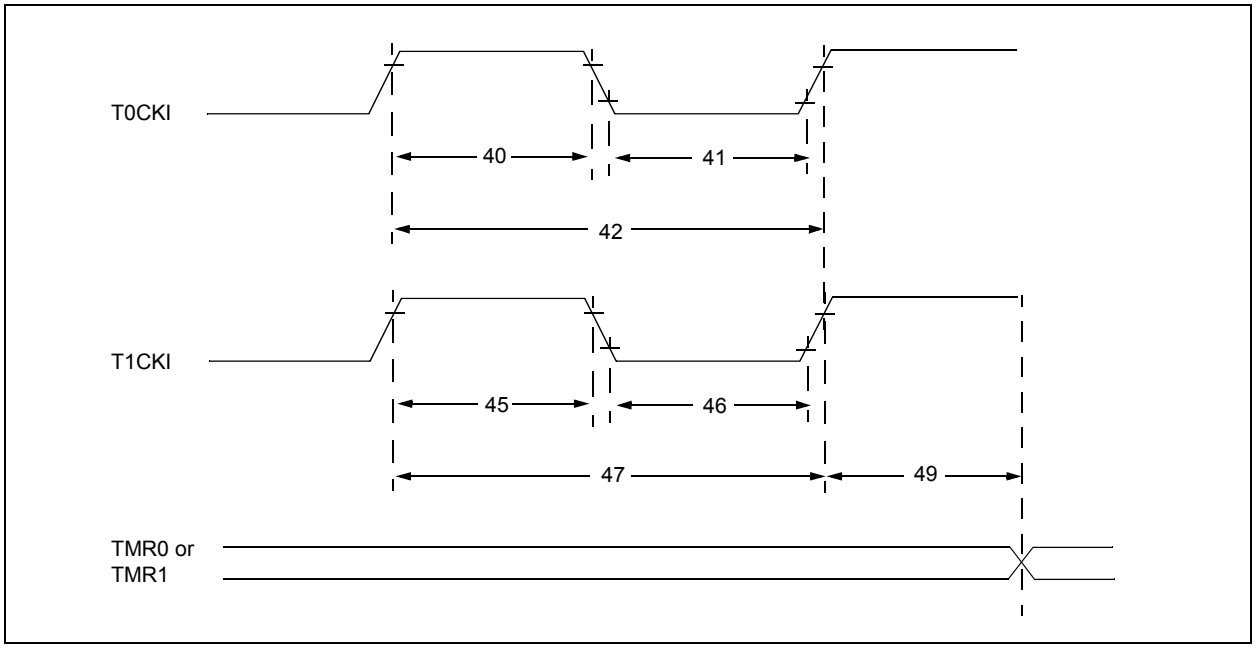

TABLE 30-11: TIMER0 AND TIMER1 EXTERNAL CLOCK REQUIREMENTS

Standard Operating Conditions (unless otherwise stated)								
Param No.	**Sym.**	**Characteristic**		**Min.**	**Typ†**	**Max.**	**Units**	**Conditions**
40*	TT0H	T0CKI High Pulse Width	No Prescaler	0.5 TCY + 20	—	—	ns	
			With Prescaler	10	—	—	ns	
41*	TT0L	T0CKI Low Pulse Width	No Prescaler	0.5 TCY + 20	—	—	ns	
			With Prescaler	10	—	—	ns	
42*	TT0P	T0CKI Period		Greater of: 20 or TCY + 40 / N	—	—	ns	N = prescale value (2, 4, ..., 256)
45*	TT1H	T1CKI High Time	Synchronous, No Prescaler	0.5 TCY + 20	—	—	ns	
			Synchronous, with Prescaler	15	—	—	ns	
			Asynchronous	30	—	—	ns	
46*	TT1L	T1CKI Low Time	Synchronous, No Prescaler	0.5 TCY + 20	—	—	ns	
			Synchronous, with Prescaler	15	—	—	ns	
			Asynchronous	30	—	—	ns	
47*	TT1P	T1CKI Input Period	Synchronous	Greater of: 30 or TCY + 40 / N	—	—	ns	N = prescale value (1, 2, 4, 8)
			Asynchronous	60	—	—	ns	
48	FT1	Timer1 Oscillator Input Frequency Range (oscillator enabled by setting bit T1OSCEN)		32.4	32.768	33.1	kHz	
49*	TCKEZTMR1	Delay from External Clock Edge to Timer Increment		2 TOSC	—	7 TOSC	—	Timers in Sync mode

* These parameters are characterized but not tested.

† Data in “Typ” column is at 3.0V, 25°C unless otherwise stated. These parameters are for design guidance only and are not tested.

© 2012-2014 Microchip Technology Inc.

FIGURE 30-11: CAPTURE/COMPARE/PWM TIMINGS (CCP)

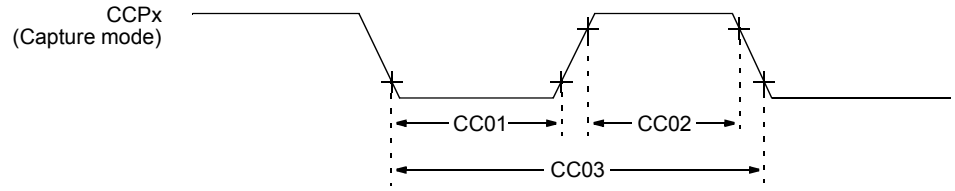

Note: Refer to Figure 30-5 for load conditions.

TABLE 30-12: CAPTURE/COMPARE/PWM REQUIREMENTS (CCP)

Standard Operating Conditions (unless otherwise stated)								
Param No.	**Sym.**	**Characteristic**		**Min.**	**Typ†**	**Max.**	**Units**	**Conditions**
CC01*	TccL	CCPx Input Low Time	No Prescaler	0.5TCY + 20	—	—	ns	
			With Prescaler	20	—	—	ns	
CC02*	TccH	CCPx Input High Time	No Prescaler	0.5TCY + 20	—	—	ns	
			With Prescaler	20	—	—	ns	
CC03*	TccP	CCPx Input Period		$\frac{3T_{CY} + 40}{N}$	—	—	ns	N = prescale value (1, 4 or 16)

* These parameters are characterized but not tested.

† Data in “Typ” column is at 3.0V, 25°C unless otherwise stated. These parameters are for design guidance only and are not tested.

TABLE 30-13: ADC CONVERTER (ADC) 12-BIT DIFFERENTIAL CHARACTERISTICS:

Operating Conditions VDD = 3V, Temp. = 25°C, Single-ended 2 μs TAD, VREF+ = 3V, VREF- = VSS							
Param No.	**Sym.**	**Characteristic**	**Min.**	**Typ†**	**Max.**	**Units**	**Conditions**
AD01	NR	Resolution	—	—	10	bit	
AD02	EIL	Integral Error	—	±1	±1.6	LSb	
AD03	EDL	Differential Error	—	±1	±1.4	LSb	No missing codes
AD04	EOFF	Offset Error	—	±1	±3.5	LSb	
AD05	EGN	Gain Error	—	±1	±2	LSb	
AD06	VREF	Reference Voltage(3)	1.8	—	VDD	V	VREF = (VREF+ minus VREF-)
AD07	VAIN	Full-Scale Range	—	—	VREF	V	
AD08	ZAIN	Recommended Impedance of Analog Voltage Source	—	—	10	kΩ	Can go higher if external 0.01μF capacitor is present on input pin.
AD09	NR	Resolution	—	—	12	bit	
AD10	EIL	Integral Error	—	±2	—	LSb	
AD11	EDL	Differential Error	—	±2	—	LSb	
AD12	EOFF	Offset Error	—	±1	—	LSb	
AD13	EGN	Gain Error	—	±1	—	LSb	
AD14	VREF	Reference Voltage(3)	1.8	—	VDD	V	VREF = (VREF+ minus VREF-)
AD15	VAIN	Full-Scale Range	—	—	VREF	V	
AD16	ZAIN	Recommended Impedance of Analog Voltage Source	—	—	10	kΩ	Can go higher if external 0.01μF capacitor is present on input pin.

* These parameters are characterized but not tested.

† Data in "Typ" column is at 3.0V, 25°C unless otherwise stated. These parameters are for design guidance only and are not tested.

Note 1: Total Absolute Error includes integral, differential, offset and gain errors.

2: The ADC conversion result never decreases with an increase in the input voltage and has no missing codes.

3: ADC VREF is from external VREF, VDD pin or FVR, whichever is selected as reference input.

4: When ADC is off, it will not consume any current other than leakage current. The power-down current specification includes any such leakage from the ADC module.

TABLE 30-14: ADC CONVERSION REQUIREMENTS

Standard Operating Conditions (unless otherwise stated)							
Param No.	**Sym.**	**Characteristic**	**Min.**	**Typ†**	**Max.**	**Units**	**Conditions**
AD130*	TAD	ADC Clock Period	1.0	—	9.0	μs	TOSC-based
		ADC Internal RC Oscillator Period	1.0	2.5	6.0	μs	ADCS<1:0> = 11 (ADRC mode)
AD131	TCNV	Conversion Time (not including Acquisition Time)(1)	—	15 (12-bit) 13 (10-bit)	—	TAD	Set GO/$\overline{\text{DONE}}$ bit to conversion complete
AD132*	TACQ	Acquisition Time	—	5.0	—	μs	

* These parameters are characterized but not tested.

† Data in "Typ" column is at 3.0V, 25°C unless otherwise stated. These parameters are for design guidance only and are not tested.

Note 1: The ADRES register may be read on the following TCY cycle.

© 2012-2014 Microchip Technology Inc.

FIGURE 30-12: ADC CONVERSION TIMING (NORMAL MODE)

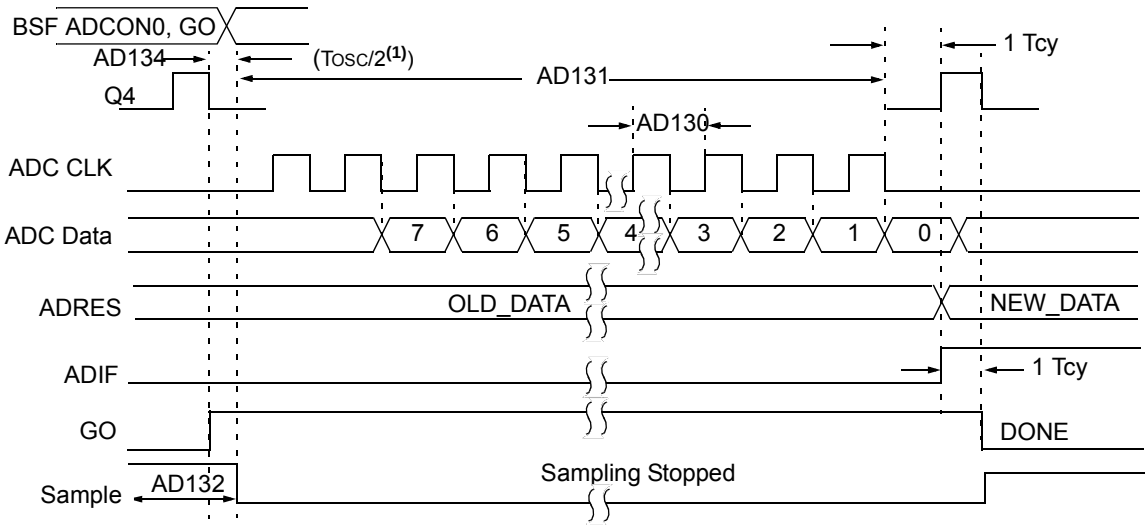

Note 1: If the ADC clock source is selected as RC, a time of TCY is added before the ADC clock starts. This allows the SLEEP instruction to be executed.

FIGURE 30-13: ADC CONVERSION TIMING (SLEEP MODE)

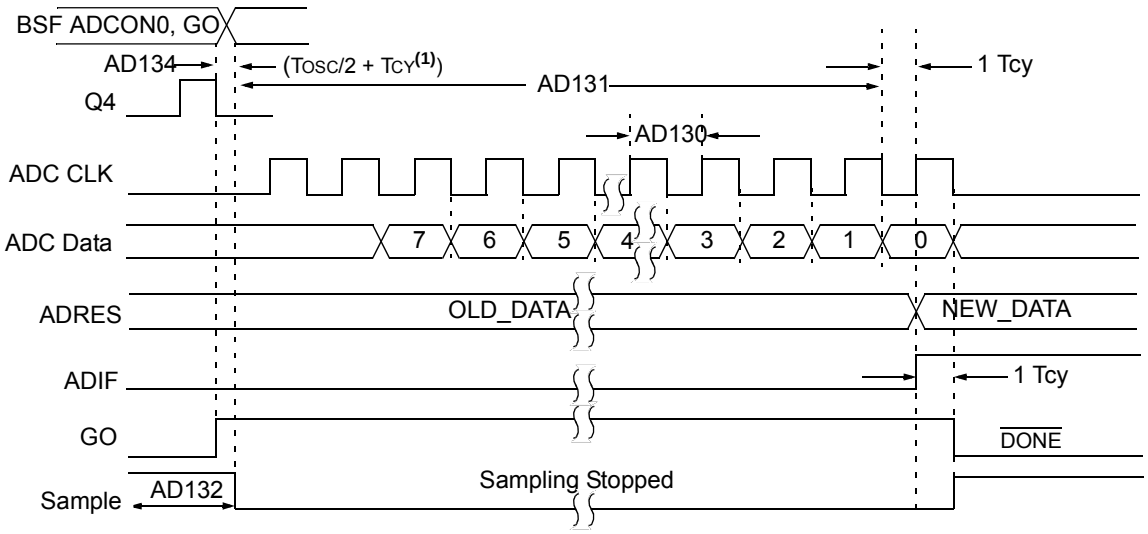

Note 1: If the ADC clock source is selected as RC, a time of TCY is added before the ADC clock starts. This allows the SLEEP instruction to be executed.

TABLE 30-15: OPERATIONAL AMPLIFIER (OPA)

DC CHARACTERISTICS			Standard Operating Conditions (unless otherwise stated): VDD = 3.0 Temperature 25°C, High-Power Mode				
Param No.	**Symbol**	**Parameters**	**Min.**	**Typ.**	**Max.**	**Units**	**Conditions**
OPA01*	GBWP	Gain Bandwidth Product	—	3.5	—	MHz	High-Power mode
OPA02*	TON	Turn on Time	—	10	—	μs	
OPA03*	PM	Phase Margin	—	60	—	degrees	
OPA04*	SR	Slew Rate	—	3	—	V/μs	
OPA05	OFF	Offset	—	±3	±9	mV	
OPA06	CMRR	Common Mode Rejection Ratio	55	70	—	dB	
OPA07*	AOL	Open Loop Gain	—	90	—	dB	
OPA08	VICM	Input Common Mode Voltage	0	—	VDD	V	VDD > 2.5
OPA09*	PSRR	Power Supply Rejection Ratio	—	80	—	dB	

* These parameters are characterized but not tested.

TABLE 30-16: COMPARATOR SPECIFICATIONS

Operating Conditions: VDD = 3.0V, Temperature = 25°C (unless otherwise stated).							
Param No.	**Sym.**	**Characteristics**	**Min.**	**Typ.**	**Max.**	**Units**	**Comments**
CM01	VIOFF	Input Offset Voltage	—	±2.5	±9	mV	Normal-Power mode VICM = VDD/2
CM02	VICM	Input Common Mode Voltage	0	—	VDD	V	
CM03	CMRR	Common Mode Rejection Ratio	40	50	—	dB	
CM04A	TRESP	Response Time Rising Edge	—	60	125	ns	Normal-Power mode measured at VDD/2 **(Note 1)**
CM04B		Response Time Falling Edge	—	60	110	ns	Normal-Power mode measured at VDD/2 **(Note 1)**
CM04C		Response Time Rising Edge	—	85	—	ns	Low-Power mode measured at VDD/2 **(Note 1)**
CM04D		Response Time Falling Edge	—	85	—	ns	Low-Power mode measured at VDD/2 **(Note 1)**
CM05	Tmc2ov	Comparator Mode Change to Output Valid*	—	—	10	μs	
CM06	CHYSTER	Comparator Hysteresis	20	45	75	mV	Hystersis ON, High Power measured at VDD/2 **(Note 2)**

* These parameters are characterized but not tested.

Note 1: Response time measured with one comparator input at VDD/2, while the other input transitions from VSS to VDD.

2: Comparator Hysteresis is available when the CxHYS bit of the CMxCON0 register is enabled.

© 2012-2014 Microchip Technology Inc.

TABLE 30-17: DIGITAL-TO-ANALOG CONVERTER (DAC) SPECIFICATIONS

Operating Conditions: VDD = 3V, Temperature = 25°C (unless otherwise stated).							
Param No.	**Sym.**	**Characteristics**	**Min.**	**Typ.**	**Max.**	**Units**	**Comments**
DAC01*	CLSB	Step Size	—	VDD/256	—	V	
DAC02*	CACC	Absolute Accuracy	—	—	± 1.5	LSb	
DAC03*	CR	Unit Resistor Value (R)	—	600	—	Ω	
DAC04*	CST	Settling Time(1)	—	—	10	μs	

* These parameters are characterized but not tested.

Note 1: Settling time measured while DACR<7:0> transitions from '0x00' to '0xFF'.

FIGURE 30-14: EUSART SYNCHRONOUS TRANSMISSION (MASTER/SLAVE) TIMING

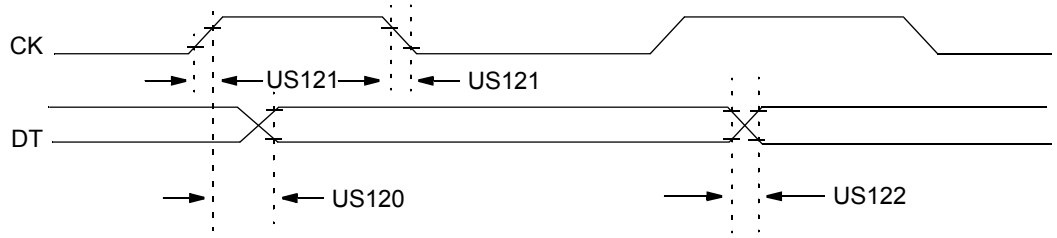

Note: Refer to Figure 30-4 for load conditions.

TABLE 30-18: EUSART SYNCHRONOUS TRANSMISSION REQUIREMENTS

Standard Operating Conditions (unless otherwise stated)							
Param. No.	**Symbol**	**Characteristic**		**Min.**	**Max.**	**Units**	**Conditions**
US120	TCKH2DTV	SYNC XMIT (Master and Slave) Clock high to data-out valid	3.0-5.5V	—	80	ns	
			1.8-5.5V	—	100	ns	
US121	TCKRF	Clock out rise time and fall time (Master mode)	3.0-5.5V	—	45	ns	
			1.8-5.5V	—	50	ns	
US122	TDTRF	Data-out rise time and fall time	3.0-5.5V	—	45	ns	
			1.8-5.5V	—	50	ns	

FIGURE 30-15: EUSART SYNCHRONOUS RECEIVE (MASTER/SLAVE) TIMING

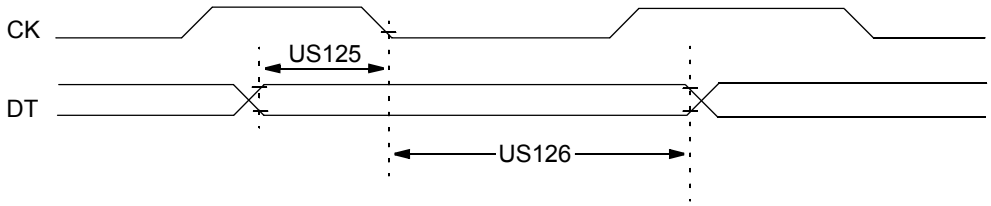

Note: Refer to Figure 30-4 for load conditions.

TABLE 30-19: EUSART SYNCHRONOUS RECEIVE REQUIREMENTS

Standard Operating Conditions (unless otherwise stated)						
Param. No.	**Symbol**	**Characteristic**	**Min.**	**Max.**	**Units**	**Conditions**
US125	TDTV2CKL	SYNC RCV (Master and Slave) Data-hold before CK ↓ (DT hold time)	10	—	ns	
US126	TCKL2DTL	Data-hold after CK ↓ (DT hold time)	15	—	ns	

© 2012-2014 Microchip Technology Inc.

FIGURE 30-16: SPI MASTER MODE TIMING (CKE = 0, SMP = 0)

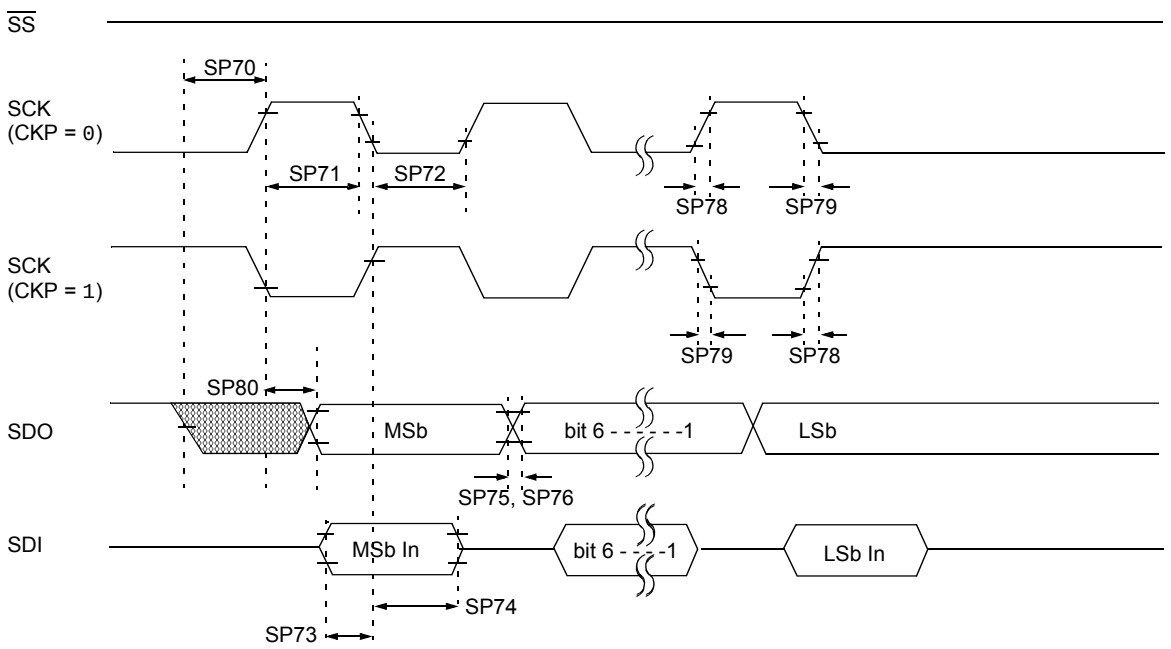

Note: Refer to Figure 30-4 for load conditions.

FIGURE 30-17: SPI MASTER MODE TIMING (CKE = 1, SMP = 1)

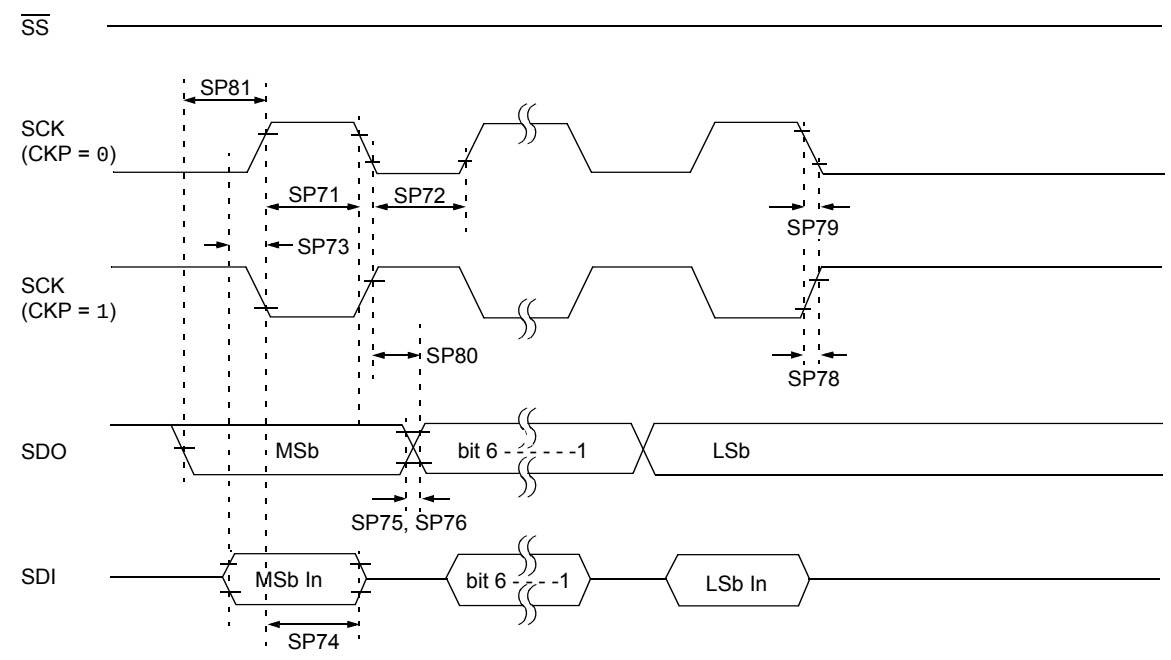

Note: Refer to Figure 30-4 for load conditions.

FIGURE 30-18: SPI SLAVE MODE TIMING (CKE = 0)

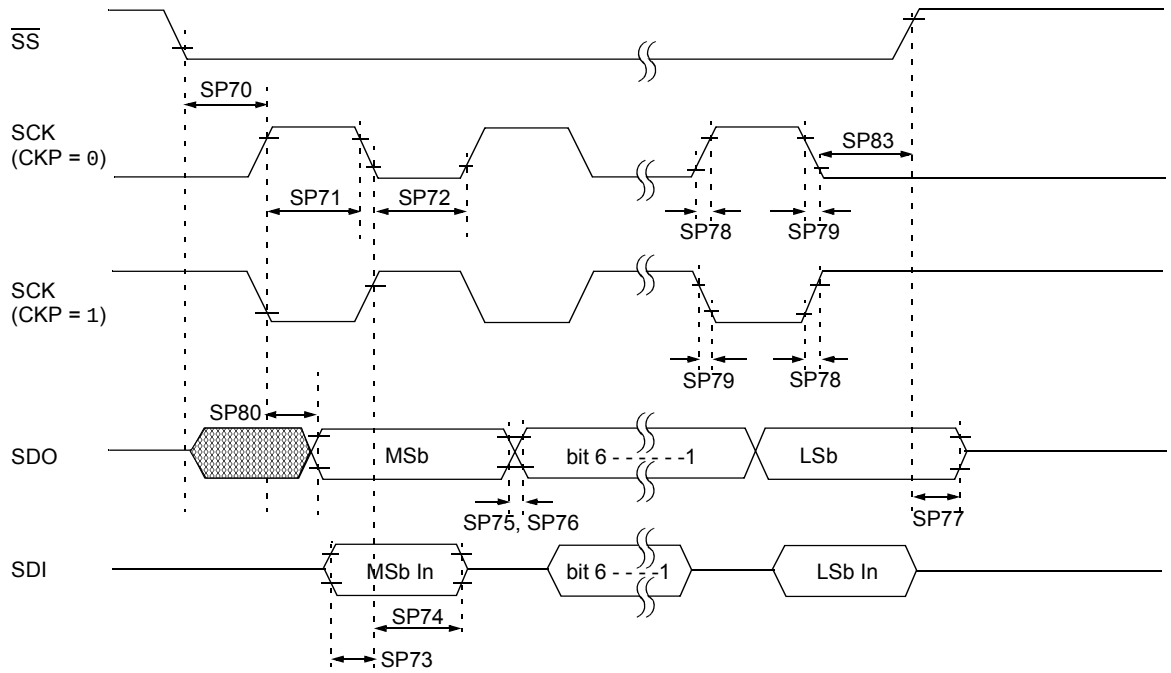

Note: Refer to Figure 30-4 for load conditions.

FIGURE 30-19: SPI SLAVE MODE TIMING (CKE = 1)

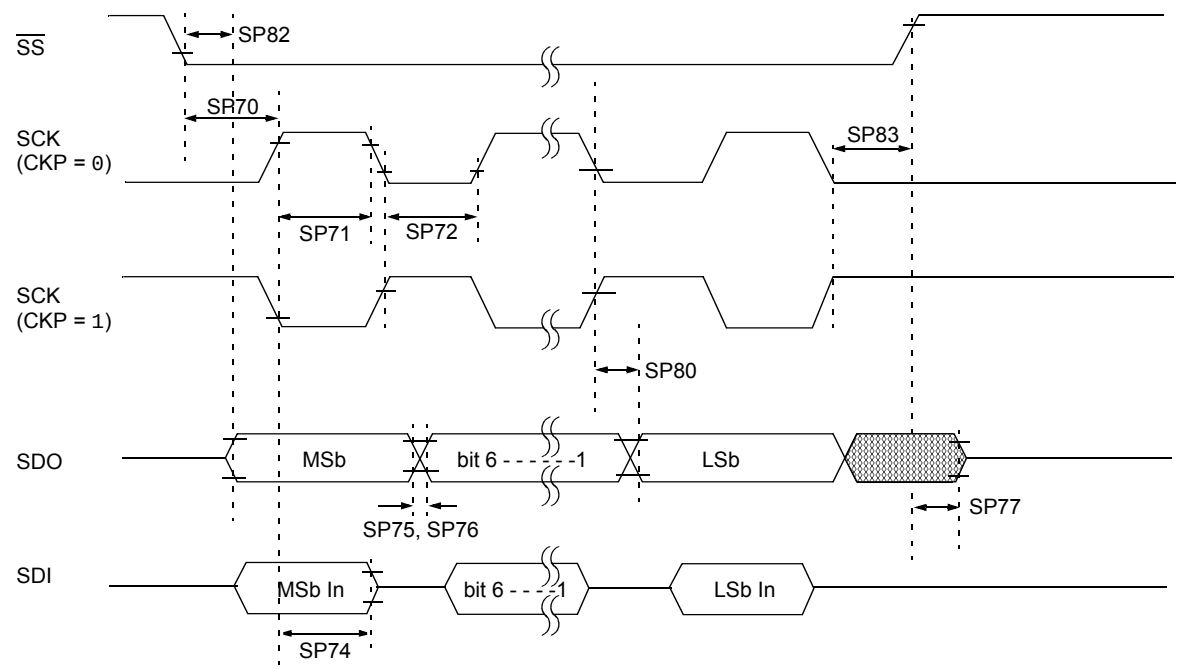

Note: Refer to Figure 30-4 for load conditions.

© 2012-2014 Microchip Technology Inc.

TABLE 30-20: SPI MODE REQUIREMENTS

Standard Operating Conditions (unless otherwise stated)								
Param No.	**Symbol**	**Characteristic**		**Min.**	**Typ†**	**Max.**	**Units**	**Conditions**
SP70*	TssL2scH, TssL2scL	$\overline{SS}$↓ to SCK↓ or SCK↑ input		2.25*TCY	—	—	ns	
SP71*	TscH	SCK input high time (Slave mode)		TCY + 20	—	—	ns	
SP72*	TscL	SCK input low time (Slave mode)		TCY + 20	—	—	ns	
SP73*	TdiV2scH, TdiV2scL	Setup time of SDI data input to SCK edge		100	—	—	ns	
SP74*	TscH2diL, TscL2diL	Hold time of SDI data input to SCK edge		100	—	—	ns	
SP75*	TdoR	SDO data output rise time	3.0-5.5V	—	10	25	ns	
			1.8-5.5V	—	25	50	ns	
SP76*	TdoF	SDO data output fall time		—	10	25	ns	
SP77*	TssH2doZ	$\overline{SS}$↑ to SDO output high-impedance		10	—	50	ns	
SP78*	TscR	SCK output rise time (Master mode)	3.0-5.5V	—	10	25	ns	
			1.8-5.5V	—	25	50	ns	
SP79*	TscF	SCK output fall time (Master mode)		—	10	25	ns	
SP80*	TscH2doV, TscL2doV	SDO data output valid after SCK edge	3.0-5.5V	—	—	50	ns	
			1.8-5.5V	—	—	145	ns	
SP81*	TdoV2scH, TdoV2scL	SDO data output setup to SCK edge		Tcy	—	—	ns	
SP82*	TssL2doV	SDO data output valid after $\overline{SS}$↓ edge		—	—	50	ns	
SP83*	TscH2ssH, TscL2ssH	$\overline{SS}$ ↑ after SCK edge		1.5TCY + 40	—	—	ns	

* These parameters are characterized but not tested.

† Data in "Typ" column is at 3.0V, 25°C unless otherwise stated. These parameters are for design guidance only and are not tested.

FIGURE 30-20: I²C™ BUS START/STOP BITS TIMING

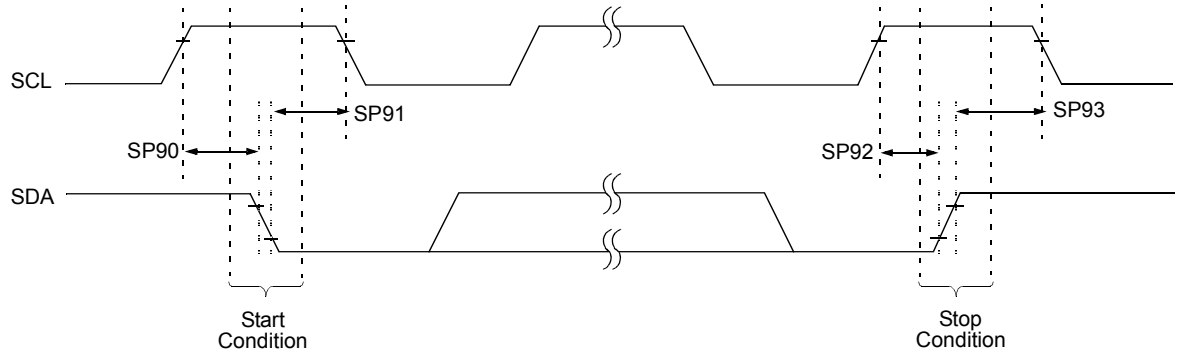

Note: Refer to Figure 30-4 for load conditions.

TABLE 30-21: I²C™ BUS START/STOP BITS REQUIREMENTS

Standard Operating Conditions (unless otherwise stated)								
Param No.	**Symbol**	**Characteristic**		**Min.**	**Typ**	**Max.**	**Units**	**Conditions**
SP90*	TSU:STA	Start condition Setup time	100 kHz mode	4700	—	—	ns	Only relevant for Repeated Start condition
			400 kHz mode	600	—	—		
SP91*	THD:STA	Start condition Hold time	100 kHz mode	4000	—	—	ns	After this period, the first clock pulse is generated
			400 kHz mode	600	—	—		
SP92*	TSU:STO	Stop condition Setup time	100 kHz mode	4700	—	—	ns	
			400 kHz mode	600	—	—		
SP93	THD:STO	Stop condition Hold time	100 kHz mode	4000	—	—	ns	
			400 kHz mode	600	—	—		

* These parameters are characterized but not tested.

FIGURE 30-21: I²C™ BUS DATA TIMING

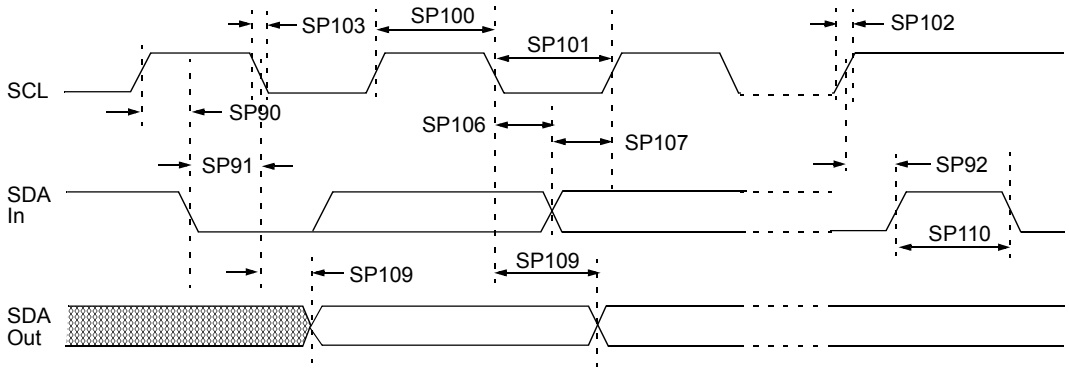

Note: Refer to Figure 30-4 for load conditions.

© 2012-2014 Microchip Technology Inc.

TABLE 30-22: I²C™ BUS DATA REQUIREMENTS

Standard Operating Conditions (unless otherwise stated)							
Param. No.	**Symbol**	**Characteristic**		**Min.**	**Max.**	**Units**	**Conditions**
SP100*	THIGH	Clock high time	100 kHz mode	4.0	—	μs	Device must operate at a minimum of 1.5 MHz
			400 kHz mode	0.6	—	μs	Device must operate at a minimum of 10 MHz
			SSP module	1.5TCY	—		
SP101*	TLOW	Clock low time	100 kHz mode	4.7	—	μs	Device must operate at a minimum of 1.5 MHz
			400 kHz mode	1.3	—	μs	Device must operate at a minimum of 10 MHz
			SSP module	1.5TCY	—		
SP102*	TR	SDA and SCL rise time	100 kHz mode	—	1000	ns	
			400 kHz mode	20 + 0.1CB	300	ns	CB is specified to be from 10-400 pF
SP103*	TF	SDA and SCL fall time	100 kHz mode	—	250	ns	
			400 kHz mode	20 + 0.1CB	250	ns	CB is specified to be from 10-400 pF
SP106*	THD:DAT	Data input hold time	100 kHz mode	0	—	ns	
			400 kHz mode	0	0.9	μs	
SP107*	TSU:DAT	Data input setup time	100 kHz mode	250	—	ns	**(Note 2)**
			400 kHz mode	100	—	ns	
SP109*	TAA	Output valid from clock	100 kHz mode	—	3500	ns	**(Note 1)**
			400 kHz mode	—	—	ns	
SP110*	TBUF	Bus free time	100 kHz mode	4.7	—	μs	Time the bus must be free before a new transmission can start
			400 kHz mode	1.3	—	μs	
SP111	CB	Bus capacitive loading		—	400	pF	

* These parameters are characterized but not tested.

Note 1: As a transmitter, the device must provide this internal minimum delay time to bridge the undefined region (min. 300 ns) of the falling edge of SCL to avoid unintended generation of Start or Stop conditions.

2: A Fast mode (400 kHz) I²C™ bus device can be used in a Standard mode (100 kHz) I²C bus system, but the requirement TSU:DAT ≥ 250 ns must then be met. This will automatically be the case if the device does not stretch the low period of the SCL signal. If such a device does stretch the low period of the SCL signal, it must output the next data bit to the SDA line TR max. + TSU:DAT = 1000 + 250 = 1250 ns (according to the Standard mode I²C bus specification), before the SCL line is released.

31.0 DC AND AC CHARACTERISTICS GRAPHS AND CHARTS

The graphs and tables provided in this section are for **design guidance** and are **not tested**.

In some graphs or tables, the data presented are **outside specified operating range** (i.e., outside specified V_{DD} range). This is for **information only** and devices are ensured to operate properly only within the specified range.

Unless otherwise noted, all graphs apply to both the F and LF devices.

Note:	The graphs and tables provided following this note are a statistical summary based on a limited number of samples and are provided for informational purposes only. The performance characteristics listed herein are not tested or guaranteed. In some graphs or tables, the data presented may be outside the specified operating range (e.g., outside specified power supply range) and therefore, outside the warranted range.

"Typical" represents the mean of the distribution at 25°C. "Maximum", "Max.", "Minimum" or "Min." represents (mean + 3σ) or (mean - 3σ) respectively, where σ is a standard deviation, over each temperature range.

© 2012-2014 Microchip Technology Inc.

Note: Unless otherwise noted, V_{IN} = 5V, F_{OSC} = 300 kHz, C_{IN} = 0.1 µF, T_A = 25°C.

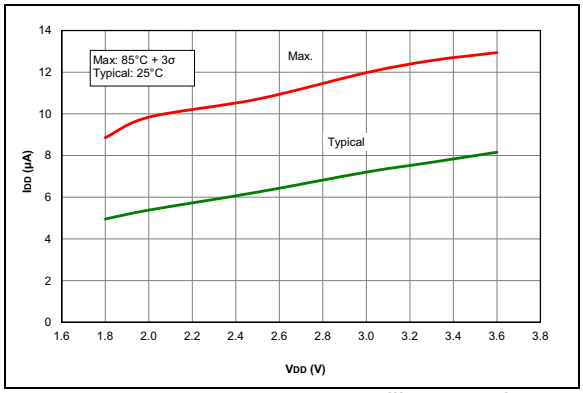

FIGURE 31-1: *IDD, LP Oscillator Mode, Fosc = 32 kHz, PIC16LF1784/6/7 Only.*

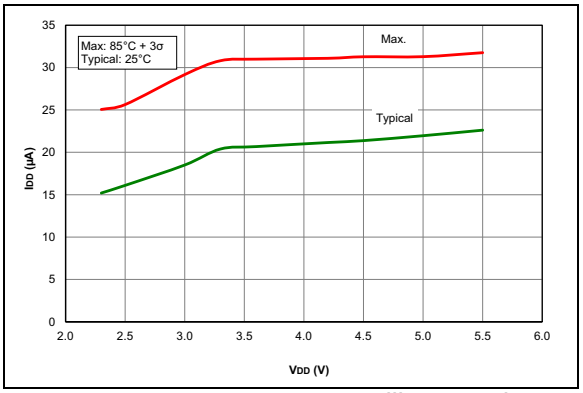

FIGURE 31-2: *IDD, LP Oscillator Mode, Fosc = 32 kHz, PIC16F1784/6/7 Only.*

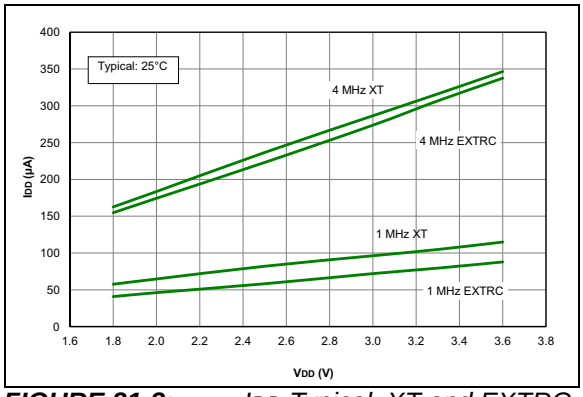

FIGURE 31-3: *IDD Typical, XT and EXTRC Oscillator, PIC16LF1784/6/7 Only.*

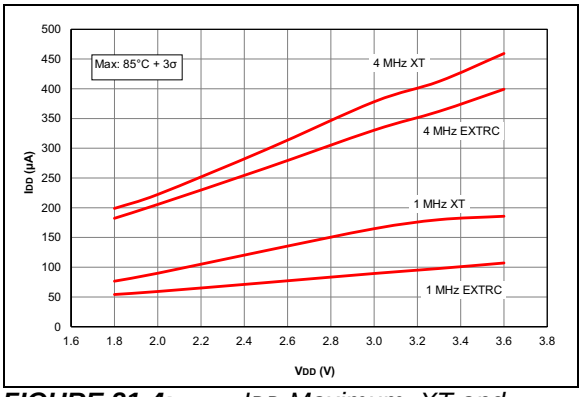

FIGURE 31-4: *IDD Maximum, XT and EXTRC Oscillator, PIC16LF1784/6/7 Only.*

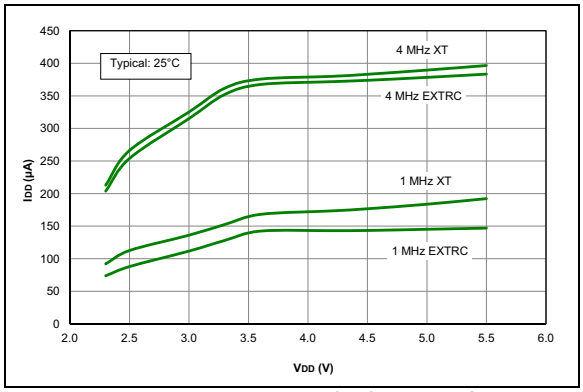

FIGURE 31-5: *IDD Typical, XT and EXTRC Oscillator, PIC16F1784/6/7 Only.*

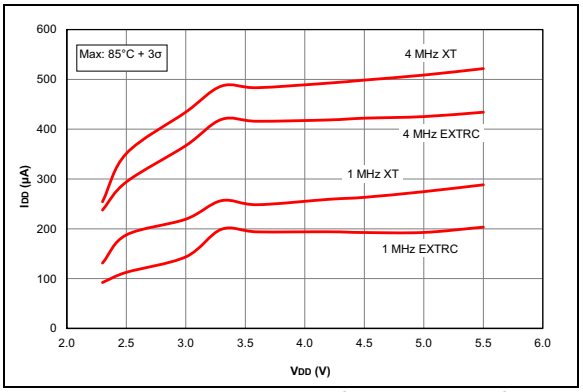

FIGURE 31-6: *IDD Maximum, XT and EXTRC Oscillator, PIC16F1784/6/7 Only.*

© 2012-2014 Microchip Technology Inc.

Note: Unless otherwise noted, VIN = 5V, FOSC = 300 kHz, CIN = 0.1 µF, TA = 25°C.

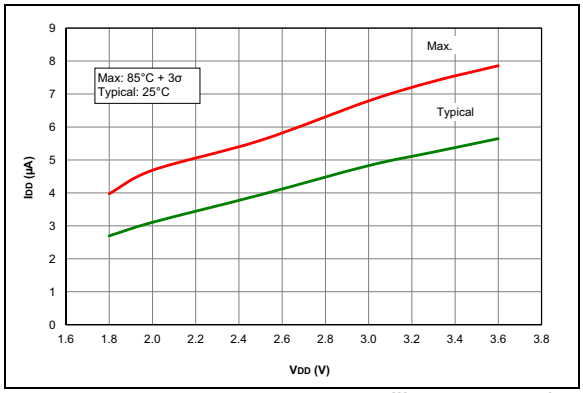

FIGURE 31-7: *IDD, EC Oscillator LP Mode, Fosc = 32 kHz, PIC16LF1784/6/7 Only.*

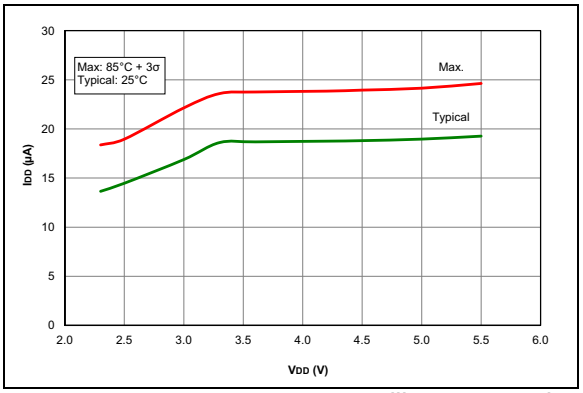

FIGURE 31-8: *IDD, EC Oscillator LP Mode, Fosc = 32 kHz, PIC16F1784/6/7 Only.*

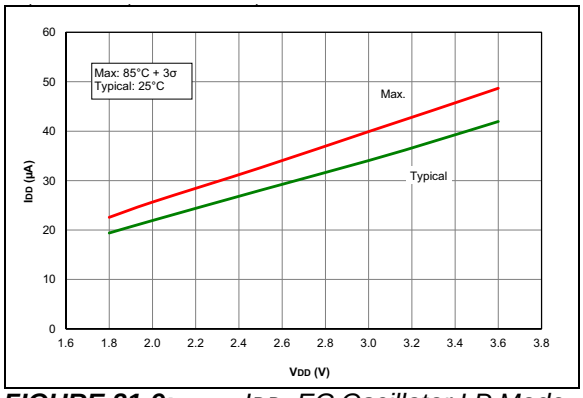

FIGURE 31-9: *IDD, EC Oscillator LP Mode, Fosc = 500 kHz, PIC16LF1784/6/7 Only.*

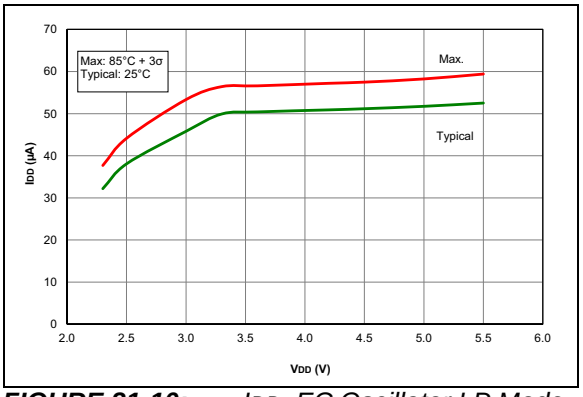

FIGURE 31-10: *IDD, EC Oscillator LP Mode, Fosc = 500 kHz, PIC16F1784/6/7 Only.*

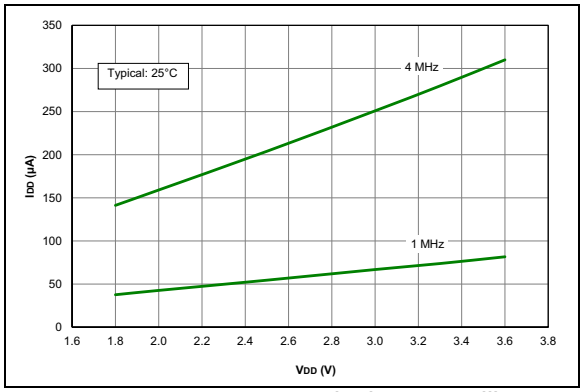

FIGURE 31-11: *IDD Typical, EC Oscillator MP Mode, PIC16LF1784/6/7 Only.*

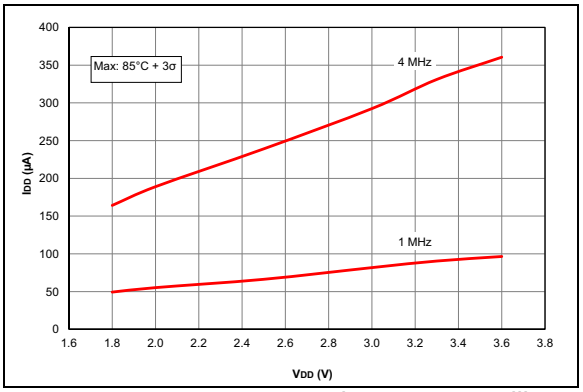

FIGURE 31-12: *IDD Maximum, EC Oscillator MP Mode, PIC16LF1784/6/7 Only.*

Note: Unless otherwise noted, VIN = 5V, FOSC = 300 kHz, CIN = 0.1 µF, TA = 25°C.

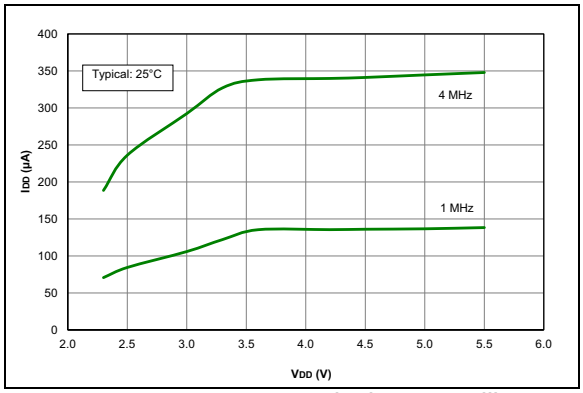

FIGURE 31-13: *IDD Typical, EC Oscillator MP Mode, PIC16F1784/6/7 Only.*

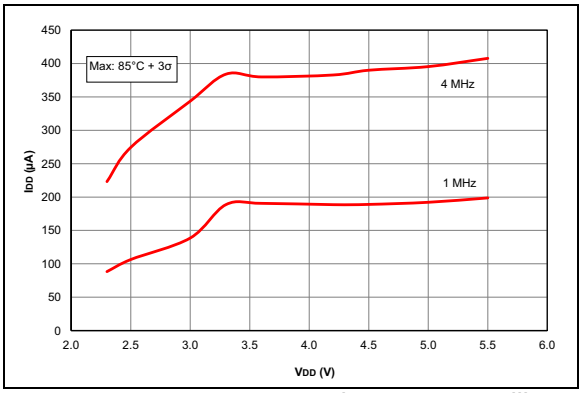

FIGURE 31-14: *IDD Maximum, EC Oscillator MP Mode, PIC16F1784/6/7 Only.*

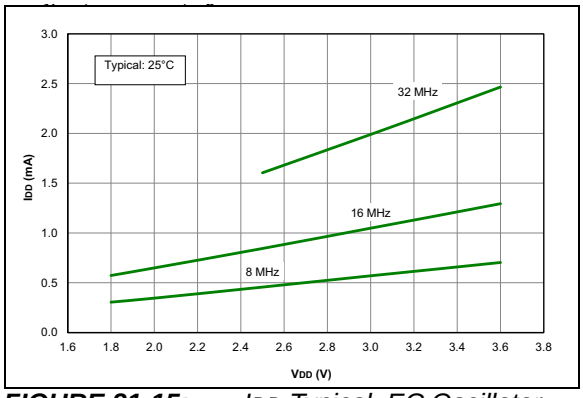

FIGURE 31-15: *IDD Typical, EC Oscillator HP Mode, PIC16LF1784/6/7 Only.*

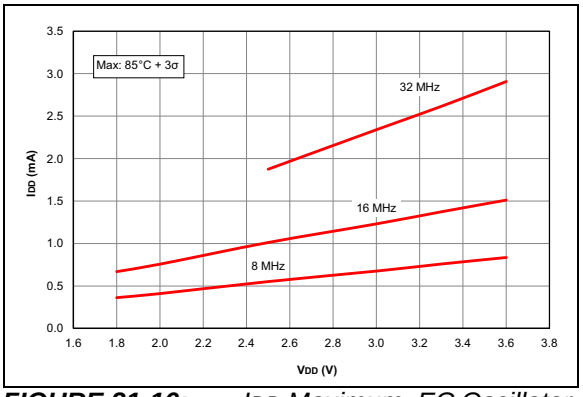

FIGURE 31-16: *IDD Maximum, EC Oscillator HP Mode, PIC16LF1784/6/7 Only.*

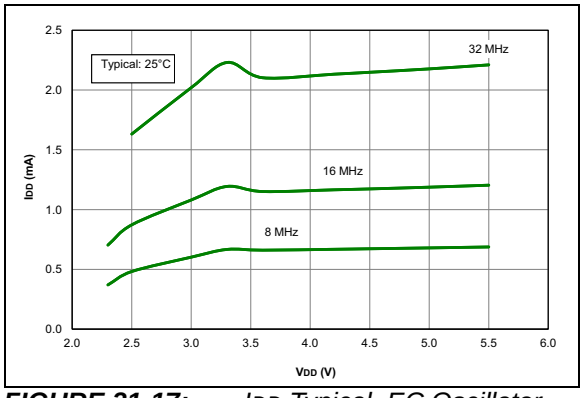

FIGURE 31-17: *IDD Typical, EC Oscillator HP Mode, PIC16F1784/6/7 Only.*

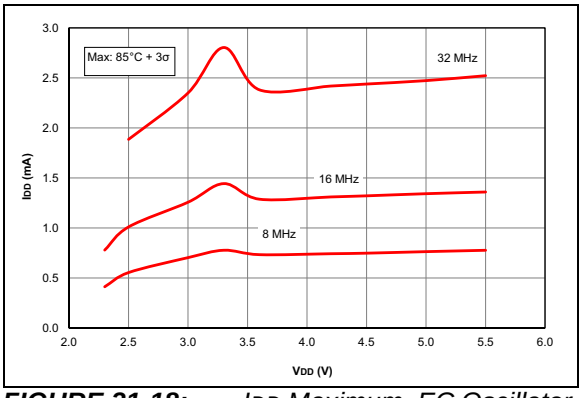

FIGURE 31-18: *IDD Maximum, EC Oscillator HP Mode, PIC16F1784/6/7 Only.*

© 2012-2014 Microchip Technology Inc.

Note: Unless otherwise noted, V_{IN} = 5V, F_{OSC} = 300 kHz, C_{IN} = 0.1 µF, T_A = 25°C.

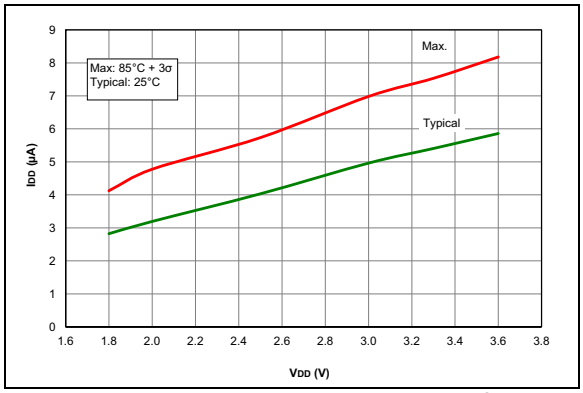

FIGURE 31-19: *IDD, LFINTOSC Mode, Fosc = 31 kHz, PIC16LF1784/6/7 Only.*

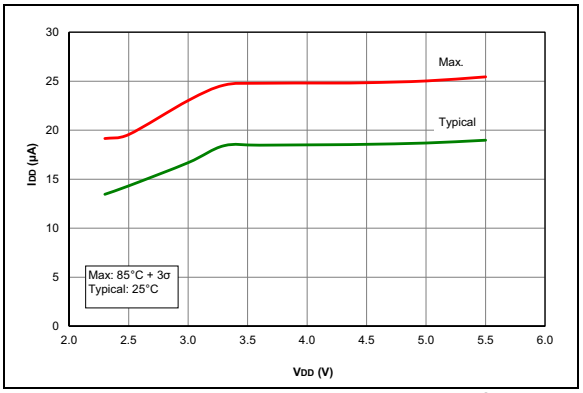

FIGURE 31-20: *IDD, LFINTOSC Mode, Fosc = 31 kHz, PIC16F1784/6/7 Only.*

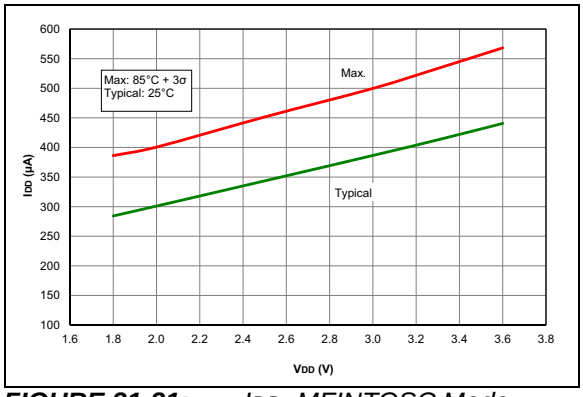

FIGURE 31-21: *IDD, MFINTOSC Mode, Fosc = 500 kHz, PIC16LF1784/6/7 Only.*

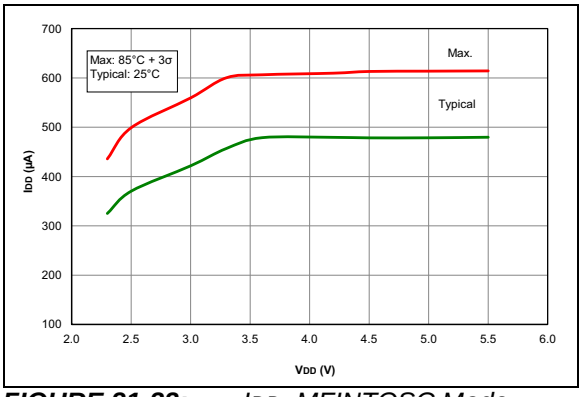

FIGURE 31-22: *IDD, MFINTOSC Mode, Fosc = 500 kHz, PIC16F1784/6/7 Only.*

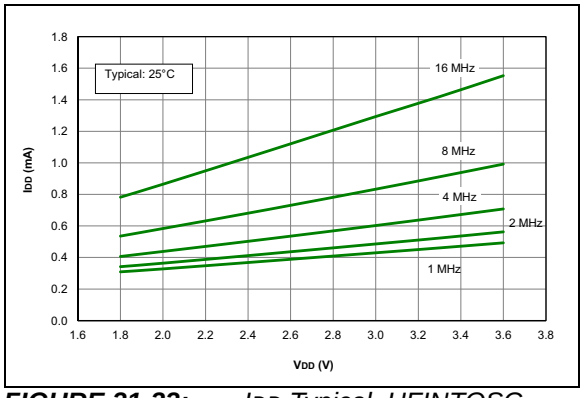

FIGURE 31-23: *IDD Typical, HFINTOSC Mode, PIC16LF1784/6/7 Only.*

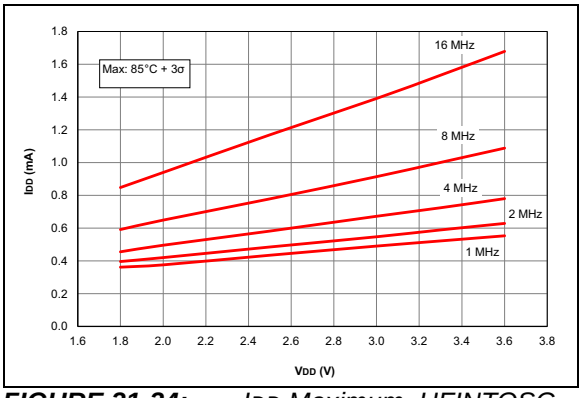

FIGURE 31-24: *IDD Maximum, HFINTOSC Mode, PIC16LF1784/6/7 Only.*

Note: Unless otherwise noted, V_{IN} = 5V, F_{OSC} = 300 kHz, C_{IN} = 0.1 µF, T_A = 25°C.

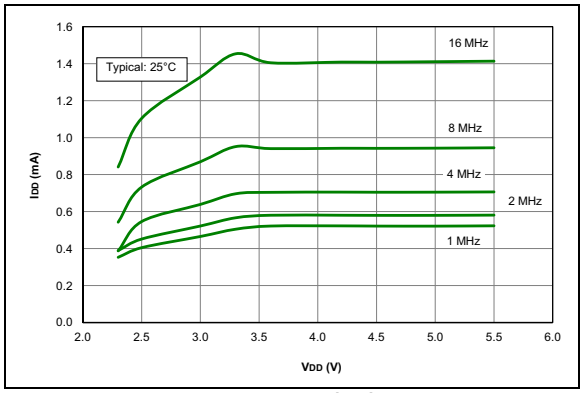

FIGURE 31-25: *IDD Typical, HFINTOSC Mode, PIC16F1784/6/7 Only.*

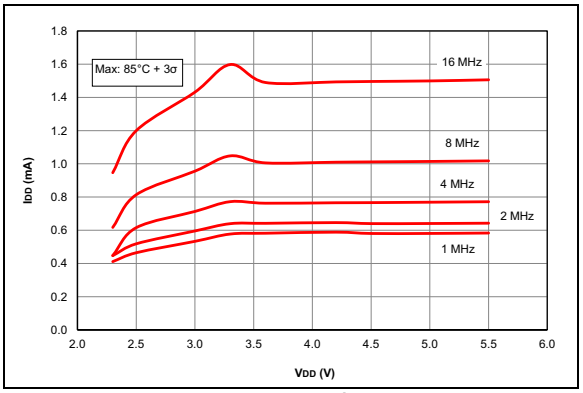

FIGURE 31-26: *IDD Maximum, HFINTOSC Mode, PIC16F1784/6/7 Only.*

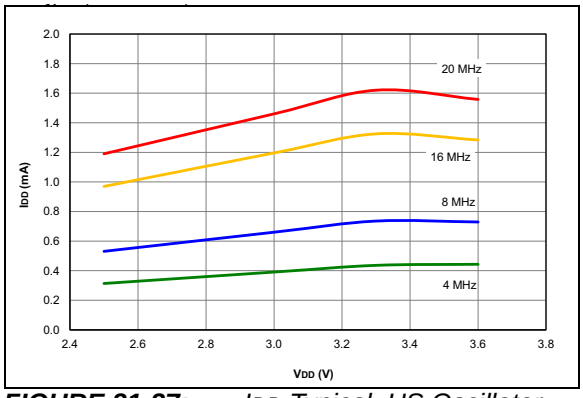

FIGURE 31-27: *IDD Typical, HS Oscillator, 25°C, PIC16LF1784/6/7 Only.*

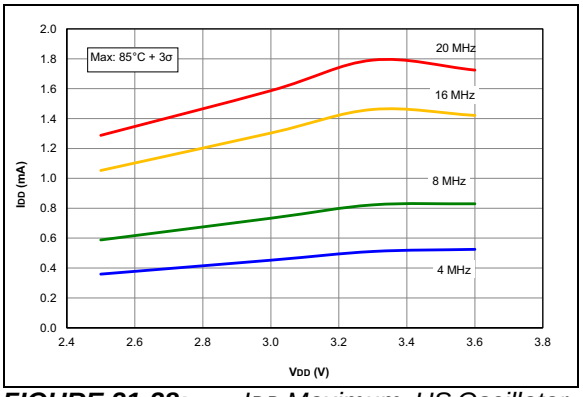

FIGURE 31-28: *IDD Maximum, HS Oscillator, PIC16LF1784/6/7 Only.*

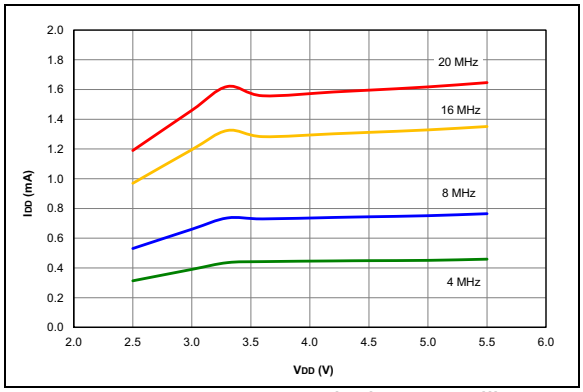

FIGURE 31-29: *IDD Typical, HS Oscillator, 25°C, PIC16F1784/6/7 Only.*

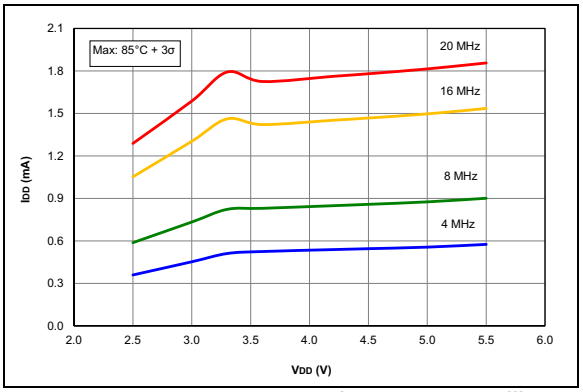

FIGURE 31-30: *IDD Maximum, HS Oscillator, PIC16F1784/6/7 Only.*

© 2012-2014 Microchip Technology Inc.

Note: Unless otherwise noted, V_{IN} = 5V, F_{OSC} = 300 kHz, C_{IN} = 0.1 µF, T_A = 25°C.

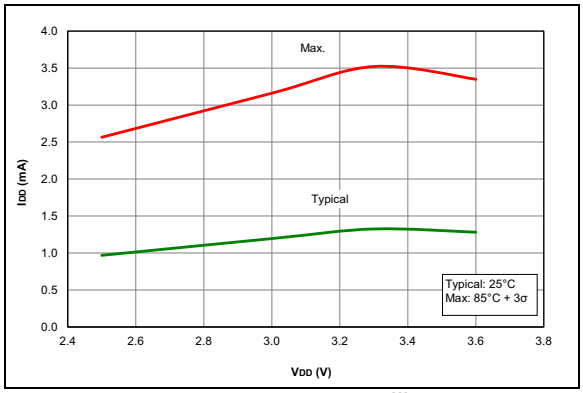

FIGURE 31-31: *I_{DD}, HS Oscillator, 32 MHz (8 MHz + 4x PLL), PIC16LF1784/6/7 Only.*

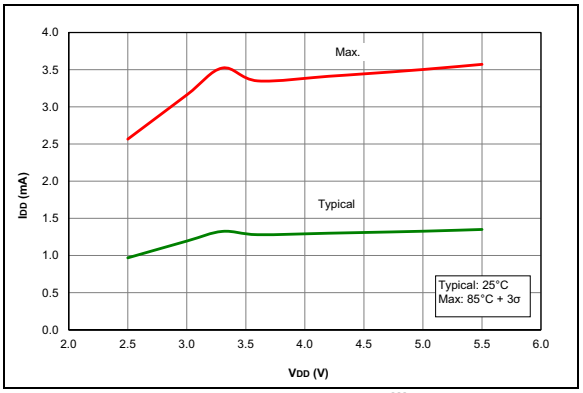

FIGURE 31-32: *I_{DD}, HS Oscillator, 32 MHz (8 MHz + 4x PLL), PIC16F1784/6/7 Only.*

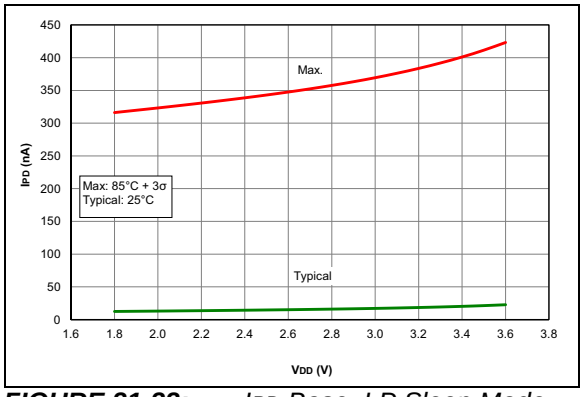

FIGURE 31-33: *I_{PD} Base, LP Sleep Mode, PIC16LF1784/6/7 Only.*

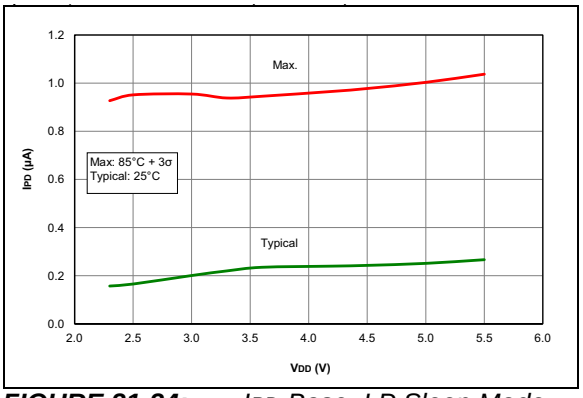

FIGURE 31-34: *I_{PD} Base, LP Sleep Mode (VREGPM = 1), PIC16F1784/6/7 Only.*

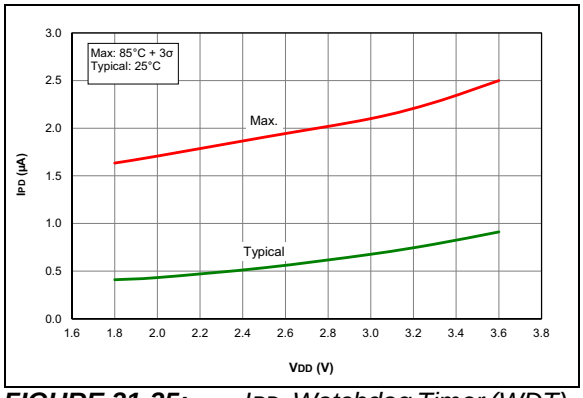

FIGURE 31-35: *I_{PD}, Watchdog Timer (WDT), PIC16LF1784/6/7 Only.*

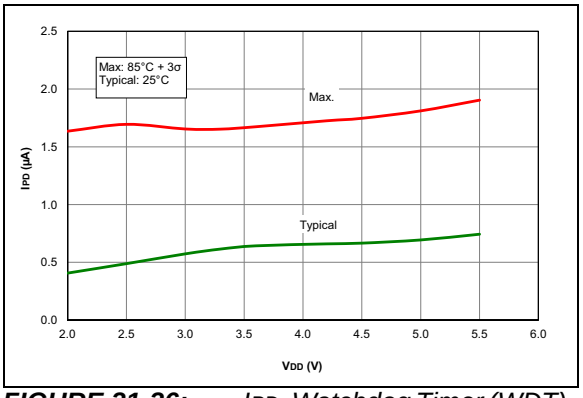

FIGURE 31-36: *I_{PD}, Watchdog Timer (WDT), PIC16F1784/6/7 Only.*

Note: Unless otherwise noted, V_{IN} = 5V, F_{OSC} = 300 kHz, C_{IN} = 0.1 µF, T_A = 25°C.

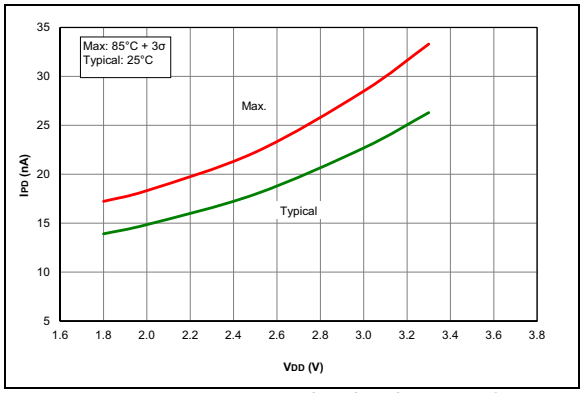

FIGURE 31-37: *IPD, Fixed Voltage Reference (FVR), PIC16LF1784/6/7 Only.*

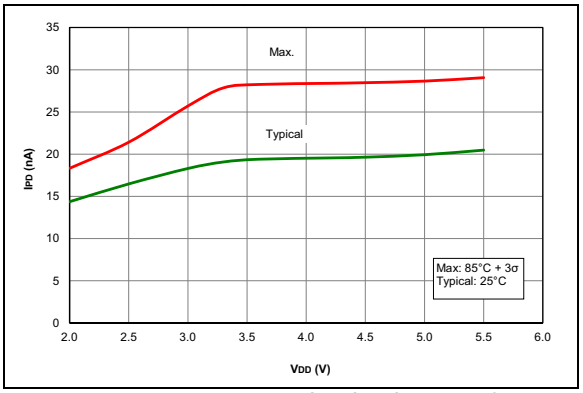

FIGURE 31-38: *IPD, Fixed Voltage Reference (FVR), PIC16F1784/6/7 Only.*

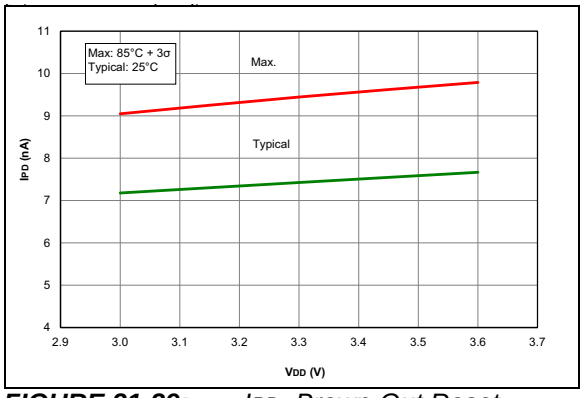

FIGURE 31-39: *IPD, Brown-Out Reset (BOR), BORV = 1, PIC16LF1784/6/7 Only.*

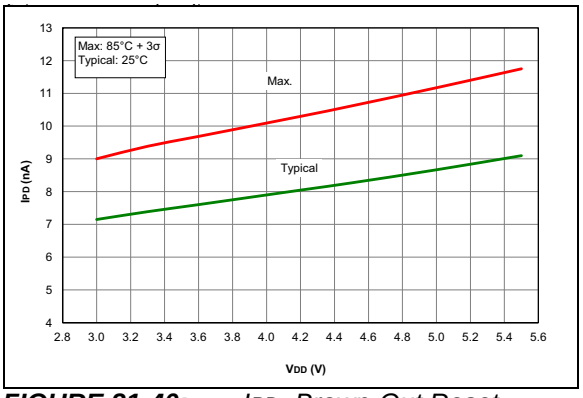

FIGURE 31-40: *IPD, Brown-Out Reset (BOR), BORV = 1, PIC16F1784/6/7 Only.*

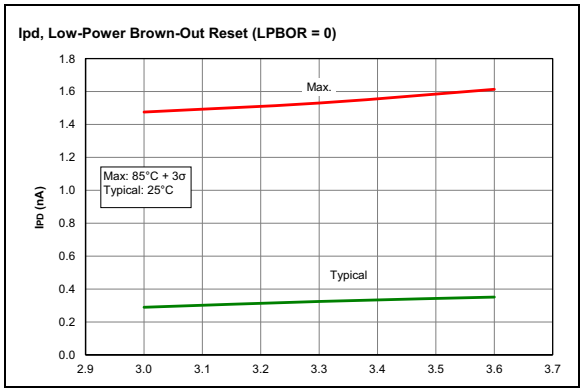

FIGURE 31-41: *IPD, LP Brown-Out Reset (LPBOR = 0), PIC16LF1784/6/7 Only.*

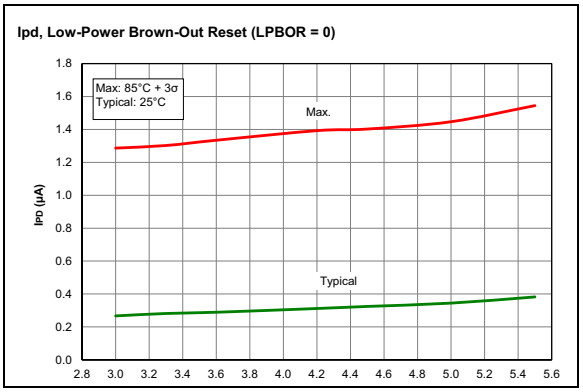

FIGURE 31-42: *IPD, LP Brown-Out Reset (LPBOR = 0), PIC16F1784/6/7 Only.*

© 2012-2014 Microchip Technology Inc.

Note: Unless otherwise noted, V_{IN} = 5V, F_{OSC} = 300 kHz, C_{IN} = 0.1 µF, T_A = 25°C.

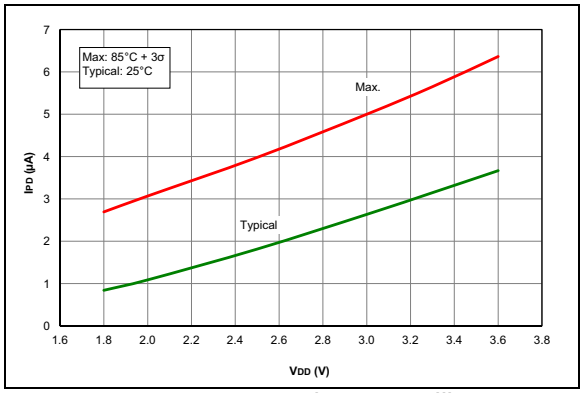

FIGURE 31-43: *I_{PD}, Timer1 Oscillator, F_{OSC} = 32 kHz, PIC16LF1784/6/7 Only.*

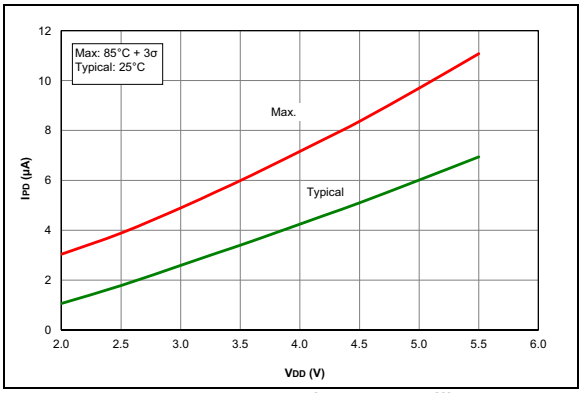

FIGURE 31-44: *I_{PD}, Timer1 Oscillator, F_{OSC} = 32 kHz, PIC16F1784/6/7 Only.*

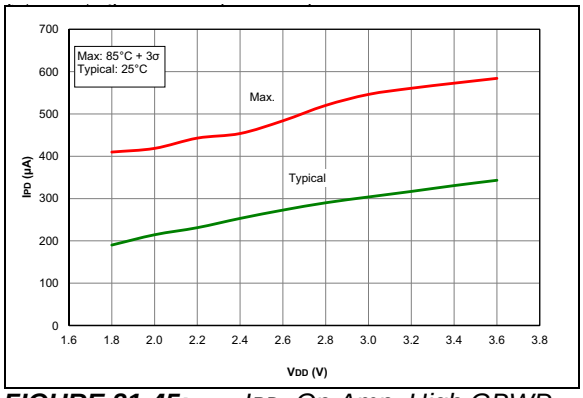

FIGURE 31-45: *I_{PD}, Op Amp, High GBWP Mode (OPAxSP = 1), PIC16LF1784/6/7 Only.*

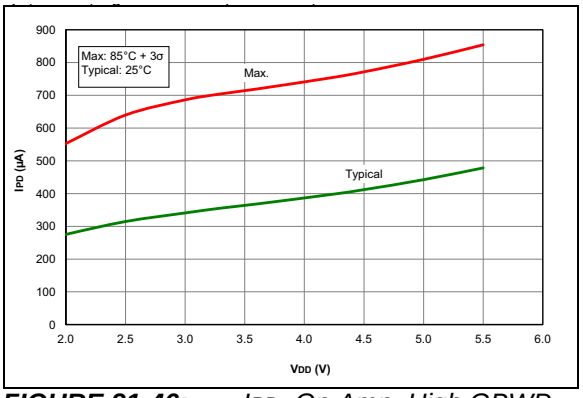

FIGURE 31-46: *I_{PD}, Op Amp, High GBWP Mode (OPAxSP = 1), PIC16F1784/6/7 Only.*

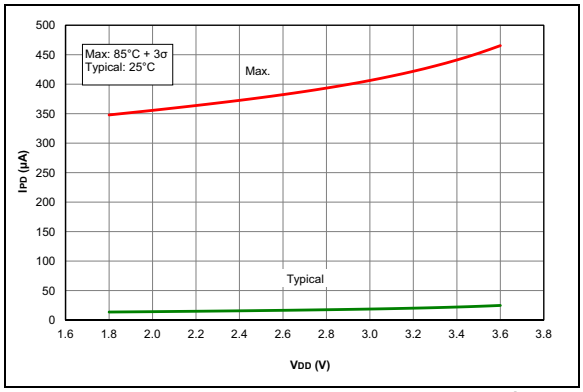

FIGURE 31-47: *I_{PD}, ADC Non-Converting, PIC16LF1784/6/7 Only.*

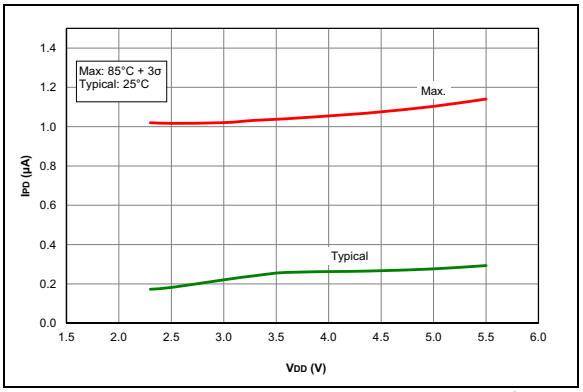

FIGURE 31-48: *I_{PD}, ADC Non-Converting, PIC16F1784/6/7 Only.*

Note: Unless otherwise noted, V_{IN} = 5V, F_{OSC} = 300 kHz, C_{IN} = 0.1 µF, T_A = 25°C.

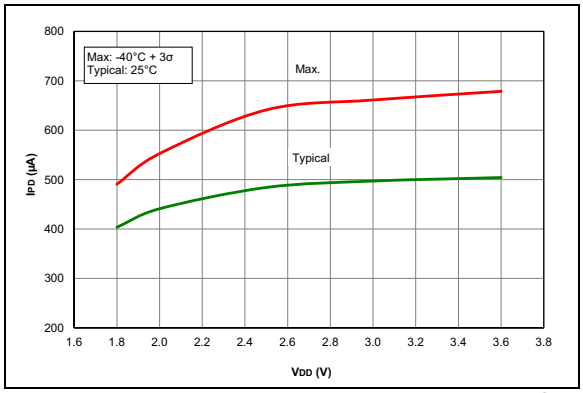

FIGURE 31-49: *I_{PD}, Comparator, NP Mode (CxSP = 1), PIC16LF1784/6/7 Only.*

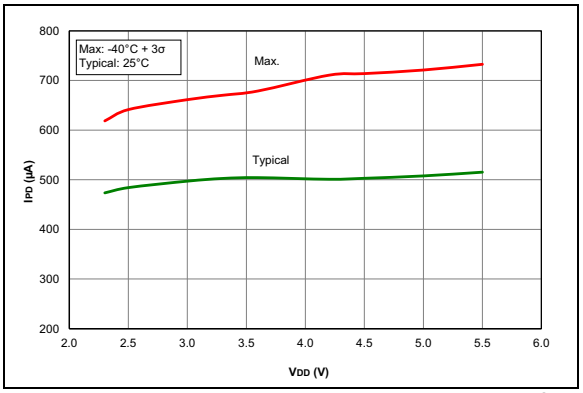

FIGURE 31-50: *I_{PD}, Comparator, NP Mode (CxSP = 1), PIC16F1784/6/7 Only.*

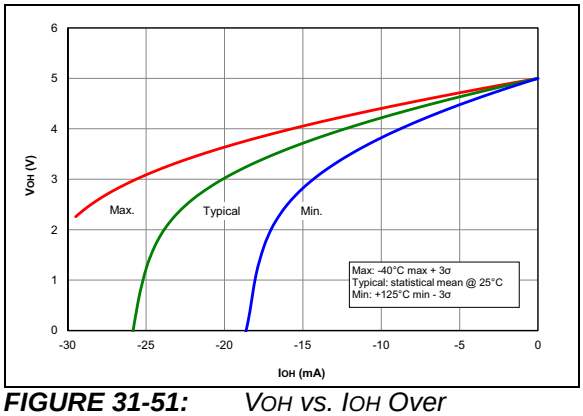

FIGURE 31-51: *V_{OH} vs. I_{OH} Over Temperature, V_{DD} = 5.0V, PIC16F1784/6/7 Only.*

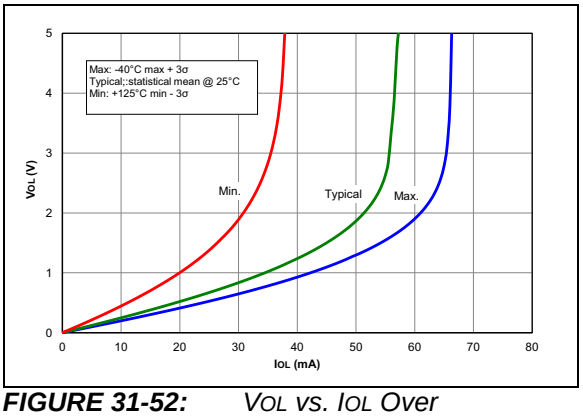

FIGURE 31-52: *V_{OL} vs. I_{OL} Over Temperature, V_{DD} = 5.0V, PIC16F1784/6/7 Only.*

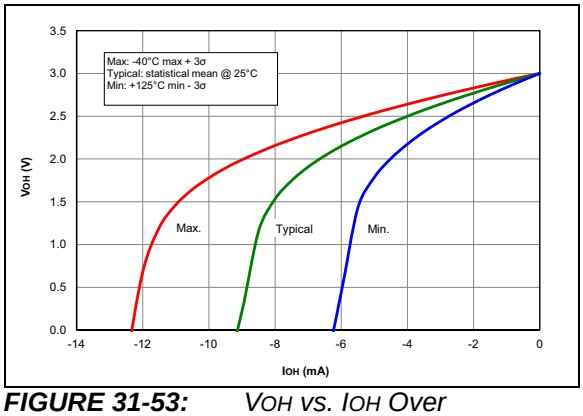

FIGURE 31-53: *V_{OH} vs. I_{OH} Over Temperature, V_{DD} = 3.0V.*

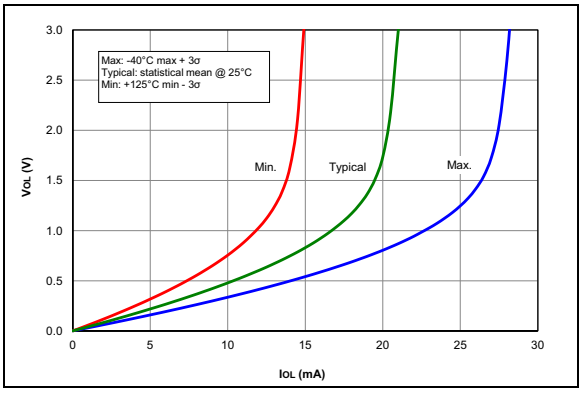

FIGURE 31-54: *V_{OL} vs. I_{OL} Over Temperature, V_{DD} = 3.0V.*

© 2012-2014 Microchip Technology Inc.

Note: Unless otherwise noted, V_{IN} = 5V, F_{OSC} = 300 kHz, C_{IN} = 0.1 µF, T_A = 25°C.

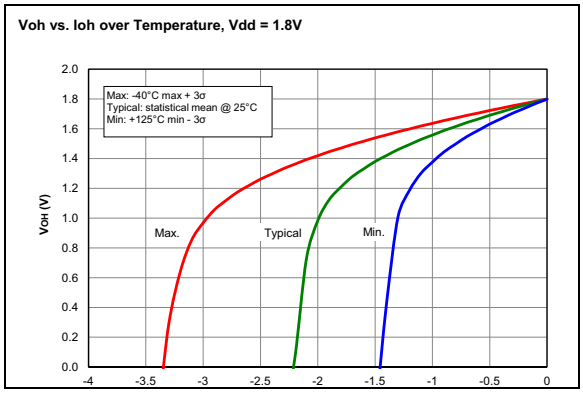

FIGURE 31-55: *V_{OH} vs. I_{OH} Over Temperature, V_{DD} = 1.8V, PIC16LF1784/6/7 Only.*

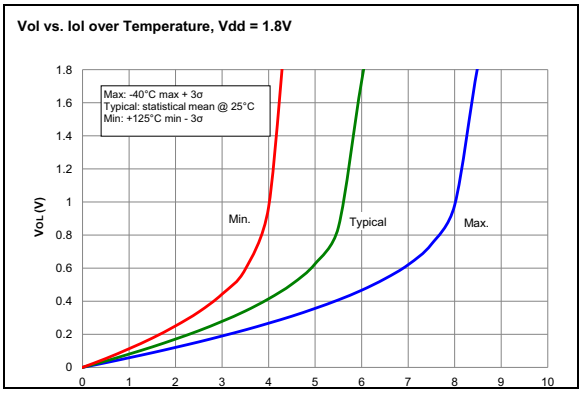

FIGURE 31-56: *V_{OL} vs. I_{OL} Over Temperature, V_{DD} = 1.8V, PIC16LF1784/6/7 Only.*

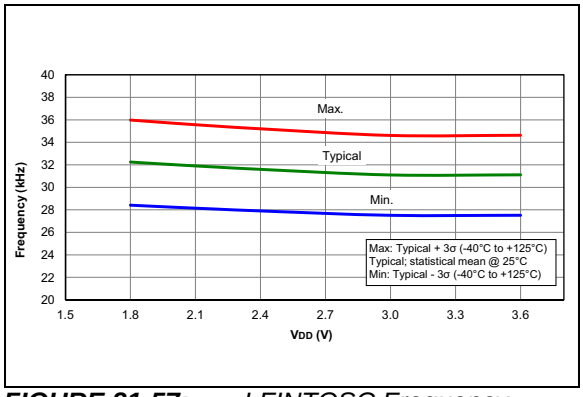

FIGURE 31-57: *LFINTOSC Frequency, PIC16LF1784/6/7 Only.*

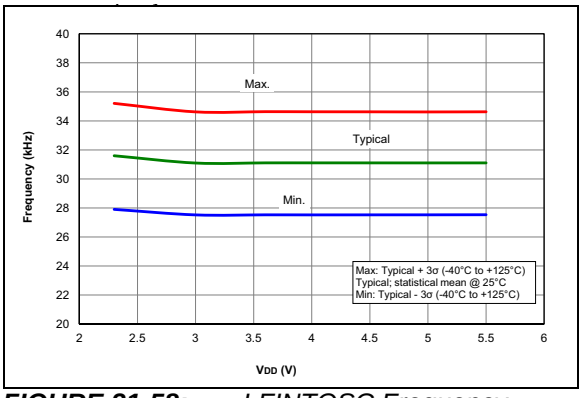

FIGURE 31-58: *LFINTOSC Frequency, PIC16F1784/6/7 Only.*

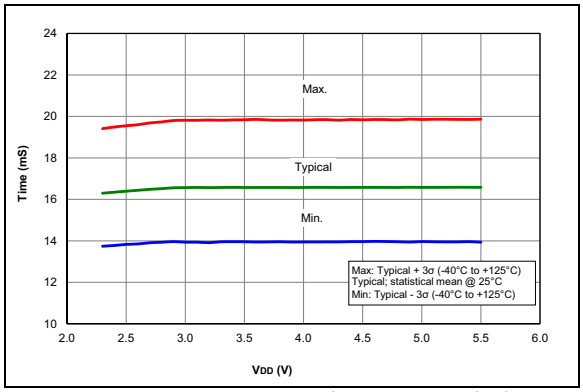

FIGURE 31-59: *WDT Time-Out Period, PIC16F1784/6/7 Only.*

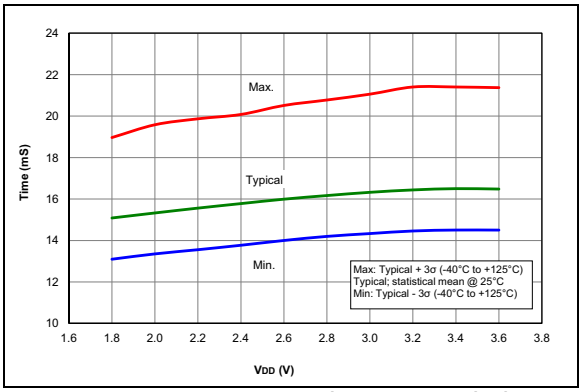

FIGURE 31-60: *WDT Time-Out Period, PIC16LF1784/6/7 Only.*

Note: Unless otherwise noted, V_{IN} = 5V, F_{OSC} = 300 kHz, C_{IN} = 0.1 µF, T_A = 25°C.

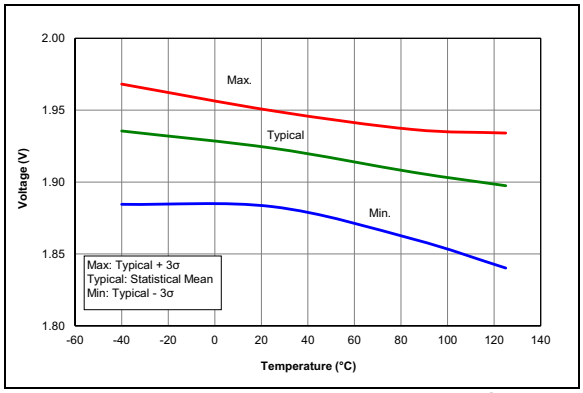

FIGURE 31-61: *Brown-Out Reset Voltage, Low Trip Point (BORV = 1), PIC16LF1784/6/7 Only.*

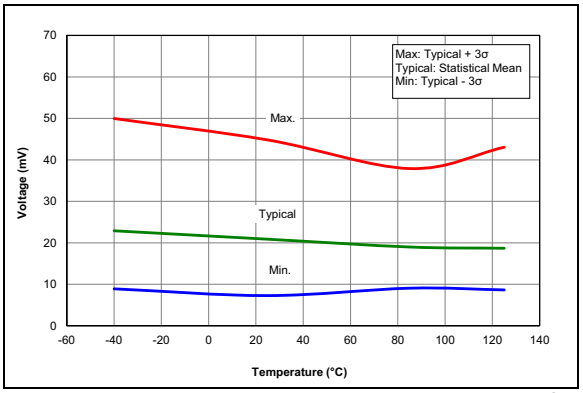

FIGURE 31-62: *Brown-Out Reset Hysteresis, Low Trip Point (BORV = 1), PIC16LF1784/6/7 Only.*

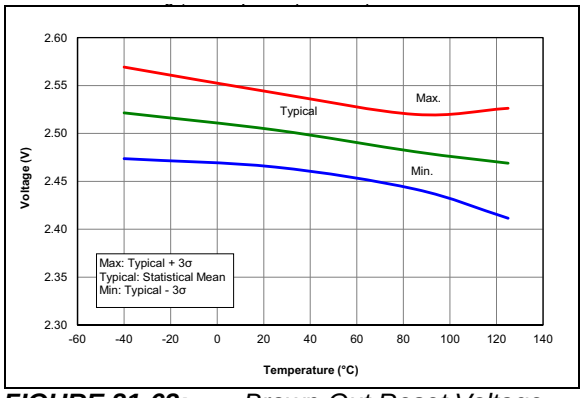

FIGURE 31-63: *Brown-Out Reset Voltage, Low Trip Point (BORV = 1), PIC16F1784/6/7 Only.*

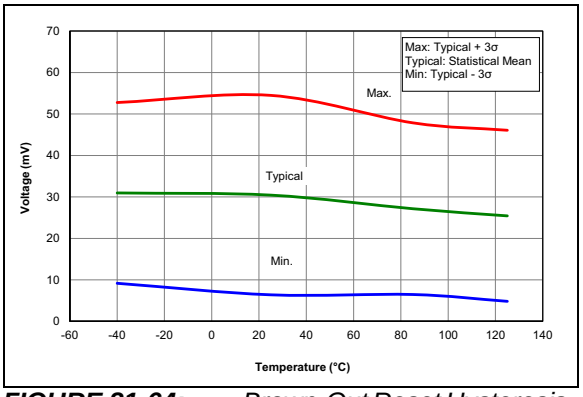

FIGURE 31-64: *Brown-Out Reset Hysteresis, Low Trip Point (BORV = 1), PIC16F1784/6/7 Only.*

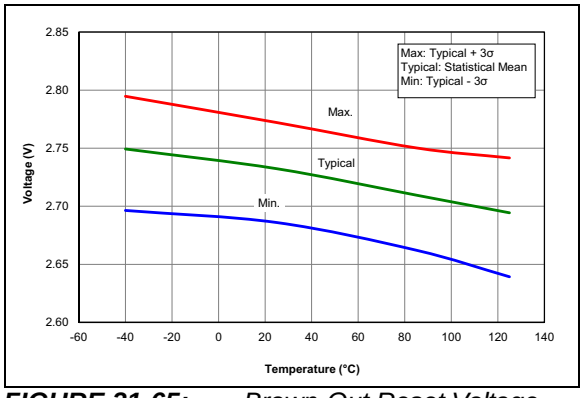

FIGURE 31-65: *Brown-Out Reset Voltage, High Trip Point (BORV = 0).*

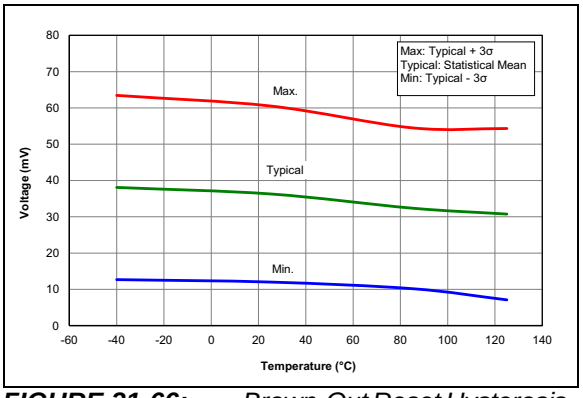

FIGURE 31-66: *Brown-Out Reset Hysteresis, High Trip Point (BORV = 0).*

© 2012-2014 Microchip Technology Inc.

Note: Unless otherwise noted, V_{IN} = 5V, F_{OSC} = 300 kHz, C_{IN} = 0.1 µF, T_A = 25°C.

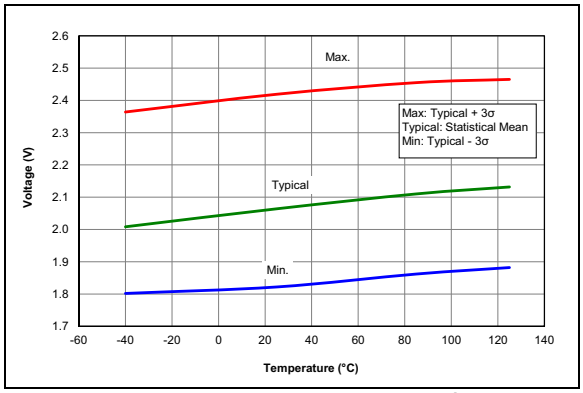

FIGURE 31-67: *LPBOR Reset Voltage.*

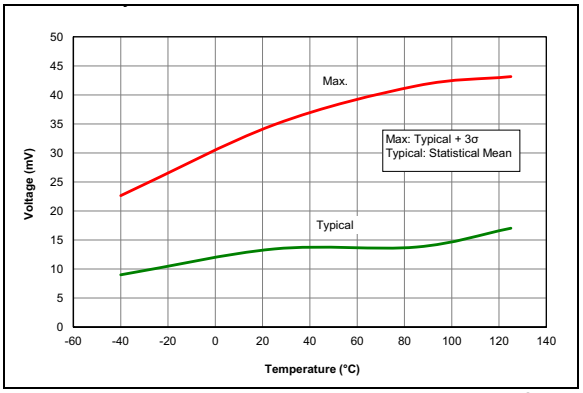

FIGURE 31-68: *LPBOR Reset Hysteresis.*

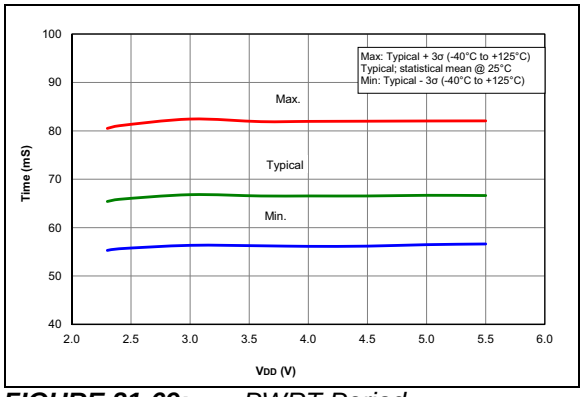

FIGURE 31-69: *PWRT Period, PIC16F1784/6/7 Only.*

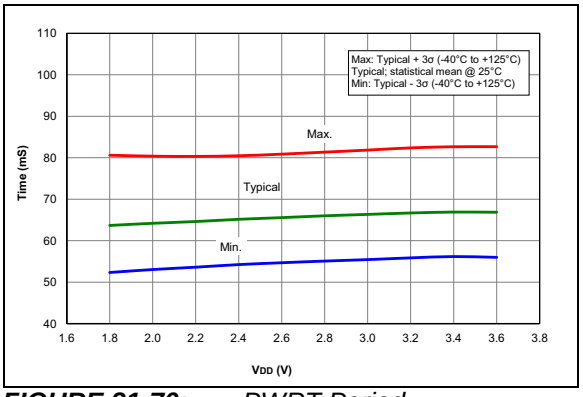

FIGURE 31-70: *PWRT Period, PIC16LF1784/6/7 Only.*

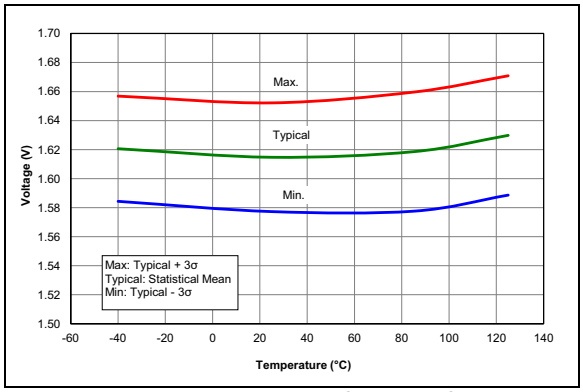

FIGURE 31-71: *POR Release Voltage.*

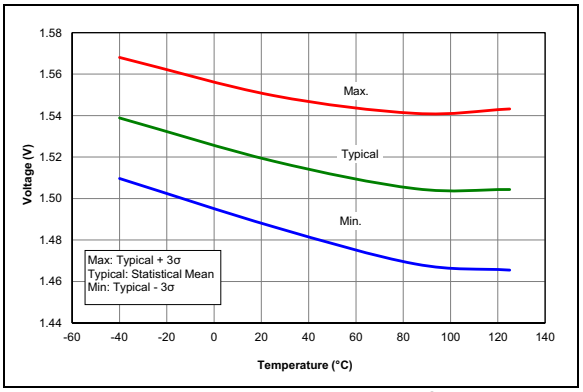

FIGURE 31-72: *POR Rearm Voltage, NP Mode (VREGPM = 0), PIC16F1784/6/7 Only.*

Note: Unless otherwise noted, VIN = 5V, FOSC = 300 kHz, CIN = 0.1 µF, TA = 25°C.

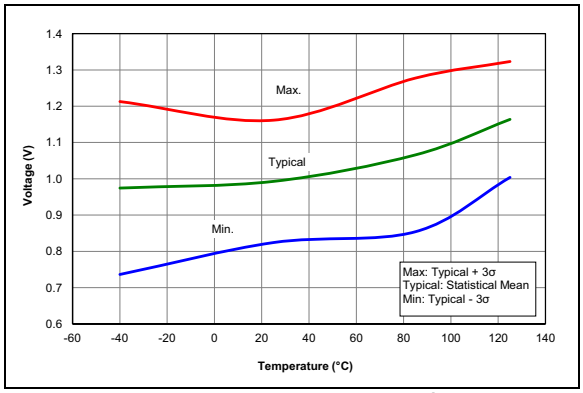

FIGURE 31-73: *POR Rearm Voltage, NP Mode, PIC16LF1784/6/7 Only.*

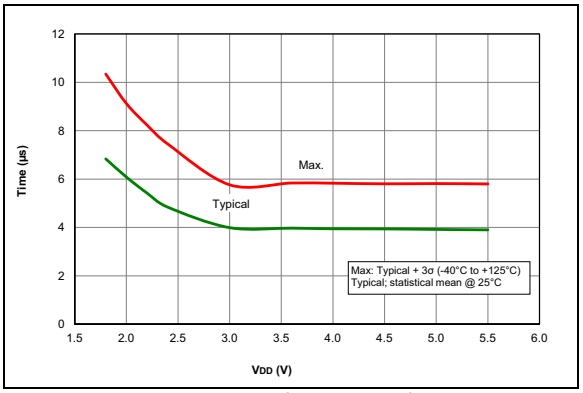

FIGURE 31-74: *Wake From Sleep, VREGPM = 0.*

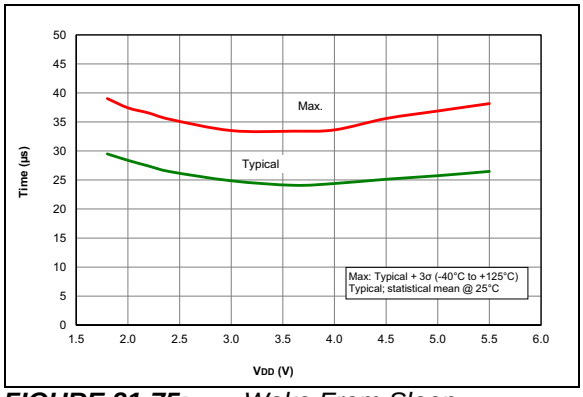

FIGURE 31-75: *Wake From Sleep, VREGPM = 1.*

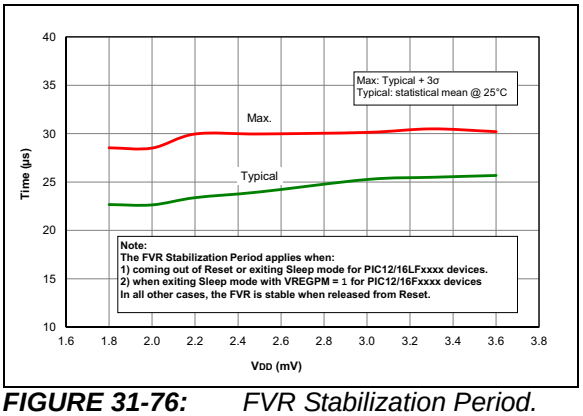

FIGURE 31-76: *FVR Stabilization Period.*

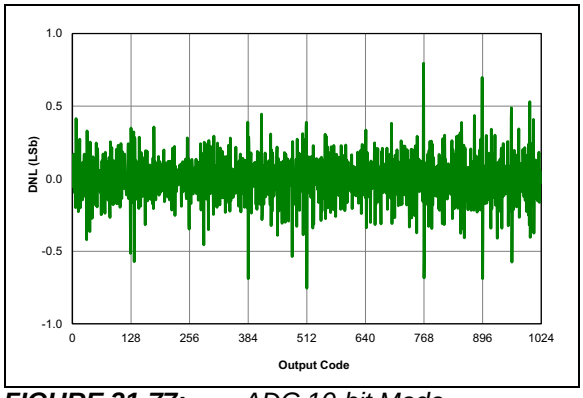

FIGURE 31-77: *ADC 10-bit Mode, Single-Ended DNL, VDD = 3.0V, TAD = 1 µS, 25°C.*

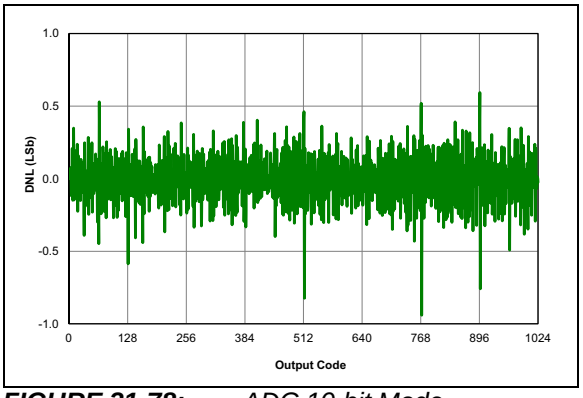

FIGURE 31-78: *ADC 10-bit Mode, Single-Ended DNL, VDD = 3.0V, TAD = 4 µS, 25°C.*

© 2012-2014 Microchip Technology Inc.

Note: Unless otherwise noted, V_{IN} = 5V, F_{OSC} = 300 kHz, C_{IN} = 0.1 µF, T_A = 25°C.

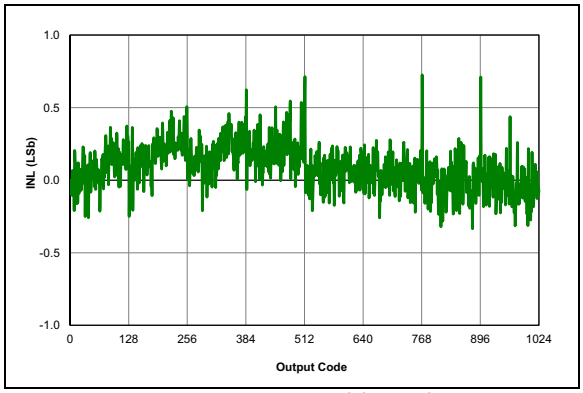

FIGURE 31-79: *ADC 10-bit Mode, Single-Ended INL, V_{DD} = 3.0V, T_{AD} = 1 µS, 25°C.*

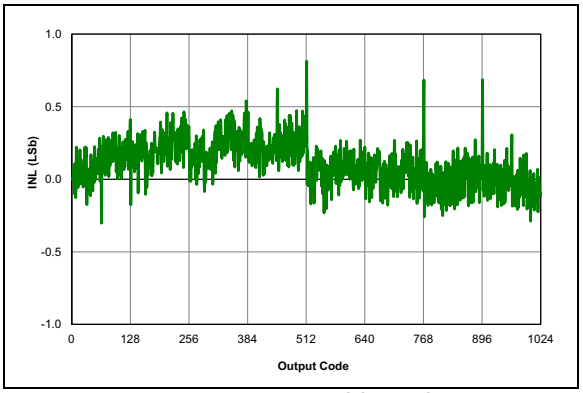

FIGURE 31-80: *ADC 10-bit Mode, Single-Ended INL, V_{DD} = 3.0V, T_{AD} = 4 µS, 25°C.*

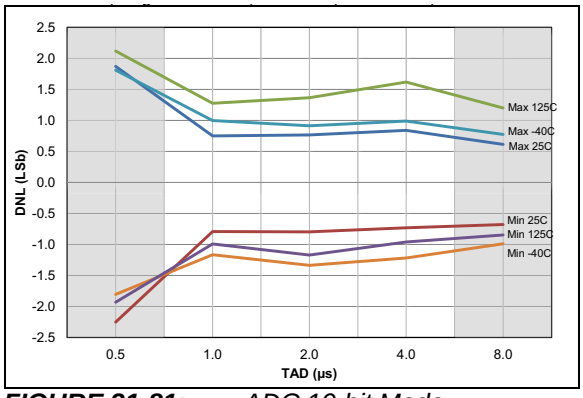

FIGURE 31-81: *ADC 10-bit Mode, Single-Ended DNL, V_{DD} = 3.0V, V_{REF} = 3.0V.*

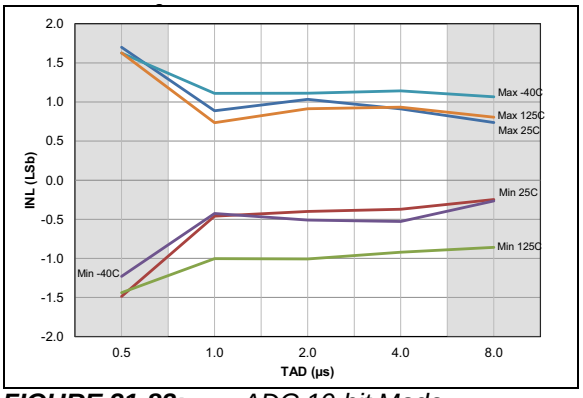

FIGURE 31-82: *ADC 10-bit Mode, Single-Ended INL, V_{DD} = 3.0V, V_{REF} = 3.0V.*

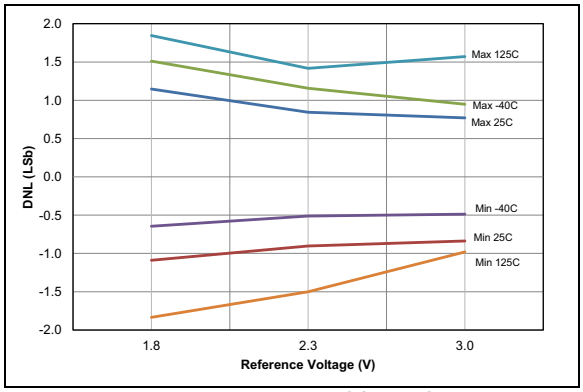

FIGURE 31-83: *ADC 10-bit Mode, Single-Ended DNL, V_{DD} = 3.0V, T_{AD} = 1 µS.*

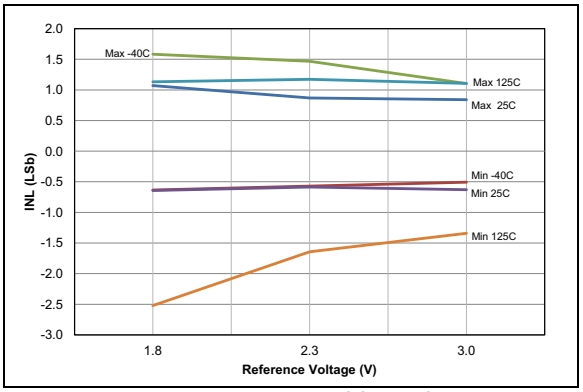

FIGURE 31-84: *ADC 10-bit Mode, Single-Ended INL, V_{DD} = 3.0V, T_{AD} = 1 µS.*

Note: Unless otherwise noted, V_{IN} = 5V, F_{OSC} = 300 kHz, C_{IN} = 0.1 µF, T_A = 25°C.

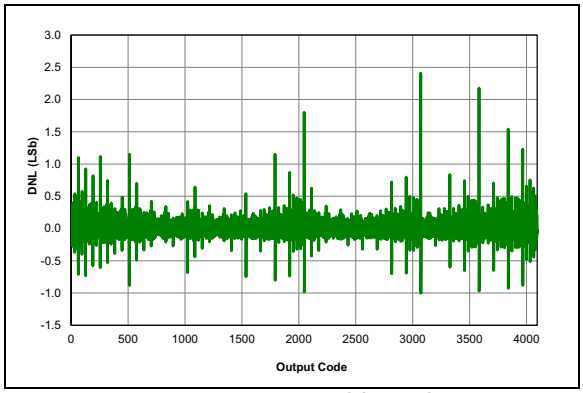

FIGURE 31-85: *ADC 12-bit Mode, Single-Ended DNL, V_{DD} = 3.0V, T_{AD} = 1 µS, 25°C.*

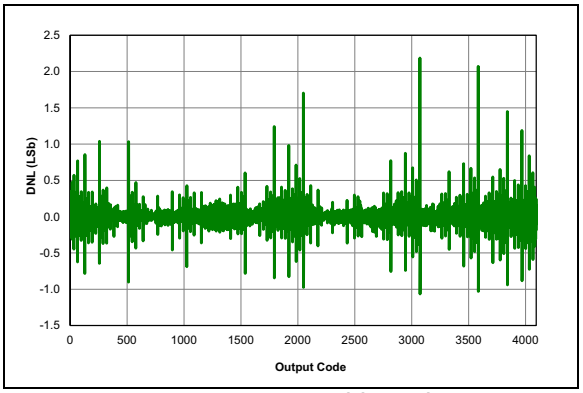

FIGURE 31-86: *ADC 12-bit Mode, Single-Ended DNL, V_{DD} = 3.0V, T_{AD} = 4 µS, 25°C.*

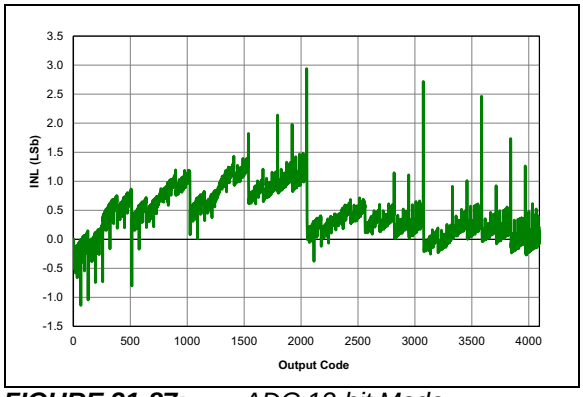

FIGURE 31-87: *ADC 12-bit Mode, Single-Ended INL, V_{DD} = 3.0V, T_{AD} = 1 µS, 25°C.*

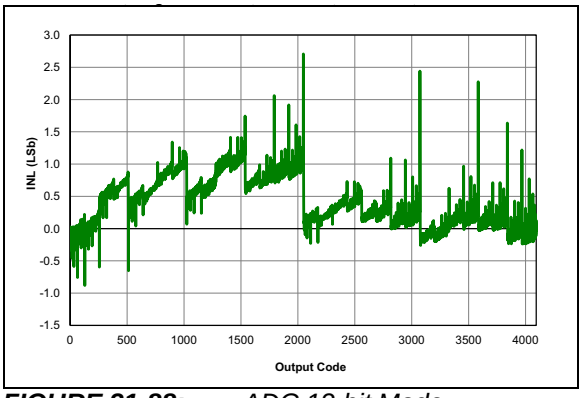

FIGURE 31-88: *ADC 12-bit Mode, Single-Ended INL, V_{DD} = 3.0V, T_{AD} = 4 µS, 25°C.*

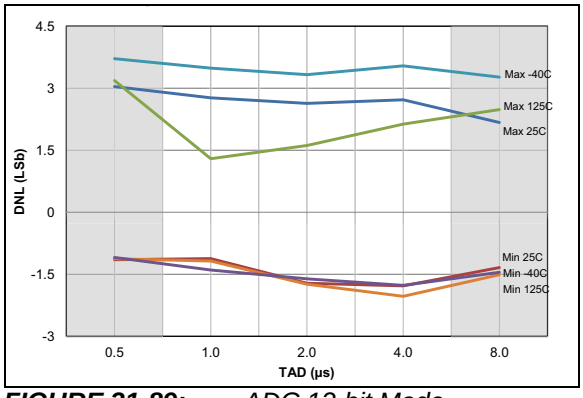

FIGURE 31-89: *ADC 12-bit Mode, Single-Ended DNL, V_{DD} = 3.0V, V_{REF} = 3.0V.*

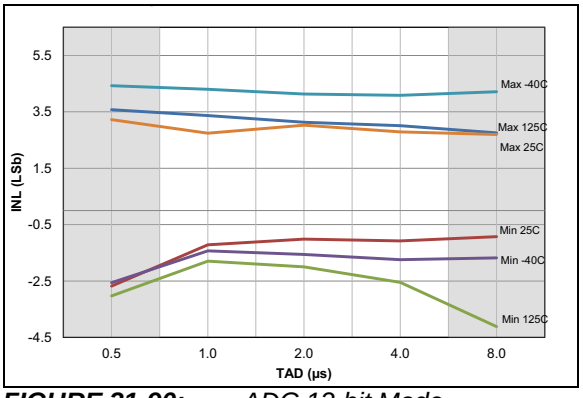

FIGURE 31-90: *ADC 12-bit Mode, Single-Ended INL, V_{DD} = 3.0V, V_{REF} = 3.0V.*

© 2012-2014 Microchip Technology Inc.

Note: Unless otherwise noted, V_{IN} = 5V, F_{OSC} = 300 kHz, C_{IN} = 0.1 µF, T_A = 25°C.

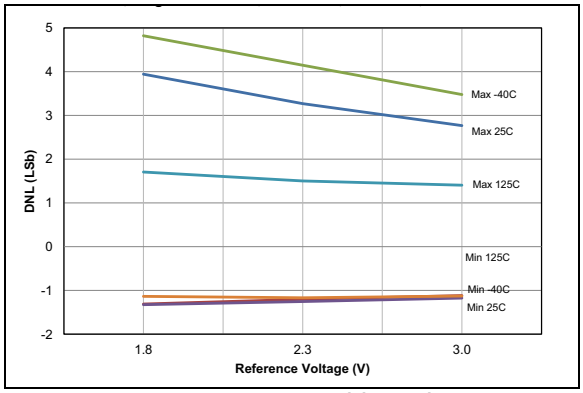

FIGURE 31-91: *ADC 12-bit Mode, Single-Ended DNL, V_{DD} = 3.0V, T_{AD} = 1 µS.*

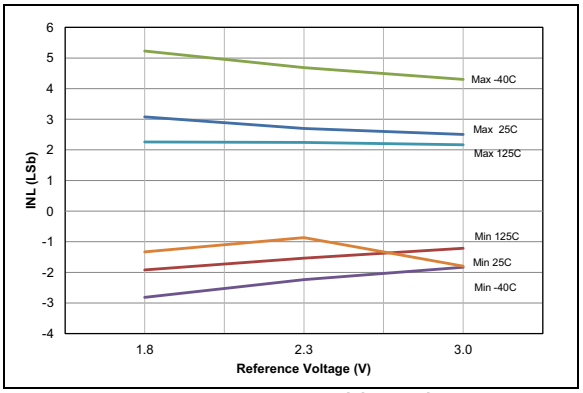

FIGURE 31-92: *ADC 12-bit Mode, Single-Ended INL, V_{DD} = 3.0V, T_{AD} = 1 µS.*

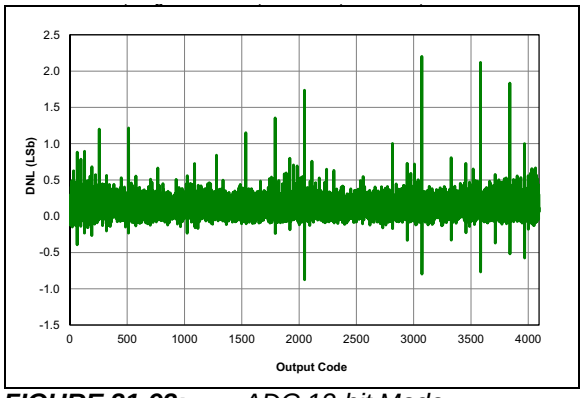

FIGURE 31-93: *ADC 12-bit Mode, Single-Ended DNL, V_{DD} = 5.5V, T_{AD} = 1 µS, 25°C.*

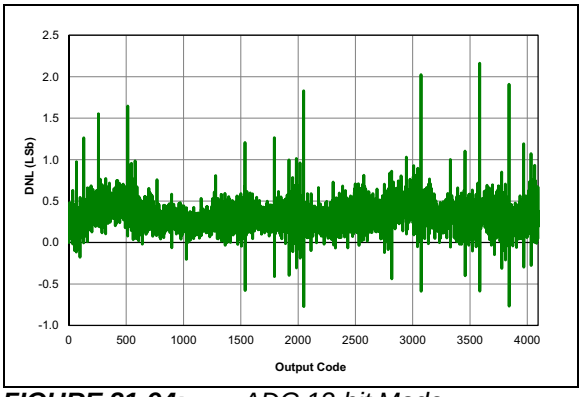

FIGURE 31-94: *ADC 12-bit Mode, Single-Ended DNL, V_{DD} = 5.5V, T_{AD} = 4 µS, 25°C.*

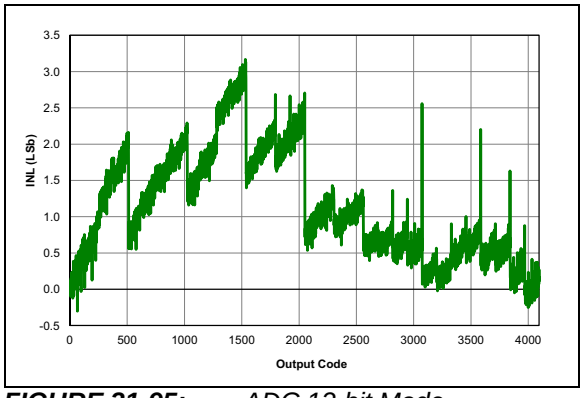

FIGURE 31-95: *ADC 12-bit Mode, Single-Ended INL, V_{DD} = 5.5V, T_{AD} = 1 µS, 25°C.*

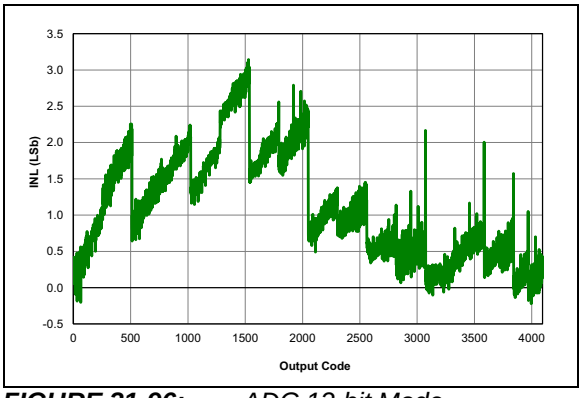

FIGURE 31-96: *ADC 12-bit Mode, Single-Ended INL, V_{DD} = 5.5V, T_{AD} = 4 µS, 25°C.*

Note: Unless otherwise noted, V_{IN} = 5V, F_{OSC} = 300 kHz, C_{IN} = 0.1 µF, T_A = 25°C.

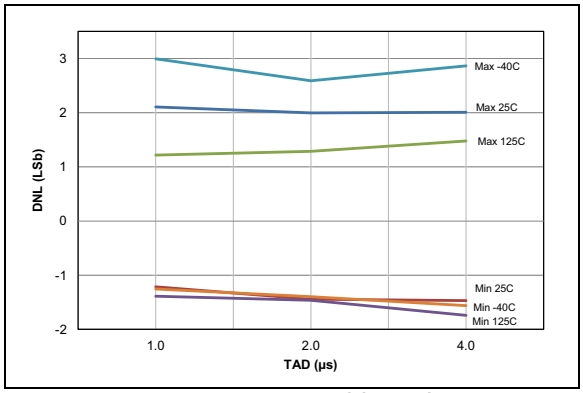

FIGURE 31-97: *ADC 12-bit Mode, Single-Ended DNL, V_{DD} = 5.5V, V_{REF} = 5.5V.*

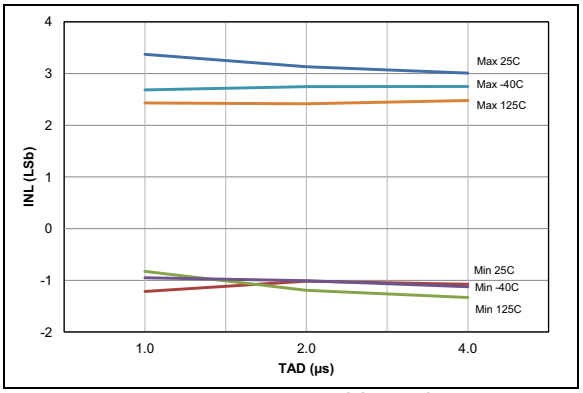

FIGURE 31-98: *ADC 12-bit Mode, Single-Ended INL, V_{DD} = 5.5V, V_{REF} = 5.5V.*

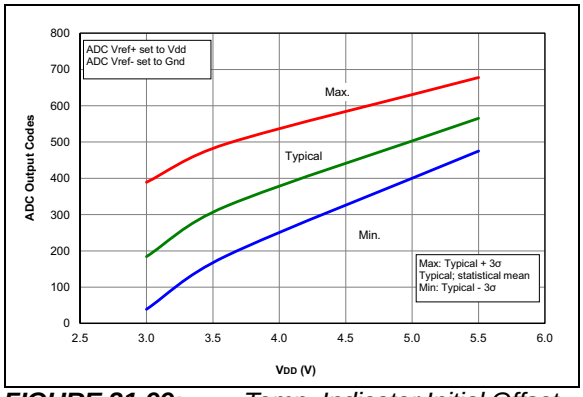

FIGURE 31-99: *Temp. Indicator Initial Offset, High Range, Temp. = 20°C, PIC16F1784/6/7 Only.*

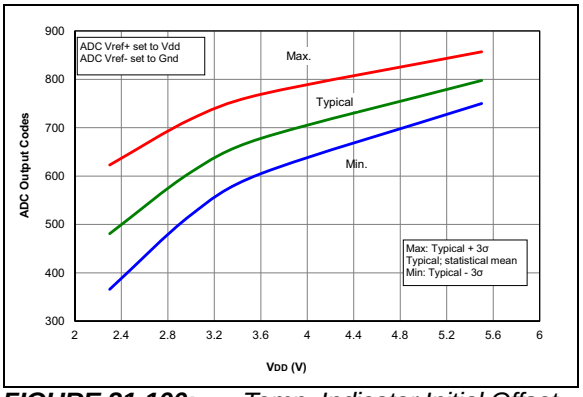

FIGURE 31-100: *Temp. Indicator Initial Offset, Low Range, Temp. = 20°C, PIC16F1784/6/7 Only.*

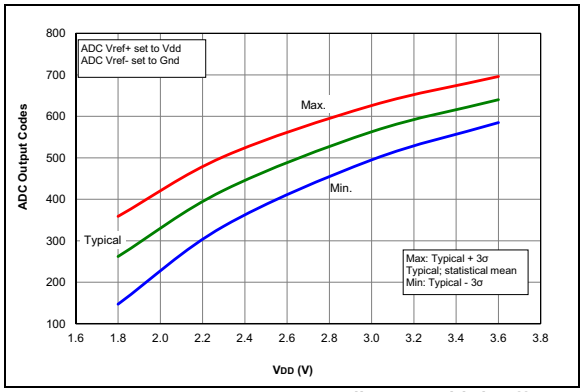

FIGURE 31-101: *Temp. Indicator Initial Offset, Low Range, Temp. = 20°C, PIC16LF1784/6/7 Only.*

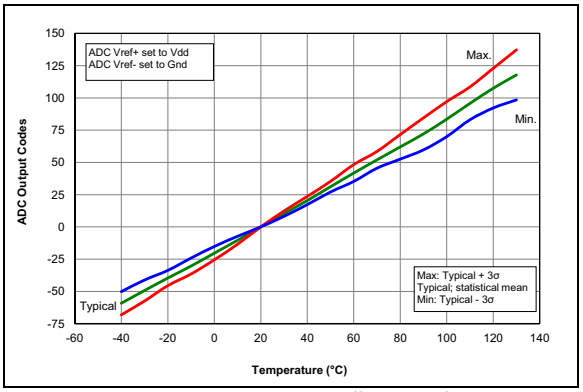

FIGURE 31-102: *Temp. Indicator Slope Normalized to 20°C, High Range, V_{DD} = 5.5V, PIC16F1784/6/7 Only.*

© 2012-2014 Microchip Technology Inc.

Note: Unless otherwise noted, V_{IN} = 5V, F_{OSC} = 300 kHz, C_{IN} = 0.1 µF, T_A = 25°C.

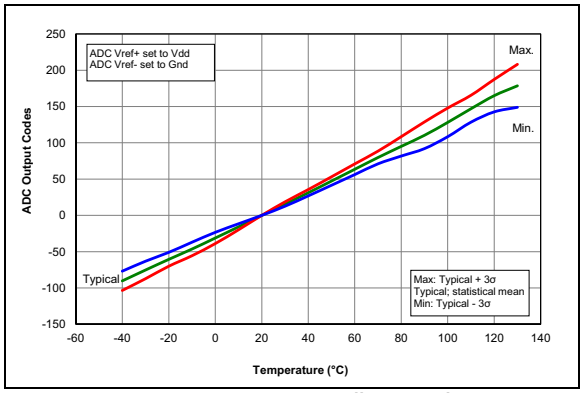

FIGURE 31-103: *Temp. Indicator Slope Normalized to 20°C, High Range, V_{DD} = 3.6V, PIC16F1784/6/7 Only.*

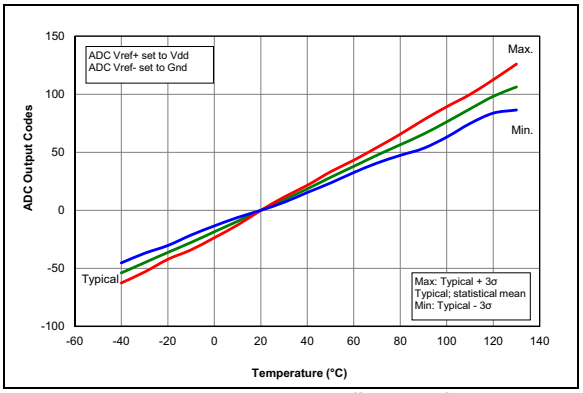

FIGURE 31-104: *Temp. Indicator Slope Normalized to 20°C, Low Range, V_{DD} = 3.0V, PIC16F1784/6/7 Only.*

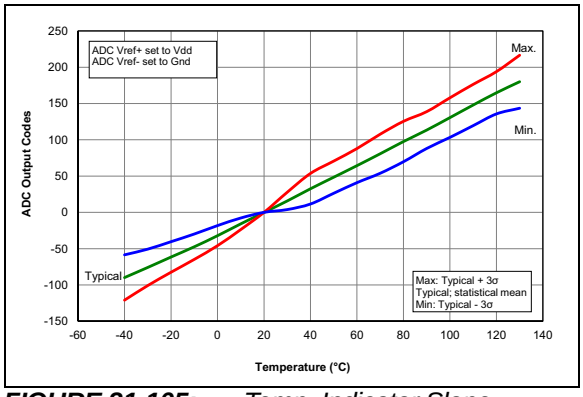

FIGURE 31-105: *Temp. Indicator Slope Normalized to 20°C, Low Range, V_{DD} = 1.8V, PIC16LF1784/6/7 Only.*

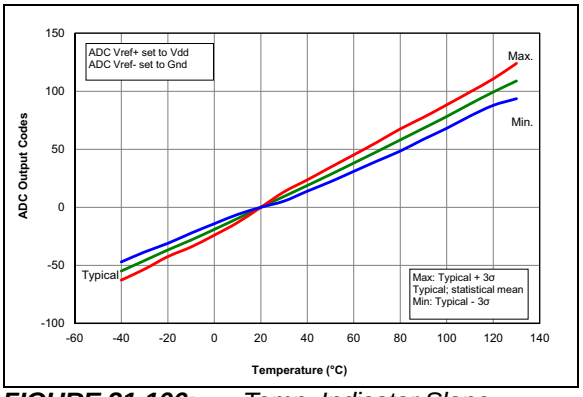

FIGURE 31-106: *Temp. Indicator Slope Normalized to 20°C, Low Range, V_{DD} = 3.0V, PIC16LF1784/6/7 Only.*

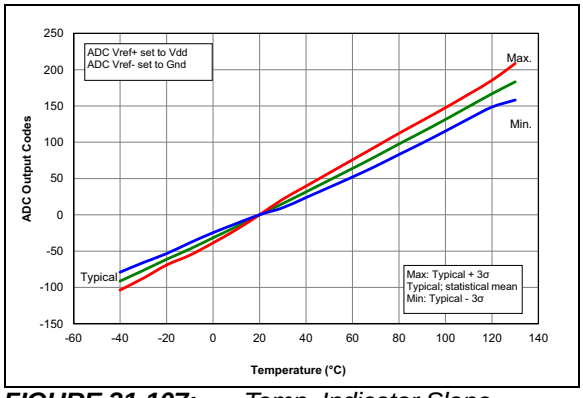

FIGURE 31-107: *Temp. Indicator Slope Normalized to 20°C, High Range, V_{DD} = 3.6V, PIC16LF1784/6/7 Only.*

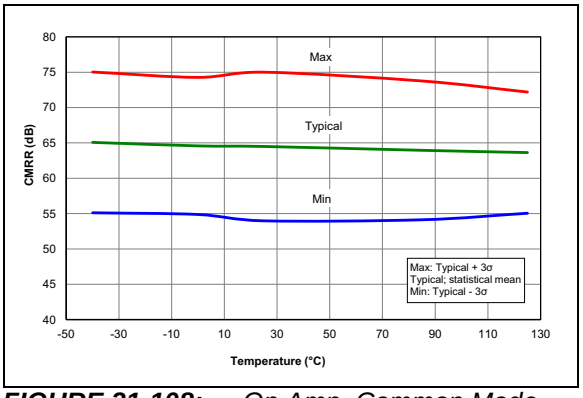

FIGURE 31-108: *Op Amp, Common Mode Rejection Ratio (CMRR), V_{DD} = 3.0V.*

Note: Unless otherwise noted, V_{IN} = 5V, F_{OSC} = 300 kHz, C_{IN} = 0.1 µF, T_A = 25°C.

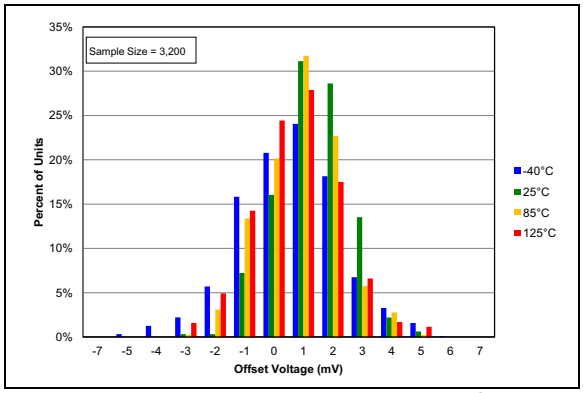

FIGURE 31-109: *Op Amp, Output Voltage Histogram, V_{DD} = 3.0V, V_{CM} = V_{DD}/2.*

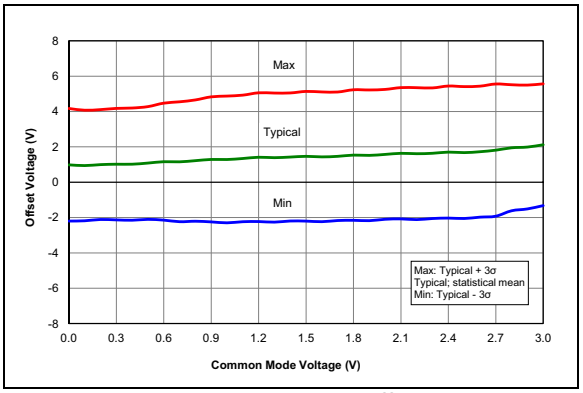

FIGURE 31-110: *Op Amp, Offset Over Common Mode Voltage, V_{DD} = 3.0V, Temp. = 25°C.*

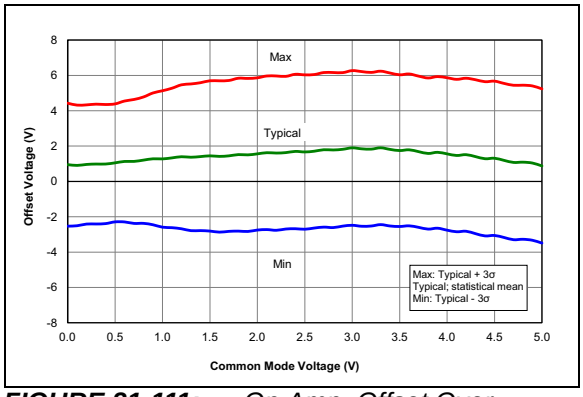

FIGURE 31-111: *Op Amp, Offset Over Common Mode Voltage, V_{DD} = 5.0V, Temp. = 25°C, PIC16F1784/6/7 Only.*

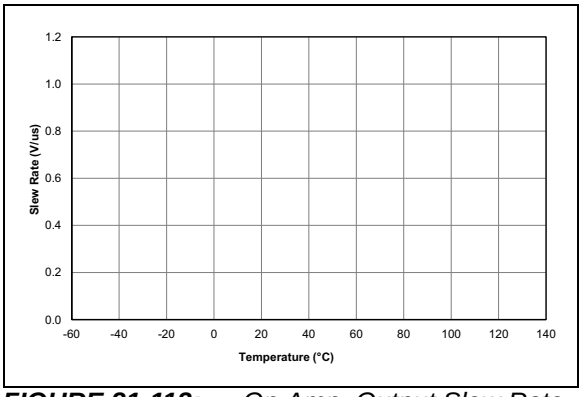

FIGURE 31-112: *Op Amp, Output Slew Rate, Rising Edge, PIC16LF1784/6/7 Only.*

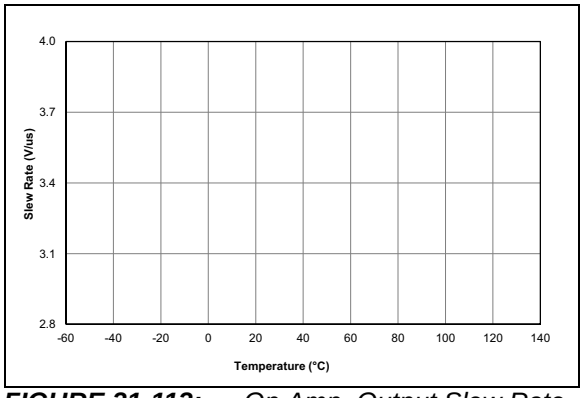

FIGURE 31-113: *Op Amp, Output Slew Rate, Falling Edge, PIC16LF1784/6/7 Only.*

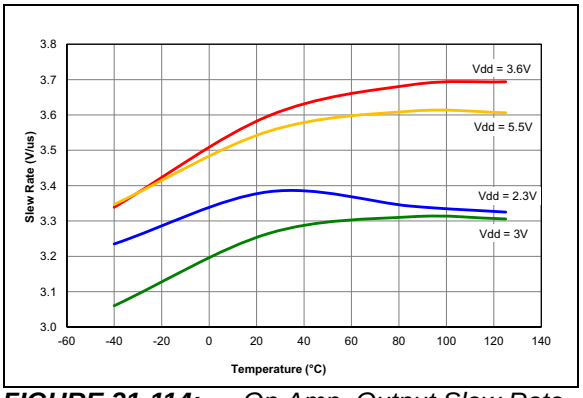

FIGURE 31-114: *Op Amp, Output Slew Rate, Rising Edge, PIC16F1784/6/7 Only.*

© 2012-2014 Microchip Technology Inc.

Note: Unless otherwise noted, V_{IN} = 5V, F_{OSC} = 300 kHz, C_{IN} = 0.1 µF, T_A = 25°C.

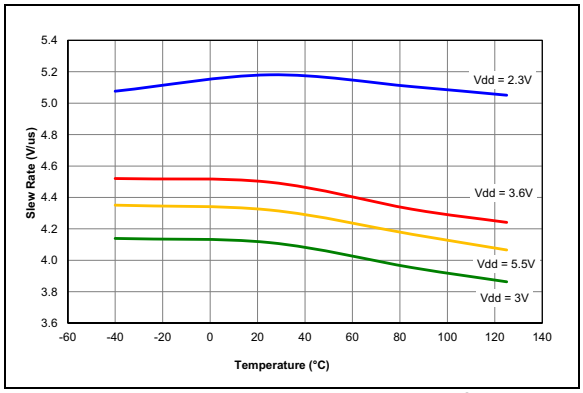

FIGURE 31-115: *Op Amp, Output Slew Rate, Falling Edge, PIC16F1784/6/7 Only.*

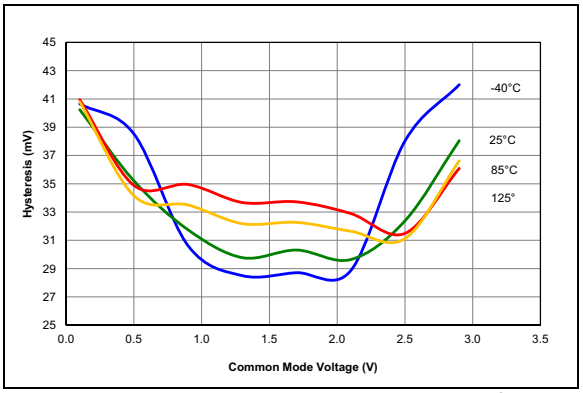

FIGURE 31-116: *Comparator Hysteresis, NP Mode (CxSP = 1), V_{DD} = 3.0V, Typical Measured Values.*

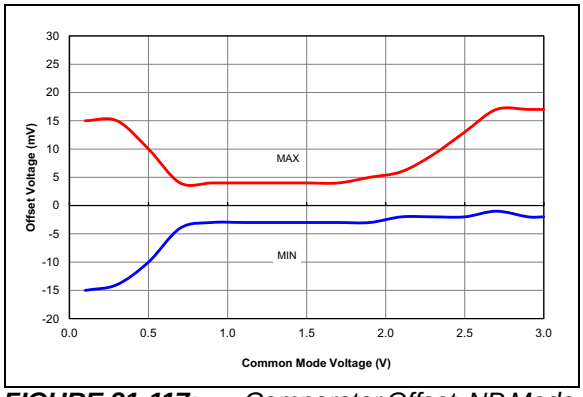

FIGURE 31-117: *Comparator Offset, NP Mode (CxSP = 1), V_{DD} = 3.0V, Typical Measured Values at 25°C.*

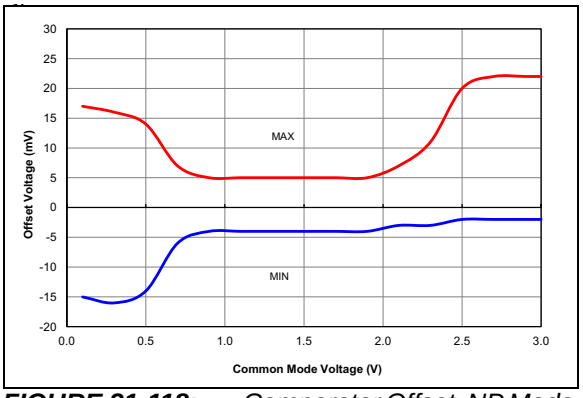

FIGURE 31-118: *Comparator Offset, NP Mode (CxSP = 1), V_{DD} = 3.0V, Typical Measured Values From -40°C to 125°C.*

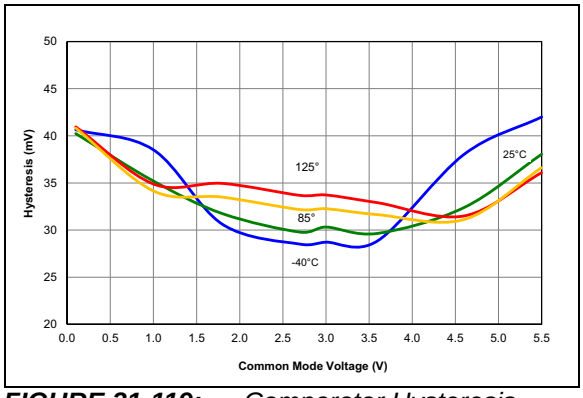

FIGURE 31-119: *Comparator Hysteresis, NP Mode (CxSP = 1), V_{DD} = 5.5V, Typical Measured Values, PIC16F1784/6/7 Only.*

Note: Unless otherwise noted, V_{IN} = 5V, F_{OSC} = 300 kHz, C_{IN} = 0.1 µF, T_A = 25°C.

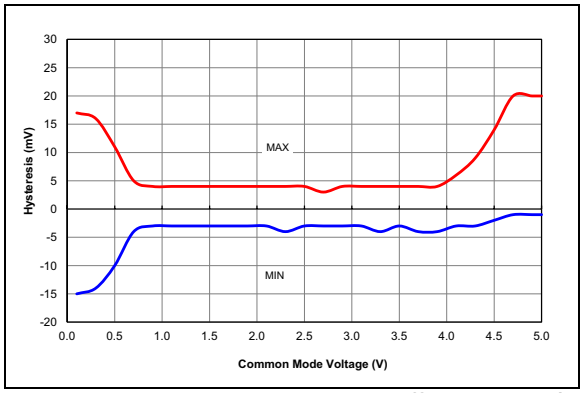

FIGURE 31-120: *Comparator Offset, NP Mode (CxSP = 1), V_{DD} = 5.0V, Typical Measured Values at 25°C, PIC16F1784/6/7 Only.*

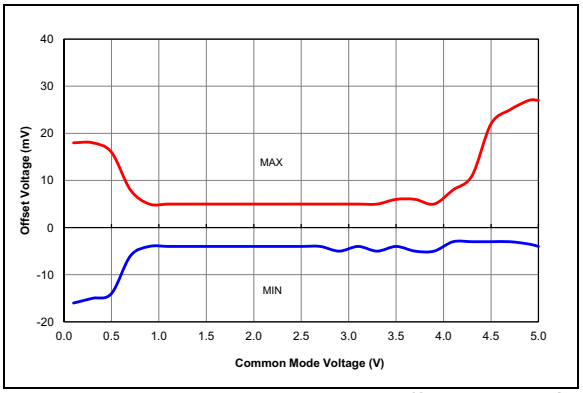

FIGURE 31-121: *Comparator Offset, NP Mode (CxSP = 1), V_{DD} = 5.0V, Typical Measured Values From -40°C to 125°C, PIC16F1784/6/7 Only.*

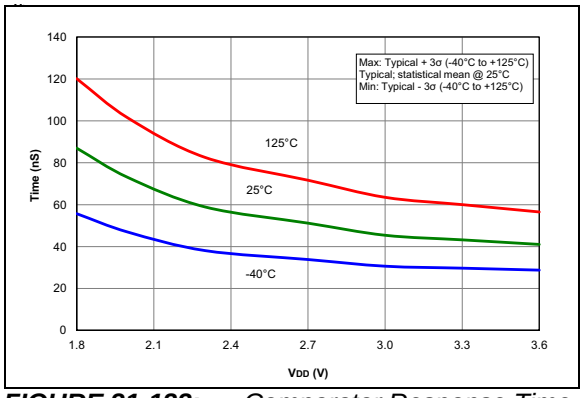

FIGURE 31-122: *Comparator Response Time Over Voltage, NP Mode (CxSP = 1), Typical Measured Values, PIC16LF1784/6/7 Only.*

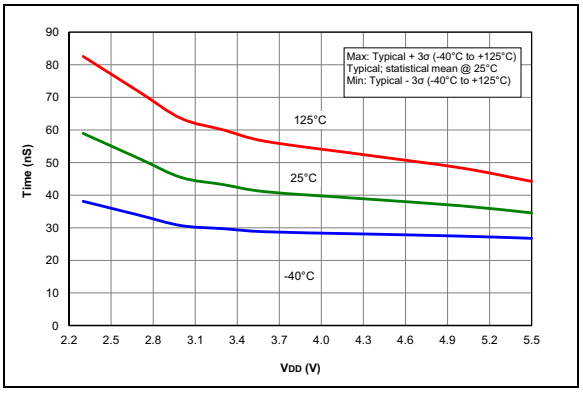

FIGURE 31-123: *Comparator Response Time Over Voltage, NP Mode (CxSP = 1), Typical Measured Values, PIC16F1784/6/7 Only.*

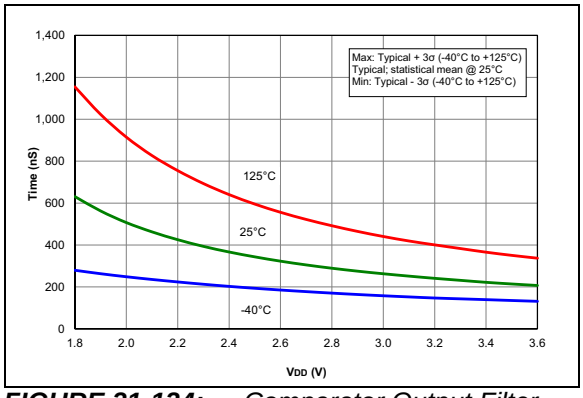

FIGURE 31-124: *Comparator Output Filter Delay Time Over Temp., NP Mode (CxSP = 1), Typical Measured Values, PIC16LF1784/6/7 Only.*

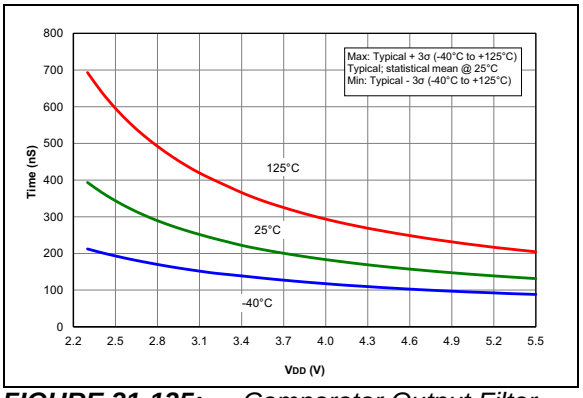

FIGURE 31-125: *Comparator Output Filter Delay Time Over Temp., NP Mode (CxSP = 1), Typical Measured Values, PIC16F1784/6/7 Only.*

© 2012-2014 Microchip Technology Inc.

Note: Unless otherwise noted, V_{IN} = 5V, F_{OSC} = 300 kHz, C_{IN} = 0.1 µF, T_A = 25°C.

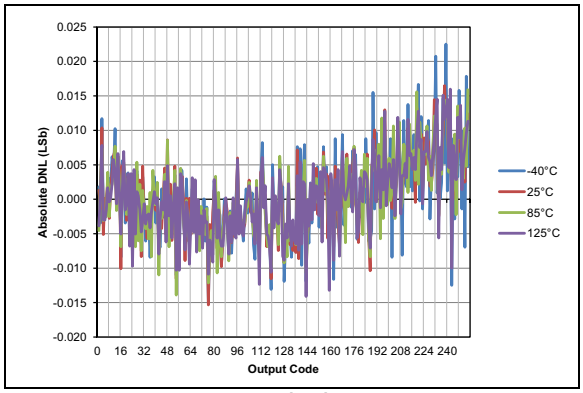

FIGURE 31-126: *Typical DAC DNL Error, V_{DD} = 3.0V, V_{REF} = External 3V.*

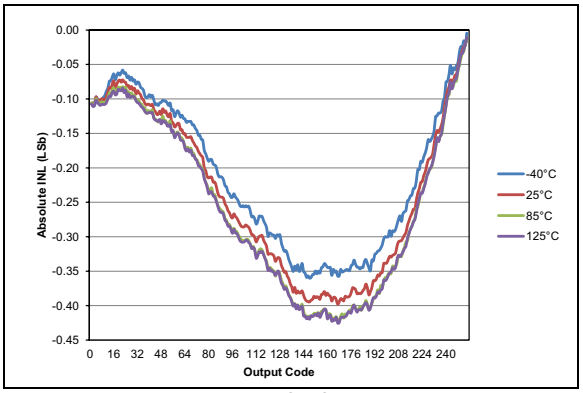

FIGURE 31-127: *Typical DAC INL Error, V_{DD} = 3.0V, V_{REF} = External 3V.*

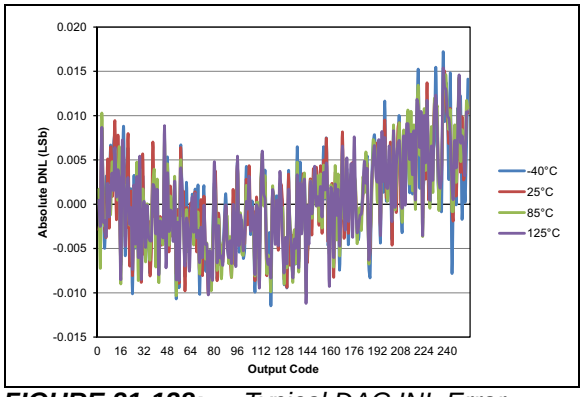

FIGURE 31-128: *Typical DAC INL Error, V_{DD} = 5.0V, V_{REF} = External 5V, PIC16F1784/6/7 Only.*

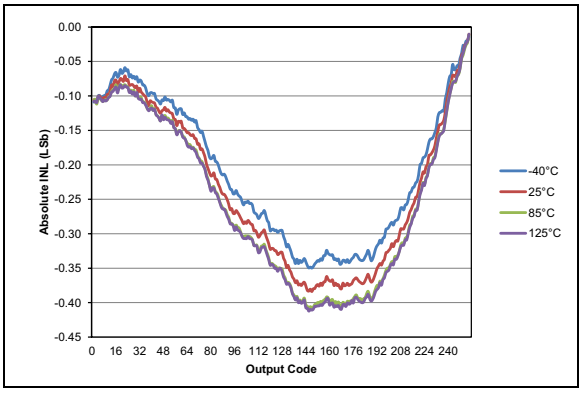

FIGURE 31-129: *Typical DAC INL Error, V_{DD} = 5.0V, V_{REF} = External 5V, PIC16F1784/6/7 Only.*

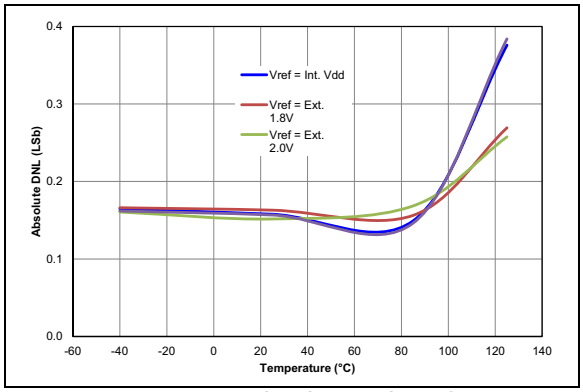

FIGURE 31-130: *Absolute Value of DAC DNL Error, V_{DD} = 3.0V, V_{REF} = V_{DD}.*

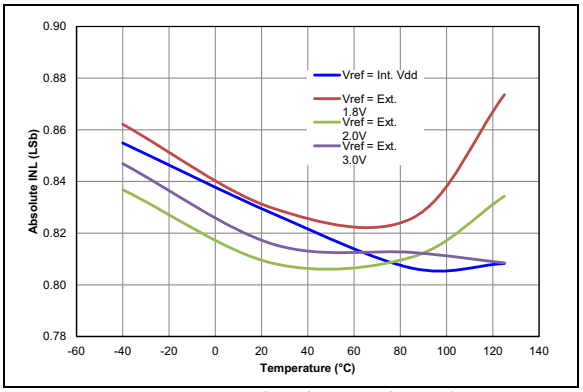

FIGURE 31-131: *Absolute Value of DAC INL Error, V_{DD} = 3.0V.*

Note: Unless otherwise noted, V_{IN} = 5V, F_{OSC} = 300 kHz, C_{IN} = 0.1 µF, T_A = 25°C.

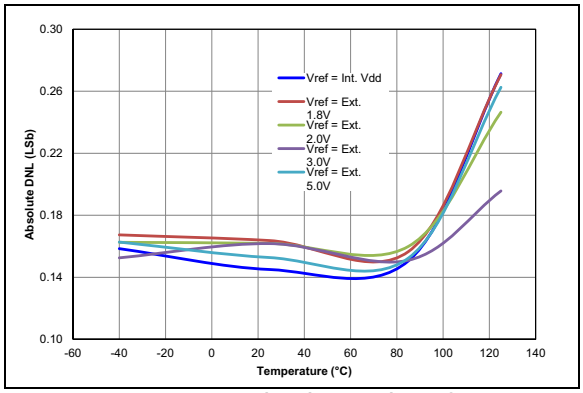

FIGURE 31-132: *Absolute Value of DAC DNL Error, V_{DD} = 5.0V, PIC16F1784/6/7 Only.*

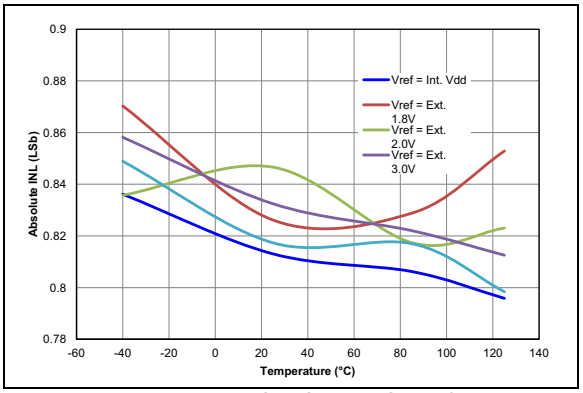

FIGURE 31-133: *Absolute Value of DAC INL Error, V_{DD} = 5.0V, PIC16F1784/6/7 Only.*

© 2012-2014 Microchip Technology Inc.

32.0 DEVELOPMENT SUPPORT

The PIC® microcontrollers (MCU) and dsPIC® digital signal controllers (DSC) are supported with a full range of software and hardware development tools:

- Integrated Development Environment
  - MPLAB® X IDE Software
- Compilers/Assemblers/Linkers
  - MPLAB XC Compiler
  - MPASM™ Assembler
  - MPLINK™ Object Linker/ MPLIB™ Object Librarian
  - MPLAB Assembler/Linker/Librarian for Various Device Families
- Simulators
  - MPLAB X SIM Software Simulator
- Emulators
  - MPLAB REAL ICE™ In-Circuit Emulator
- In-Circuit Debuggers/Programmers
  - MPLAB ICD 3
  - PICkit™ 3
- Device Programmers
  - MPLAB PM3 Device Programmer
- Low-Cost Demonstration/Development Boards, Evaluation Kits and Starter Kits
- Third-party development tools

32.1 MPLAB X Integrated Development Environment Software

The MPLAB X IDE is a single, unified graphical user interface for Microchip and third-party software, and hardware development tool that runs on Windows®, Linux and Mac OS® X. Based on the NetBeans IDE, MPLAB X IDE is an entirely new IDE with a host of free software components and plug-ins for high-performance application development and debugging. Moving between tools and upgrading from software simulators to hardware debugging and programming tools is simple with the seamless user interface.

With complete project management, visual call graphs, a configurable watch window and a feature-rich editor that includes code completion and context menus, MPLAB X IDE is flexible and friendly enough for new users. With the ability to support multiple tools on multiple projects with simultaneous debugging, MPLAB X IDE is also suitable for the needs of experienced users.

Feature-Rich Editor:

- Color syntax highlighting
- Smart code completion makes suggestions and provides hints as you type
- Automatic code formatting based on user-defined rules
- Live parsing

User-Friendly, Customizable Interface:

- Fully customizable interface: toolbars, toolbar buttons, windows, window placement, etc.
- Call graph window

Project-Based Workspaces:

- Multiple projects
- Multiple tools
- Multiple configurations
- Simultaneous debugging sessions

File History and Bug Tracking:

- Local file history feature
- Built-in support for Bugzilla issue tracker

© 2012-2014 Microchip Technology Inc.

32.2 MPLAB XC Compilers

The MPLAB XC Compilers are complete ANSI C compilers for all of Microchip's 8, 16, and 32-bit MCU and DSC devices. These compilers provide powerful integration capabilities, superior code optimization and ease of use. MPLAB XC Compilers run on Windows, Linux or MAC OS X.

For easy source level debugging, the compilers provide debug information that is optimized to the MPLAB X IDE.

The free MPLAB XC Compiler editions support all devices and commands, with no time or memory restrictions, and offer sufficient code optimization for most applications.

MPLAB XC Compilers include an assembler, linker and utilities. The assembler generates relocatable object files that can then be archived or linked with other relocatable object files and archives to create an executable file. MPLAB XC Compiler uses the assembler to produce its object file. Notable features of the assembler include:

- Support for the entire device instruction set
- Support for fixed-point and floating-point data
- Command-line interface
- Rich directive set
- Flexible macro language
- MPLAB X IDE compatibility

32.3 MPASM Assembler

The MPASM Assembler is a full-featured, universal macro assembler for PIC10/12/16/18 MCUs.

The MPASM Assembler generates relocatable object files for the MPLINK Object Linker, Intel® standard HEX files, MAP files to detail memory usage and symbol reference, absolute LST files that contain source lines and generated machine code, and COFF files for debugging.

The MPASM Assembler features include:

- Integration into MPLAB X IDE projects
- User-defined macros to streamline assembly code
- Conditional assembly for multipurpose source files
- Directives that allow complete control over the assembly process

32.4 MPLINK Object Linker/ MPLIB Object Librarian

The MPLINK Object Linker combines relocatable objects created by the MPASM Assembler. It can link relocatable objects from precompiled libraries, using directives from a linker script.

The MPLIB Object Librarian manages the creation and modification of library files of precompiled code. When a routine from a library is called from a source file, only the modules that contain that routine will be linked in with the application. This allows large libraries to be used efficiently in many different applications.

The object linker/library features include:

- Efficient linking of single libraries instead of many smaller files
- Enhanced code maintainability by grouping related modules together
- Flexible creation of libraries with easy module listing, replacement, deletion and extraction

32.5 MPLAB Assembler, Linker and Librarian for Various Device Families

MPLAB Assembler produces relocatable machine code from symbolic assembly language for PIC24, PIC32 and dsPIC DSC devices. MPLAB XC Compiler uses the assembler to produce its object file. The assembler generates relocatable object files that can then be archived or linked with other relocatable object files and archives to create an executable file. Notable features of the assembler include:

- Support for the entire device instruction set
- Support for fixed-point and floating-point data
- Command-line interface
- Rich directive set
- Flexible macro language
- MPLAB X IDE compatibility

32.6 MPLAB X SIM Software Simulator

The MPLAB X SIM Software Simulator allows code development in a PC-hosted environment by simulating the PIC MCUs and dsPIC DSCs on an instruction level. On any given instruction, the data areas can be examined or modified and stimuli can be applied from a comprehensive stimulus controller. Registers can be logged to files for further run-time analysis. The trace buffer and logic analyzer display extend the power of the simulator to record and track program execution, actions on I/O, most peripherals and internal registers.

The MPLAB X SIM Software Simulator fully supports symbolic debugging using the MPLAB XC Compilers, and the MPASM and MPLAB Assemblers. The software simulator offers the flexibility to develop and debug code outside of the hardware laboratory environment, making it an excellent, economical software development tool.

32.7 MPLAB REAL ICE In-Circuit Emulator System

The MPLAB REAL ICE In-Circuit Emulator System is Microchip's next generation high-speed emulator for Microchip Flash DSC and MCU devices. It debugs and programs all 8, 16 and 32-bit MCU, and DSC devices with the easy-to-use, powerful graphical user interface of the MPLAB X IDE.

The emulator is connected to the design engineer's PC using a high-speed USB 2.0 interface and is connected to the target with either a connector compatible with in-circuit debugger systems (RJ-11) or with the new high-speed, noise tolerant, Low-Voltage Differential Signal (LVDS) interconnection (CAT5).

The emulator is field upgradable through future firmware downloads in MPLAB X IDE. MPLAB REAL ICE offers significant advantages over competitive emulators including full-speed emulation, run-time variable watches, trace analysis, complex breakpoints, logic probes, a ruggedized probe interface and long (up to three meters) interconnection cables.

32.8 MPLAB ICD 3 In-Circuit Debugger System

The MPLAB ICD 3 In-Circuit Debugger System is Microchip's most cost-effective, high-speed hardware debugger/programmer for Microchip Flash DSC and MCU devices. It debugs and programs PIC Flash microcontrollers and dsPIC DSCs with the powerful, yet easy-to-use graphical user interface of the MPLAB IDE.

The MPLAB ICD 3 In-Circuit Debugger probe is connected to the design engineer's PC using a high-speed USB 2.0 interface and is connected to the target with a connector compatible with the MPLAB ICD 2 or MPLAB REAL ICE systems (RJ-11). MPLAB ICD 3 supports all MPLAB ICD 2 headers.

32.9 PICkit 3 In-Circuit Debugger/ Programmer

The MPLAB PICkit 3 allows debugging and programming of PIC and dsPIC Flash microcontrollers at a most affordable price point using the powerful graphical user interface of the MPLAB IDE. The MPLAB PICkit 3 is connected to the design engineer's PC using a full-speed USB interface and can be connected to the target via a Microchip debug (RJ-11) connector (compatible with MPLAB ICD 3 and MPLAB REAL ICE). The connector uses two device I/O pins and the Reset line to implement in-circuit debugging and In-Circuit Serial Programming™ (ICSP™).

32.10 MPLAB PM3 Device Programmer

The MPLAB PM3 Device Programmer is a universal, CE compliant device programmer with programmable voltage verification at V_{DDMIN} and V_{DDMAX} for maximum reliability. It features a large LCD display (128 x 64) for menus and error messages, and a modular, detachable socket assembly to support various package types. The ICSP cable assembly is included as a standard item. In Stand-Alone mode, the MPLAB PM3 Device Programmer can read, verify and program PIC devices without a PC connection. It can also set code protection in this mode. The MPLAB PM3 connects to the host PC via an RS-232 or USB cable. The MPLAB PM3 has high-speed communications and optimized algorithms for quick programming of large memory devices, and incorporates an MMC card for file storage and data applications.

© 2012-2014 Microchip Technology Inc.

32.11 Demonstration/Development Boards, Evaluation Kits, and Starter Kits

A wide variety of demonstration, development and evaluation boards for various PIC MCUs and dsPIC DSCs allows quick application development on fully functional systems. Most boards include prototyping areas for adding custom circuitry and provide application firmware and source code for examination and modification.

The boards support a variety of features, including LEDs, temperature sensors, switches, speakers, RS-232 interfaces, LCD displays, potentiometers and additional EEPROM memory.

The demonstration and development boards can be used in teaching environments, for prototyping custom circuits and for learning about various microcontroller applications.

In addition to the PICDEM™ and dsPICDEM™ demonstration/development board series of circuits, Microchip has a line of evaluation kits and demonstration software for analog filter design, KEELOQ® security ICs, CAN, IrDA®, PowerSmart battery management, SEEVAL® evaluation system, Sigma-Delta ADC, flow rate sensing, plus many more.

Also available are starter kits that contain everything needed to experience the specified device. This usually includes a single application and debug capability, all on one board.

Check the Microchip web page (www.microchip.com) for the complete list of demonstration, development and evaluation kits.

32.12 Third-Party Development Tools

Microchip also offers a great collection of tools from third-party vendors. These tools are carefully selected to offer good value and unique functionality.

- Device Programmers and Gang Programmers from companies, such as SoftLog and CCS
- Software Tools from companies, such as Gimpel and Trace Systems
- Protocol Analyzers from companies, such as Saleae and Total Phase
- Demonstration Boards from companies, such as MikroElektronika, Digilent® and Olimex
- Embedded Ethernet Solutions from companies, such as EZ Web Lynx, WIZnet and IPLogika®

33.0 PACKAGING INFORMATION

33.1 Package Marking Information

28-Lead SPDIP (.300”)

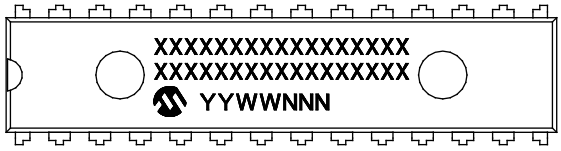

Example

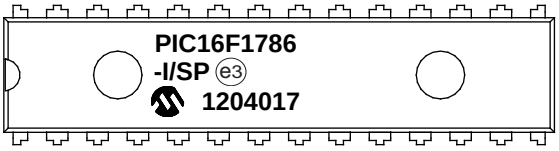

28-Lead SOIC (7.50 mm)

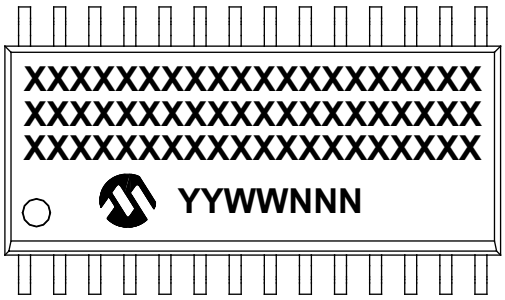

Example

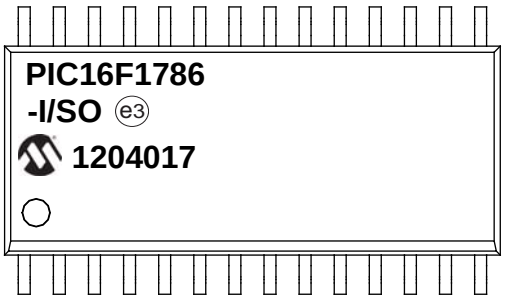

28-Lead SSOP (5.30 mm)

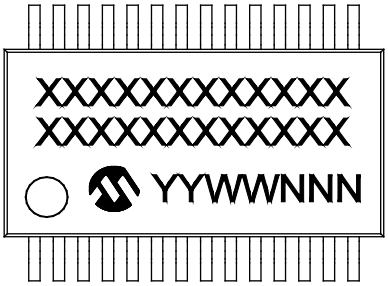

Example

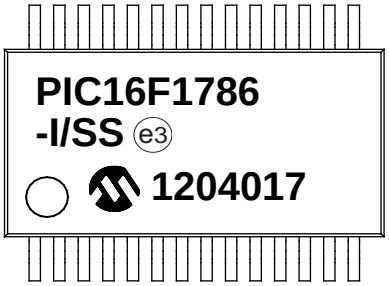

Legend:	XX...X	Customer-specific information
	Y	Year code (last digit of calendar year)
	YY	Year code (last 2 digits of calendar year)
	WW	Week code (week of January 1 is week ‘01’)
	NNN	Alphanumeric traceability code
	e3	Pb-free JEDEC® designator for Matte Tin (Sn)
	*	This package is Pb-free. The Pb-free JEDEC designator (e3) can be found on the outer packaging for this package.
Note:	In the event the full Microchip part number cannot be marked on one line, it will be carried over to the next line, thus limiting the number of available characters for customer-specific information.	

© 2012-2014 Microchip Technology Inc.

Package Marking Information (Continued)

28-Lead QFN (6x6 mm)

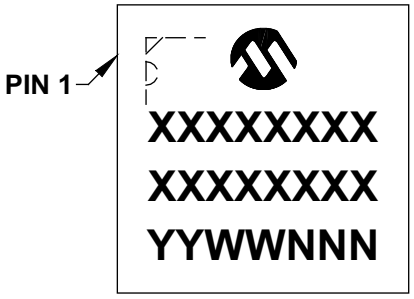

Example

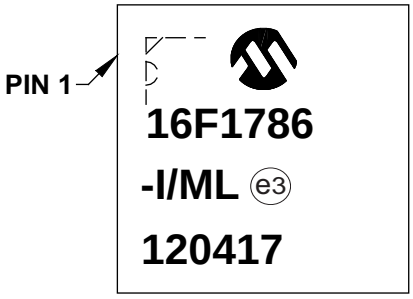

40-Lead PDIP (600 mil)

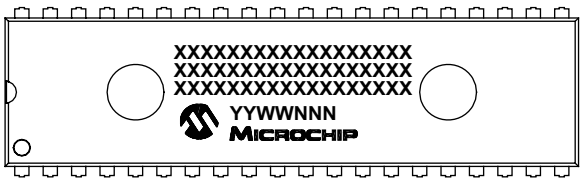

Example

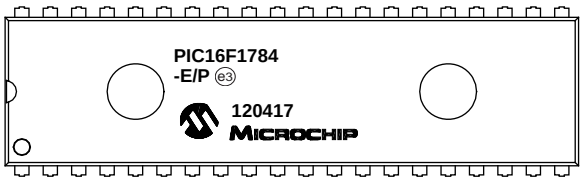

40-Lead UQFN (5x5x0.5 mm)

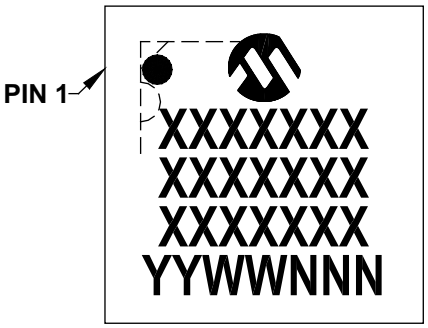

Example

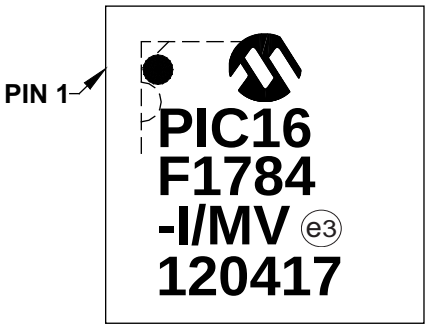

Package Marking Information (Continued)

44-Lead QFN (8x8x0.9 mm)

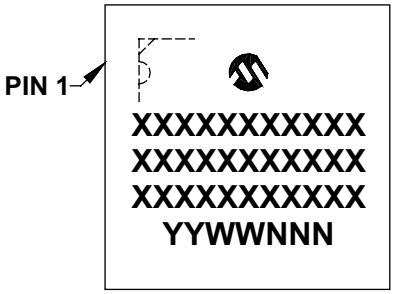

Example

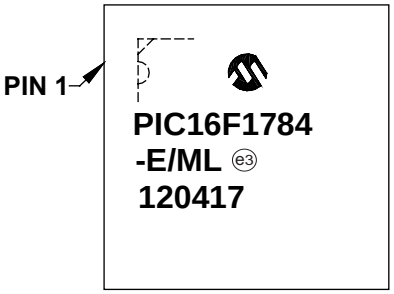

44-Lead TQFP (10x10x1 mm)

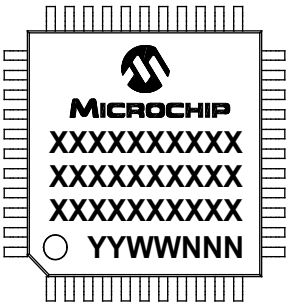

Example

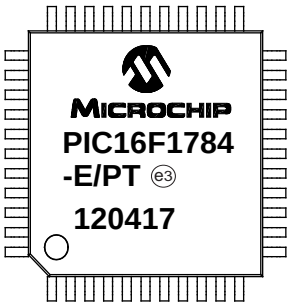

© 2012-2014 Microchip Technology Inc.

33.2 Package Details

The following sections give the technical details of the packages.

28-Lead Skinny Plastic Dual In-Line (SP) – 300 mil Body [SPDIP]

Note: For the most current package drawings, please see the Microchip Packaging Specification located at http://www.microchip.com/packaging

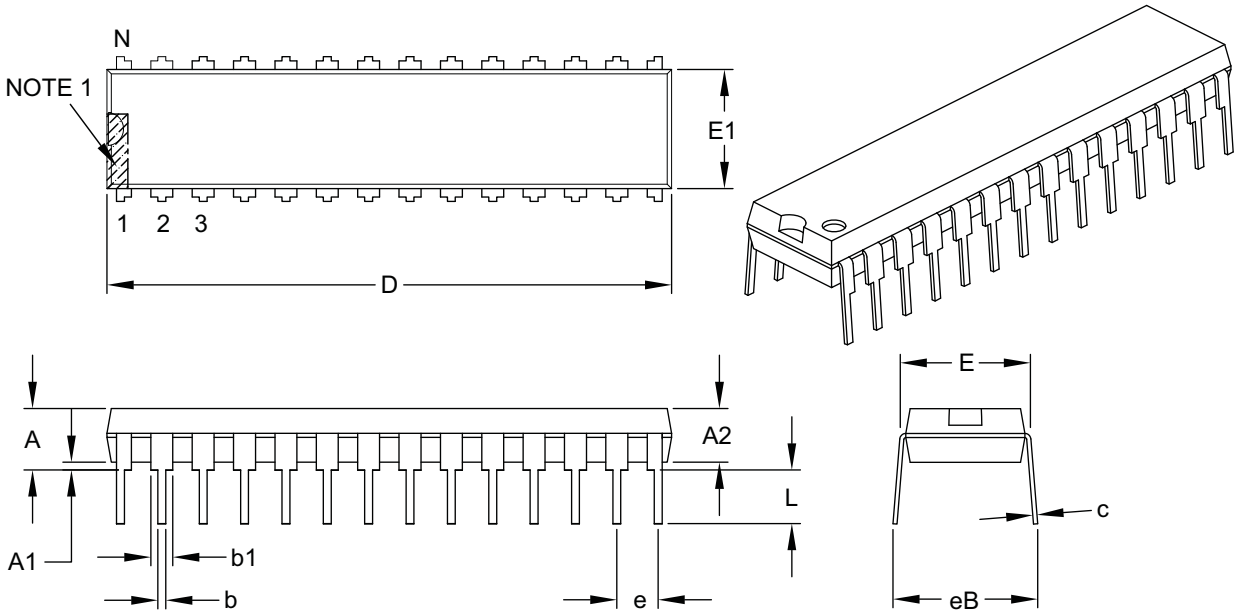

Units		INCHES		
Dimension Limits		MIN	NOM	MAX
Number of Pins	N	28		
Pitch	e	.100 BSC		
Top to Seating Plane	A	–	–	.200
Molded Package Thickness	A2	.120	.135	.150
Base to Seating Plane	A1	.015	–	–
Shoulder to Shoulder Width	E	.290	.310	.335
Molded Package Width	E1	.240	.285	.295
Overall Length	D	1.345	1.365	1.400
Tip to Seating Plane	L	.110	.130	.150
Lead Thickness	c	.008	.010	.015
Upper Lead Width	b1	.040	.050	.070
Lower Lead Width	b	.014	.018	.022
Overall Row Spacing §	eB	–	–	.430

Notes:

1. Pin 1 visual index feature may vary, but must be located within the hatched area.
2. § Significant Characteristic.
3. Dimensions D and E1 do not include mold flash or protrusions. Mold flash or protrusions shall not exceed .010" per side.
4. Dimensioning and tolerancing per ASME Y14.5M.
   BSC: Basic Dimension. Theoretically exact value shown without tolerances.

Microchip Technology Drawing C04-070B

28-Lead Plastic Small Outline (SO) - Wide, 7.50 mm Body [SOIC]

Note:	For the most current package drawings, please see the Microchip Packaging Specification located at http://www.microchip.com/packaging

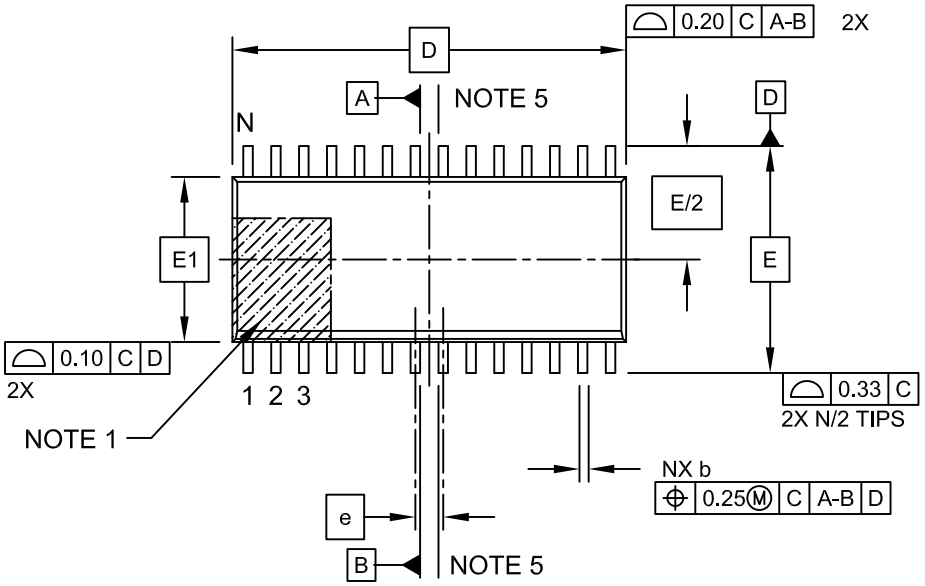

TOP VIEW

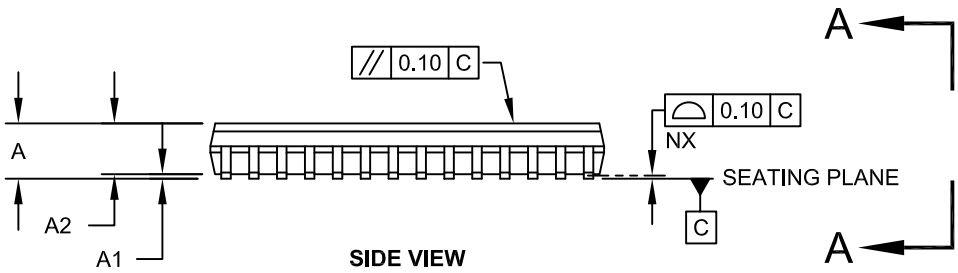

SIDE VIEW

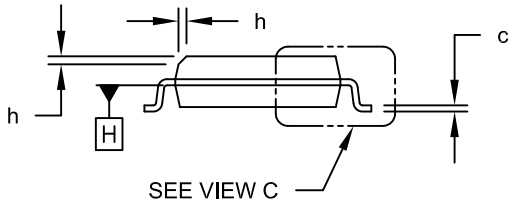

VIEW A-A

Microchip Technology Drawing C04-052C Sheet 1 of 2

© 2012-2014 Microchip Technology Inc.

28-Lead Plastic Small Outline (SO) - Wide, 7.50 mm Body [SOIC]

Note: For the most current package drawings, please see the Microchip Packaging Specification located at http://www.microchip.com/packaging

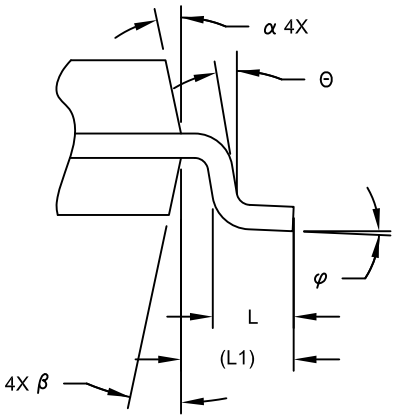

VIEW C

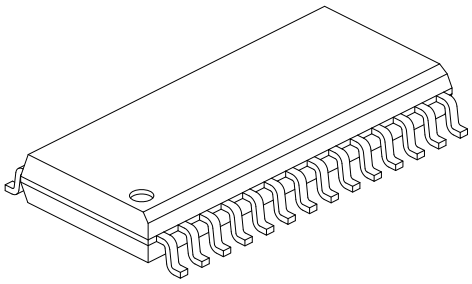

Units		MILLIMETERS		
Dimension Limits		MIN	NOM	MAX
Number of Pins	N	28		
Pitch	e	1.27 BSC		
Overall Height	A	-	-	2.65
Molded Package Thickness	A2	2.05	-	-
Standoff §	A1	0.10	-	0.30
Overall Width	E	10.30 BSC		
Molded Package Width	E1	7.50 BSC		
Overall Length	D	17.90 BSC		
Chamfer (Optional)	h	0.25	-	0.75
Foot Length	L	0.40	-	1.27
Footprint	L1	1.40 REF		
Lead Angle	Θ	0°	-	-
Foot Angle	φ	0°	-	8°
Lead Thickness	c	0.18	-	0.33
Lead Width	b	0.31	-	0.51
Mold Draft Angle Top	α	5°	-	15°
Mold Draft Angle Bottom	β	5°	-	15°

Notes:

1. Pin 1 visual index feature may vary, but must be located within the hatched area.
2. § Significant Characteristic
3. Dimension D does not include mold flash, protrusions or gate burrs, which shall not exceed 0.15 mm per end. Dimension E1 does not include interlead flash or protrusion, which shall not exceed 0.25 mm per side.
4. Dimensioning and tolerancing per ASME Y14.5M
   BSC: Basic Dimension. Theoretically exact value shown without tolerances.
   REF: Reference Dimension, usually without tolerance, for information purposes only.
5. Datums A & B to be determined at Datum H.

Microchip Technology Drawing C04-052C Sheet 2 of 2

28-Lead Plastic Small Outline (SO) - Wide, 7.50 mm Body [SOIC]

Note: For the most current package drawings, please see the Microchip Packaging Specification located at http://www.microchip.com/packaging

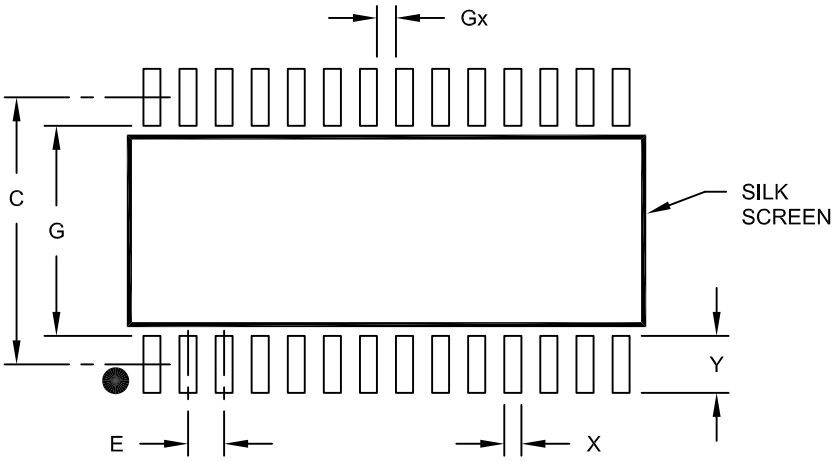

RECOMMENDED LAND PATTERN

Units		MILLIMETERS		
Dimension Limits		MIN	NOM	MAX
Contact Pitch	E	1.27 BSC		
Contact Pad Spacing	C		9.40	
Contact Pad Width (X28)	X			0.60
Contact Pad Length (X28)	Y			2.00
Distance Between Pads	Gx	0.67		
Distance Between Pads	G	7.40		

Notes:

1. Dimensioning and tolerancing per ASME Y14.5M
   BSC: Basic Dimension. Theoretically exact value shown without tolerances.

Microchip Technology Drawing No. C04-2052A

© 2012-2014 Microchip Technology Inc.

28-Lead Plastic Shrink Small Outline (SS) – 5.30 mm Body [SSOP]

Note: For the most current package drawings, please see the Microchip Packaging Specification located at http://www.microchip.com/packaging

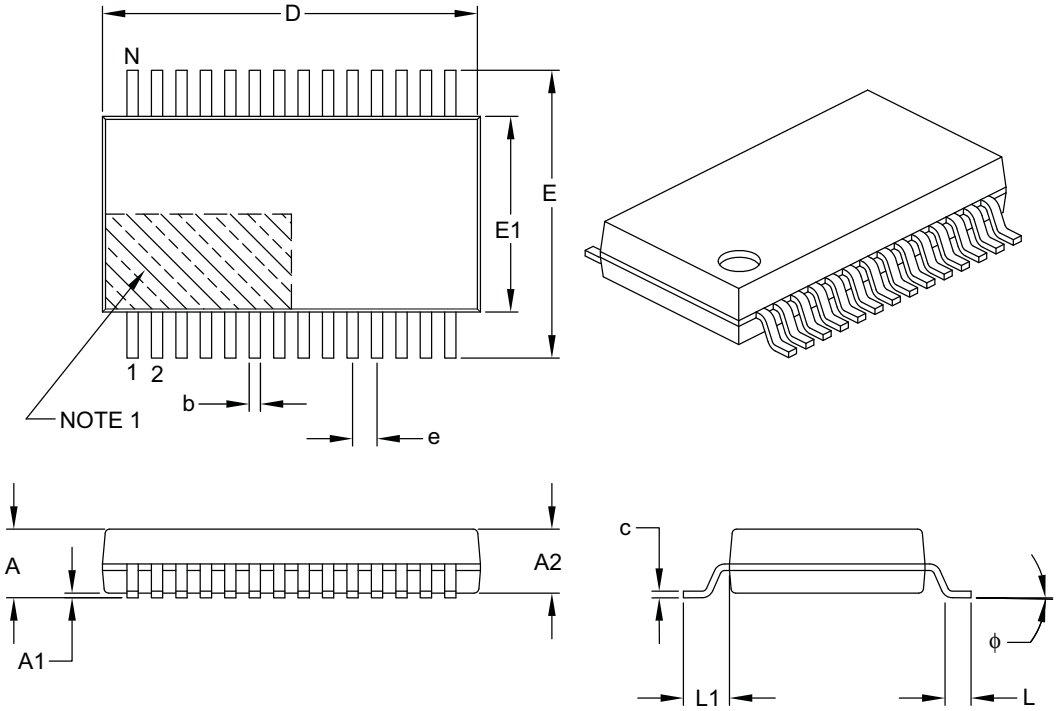

Units		MILLIMETERS		
Dimension Limits		MIN	NOM	MAX
Number of Pins	N	28		
Pitch	e	0.65 BSC		
Overall Height	A	–	–	2.00
Molded Package Thickness	A2	1.65	1.75	1.85
Standoff	A1	0.05	–	–
Overall Width	E	7.40	7.80	8.20
Molded Package Width	E1	5.00	5.30	5.60
Overall Length	D	9.90	10.20	10.50
Foot Length	L	0.55	0.75	0.95
Footprint	L1	1.25 REF		
Lead Thickness	c	0.09	–	0.25
Foot Angle	ϕ	0°	4°	8°
Lead Width	b	0.22	–	0.38

Notes:

1. Pin 1 visual index feature may vary, but must be located within the hatched area.
2. Dimensions D and E1 do not include mold flash or protrusions. Mold flash or protrusions shall not exceed 0.20 mm per side.
3. Dimensioning and tolerancing per ASME Y14.5M.

   BSC: Basic Dimension. Theoretically exact value shown without tolerances.
   REF: Reference Dimension, usually without tolerance, for information purposes only.

Microchip Technology Drawing C04-073B

28-Lead Plastic Shrink Small Outline (SS) - 5.30 mm Body [SSOP]

Note: For the most current package drawings, please see the Microchip Packaging Specification located at http://www.microchip.com/packaging

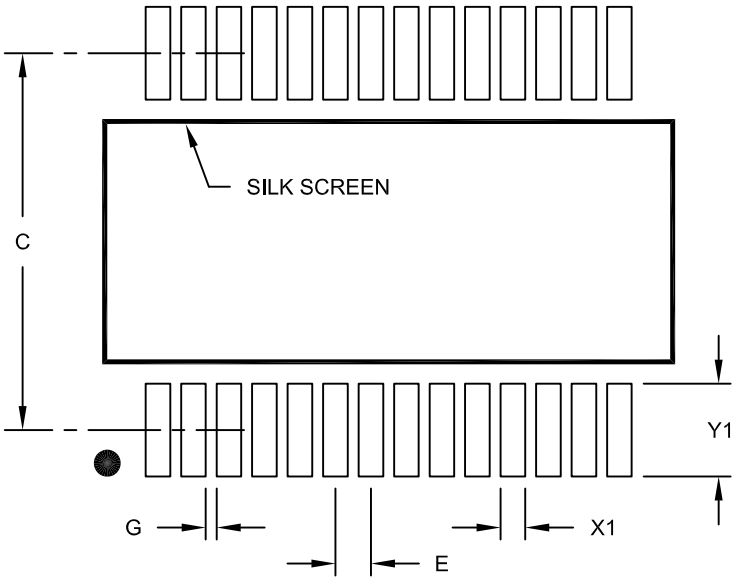

RECOMMENDED LAND PATTERN

Units		MILLIMETERS		
Dimension Limits		MIN	NOM	MAX
Contact Pitch	E		0.65 BSC	
Contact Pad Spacing	C		7.20	
Contact Pad Width (X28)	X1			0.45
Contact Pad Length (X28)	Y1			1.75
Distance Between Pads	G	0.20		

Notes:

1. Dimensioning and tolerancing per ASME Y14.5M

BSC: Basic Dimension. Theoretically exact value shown without tolerances.

Microchip Technology Drawing No. C04-2073A

© 2012-2014 Microchip Technology Inc.

28-Lead Plastic Quad Flat, No Lead Package (ML) – 6x6 mm Body [QFN] with 0.55 mm Contact Length

Note: For the most current package drawings, please see the Microchip Packaging Specification located at http://www.microchip.com/packaging

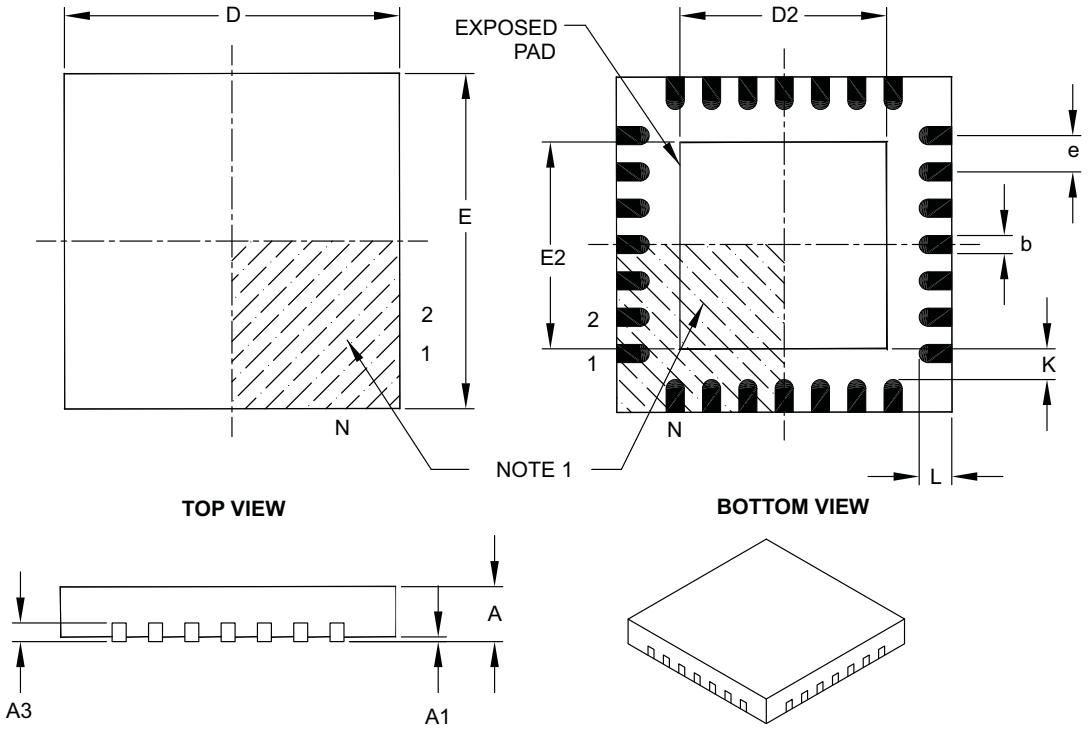

Units		MILLIMETERS		
Dimension Limits		MIN	NOM	MAX
Number of Pins	N	28		
Pitch	e	0.65 BSC		
Overall Height	A	0.80	0.90	1.00
Standoff	A1	0.00	0.02	0.05
Contact Thickness	A3	0.20 REF		
Overall Width	E	6.00 BSC		
Exposed Pad Width	E2	3.65	3.70	4.20
Overall Length	D	6.00 BSC		
Exposed Pad Length	D2	3.65	3.70	4.20
Contact Width	b	0.23	0.30	0.35
Contact Length	L	0.50	0.55	0.70
Contact-to-Exposed Pad	K	0.20	–	–

Notes:

1. Pin 1 visual index feature may vary, but must be located within the hatched area.
2. Package is saw singulated.
3. Dimensioning and tolerancing per ASME Y14.5M.

   BSC: Basic Dimension. Theoretically exact value shown without tolerances.
   REF: Reference Dimension, usually without tolerance, for information purposes only.

Microchip Technology Drawing C04-105B

28-Lead Plastic Quad Flat, No Lead Package (ML) – 6x6 mm Body [QFN] with 0.55 mm Contact Length

Note: For the most current package drawings, please see the Microchip Packaging Specification located at http://www.microchip.com/packaging

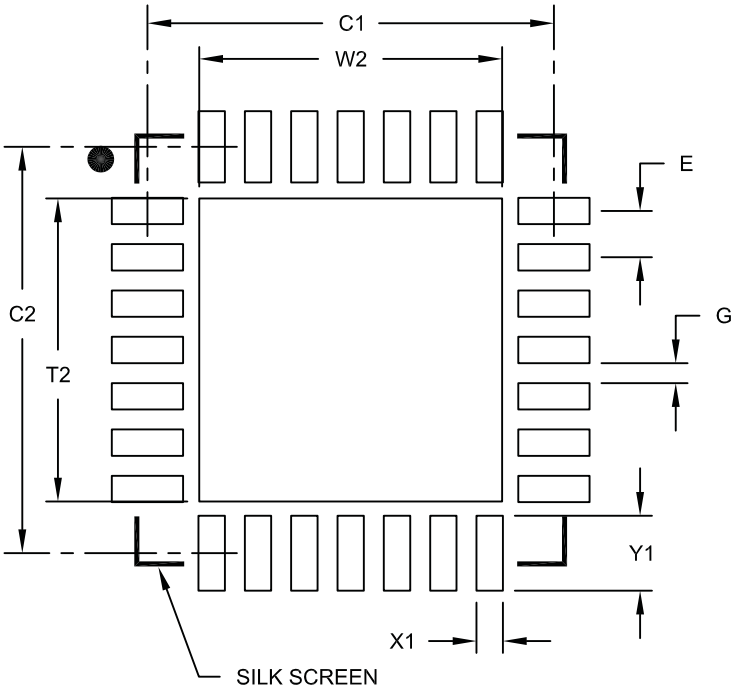

RECOMMENDED LAND PATTERN

Units		MILLIMETERS		
Dimension Limits		MIN	NOM	MAX
Contact Pitch	E		0.65 BSC	
Optional Center Pad Width	W2			4.25
Optional Center Pad Length	T2			4.25
Contact Pad Spacing	C1		5.70	
Contact Pad Spacing	C2		5.70	
Contact Pad Width (X28)	X1			0.37
Contact Pad Length (X28)	Y1			1.00
Distance Between Pads	G	0.20		

Notes:

1. Dimensioning and tolerancing per ASME Y14.5M
   BSC: Basic Dimension. Theoretically exact value shown without tolerances.

Microchip Technology Drawing No. C04-2105A

© 2012-2014 Microchip Technology Inc.

40-Lead Plastic Dual In-Line (P) – 600 mil Body [PDIP]

Note: For the most current package drawings, please see the Microchip Packaging Specification located at http://www.microchip.com/packaging

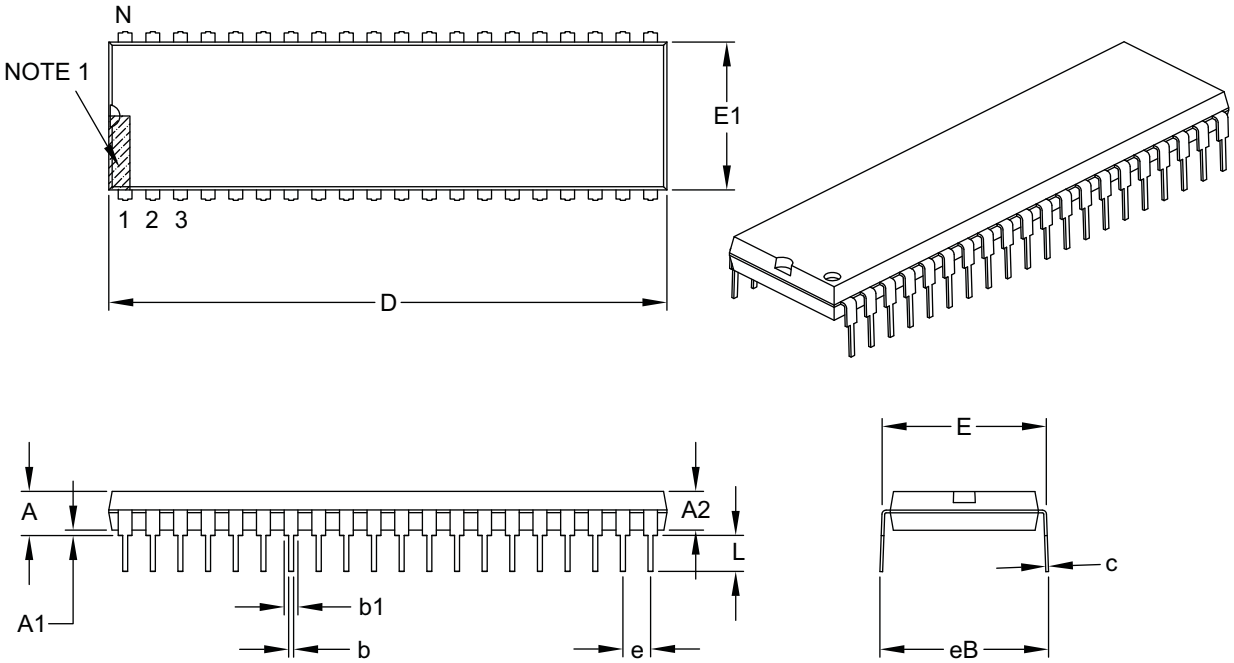

Units		INCHES		
Dimension Limits		MIN	NOM	MAX
Number of Pins	N	40		
Pitch	e	.100 BSC		
Top to Seating Plane	A	–	–	.250
Molded Package Thickness	A2	.125	–	.195
Base to Seating Plane	A1	.015	–	–
Shoulder to Shoulder Width	E	.590	–	.625
Molded Package Width	E1	.485	–	.580
Overall Length	D	1.980	–	2.095
Tip to Seating Plane	L	.115	–	.200
Lead Thickness	c	.008	–	.015
Upper Lead Width	b1	.030	–	.070
Lower Lead Width	b	.014	–	.023
Overall Row Spacing §	eB	–	–	.700

Notes:
1. Pin 1 visual index feature may vary, but must be located within the hatched area.
2. § Significant Characteristic.
3. Dimensions D and E1 do not include mold flash or protrusions. Mold flash or protrusions shall not exceed .010" per side.
4. Dimensioning and tolerancing per ASME Y14.5M.
   BSC: Basic Dimension. Theoretically exact value shown without tolerances.

Microchip Technology Drawing C04-016B

40-Lead Ultra Thin Plastic Quad Flat, No Lead Package (MV) – 5x5x0.5 mm Body [UQFN]

Note: For the most current package drawings, please see the Microchip Packaging Specification located at http://www.microchip.com/packaging

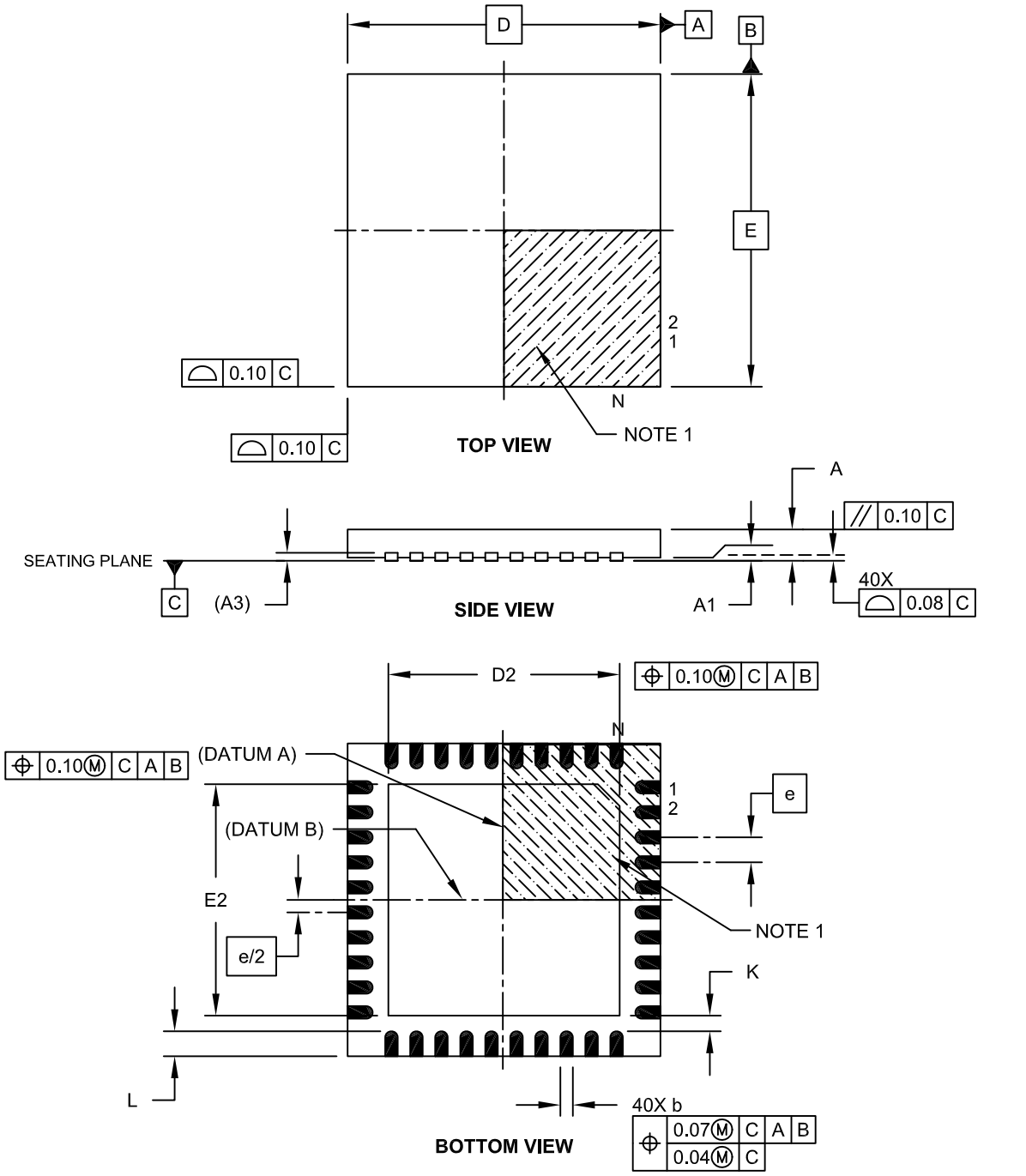

Microchip Technology Drawing C04-156A Sheet 1 of 2

© 2012-2014 Microchip Technology Inc.

40-Lead Ultra Thin Plastic Quad Flat, No Lead Package (MV) – 5x5x0.5 mm Body [UQFN]

Note: For the most current package drawings, please see the Microchip Packaging Specification located at http://www.microchip.com/packaging

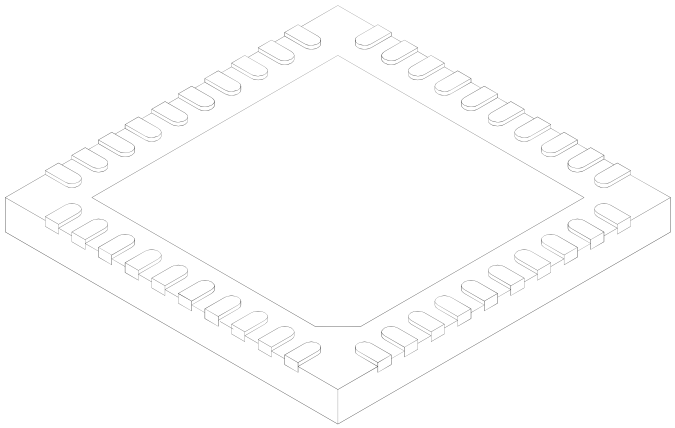

Units		MILLIMETERS		
Dimension Limits		MIN	NOM	MAX
Number of Pins	N	40		
Pitch	e	0.40 BSC		
Overall Height	A	0.45	0.50	0.55
Standoff	A1	0.00	0.02	0.05
Contact Thickness	A3	0.127 REF		
Overall Width	E	5.00 BSC		
Exposed Pad Width	E2	3.60	3.70	3.80
Overall Length	D	5.00 BSC		
Exposed Pad Length	D2	3.60	3.70	3.80
Contact Width	b	0.15	0.20	0.25
Contact Length	L	0.30	0.40	0.50
Contact-to-Exposed Pad	K	0.20	-	-

Notes:

1. Pin 1 visual index feature may vary, but must be located within the hatched area.
2. Package is saw singulated.
3. Dimensioning and tolerancing per ASME Y14.5M.
   BSC: Basic Dimension. Theoretically exact value shown without tolerances.
   REF: Reference Dimension, usually without tolerance, for information purposes only.

Microchip Technology Drawing C04-156A Sheet 2 of 2

40-Lead Plastic Ultra Thin Quad Flat, No Lead Package (MV) - 5x5 mm Body [UQFN]

Note: For the most current package drawings, please see the Microchip Packaging Specification located at http://www.microchip.com/packaging

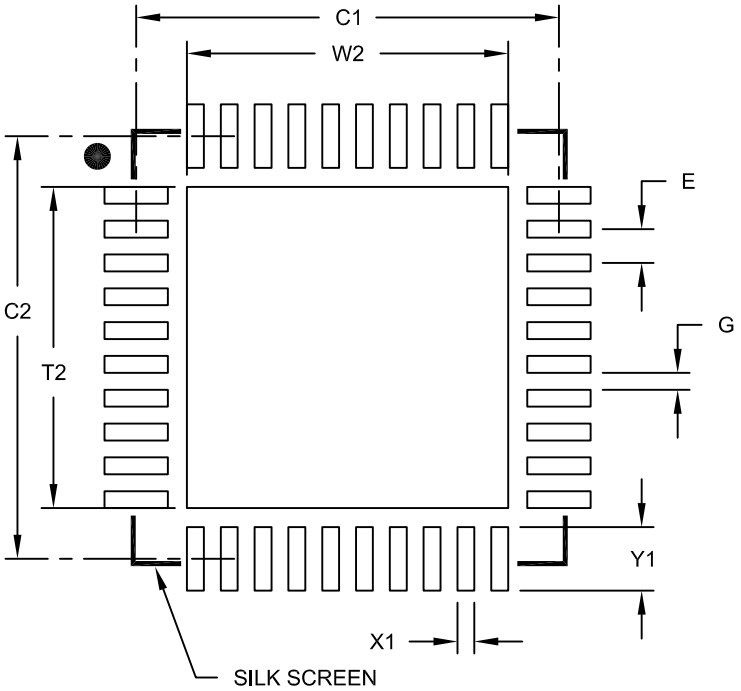

RECOMMENDED LAND PATTERN

Units		MILLIMETERS		
Dimension Limits		MIN	NOM	MAX
Contact Pitch	E	0.40 BSC		
Optional Center Pad Width	W2			3.80
Optional Center Pad Length	T2			3.80
Contact Pad Spacing	C1		5.00	
Contact Pad Spacing	C2		5.00	
Contact Pad Width (X40)	X1			0.20
Contact Pad Length (X40)	Y1			0.75
Distance Between Pads	G	0.20		

Notes:

1. Dimensioning and tolerancing per ASME Y14.5M

BSC: Basic Dimension. Theoretically exact value shown without tolerances.

Microchip Technology Drawing No. C04-2156B

© 2012-2014 Microchip Technology Inc.

44-Lead Plastic Quad Flat, No Lead Package (ML) - 8x8 mm Body [QFN]

Note:	For the most current package drawings, please see the Microchip Packaging Specification located at http://www.microchip.com/packaging

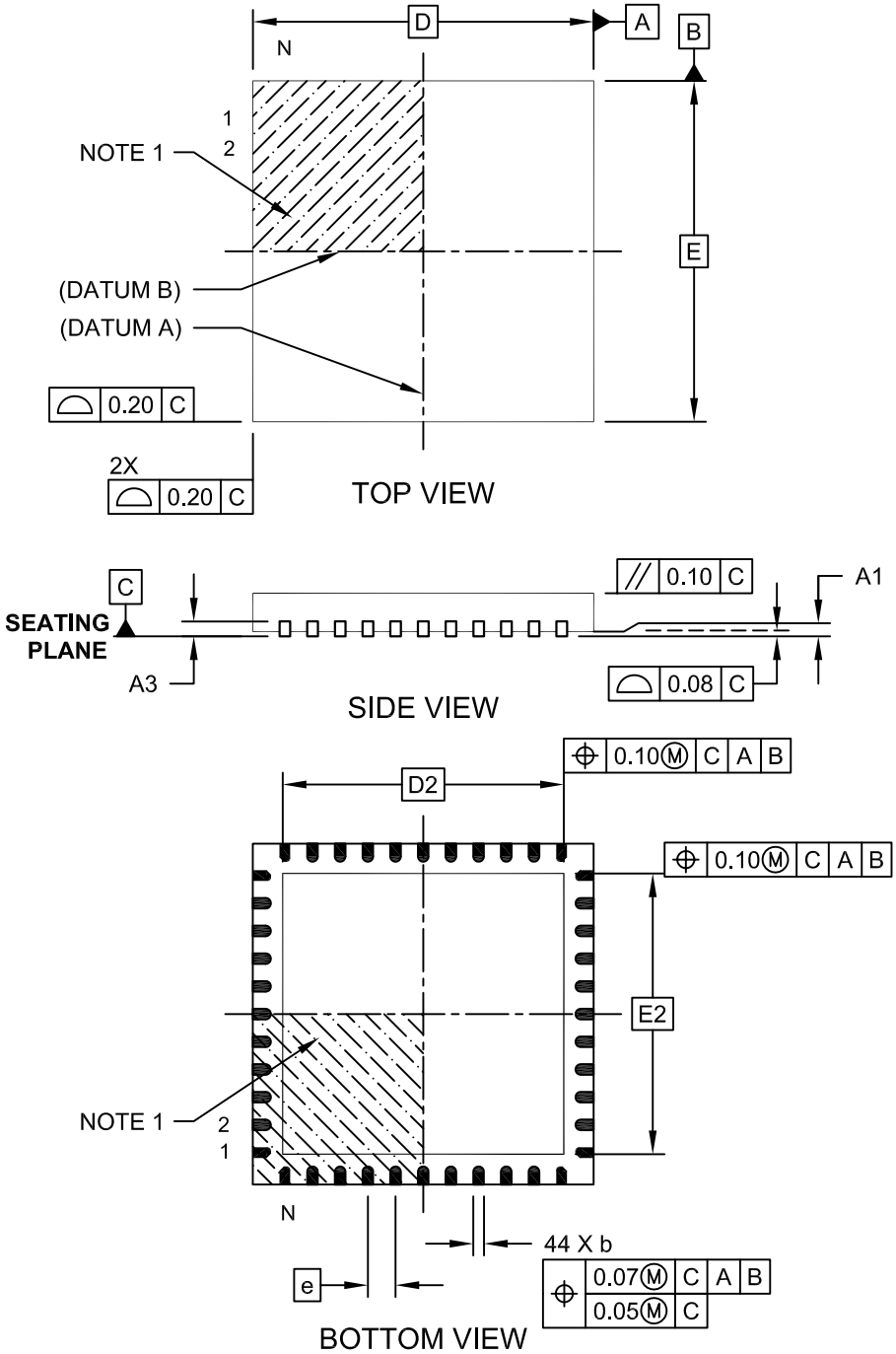

Microchip Technology Drawing C04-103C Sheet 1 of 2

44-Lead Plastic Quad Flat, No Lead Package (ML) - 8x8 mm Body [QFN]

Note: For the most current package drawings, please see the Microchip Packaging Specification located at http://www.microchip.com/packaging

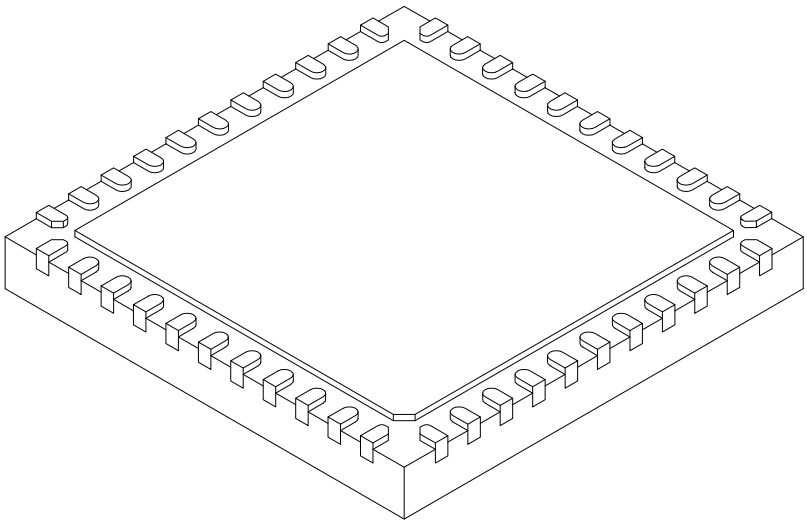

Units		MILLIMETERS		
Dimension Limits		MIN	NOM	MAX
Number of Pins	N	44		
Pitch	e	0.65 BSC		
Overall Height	A	0.80	0.90	1.00
Standoff	A1	0.00	0.02	0.05
Terminal Thickness	A3	0.20 REF		
Overall Width	E	8.00 BSC		
Exposed Pad Width	E2	6.25	6.45	6.60
Overall Length	D	8.00 BSC		
Exposed Pad Length	D2	6.25	6.45	6.60
Terminal Width	b	0.20	0.30	0.35
Terminal Length	L	0.30	0.40	0.50
Terminal-to-Exposed-Pad	K	0.20	-	-

Notes:

1. Pin 1 visual index feature may vary, but must be located within the hatched area.
2. Package is saw singulated
3. Dimensioning and tolerancing per ASME Y14.5M

   BSC: Basic Dimension. Theoretically exact value shown without tolerances.

   REF: Reference Dimension, usually without tolerance, for information purposes only.

Microchip Technology Drawing C04-103C Sheet 2 of 2

© 2012-2014 Microchip Technology Inc.

44-Lead Plastic Quad Flat, No Lead Package (ML) - 8x8 mm Body [QFN]

Note: For the most current package drawings, please see the Microchip Packaging Specification located at http://www.microchip.com/packaging

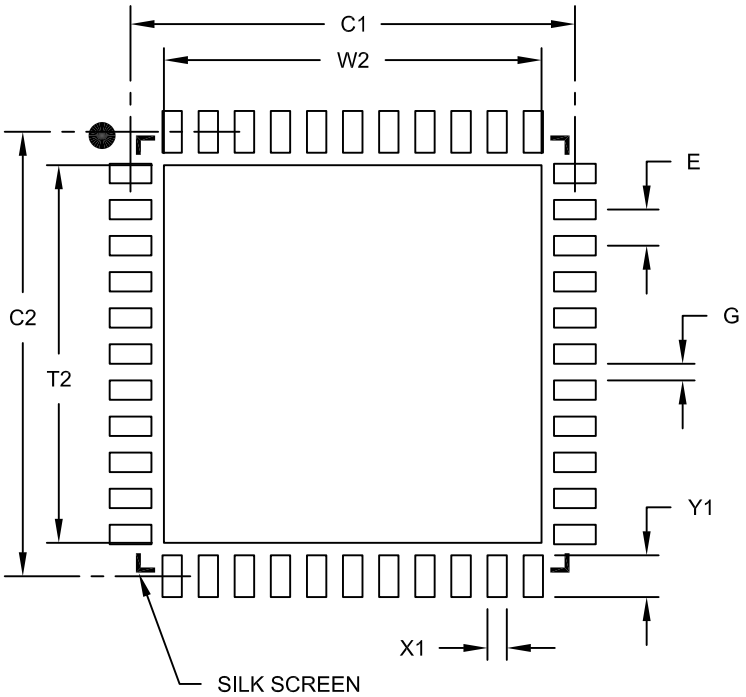

RECOMMENDED LAND PATTERN

Units		MILLIMETERS		
Dimension Limits		MIN	NOM	MAX
Contact Pitch	E	0.65 BSC		
Optional Center Pad Width	W2			6.60
Optional Center Pad Length	T2			6.60
Contact Pad Spacing	C1		8.00	
Contact Pad Spacing	C2		8.00	
Contact Pad Width (X44)	X1			0.35
Contact Pad Length (X44)	Y1			0.85
Distance Between Pads	G	0.25		

Notes:

1. Dimensioning and tolerancing per ASME Y14.5M

   BSC: Basic Dimension. Theoretically exact value shown without tolerances.

Microchip Technology Drawing No. C04-2103B

44-Lead Plastic Thin Quad Flatpack (PT) – 10x10x1 mm Body, 2.00 mm [TQFP]

Note: For the most current package drawings, please see the Microchip Packaging Specification located at http://www.microchip.com/packaging

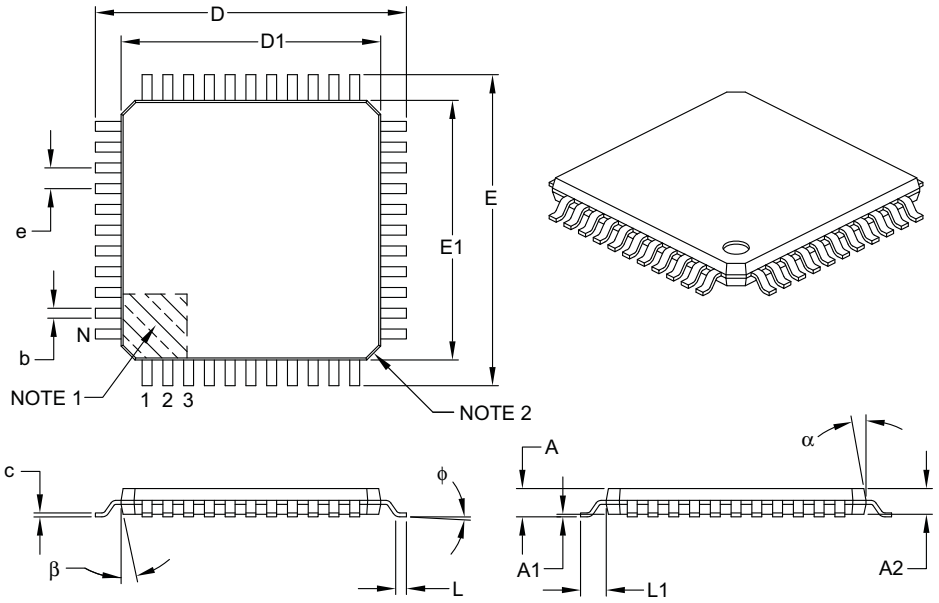

Units		MILLIMETERS		
Dimension Limits		MIN	NOM	MAX
Number of Leads	N	44		
Lead Pitch	e	0.80 BSC		
Overall Height	A	–	–	1.20
Molded Package Thickness	A2	0.95	1.00	1.05
Standoff	A1	0.05	–	0.15
Foot Length	L	0.45	0.60	0.75
Footprint	L1	1.00 REF		
Foot Angle	ϕ	0°	3.5°	7°
Overall Width	E	12.00 BSC		
Overall Length	D	12.00 BSC		
Molded Package Width	E1	10.00 BSC		
Molded Package Length	D1	10.00 BSC		
Lead Thickness	c	0.09	–	0.20
Lead Width	b	0.30	0.37	0.45
Mold Draft Angle Top	α	11°	12°	13°
Mold Draft Angle Bottom	β	11°	12°	13°

Notes:

1. Pin 1 visual index feature may vary, but must be located within the hatched area.
2. Chamfers at corners are optional; size may vary.
3. Dimensions D1 and E1 do not include mold flash or protrusions. Mold flash or protrusions shall not exceed 0.25 mm per side.
4. Dimensioning and tolerancing per ASME Y14.5M.

   BSC: Basic Dimension. Theoretically exact value shown without tolerances.

   REF: Reference Dimension, usually without tolerance, for information purposes only.

Microchip Technology Drawing C04-076B

© 2012-2014 Microchip Technology Inc.

44-Lead Plastic Thin Quad Flatpack (PT) 10X10X1 mm Body, 2.00 mm Footprint [TQFP]

Note: For the most current package drawings, please see the Microchip Packaging Specification located at http://www.microchip.com/packaging

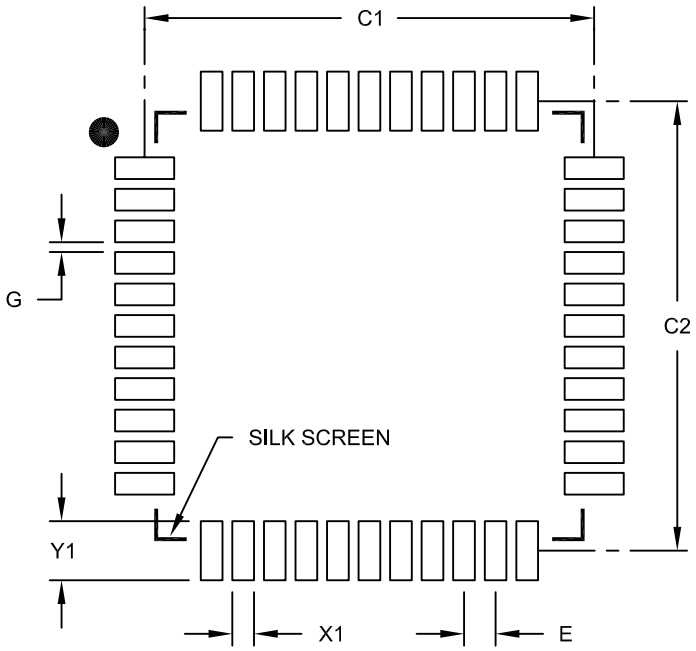

RECOMMENDED LAND PATTERN

Units		MILLIMETERS		
Dimension Limits		MIN	NOM	MAX
Contact Pitch	E		0.80 BSC	
Contact Pad Spacing	C1		11.40	
Contact Pad Spacing	C2		11.40	
Contact Pad Width (X44)	X1			0.55
Contact Pad Length (X44)	Y1			1.50
Distance Between Pads	G	0.25		

Notes:

1. Dimensioning and tolerancing per ASME Y14.5M
   BSC: Basic Dimension. Theoretically exact value shown without tolerances.

Microchip Technology Drawing No. C04-2076B

APPENDIX A: DATA SHEET REVISION HISTORY

Revision A (06/2012)

Initial release.

Revision B (11/2012)

Minor updates.

Revision C (08/2014)

Change from Preliminary to Final data sheet.

Corrected the following Tables: Family Types Table on page 3, Table 3-3, Table 3-8, Table 20-3, Table 22-2, Table 22-3, Table 23-1, Table 25-3, Table 30-1, Table 30-2, Table 30-3, Table 30-6, Table 30-7, Table 30-13, Table 30-14, Table 30-15, Table 30-16, Table 30-20.

Corrected the following Sections: Section 3.2, Section 9.2, Section 13.3, Section 17.1.6, Section 15.1, Section 15.3, Section 17.2.5, Section 18.2, Section 18.3, Section 19.0, Section 22.6.5, Section 22.9, Section 23.0, Section 23.1, Section 24.2.4, Section 24.2.5, Section 24.2.7, Section 24.8, Section 25.0, Section 26.6.7.4, Section 30.3.

Corrected the following Registers: Register 4-2, Register 8-2, Register 8-5, Register 17-3, Register 18-1, Register 24-3, Register 24-4.

Corrected Equation 17-1.

Corrected Figure 30-9. Removed Figure 24-21.

© 2012-2014 Microchip Technology Inc.

THE MICROCHIP WEB SITE

Microchip provides online support via our WWW site at www.microchip.com. This web site is used as a means to make files and information easily available to customers. Accessible by using your favorite Internet browser, the web site contains the following information:

- **Product Support** – Data sheets and errata, application notes and sample programs, design resources, user's guides and hardware support documents, latest software releases and archived software
- **General Technical Support** – Frequently Asked Questions (FAQ), technical support requests, online discussion groups, Microchip consultant program member listing
- **Business of Microchip** – Product selector and ordering guides, latest Microchip press releases, listing of seminars and events, listings of Microchip sales offices, distributors and factory representatives

CUSTOMER CHANGE NOTIFICATION SERVICE

Microchip's customer notification service helps keep customers current on Microchip products. Subscribers will receive e-mail notification whenever there are changes, updates, revisions or errata related to a specified product family or development tool of interest.

To register, access the Microchip web site at www.microchip.com. Under "Support", click on "Customer Change Notification" and follow the registration instructions.

CUSTOMER SUPPORT

Users of Microchip products can receive assistance through several channels:

- Distributor or Representative
- Local Sales Office
- Field Application Engineer (FAE)
- Technical Support

Customers should contact their distributor, representative or Field Application Engineer (FAE) for support. Local sales offices are also available to help customers. A listing of sales offices and locations is included in the back of this document.

Technical support is available through the web site at: http://microchip.com/support

PRODUCT IDENTIFICATION SYSTEM

To order or obtain information, e.g., on pricing or delivery, refer to the factory or the listed sales office.

PART NO.	[X][1]	-	X	/XX	XXX
Device	Tape and Reel Option		Temperature Range	Package	Pattern

Device:	PIC16F1784, PIC16LF1784, PIC16F1786, PIC16LF1786, PIC16F1787, PIC16LF1787	
Tape and Reel Option:	Blank	= Standard packaging (tube or tray)
	T	= Tape and Reel[1]
Temperature Range:	I	= -40°C to +85°C (Industrial)
	E	= -40°C to +125°C (Extended)
Package:[2]	ML	= QFN
	MV	= UQFN
	P	= PDIP
	PT	= TQFP
	SP	= SPDIP
	SO	= SOIC
	SS	= SSOP
Pattern:	QTP, SQTP, Code or Special Requirements (blank otherwise)	

Examples:

a) PIC16LF1784/7- I/P
Industrial temperature
PDIP package

b) PIC16F1786- E/SS
Extended temperature,
SSOP package

Note 1: Tape and Reel identifier only appears in the catalog part number description. This identifier is used for ordering purposes and is not printed on the device package. Check with your Microchip Sales Office for package availability with the Tape and Reel option.

2: Small form-factor packaging options may be available. Please check www.microchip.com/packaging for small-form factor package availability, or contact your local Sales Office.

© 2012-2014 Microchip Technology Inc.

Note the following details of the code protection feature on Microchip devices:

- Microchip products meet the specification contained in their particular Microchip Data Sheet.
- Microchip believes that its family of products is one of the most secure families of its kind on the market today, when used in the intended manner and under normal conditions.
- There are dishonest and possibly illegal methods used to breach the code protection feature. All of these methods, to our knowledge, require using the Microchip products in a manner outside the operating specifications contained in Microchip's Data Sheets. Most likely, the person doing so is engaged in theft of intellectual property.
- Microchip is willing to work with the customer who is concerned about the integrity of their code.
- Neither Microchip nor any other semiconductor manufacturer can guarantee the security of their code. Code protection does not mean that we are guaranteeing the product as "unbreakable."

Code protection is constantly evolving. We at Microchip are committed to continuously improving the code protection features of our products. Attempts to break Microchip's code protection feature may be a violation of the Digital Millennium Copyright Act. If such acts allow unauthorized access to your software or other copyrighted work, you may have a right to sue for relief under that Act.

Information contained in this publication regarding device applications and the like is provided only for your convenience and may be superseded by updates. It is your responsibility to ensure that your application meets with your specifications. MICROCHIP MAKES NO REPRESENTATIONS OR WARRANTIES OF ANY KIND WHETHER EXPRESS OR IMPLIED, WRITTEN OR ORAL, STATUTORY OR OTHERWISE, RELATED TO THE INFORMATION, INCLUDING BUT NOT LIMITED TO ITS CONDITION, QUALITY, PERFORMANCE, MERCHANTABILITY OR FITNESS FOR PURPOSE**.** Microchip disclaims all liability arising from this information and its use. Use of Microchip devices in life support and/or safety applications is entirely at the buyer's risk, and the buyer agrees to defend, indemnify and hold harmless Microchip from any and all damages, claims, suits, or expenses resulting from such use. No licenses are conveyed, implicitly or otherwise, under any Microchip intellectual property rights.

QUALITY MANAGEMENT SYSTEM
CERTIFIED BY DNV
═ ISO/TS 16949 ═

Trademarks

The Microchip name and logo, the Microchip logo, dsPIC, FlashFlex, flexPWR, JukeBlox, KEELOQ, KEELOQ logo, Kleer, LANCheck, MediaLB, MOST, MOST logo, MPLAB, OptoLyzer, PIC, PICSTART, PIC32 logo, RightTouch, SpyNIC, SST, SST Logo, SuperFlash and UNI/O are registered trademarks of Microchip Technology Incorporated in the U.S.A. and other countries.

The Embedded Control Solutions Company and mTouch are registered trademarks of Microchip Technology Incorporated in the U.S.A.

Analog-for-the-Digital Age, BodyCom, chipKIT, chipKIT logo, CodeGuard, dsPICDEM, dsPICDEM.net, ECAN, In-Circuit Serial Programming, ICSP, Inter-Chip Connectivity, KleerNet, KleerNet logo, MiWi, MPASM, MPF, MPLAB Certified logo, MPLIB, MPLINK, MultiTRAK, NetDetach, Omniscient Code Generation, PICDEM, PICDEM.net, PICkit, PICtail, RightTouch logo, REAL ICE, SQI, Serial Quad I/O, Total Endurance, TSHARC, USBCheck, VariSense, ViewSpan, WiperLock, Wireless DNA, and ZENA are trademarks of Microchip Technology Incorporated in the U.S.A. and other countries.

SQTP is a service mark of Microchip Technology Incorporated in the U.S.A.

Silicon Storage Technology is a registered trademark of Microchip Technology Inc. in other countries.

GestIC is a registered trademarks of Microchip Technology Germany II GmbH & Co. KG, a subsidiary of Microchip Technology Inc., in other countries.

All other trademarks mentioned herein are property of their respective companies.

© 2012-2014, Microchip Technology Incorporated, Printed in the U.S.A., All Rights Reserved.

ISBN: 978-1-63276-525-3

Microchip received ISO/TS-16949:2009 certification for its worldwide headquarters, design and wafer fabrication facilities in Chandler and Tempe, Arizona; Gresham, Oregon and design centers in California and India. The Company's quality system processes and procedures are for its PIC® MCUs and dsPIC® DSCs, KEELOQ® code hopping devices, Serial EEPROMs, microperipherals, nonvolatile memory and analog products. In addition, Microchip's quality system for the design and manufacture of development systems is ISO 9001:2000 certified.

Worldwide Sales and Service

AMERICAS

Corporate Office
2355 West Chandler Blvd.
Chandler, AZ 85224-6199
Tel: 480-792-7200
Fax: 480-792-7277
Technical Support:
http://www.microchip.com/support
Web Address:
www.microchip.com

Atlanta
Duluth, GA
Tel: 678-957-9614
Fax: 678-957-1455

Austin, TX
Tel: 512-257-3370

Boston
Westborough, MA
Tel: 774-760-0087
Fax: 774-760-0088

Chicago
Itasca, IL
Tel: 630-285-0071
Fax: 630-285-0075

Cleveland
Independence, OH
Tel: 216-447-0464
Fax: 216-447-0643

Dallas
Addison, TX
Tel: 972-818-7423
Fax: 972-818-2924

Detroit
Novi, MI
Tel: 248-848-4000

Houston, TX
Tel: 281-894-5983

Indianapolis
Noblesville, IN
Tel: 317-773-8323
Fax: 317-773-5453

Los Angeles
Mission Viejo, CA
Tel: 949-462-9523
Fax: 949-462-9608

New York, NY
Tel: 631-435-6000

San Jose, CA
Tel: 408-735-9110

Canada - Toronto
Tel: 905-673-0699
Fax: 905-673-6509

ASIA/PACIFIC

Asia Pacific Office
Suites 3707-14, 37th Floor
Tower 6, The Gateway
Harbour City, Kowloon
Hong Kong
Tel: 852-2943-5100
Fax: 852-2401-3431

Australia - Sydney
Tel: 61-2-9868-6733
Fax: 61-2-9868-6755

China - Beijing
Tel: 86-10-8569-7000
Fax: 86-10-8528-2104

China - Chengdu
Tel: 86-28-8665-5511
Fax: 86-28-8665-7889

China - Chongqing
Tel: 86-23-8980-9588
Fax: 86-23-8980-9500

China - Hangzhou
Tel: 86-571-8792-8115
Fax: 86-571-8792-8116

China - Hong Kong SAR
Tel: 852-2943-5100
Fax: 852-2401-3431

China - Nanjing
Tel: 86-25-8473-2460
Fax: 86-25-8473-2470

China - Qingdao
Tel: 86-532-8502-7355
Fax: 86-532-8502-7205

China - Shanghai
Tel: 86-21-5407-5533
Fax: 86-21-5407-5066

China - Shenyang
Tel: 86-24-2334-2829
Fax: 86-24-2334-2393

China - Shenzhen
Tel: 86-755-8864-2200
Fax: 86-755-8203-1760

China - Wuhan
Tel: 86-27-5980-5300
Fax: 86-27-5980-5118

China - Xian
Tel: 86-29-8833-7252
Fax: 86-29-8833-7256

China - Xiamen
Tel: 86-592-2388138
Fax: 86-592-2388130

China - Zhuhai
Tel: 86-756-3210040
Fax: 86-756-3210049

ASIA/PACIFIC

India - Bangalore
Tel: 91-80-3090-4444
Fax: 91-80-3090-4123

India - New Delhi
Tel: 91-11-4160-8631
Fax: 91-11-4160-8632

India - Pune
Tel: 91-20-3019-1500

Japan - Osaka
Tel: 81-6-6152-7160
Fax: 81-6-6152-9310

Japan - Tokyo
Tel: 81-3-6880- 3770
Fax: 81-3-6880-3771

Korea - Daegu
Tel: 82-53-744-4301
Fax: 82-53-744-4302

Korea - Seoul
Tel: 82-2-554-7200
Fax: 82-2-558-5932 or
82-2-558-5934

Malaysia - Kuala Lumpur
Tel: 60-3-6201-9857
Fax: 60-3-6201-9859

Malaysia - Penang
Tel: 60-4-227-8870
Fax: 60-4-227-4068

Philippines - Manila
Tel: 63-2-634-9065
Fax: 63-2-634-9069

Singapore
Tel: 65-6334-8870
Fax: 65-6334-8850

Taiwan - Hsin Chu
Tel: 886-3-5778-366
Fax: 886-3-5770-955

Taiwan - Kaohsiung
Tel: 886-7-213-7830

Taiwan - Taipei
Tel: 886-2-2508-8600
Fax: 886-2-2508-0102

Thailand - Bangkok
Tel: 66-2-694-1351
Fax: 66-2-694-1350

EUROPE

Austria - Wels
Tel: 43-7242-2244-39
Fax: 43-7242-2244-393

Denmark - Copenhagen
Tel: 45-4450-2828
Fax: 45-4485-2829

France - Paris
Tel: 33-1-69-53-63-20
Fax: 33-1-69-30-90-79

Germany - Dusseldorf
Tel: 49-2129-3766400

Germany - Munich
Tel: 49-89-627-144-0
Fax: 49-89-627-144-44

Germany - Pforzheim
Tel: 49-7231-424750

Italy - Milan
Tel: 39-0331-742611
Fax: 39-0331-466781

Italy - Venice
Tel: 39-049-7625286

Netherlands - Drunen
Tel: 31-416-690399
Fax: 31-416-690340

Poland - Warsaw
Tel: 48-22-3325737

Spain - Madrid
Tel: 34-91-708-08-90
Fax: 34-91-708-08-91

Sweden - Stockholm
Tel: 46-8-5090-4654

UK - Wokingham
Tel: 44-118-921-5800
Fax: 44-118-921-5820

03/25/14

© 2012-2014 Microchip Technology Inc.

Mouser Electronics

Authorized Distributor

Click to View Pricing, Inventory, Delivery & Lifecycle Information:

Microchip:

PIC16F1786-I/SP PIC16F1787-I/PT PIC16F1784-I/P PIC16F1786-I/ML PIC16F1784-I/MV PIC16F1784-I/ML PIC16F1786-I/SS PIC16F1787-I/MV PIC16F1784-I/PT PIC16F1787-I/ML PIC16F1787-I/P PIC16F1786-E/SS PIC16F1784-E/ML PIC16F1784T-I/PT PIC16F1787T-I/ML PIC16F1784-E/PT PIC16F1787-E/PT PIC16F1786-E/ML PIC16F1784-E/MV PIC16F1787-E/MV PIC16F1786T-I/SO PIC16F1784T-I/MV PIC16F1786T-I/ML PIC16F1787T-I/MV PIC16F1787-E/ML PIC16F1784-E/P PIC16F1786-E/SP PIC16F1787-E/P PIC16F1784T-I/ML PIC16F1786T-I/SS PIC16F1786-I/SO PIC16F1787T-I/PT PIC16F1786-E/SO PIC16LF1786-I/SO PIC16LF1787-I/P PIC16LF1784-I/ML PIC16LF1786T-I/SS PIC16LF1787-E/MV PIC16LF1787-E/ML PIC16LF1786-E/SO PIC16LF1787-I/PT PIC16LF1784T-I/ML PIC16LF1787-E/PT PIC16LF1787-E/P PIC16LF1784-I/PT PIC16LF1784-I/MV PIC16LF1786-I/SS PIC16LF1784-I/P PIC16LF1787-I/ML PIC16LF1786-E/SS PIC16LF1787T-I/ML PIC16LF1786T-I/SO PIC16LF1786-E/SP PIC16LF1787T-I/MV PIC16LF1786-I/SP PIC16LF1787-I/MV PIC16LF1786T-I/ML PIC16LF1784T-I/MV PIC16LF1784-E/P PIC16LF1784-E/PT PIC16LF1784T-I/PT PIC16LF1787T-I/PT PIC16LF1786-E/ML PIC16LF1786-I/ML

OCEAN CHIPS
Океан Электроники
Поставка электронных компонентов

Компания «Океан Электроники» предлагает заключение долгосрочных отношений при поставках импортных электронных компонентов на взаимовыгодных условиях!

Наши преимущества:

- Поставка оригинальных импортных электронных компонентов напрямую с производств Америки, Европы и Азии, а так же с крупнейших складов мира;
- Широкая линейка поставок активных и пассивных импортных электронных компонентов (более 30 млн. наименований);
- Поставка сложных, дефицитных, либо снятых с производства позиций;
- Оперативные сроки поставки под заказ (от 5 рабочих дней);
- Экспресс доставка в любую точку России;
- Помощь Конструкторского Отдела и консультации квалифицированных инженеров;
- Техническая поддержка проекта, помощь в подборе аналогов, поставка прототипов;
- Поставка электронных компонентов под контролем ВП;
- Система менеджмента качества сертифицирована по Международному стандарту ISO 9001;
- При необходимости вся продукция военного и аэрокосмического назначения проходит испытания и сертификацию в лаборатории (по согласованию с заказчиком);
- Поставка специализированных компонентов военного и аэрокосмического уровня качества (Xilinx, Altera, Analog Devices, Intersil, Interpoint, Microsemi, Actel, Aeroflex, Peregrine, VPT, Syfer, Eurofarad, Texas Instruments, MS Kennedy, Miteq, Cobham, E2V, MA-COM, Hittite, Mini-Circuits, General Dynamics и др.);

Компания «Океан Электроники» является официальным дистрибьютором и эксклюзивным представителем в России одного из крупнейших производителей разъемов военного и аэрокосмического назначения **«JONHON»**, а так же официальным дистрибьютором и эксклюзивным представителем в России производителя высокотехнологичных и надежных решений для передачи СВЧ сигналов **«FORSTAR»**.

AVIC JONHON

«JONHON» (основан в 1970 г.)

Разъемы специального, военного и аэрокосмического назначения:

(Применяются в военной, авиационной, аэрокосмической, морской, железнодорожной, горно- и нефтедобывающей отраслях промышленности)

«FORSTAR» (основан в 1998 г.)

ВЧ соединители, коаксиальные кабели, кабельные сборки и микроволновые компоненты:

(Применяются в телекоммуникациях гражданского и специального назначения, в средствах связи, РЛС, а так же военной, авиационной и аэрокосмической отраслях промышленности).

FORSTAR®

Телефон: 8 (812) 309-75-97 (многоканальный)
Факс: 8 (812) 320-03-32
Электронная почта: ocean@oceanchips.ru
Web: http://oceanchips.ru/
Адрес: 198099, г. Санкт-Петербург, ул. Калинина, д. 2, корп. 4, лит. А