Amphenol
MIL-DTL-26482, Series 2, Matrix®

TABLE OF CONTENTS

MIL-DTL-26482, Series 2, Matrix®

- Design Characteristics, Customer Options 333
- Insert Availability and Identification, Alternate Positioning 334
- Insert Arrangement Drawings 335, 336
- Class Descriptions, Performance Specifications 337
- How to Order (Military and Commercial) 338

Shell Styles:

- Wall Mounting Receptacle with Narrow Flange, Wall Mounting Receptacle with Wide Flange 339
- Cable Connecting Receptacle, Jam Nut Receptacle 340
- Straight Plug, Straight Plug with RFI Grounding Fingers 341

Contacts and Tools:

- Contact Information, Sealing Plugs, Crimping and Insertion/Removal Tools 342
- Assembly Instructions 343, 344

Additional MIL-DTL-26482 Connectors

- Brief Description of Commercial/Military MIL-DTL-26482, Series 1 345
  (Covered in-depth in Amphenol Industrial Catalog 12-070)

MIL-DTL-26482 Series 2, Matrix® Typical Markets:

- Military & Commercial Aviation
  - Cockpit, Landing Gear, Aircraft Frame
- Military Aircraft Carriers
- Instrumentation/Process Control/Test Equipment
- C4ISR

Amphenol Aerospace

With Crimp Rear Release Contacts

Amphenol Aerospace offers the Matrix® Product line of MIL-DTL-26482*, Series 2 connectors.

This series provides a bayonet coupling connector with crimp rear insertable, rear releasable contacts.

DESIGN CHARACTERISTICS

- Medium size, environmentally resistant connector
- Recommended operating voltage to 1,000 VAC (RMS) at sea level
- Quick positive coupling assured by 3 point bayonet coupling system
- Visual confirmation of complete coupling
- Eliminates mismating by the use of five key/keyway design
- Insertion and removal of contacts from the rear of the connector assures no damage to the front that might affect the sealing characteristics
- Utilizes same standard qualified rear-release type plastic tool for contact insertion and removal
- Contacts are qualified to SAE AS39029** requirements – BIN coded (three color bands), and are crimped with standard crimp tools per MIL-DTL-22520
- Grommets are constructed of tear-resistant elastomer and experience no degradation when exposed to a broad range of fluids
- Sealing over a range of wire diameters is assured by a triple webbed grommet at the rear of the connector
- Closed entry socket side of the insert is designed with a lead-in chamfer and a hard face that will accept a pin contact bent within pre-established limits
- Elastomer interfacial seal on the pin side has raised barriers around each pin which displace into the socket chamfer when mated, providing a positive moisture seal

CUSTOMER OPTIONS

- Shell styles within this family include: Wall mount with either a narrow or a wide flange, jam nut single hole mount, and cable connecting receptacles, along with standard plugs or plugs with RFI grounding fingers, in shell sizes 8 to 24
- MS and Proprietary versions available
- Accommodation of contact sizes 20, 16 and 12
- 34 insert arrangement patterns available, accommodating from a minimum of 3 to a maximum of 55 circuits
- Alternate positioning available
- Various finishes are available (for information on non-cadmium zinc alloy plating, consult Amphenol Aerospace)

* MIL-DTL-26482 supersedes MIL-C-26482

** SAE AS39029 supersedes MIL-C-39029

MS3470
wall mounting receptacle with narrow flange

MS3472
wall mounting receptacle with wide flange

MS3471
cable connecting receptacle

MS3474
jam nut receptacle

MS3476
straight plug

MS3475
plug with RFI grounding fingers

Alternate Rotations

INSERT ARRANGEMENTS

Insert Arrangement	Service Rating	Total Contacts	Contact Size		
			12	16	20
8-33	I	3			3
8-98	I	3			3
10-6	I	6			6
12-3	II	3		3	
12-8	I	8			8
12-10	I	10			10
14-4	I	4	4		
14-5	II	5		5	
14-9	I	9	4		5
14-12	I	12		4	8
14-15	I	15		1	14
14-18	I	18			18
14-19	I	19			19
16-8	II	8		8	
16-23S	I	23		1	22
16-26	I	26			26
18-8	I	8	8		
18-11	II	11		11	
18-30	I	30		1	29
18-32	I	32			32
20-16	II	16		16	
20-24S	I	24			24
20-39	I	39		2	37
20-41	I	41			41
22-12	I	12	12		
22-19S	I	19	19		
22-21	II	21		21	
22-32S	I	32			32
22-41	I	41		14	27
22-55	I	55			55
22-95	I	32	6		26
24-19S	II	19	19		
24-31	I	31		31	
24-61	I	61			61

Arrangements designated with an S are tooled in socket only.

ALTERNATE ROTATIONS OF INSERT

To avoid cross-plugging problems in applications requiring the use of more than one connector of the same size and arrangement, alternate rotations are available as indicated in the chart below.

As shown in the diagram, the front face of the pin insert is rotated within the shell in a clockwise direction from the normal shell key. The socket insert would be rotated counter-clockwise the same number of degrees in respect to the normal shell key.

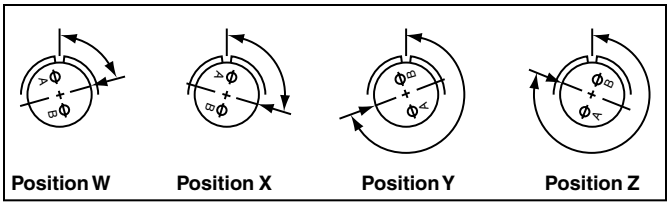

View looking into front face of pin insert or rear of socket insert.

Insert Arrangement	Degrees			
	W	X	Y	Z
8-33	90	–	–	–
8-98	–	–	–	–
10-6	90	–	–	–
12-3	–	–	180	–
12-8	90	112	203	292
12-10	60	155	270	295
14-4	45	–	–	–
14-5	40	92	184	273
14-9	15	90	180	270
14-12	43	90	–	–
14-15	17	110	155	234
14-18	15	90	180	270
14-19	30	165	315	–
16-8	54	152	180	331
16-23	158	270	–	–
16-26	60	–	275	338
18-8	180	–	–	–
18-11	62	119	241	340
18-30	180	193	285	350
18-32	85	138	222	265
20-16	238	318	333	347
20-24	70	145	215	290
20-39	63	144	252	333
20-41	45	126	225	–
22-12	–	–	–	–
22-19	15	90	225	308
22-21	16	135	175	349
22-32	72	145	215	288
22-41	39	135	264	–
22-55	30	142	226	314
22-95	26	180	266	–
24-19	30	165	315	–
24-31	90	225	255	–
24-61	90	180	270	324

Amphenol Aerospace

Front face of pin insert or rear face of socket insert illustrated

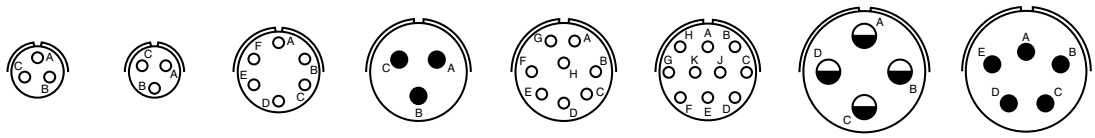

Insert Arrangement	8-33	8-98	10-06	12-03	12-08	12-10	14-04	14-05
Service Rating	I	I	I	II	I	I	I	II
Number of Contacts	3	3	6	3	8	10	4	5
Contact Size	20	20	20	16	20	20	12	16

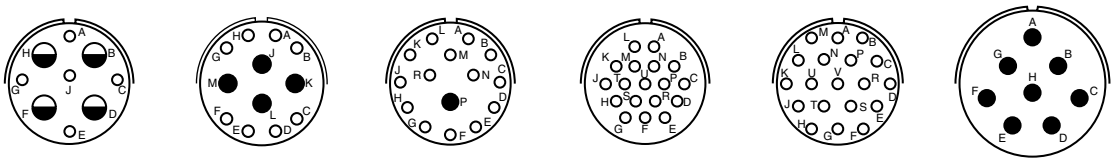

Insert Arrangement	14-09		14-12		14-15		14-18	14-19	16-08
Service Rating	I		I		I		I	I	II
Number of Contacts	5	4	8	4	14	1	18	19	8
Contact Size	20	12	20	16	20	16	20	20	16

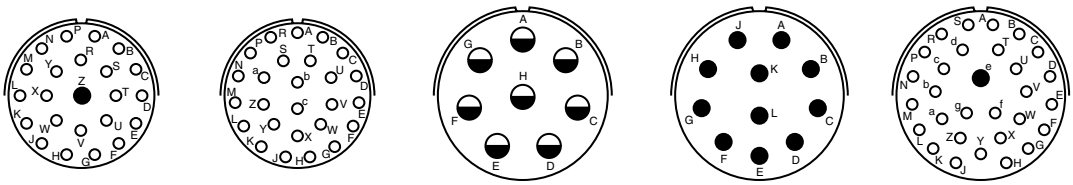

Insert Arrangement	16-23		16-26	18-08	18-11	18-30	
Service Rating	I		I	I	II	I	
Number of Contacts	22	1	26	8	11	29	1
Contact Size	20	16	20	12	16	20	16

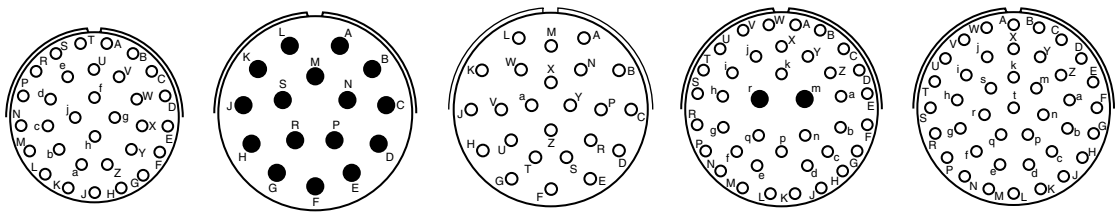

Insert Arrangement	18-32	20-16	20-24	20-39		20-41
Service Rating	I	II	I	I		I
Number of Contacts	32	16	24	37	2	41
Contact Size	20	16	20	20	16	20

NOTE: Connectors sold as mil-spec connectors will have mil-spec markings on the insert (a "snail-trail" designating the numerical path). Commercial versions will have insert markings as shown here.

CONTACT LEGEND ○ 20 ● 16 ◒ 12

Front face of pin insert or rear face of socket insert illustrated

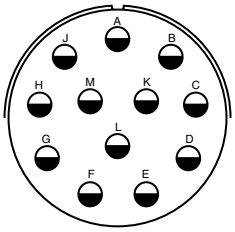
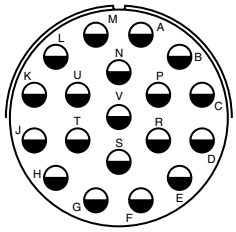
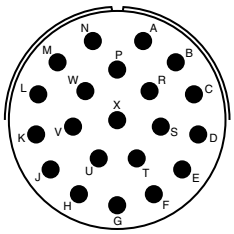
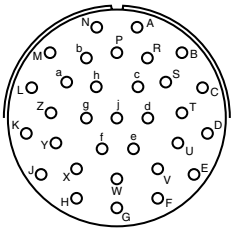

Insert Arrangement	22-12	22-19	22-21	22-32
Service Rating	I	I	II	I
Number of Contacts	12	19	21	32
Contact Size	12	12	16	20

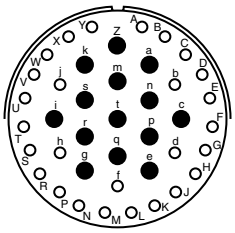
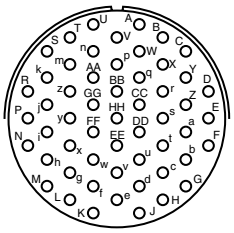
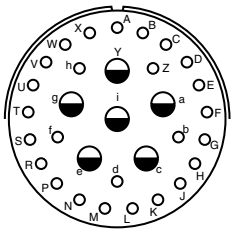
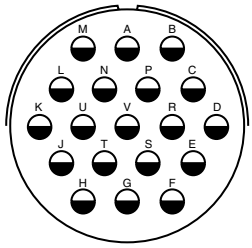

Insert Arrangement	22-41		22-55	22-95		24-19
Service Rating	I		I	I		II
Number of Contacts	27	14	55	26	6	19
Contact Size	20	16	20	20	12	12

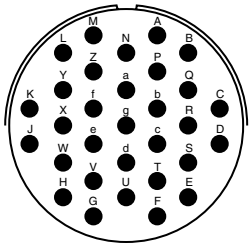
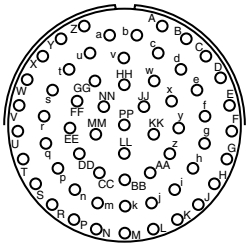

Insert Arrangement	24-31	24-61
Service Rating	I	I
Number of Contacts	31	61
Contact Size	16	20

NOTE: Connectors sold as mil-spec connectors will have mil-spec markings on the insert (a "snail-trail" designating the numerical path). Commercial versions will have insert markings as shown here.

CONTACT LEGEND ○ 20 ● 16 ◒ 12

CLASS DESCRIPTIONS

Military MIL-DTL-26482, Series 2	Amphenol/Matrix Commercial MB1 Series	Description
Class L	Class R	Aluminum shell, electroless nickel finish, fluid resistant
Class E	–	Inactive, superceded by Class L*
Class R	–	Inactive, superceded by Class L*
Class A	Class A	Aluminum shell, black non-conductive anodized finish, fluid resistant
–	Class G	Stainless steel shell, passivated, fluid resistant
Class W	Class W	Aluminum shell, olive drab cadmium plated, corrosion/fluid resistant

* Ref. MIL-DTL-26482

PERFORMANCE SPECIFICATIONS

SERVICE RATINGS**

Service Rating	Recommended Operating AC Voltage at Sea Level	Test Voltage AC (RMS), 60 cps			
		Sea Level	50,000 ft.	70,000 ft.	110,000 ft.
I	600	1,500	500	375	200
II	1,000	2,300	750	500	200

** Service Rating is comparable to MS rating A. Miniature connectors rated Service Rating I will provide a minimum flashover voltage at sea level of 2,000 volts AC (RMS). Service Rating II is comparable to MS Service Rating D, and will provide a minimum flashover voltage of 2,800 volts AC (RMS) at sea level.

Please note that the electrical data given is not an establishment of electrical safety factors. This is left entirely in the designer's hands, as he can best determine which peak voltage, switching surges, transients, etc. can be expected in a particular circuit.

OPERATING TEMPERATURE RANGE

–65°C (–85°F) to 200°C (392°F)

ENVIRONMENTAL SEAL
Wired, mated connectors with the specified accessory attached will meet the altitude immersion test specified in MIL-DTL-26482.

DURABILITY
Minimum of 500 mating cycles.

SHOCK AND VIBRATION REQUIREMENTS
When tested as follows, the connector shall sustain no physical damage, or electrical discontinuity exceeding one microsecond.

SHOCK:
Pulse of an approximate half sine wave of 300g magnitude with duration of 3 milliseconds applied in three axes.

VIBRATION:
Sixteen hours of random vibration having a range of 50 to 2,000 Hz with a 41.7G peak level.

1. MIL-DTL-26482, Series 2	2. Connector Type	3. Connector Style	4. Service Class	5. Shell Size/Insert Arrangement	6. Contact Type	7. Alternate Rotation of Insert	Modification Number
MILITARY	MS	3470	W	12-10	P	W	NA
COMMERCIAL	MB1	0	W	12-10	P	W	(xxx)

Step 1. Military Connector Type

MS	Designates Military Standard

Step 2. Select a Connector Style

	Designates
3470	Wall Mount Receptacle with Narrow Flange
3472	Wall Mount Receptacle with Wide Flange
3471	Cable Connecting Receptacle
3474	Jam Nut Receptacle
3476	Straight Plug
3475	Straight Plug with RFI Grounding Fingers

Step 3. Select a Service Class

	Designates
L	Aluminum shell, electroless nickel finish, fluid resistant insert
A	Aluminum shell, black anodized finish, non-conductive fluid resistant insert
W	Aluminum shell, olive drab cadmium plated, fluid resistant insert

Note: For stainless steel shell, passivated, order by Amphenol®/Matrix® commercial Class G.
Class L inactivates classes E and R (Ref. MIL-DTL-26482)

Step 4. Select a Shell Size & Insert Arrangement from chart on page 334.

First number represents Shell Size, second number is the Insert Arrangement.

Step 5. Select a Contact Type

	Designates
P	Pin Contacts
S	Socket Contacts
A	Less Pins
B	Less Sockets

Use A & B only when other than a full complement of power contacts is to be installed.

Step 6. Select an Alternate Rotation of Insert

"W", "X", "Y", "Z" designate that insert is rotated in its shell from normal position. No letter required for normal (no rotation) position. See page 334 for description of alternate positions.

For ordering information on accessories, such as protection caps and backshell hardware, contact Amphenol Aerospace.

Step 1. Commercial Connector Type

MB1	Designates Amphenol®/Matrix® Bayonet Coupling Connector

Step 2. Select a Connector Style

	Designates
0	Wall Mount Receptacle with Narrow Flange
1	Wall Mount Receptacle with Wide Flange
3	Cable Connecting Receptacle
4	Jam Nut Receptacle
6	Straight Plug
8	Straight Plug with RFI Grounding Fingers

Step 3. Select a Service Class

	Designates
A	Aluminum shell, black anodized finish, non-conductive, fluid resistant insert
B	Black zinc conductive plating. Must also add modification number (A15) in step 7
C	Green zinc cobalt plating. Must also add modification number (981) in step 7
R	Aluminum shell, electroless nickel finish, fluid resistant insert
G	Stainless steel shell, passivated, fluid resistant insert
W	Aluminum shell, cadmium plated, olive drab finish, fluid resistant insert
DZ	Black Zinc Nickel
DT	Durmalon

Step 4. Select a Shell Size & Insert Arrangement from chart on page 334.

First number represents Shell Size, second number is the Insert Arrangement.

Step 5. Select a Contact Type

	Designates
P	Pin Contacts
S	Socket Contacts

Step 6. Select an Alternate Rotation of Insert

"W", "X", "Y", "Z" designate that insert is rotated in its shell from normal position. No letter required for normal (no rotation) position. See page 334 for description of alternate positions.

Step 7. Modification Number

Consult Amphenol Aerospace for information.
For strain reliefs use the following codes:
(189) E-nut M85049/31 configuration
(190) Straight strain relief M85049/52 configuration
(191) 90° strain relief M85049/51 configuration
(A15) Used with finish class B to designate conductive black zinc plating.
(981) Used with finish class C to designate green zinc cobalt plating.

MS3470 (MB10) – MIL-DTL-26482, Series 2

Wall Mounting Receptacle (with Narrow Flange)

PART #

***To complete, see how to order page 338.**

	Connector Type	Shell Style		Shell Size & Insert Arrg	Contact Type	Alternate Rotation of Insert	Modification Number
Military	**MS**	**3470**	X	X-X	X	X	NA
Commercial	**MB1**	**0**	X	X-X	X	X	(XXX)

MS3470
MB10

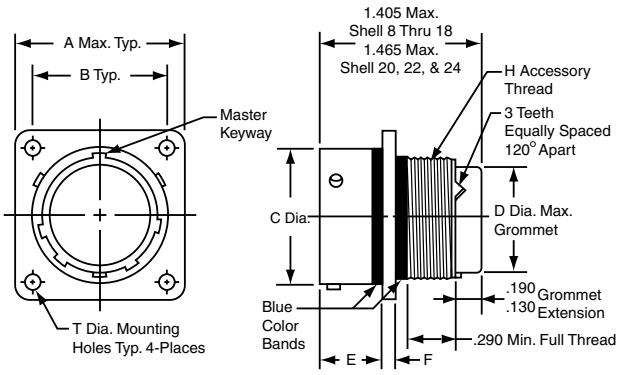

Shell Size	A Max.	B ±.005	C Dia. ±.003	D Dia. Max.	E	F ±.016	H Accessory Thread Class 2A	T Dia. ±.005
8	.828	.594	.471	.305	.462/.431	.062	.5000-20 UNF	.120
10	.954	.719	.588	.405	.462/.431	.062	.6250-24 UNEF	.120
12	1.047	.812	.748	.531	.462/.431	.062	.7500-20 UNEF	.120
14	1.141	.906	.873	.665	.462/.431	.062	.8750-20 UNEF	.120
16	1.234	.969	.998	.790	.462/.431	.062	1.0000-20 UNEF	.120
18	1.328	1.062	1.123	.869	.462/.431	.062	1.0625-18 UNEF	.120
20	1.453	1.156	1.248	.994	.587/.556	.094	1.1875-18 UNEF	.120
22	1.578	1.250	1.373	1.119	.587/.556	.094	1.3125-18 UNEF	.120
24	1.703	1.375	1.498	1.244	.620/.589	.094	1.4375-18 UNEF	.147

All dimensions for reference only.

MS3472 (MB11) – MIL-DTL-26482, Series 2

Wall Mounting Receptacle (with Wide Flange)

PART #

***To complete, see how to order page 338.**

	Connector Type	Shell Style	Service Class	Shell Size & Insert Arrg	Contact Type	Alternate Rotation of Insert	Modification Number
Military	**MS**	**3472**	X	X-X	X	X	NA
Commercial	**MB1**	**1**	X	X-X	X	X	(XXX)

MS3472
MB11

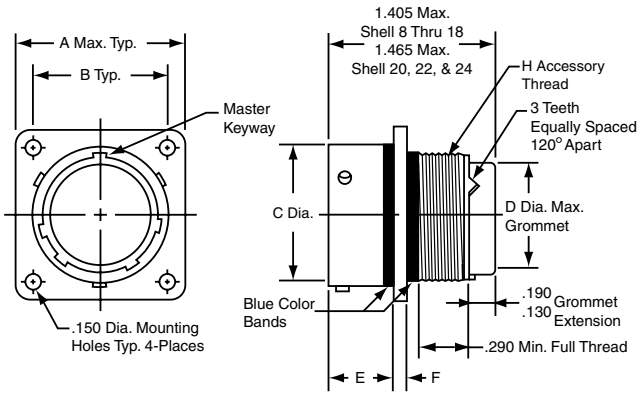

Shell Size	A Max.	B ±.005	C Dia. ±.003	D Dia. Max.	E	F ±.016	H Accessory Thread Class 2A
8	1.065	.734	.471	.305	.493/.462	.062	.5000-20 UNF
10	1.141	.812	.588	.405	.493/.462	.062	.6250-24 UNEF
12	1.266	.938	.748	.531	.493/.462	.062	.7500-20 UNEF
14	1.360	1.031	.873	.665	.493/.462	.062	.8750-20 UNEF
16	1.453	1.125	.998	.790	.493/.462	.062	1.0000-20 UNEF
18	1.532	1.203	1.123	.869	.493/.462	.062	1.0625-18 UNEF
20	1.688	1.297	1.248	.994	.587/.556	.094	1.1875-18 UNEF
22	1.766	1.375	1.373	1.119	.587/.556	.094	1.3125-18 UNEF
24	1.891	1.500	1.498	1.244	.620/.589	.094	1.4375-18 UNEF

All dimensions for reference only.

MS3471 (MB13) – MIL-DTL-26482, Series 2

Cable Connecting Receptacle

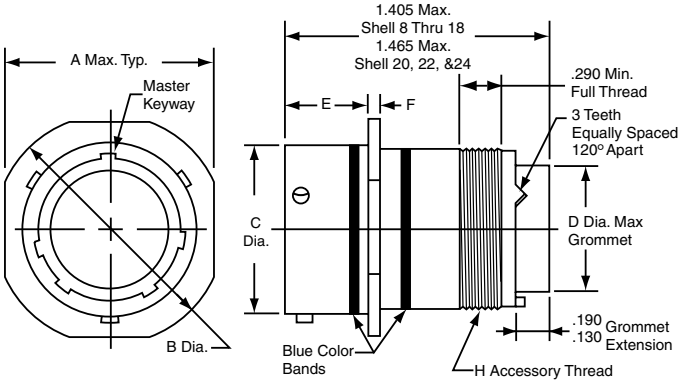

PART #

*To complete, see how to order page 338.

	Connector Type	Shell Style	Service Class	Shell Size & Insert Arrg	Contact Type	Alternate Rotation of Insert	Modification Number
Military	MS	3471	X	X-X	X	X	NA
Commercial	MB1	3	X	X-X	X	X	(XXX)

MS3471
MB13

Shell Size	A Max.	B Dia. ±.020	C Dia. ±.003	D Dia. Max.	E	F ±.016	H Accessory Thread Class 2A
8	.828	.938	.471	.305	.462/.431	.062	.5000-20 UNF
10	.954	1.062	.588	.405	.462/.431	.062	.6250-24 UNEF
12	1.047	1.156	.748	.531	.462/.431	.062	.7500-20 UNEF
14	1.141	1.250	.873	.665	.462/.431	.062	.8750-20 UNEF
16	1.234	1.344	.998	.790	.462/.431	.062	1.0000-20 UNEF
18	1.328	1.438	1.123	.869	.462/.431	.062	1.0625-18 UNEF
20	1.453	1.562	1.248	.994	.587/.556	.094	1.1875-18 UNEF
22	1.578	1.688	1.373	1.119	.587/.556	.094	1.3125-18 UNEF
24	1.703	1.812	1.498	1.244	.620/.589	.094	1.4375-18 UNEF

All dimensions for reference only.

MS3474 (MB14) – MIL-DTL-26482, Series 2

Jam Nut Receptacle

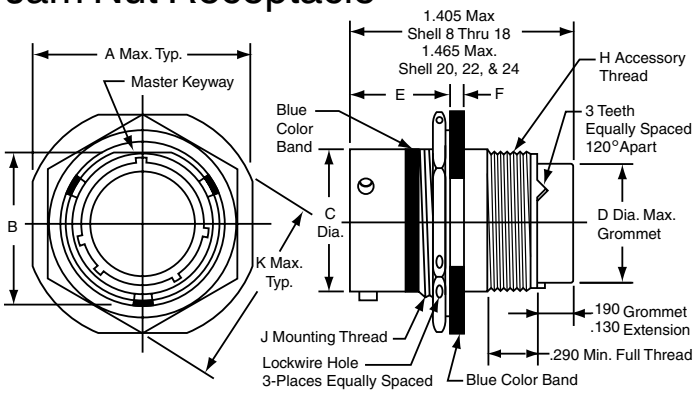

PART #

*To complete, see how to order page 338.

	Connector Type	Shell Style	Service Class	Shell Size & Insert Arrg	Contact Type	Alternate Rotation of Insert	Modification Number
Military	MS	3474	X	X-X	X	X	NA
Commercial	MB1	4	X	X-X	X	X	(XXX)

MS3474
MB14

Shell Size	A Max.	B ±.005	C Dia. ±.003	D Dia. Max.	E	F	H Accessory Thread Class 2A	J Mounting Thread Class 2A	K Max.
8	.954	.525	.471	.305	.707/.658	.113/.086	.5000-20 UNF	.5625-24 UNEF	.767
10	1.078	.650	.588	.405	.707/.658	.113/.086	.6250-24 UNF	.6875-24 UNEF	.892
12	1.266	.813	.748	.531	.707/.658	.113/.086	.7500-20 UNEF	.8750-20 UNEF	1.079
14	1.391	.937	.873	.665	.707/.658	.113/.086	.8750-20 UNEF	1.0000-20 UNEF	1.205
16	1.516	1.061	.998	.790	.707/.658	.113/.086	1.0000-20 UNEF	1.1250-18 UNEF	1.329
18	1.641	1.186	1.123	.869	.707/.658	.113/.086	1.0625-18 UNEF	1.2500-18 UNEF	1.455
20	1.828	1.311	1.248	.994	.772/.721	.148/.096	1.1875-18 UNEF	1.3750-18 UNEF	1.579
22	1.954	1.436	1.373	1.119	.772/.721	.148/.096	1.3125-18 UNEF	1.5000-18 UNEF	1.705
24	2.078	1.561	1.498	1.244	.772/.721	.148/.096	1.4375-18 UNEF	1.6250-18 UNEF	1.829

All dimensions for reference only.

Amphenol Aerospace

PART

***To complete, see how to order page 338.**

	Connector Type	Shell Style	Service Class	Shell Size & Insert Arrg	Contact Type	Alternate Rotation of Insert	Modification Number
Military	**MS**	**3476**	X	X-X	X	X	NA
Commercial	**MB1**	**6**	X	X-X	X	X	(XXX)

MS3476
MB16

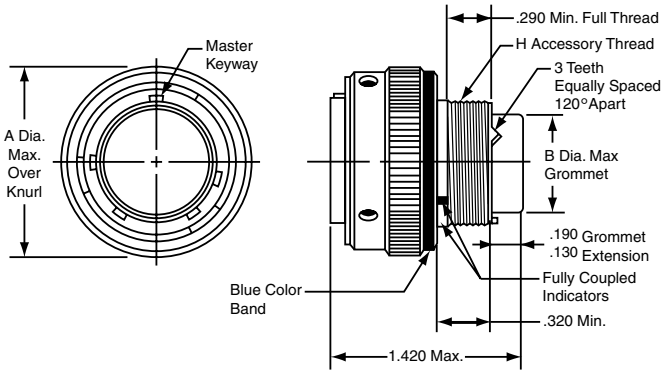

Shell Size	A Dia. Max.	B Dia. Max.	H Accessory Thread Class 2A
8	.782	.305	.5000-20 UNF
10	.926	.405	.6250-24 UNEF
12	1.043	.531	.7500-20 UNEF
14	1.183	.665	.8750-20 UNEF
16	1.305	.790	1.0000-20 UNEF
18	1.391	.869	1.0625-18 UNEF
20	1.531	.994	1.1875-18 UNEF
22	1.656	1.119	1.3125-18 UNEF
24	1.777	1.244	1.4375-18 UNEF

All dimensions for reference only.

MS3475 (MB18) – MIL-DTL-26482, Series 2

Straight Plug (With RFI Grounding Fingers)

PART

***To complete, see how to order page 338.**

	Connector Type	Shell Style	Service Class	Shell Size & Insert Arrg	Contact Type	Alternate Rotation of Insert	Modification Number
Military	**MS**	**3475**	X	X-X	X	X	NA
Commercial	**MB1**	**8**	X	X-X	X	X	(XXX)

MS3475
MB18

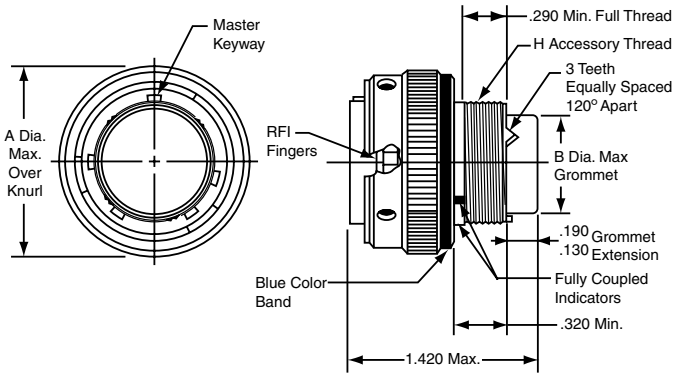

Shell Size	A Dia. Max.	B Dia. Max.	H Accessory Thread Class 2A
8	.782	.305	.5000-20 UNF
10	.926	.405	.6250-24 UNEF
12	1.043	.531	.7500-20 UNEF
14	1.183	.665	.8750-20 UNEF
16	1.305	.790	1.0000-20 UNEF
18	1.391	.869	1.0625-18 UNEF
20	1.531	.994	1.1875-18 UNEF
22	1.656	1.119	1.3125-18 UNEF
24	1.777	1.244	1.4375-18 UNEF

All dimensions for reference only.

MIL-DTL-26482, SERIES 2 CRIMP CONTACTS

Contact Size	Wire Range		Socket Contacts		Pin Contacts	
	AWG	mm2	Military Part Number	Amphenol/Matrix Part Number	Military Part Number	Amphenol/Matrix Part Number
20	24-20	0.2-0.6	M39029/5-115	M5100-001-0020L	M39029/4-110	M5000-054-0020L
16	20-16	0.5-1.4	M39029/5-116	M5100-001-0016L	M39029/4-111	M5000-054-0016L
12	14-12	2-3	M39029/5-118	M5100-001-0012L	M39029/4-113	M5000-054-0012L

CONTACT CURRENT RATING AND RETENTION

Contact Size*	DC Test Amperage	Contact Retention	
		Axial Load	
		lb.	N
20	7.5	20	89.0
16	13.0	25	111.2
12	23.0	30	133.4

* Organize individual circuits to maintain heat rise within operating temperature requirements.

SEALING PLUGS

Contact Size	Sealing Plugs	
	Military Part Number	Amphenol/Matrix Part Number
20	MS27488-20-2	10-405996-202
16	MS27488-16-2	10-405996-162
12	MS27488-12-2	10-405996-122

CRIMPING TOOLS

Contact Size	Wire Range		Finished Wire Dia. Range		Crimping Tool Part Number	Turret or Positioner Part Number
	AWG	mm²	Inch	mm		
20	24-20	0.2-0.6	.040-.083	1.02-2.11	M22520/1-01 or M22520/2-01	M22520/1-02 or M22520/2-02
16	20-16	0.5-1.4	.053-.103	1.34-2.62	M22520/1-01	M22520/1-02
12	14-12	2-3	.097-.158	2.46-4.01	M22520/1-01	M22520/1-02

INSERTION/REMOVAL TOOLS

Contact Size	Color Code	Military Part Number	Amphenol/Matrix Part Number
20	Red/White	M81969/14-11	10-538988-201
16	Blue/White	M81969/14-03	10-538988-016
12	Yellow/White	M81969/14-04	10-538988-012

Note: Each connector is furnished with contacts. One spare for inserts requiring 1 to 26 of each contact, two spares for inserts with more than 26 contacts, and a minimum of one sealing plug up to 15% of the number of contacts.

BACKSHELLS

The section of this catalog called "Backshells" covers the backshells for MIL-DTL-26482 that are provided through Amphenol PCD. Please refer to this section for:

- Backshells for Connector Family "J", which includes MIL-DTL-26482 (Series II), MIL-DTL-5015 (MS3400), MIL-DTL-83723 (Series I & III).

Wire Stripping

1. Strip wire to required length. (See Figure at right). When using hot wire stripping do not wipe melted insulation material on wire strands; with mechanical strippers do not cut or nick strands.
2. See Table 1 for proper finished outside wire dimensions.
3. Twist strands together to form a firm bundle.
4. Insert stripped wire into contact applying slight pressure until wire insulation butts against wire well. Check inspection hole to see that wire strands are visible. If there are strayed wire strands, entire wire end should be re-twisted.

When wire is stripped and properly installed into contact, the next step is to crimp the wire inside the contact by using the proper crimping tool.

Stripping Dimensions

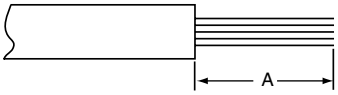

Wire Size	A
20	.188 (4.77)
16	.188 (4.77)
12	.188 (4.77)

Table 1

Contact Size	Wire Dimension (inches)**	
	Min.	Max.
12	.040	.083
16	.053	.103
20	.097	.153

** Min. diameters to ensure moisture proof assembly; max. diameters to permit use of metal removal tools.

Crimping

See table on preceding page for recommended M22520 series crimping tools, turret head or positioner selection settings according to contact size, part number and wire gauge size.

1. Insert stripped wire into contact crimp pot. Wire must be visible through inspection hole.
2. Using correct crimp tool and locator, cycle the tool once to be sure the indentors are open, insert contact and wire into locator. Squeeze tool handles firmly and completely to insure a proper crimp. The tool will not release unless the crimp indentors in the tool head have been fully actuated.
3. Release crimped contact and wire from tool. Be certain the wire is visible through inspection hole in contact.

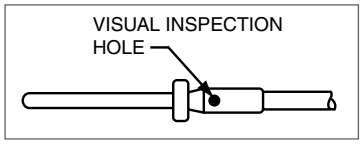

Example M22520 Series Crimping Tool for size 20, 16 or 12 contacts, and has a positioner that can be dialed for each contact size.

Contact Insertion

1. First remove hardware from the plug and receptacle and slide the hardware over wires in proper sequence.

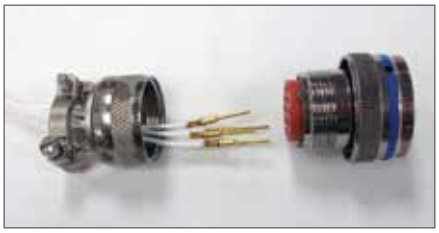

Note: All plastic tools are double-ended. The colored side is the insertion tool and the white side is the removal tool.

2. Use proper plastic or metal insertion tool for corresponding contact. (Consult tool table on preceding page). Slide correct tool (with plastic tool use colored end) over wire insulation and slide forward until tool bottoms against rear contact shoulder.

Plastic tool with contact in proper position.

Metal tool with contact.

3. Next align the tool and contact up to the properly identified cavity at rear of connector plug. Use firm, even pressure; do not use excessive pressure. It is recommended to start at the center cavity. Contact must be aligned with grommet hole and not inserted at an angle. Push forward until contact is felt to snap into position within insert.

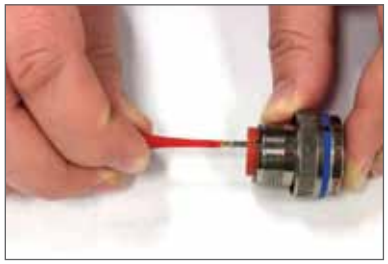

Continued on next page.

Contact Insertion, cont.

4. Remove tool and pull back lightly on wire, making sure contact stays properly seated and isn't dragged back with the tool. Repeat operation with remainder of contacts to be inserted, beginning with the center cavity and working outward in alternating rows.

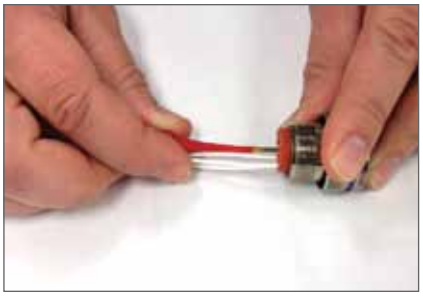

5. After all contacts are inserted, fill any empty cavities with wire sealing plugs. (Refer to sealing plug charts for Series III on page 18, for Series I, II, and SJT on page 19.

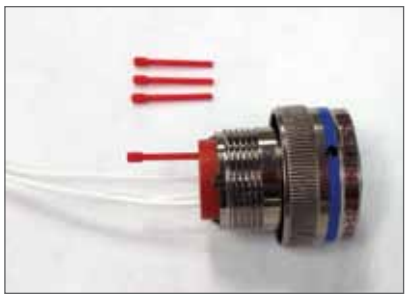

6. Reassemble plug or receptacle hardware - slide forward and tighten using connector pliers. Connector holding tools are recommended while tightening back accessories. When using strain relief, center wires at bar clamp. Slide clamp grommet into position and tighten clamp bar screws. When tightening screws, pressure should be applied in the same direction that clamp is threaded to rear threads of connector. When not using clamp grommet, build up wire bundle with vinyl tape so clamp bar will maintain pressure on wires.

CAUTION when inserting or removing contacts, do not spread or rotate tool tips.

Contact Removal

1. Remove hardware from plug or receptacle and slide hardware back along wire bundle.

2. Use proper plastic or metal removal tool for corresponding contact. (Consult tool table on page 277). Slide correct size tool over wire insulation.

Use white end of plastic tool for removal of contacts.

3. Insert plastic or metal removal tool into contact cavity until tool tips enter rear grommet and come to a positive stop. Hold tool tip firmly against positive stop on contact shoulder. Grip wire and simultaneously remove tool and contact. (On occasion, it may be necessary to remove tool, rotate 90° and reinsert.)

Removal of contacts with metal tool.

MIL-DTL-26482, Series 1 Connectors

There are several additional connector types within the Amphenol® MIL-DTL-26482 family. MIL-Spec and commercial versions are available with varying design characteristics and customer options to meet cost considerations and to provide users with the most design flexibility possible.

MIL-DTL-26482, Series 1 Circular connectors are shown in detail in Amphenol Industrial Operations' catalog 12-070, which can be supplied upon request or visit www.amphenol-industrial.com.

Briefly the MIL-DTL-26482 Series 1 circulars are described as follows:

PT, SP, MS/PT
Commercial/MIL-DTL-26482, Series 1

These are bayonet type with solder contacts. Both the insert and main joint gasket are molded from resilient neoprene. This provides excellent moisture sealing at the gasket and superior electrical isolation of the contact in the inserts.

Socket contacts are closed entry design. Printed circuit board contacts are also available in this series.

The SP is a modification of the PT providing special shells with a wide mounting flange for back panel mounting. The SP also has a durable non-conductive hard anodic "Alumilite" coating which provides abrasion and corrosion protection.

There are 8 shell styles in the PT, SP and MS/PT series, and shell sizes are 6-24. The PT solder is UL recognized. Hermetics are also available.

PT-SE, SP-SE, MS/PT-SE
Commercial/MIL-DTL-26482, Series 1

These are a derivative of the PT line, bayonet type. However, they incorporate crimp contacts that are rear insertable, front releasable. An MS approved spring tower retention system holds the contacts in place.

PT-CE, SP-CE
Commercial crimp type

Another derivative of the PT line, bayonet type. These also have crimp contacts that are rear insertable, front releasable, but the contacts are held in place by a nylon wafer retention system. The voidless one-piece insert and grommet assembly provide continuous dielectric separation between contacts.

PC, PC-SE, PC-CE
Commercial solder and crimp type

The PC series within the Amphenol® miniature circular family is threaded coupling, rather than bayonet coupling. The threads are double-stubbed so they can not be cross threaded.

The PC is offered with solder contacts. The PC-SE has crimp contacts in a spring tower retention system, while the PC-CE has crimp contacts in a nylon wafer retention system. Hermetics are available

All miniature circular are intermateable and intermountable with each other except for the threaded coupling PC Series.

For further information ask for catalog 12-070. Consult Amphenol Industrial Operations, Sidney, NY for any assistance on these products or for any specific application needs. See catalog 12-070 online at www.amphenol-industrial.com

OCEAN CHIPS
Океан Электроники
Поставка электронных компонентов

Компания «Океан Электроники» предлагает заключение долгосрочных отношений при поставках импортных электронных компонентов на взаимовыгодных условиях!

Наши преимущества:

- Поставка оригинальных импортных электронных компонентов напрямую с производств Америки, Европы и Азии, а так же с крупнейших складов мира;
- Широкая линейка поставок активных и пассивных импортных электронных компонентов (более 30 млн. наименований);
- Поставка сложных, дефицитных, либо снятых с производства позиций;
- Оперативные сроки поставки под заказ (от 5 рабочих дней);
- Экспресс доставка в любую точку России;
- Помощь Конструкторского Отдела и консультации квалифицированных инженеров;
- Техническая поддержка проекта, помощь в подборе аналогов, поставка прототипов;
- Поставка электронных компонентов под контролем ВП;
- Система менеджмента качества сертифицирована по Международному стандарту ISO 9001;
- При необходимости вся продукция военного и аэрокосмического назначения проходит испытания и сертификацию в лаборатории (по согласованию с заказчиком);
- Поставка специализированных компонентов военного и аэрокосмического уровня качества (Xilinx, Altera, Analog Devices, Intersil, Interpoint, Microsemi, Actel, Aeroflex, Peregrine, VPT, Syfer, Eurofarad, Texas Instruments, MS Kennedy, Miteq, Cobham, E2V, MA-COM, Hittite, Mini-Circuits, General Dynamics и др.);

Компания «Океан Электроники» является официальным дистрибьютором и эксклюзивным представителем в России одного из крупнейших производителей разъемов военного и аэрокосмического назначения **«JONHON»**, а так же официальным дистрибьютором и эксклюзивным представителем в России производителя высокотехнологичных и надежных решений для передачи СВЧ сигналов **«FORSTAR»**.

AVIC JONHON

«JONHON» (основан в 1970 г.)

Разъемы специального, военного и аэрокосмического назначения:

(Применяются в военной, авиационной, аэрокосмической, морской, железнодорожной, горно- и нефтедобывающей отраслях промышленности)

«FORSTAR» (основан в 1998 г.)

ВЧ соединители, коаксиальные кабели, кабельные сборки и микроволновые компоненты:

(Применяются в телекоммуникациях гражданского и специального назначения, в средствах связи, РЛС, а так же военной, авиационной и аэрокосмической отраслях промышленности).

FORSTAR®

Телефон: 8 (812) 309-75-97 (многоканальный)
Факс: 8 (812) 320-03-32
Электронная почта: ocean@oceanchips.ru
Web: http://oceanchips.ru/
Адрес: 198099, г. Санкт-Петербург, ул. Калинина, д. 2, корп. 4, лит. А