# HIGH-SPEED 3.3V 256K x 36 SYNCHRONOUS BANK-SWITCHABLE DUAL-PORT STATIC RAM WITH 3.3V OR 2.5V INTERFACE

***IDT70V7519S***

LEAD FINISH (SnPb) ARE IN EOL PROCESS - LAST TIME BUY EXPIRES JUNE 15, 2018

## Features:

- **256K x 36 Synchronous Bank-Switchable Dual-ported SRAM Architecture**
  - ***64 independent 4K x 36 banks***
  - ***9 megabits of memory on chip***
- **Bank access controlled via bank address pins**
- **High-speed data access**
  - *Commercial: 3.4ns(200MHz)/3.6ns (166MHz)/4.2ns (133MHz) (max.)*
  - *Industrial: 3.6ns (166MHz)/4.2ns (133MHz) (max.)*
- **Selectable Pipelined or Flow-Through output mode**
- **Counter enable and repeat features**
- **Dual chip enables allow for depth expansion without additional logic**
- **Full synchronous operation on both ports**
  - *5ns cycle time, 200MHz operation (14Gbps bandwidth)*
  - *Fast 3.4ns clock to data out*
  - *1.5ns setup to clock and 0.5ns hold on all control, data, and address inputs @ 200MHz*
  - *Data input, address, byte enable and control registers*
  - *Self-timed write allows fast cycle time*
- **Separate byte controls for multiplexed bus and bus matching compatibility**
- **LVTTL- compatible, 3.3V (±150mV) power supply for core**
- **LVTTL compatible, selectable 3.3V (±150mV) or 2.5V (±100mV) power supply for I/Os and control signals on each port**
- **Industrial temperature range (-40°C to +85°C) is available at 166MHz and 133MHz**
- **Available in a 208-pin Plastic Quad Flatpack (PQFP), 208-pin fine pitch Ball Grid Array (fpBGA), and 256-pin Ball Grid Array (BGA)**
- **Supports JTAG features compliant with IEEE 1149.1**
- **Green parts available, see ordering information**

## Functional Block Diagram

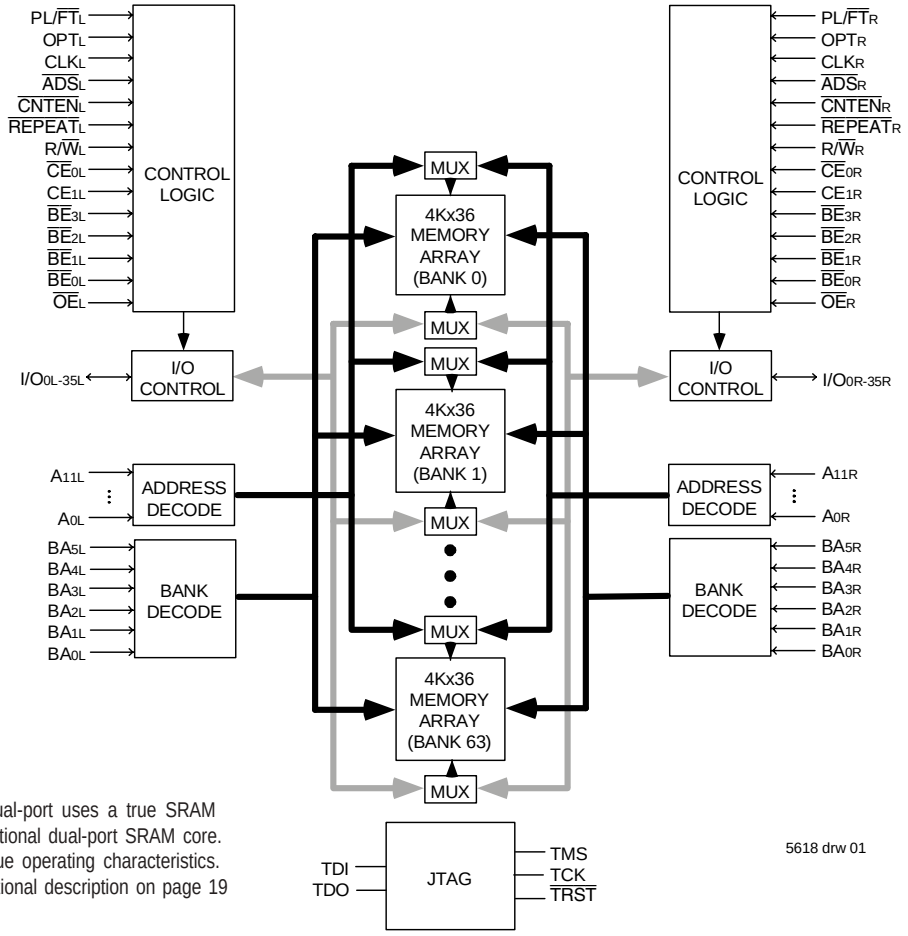


5618 drw 01

**NOTE:**

1. The Bank-Switchable dual-port uses a true SRAM core instead of the traditional dual-port SRAM core. As a result, it has unique operating characteristics. Please refer to the functional description on page 19 for details.

JUNE 2015



©2015 Integrated Device Technology, Inc.

DSC 5618/9

## Description:

The IDT70V7519 is a high-speed 256Kx36 (9Mbit) synchronous Bank-Switchable Dual-Ported SRAM organized into 64 independent 4Kx36 banks. The device has two independent ports with separate control, address, and I/O pins for each port, allowing each port to access any 4Kx36 memory block not already accessed by the other port. Accesses by the ports into specific banks are controlled via the bank address pins under the user's direct control.

Registers on control, data, and address inputs provide minimal setup and hold times. The timing latitude provided by this approach allows systems to be designed with very short cycle times. With an input data register, the IDT70V7519 has been optimized for applications having unidirectional or bidirectional data flow in bursts. An automatic power down feature, controlled by $CE_0$ and $CE_1$, permits the on-chip circuitry of each port to enter a very low standby power mode. The dual chip enables also facilitate depth expansion.

The 70V7519 can support an operating voltage of either 3.3V or 2.5V on one or both ports, controllable by the OPT pins. The power supply for the core of the device($V_{DD}$) remains at 3.3V. Please refer also to the functional description on page 19.

## Pin Configuration(1,2,3,4)

| | | | | | | | | | | | | | | | | |
|---|---|---|---|---|---|---|---|---|---|---|---|---|---|---|---|---|
| A1 IO19L | A2 IO18L | A3 VSS | A4 TDO | A5 NC | A6 BA4L | A7 BA0L | A8 A8L | A9 $\overline{BE}_{1L}$ | A10 VDD | A11 CLKL | A12 $\overline{CNTEN}_L$ | A13 A4L | A14 A0L | A15 OPTL | A16 I/O17L | A17 VSS |
| B1 I/O20R | B2 VSS | B3 I/O18R | B4 TDI | B5 BA5L | B6 BA1L | B7 A9L | B8 $\overline{BE}_{2L}$ | B9 $\overline{CE}_{0L}$ | B10 VSS | B11 $\overline{ADS}_L$ | B12 A5L | B13 A1L | B14 VSS | B15 VDDQR | B16 I/O16L | B17 I/O15R |
| C1 VDDQL | C2 I/O19R | C3 VDDQR | C4 PL/$\overline{FT}_L$ | C5 NC | C6 BA2L | C7 A10L | C8 $\overline{BE}_{3L}$ | C9 CE1L | C10 VSS | C11 R/$\overline{W}_L$ | C12 A6L | C13 A2L | C14 VDD | C15 I/O16R | C16 I/O15L | C17 VSS |
| D1 I/O22L | D2 VSS | D3 I/O21L | D4 I/O20L | D5 BA3L | D6 A11L | D7 A7L | D8 $\overline{BE}_{0L}$ | D9 VDD | D10 $\overline{OE}_L$ | D11 $\overline{REPEAT}_L$ | D12 A3L | D13 VDD | D14 I/O17R | D15 VDDQL | D16 I/O14L | D17 I/O14R |
| E1 I/O23L | E2 I/O22R | E3 VDDQR | E4 I/O21R | | | | | | | | | | E14 I/O12L | E15 I/O13R | E16 VSS | E17 I/O13L |
| F1 VDDQL | F2 I/O23R | F3 I/O24L | F4 VSS | | | | | | | | | | F14 VSS | F15 I/O12R | F16 I/O11L | F17 VDDQR |
| G1 I/O26L | G2 VSS | G3 I/O25L | G4 I/O24R | | | | | | | | | | G14 I/O9L | G15 VDDQL | G16 I/O10L | G17 I/O11R |
| H1 VDD | H2 I/O26R | H3 VDDQR | H4 I/O25R | | | | | | | | | | H14 VDD | H15 IO9R | H16 VSS | H17 I/O10R |
| J1 VDDQL | J2 VDD | J3 VSS | J4 VSS | | | | | | | | | | J14 VSS | J15 VDD | J16 VSS | J17 VDDQR |
| K1 I/O28R | K2 VSS | K3 I/O27R | K4 VSS | | | | | | | | | | K14 I/O7R | K15 VDDQL | K16 I/O8R | K17 VSS |
| L1 I/O29R | L2 I/O28L | L3 VDDQR | L4 I/O27L | | | | | | | | | | L14 I/O6R | L15 I/O7L | L16 VSS | L17 I/O8L |
| M1 VDDQL | M2 I/O29L | M3 I/O30R | M4 VSS | | | | | | | | | | M14 VSS | M15 I/O6L | M16 I/O5R | M17 VDDQR |
| N1 I/O31L | N2 VSS | N3 I/O31R | N4 I/O30L | | | | | | | | | | N14 I/O3R | N15 VDDQL | N16 I/O4R | N17 I/O5L |
| P1 I/O32R | P2 I/O32L | P3 VDDQR | P4 I/O35R | P5 $\overline{TRST}$ | P6 BA4R | P7 BA0R | P8 A8R | P9 $\overline{BE}_{1R}$ | P10 VDD | P11 CLKR | P12 $\overline{CNTEN}_R$ | P13 A4R | P14 I/O2L | P15 I/O3L | P16 VSS | P17 I/O4L |
| R1 VSS | R2 I/O33L | R3 I/O34R | R4 TCK | R5 BA5R | R6 BA1R | R7 A9R | R8 $\overline{BE}_{2R}$ | R9 $\overline{CE}_{0R}$ | R10 VSS | R11 $\overline{ADS}_R$ | R12 A5R | R13 A1R | R14 VSS | R15 VDDQL | R16 I/O1R | R17 VDDQR |
| T1 I/O33R | T2 I/O34L | T3 VDDQL | T4 TMS | T5 NC | T6 BA2R | T7 A10R | T8 $\overline{BE}_{3R}$ | T9 CE1R | T10 VSS | T11 R/$\overline{W}_R$ | T12 A6R | T13 A2R | T14 VSS | T15 I/O0R | T16 VSS | T17 I/O2R |
| U1 VSS | U2 I/O35L | U3 PL/$\overline{FT}_R$ | U4 NC | U5 BA3R | U6 A11R | U7 A7R | U8 $\overline{BE}_{0R}$ | U9 VDD | U10 $\overline{OE}_R$ | U11 REPEATR | U12 A3R | U13 A0R | U14 VDD | U15 OPTR | U16 I/O0L | U17 I/O1L |

70V7519BF
BF208(5)

208-Pin fpBGA
Top View(6)

5618 drw 02c

**NOTES:**

1. All $V_{DD}$ pins must be connected to 3.3V power supply.
2. All $V_{DDQ}$ pins must be connected to appropriate power supply: 3.3V if OPT pin for that port is set to $V_{IH}$ (3.3V), and 2.5V if OPT pin for that port is set to $V_{IL}$ (0V).
3. All $V_{SS}$ pins must be connected to ground supply.
4. Package body is approximately 15mm x 15mm x 1.4mm with 0.8mm ball pitch.
5. This package code is used to reference the package diagram.
6. This text does not indicate orientation of the actual part-marking.

# Pin Configuration[1,2,3,4] (con't.)

70V7519BC
BC256[5]

256-Pin BGA
Top View[6]

| | | | | | | | | | | | | | | | |
|---|---|---|---|---|---|---|---|---|---|---|---|---|---|---|---|
| A1 NC | A2 TDI | A3 NC | A4 $BA_{5L}$ | A5 $BA_{2L}$ | A6 $A_{11L}$ | A7 $A_{8L}$ | A8 $\overline{BE}_{2L}$ | A9 $CE_{1L}$ | A10 $\overline{OE}_L$ | A11 $\overline{CNTEN}_L$ | A12 $A_{5L}$ | A13 $A_{2L}$ | A14 $A_{0L}$ | A15 NC | A16 NC |
| B1 $I/O_{18L}$ | B2 NC | B3 TDO | B4 NC | B5 $BA_{3L}$ | B6 $BA_{0L}$ | B7 $A_{9L}$ | B8 $\overline{BE}_{3L}$ | B9 $\overline{CE}_{0L}$ | B10 $R/\overline{W}_L$ | B11 $\overline{REPEAT}_L$ | B12 $A_{4L}$ | B13 $A_{1L}$ | B14 $V_{DD}$ | B15 $I/O_{17L}$ | B16 NC |
| C1 $I/O_{18R}$ | C2 $I/O_{19L}$ | C3 $V_{SS}$ | C4 $BA_{4L}$ | C5 $BA_{1L}$ | C6 $A_{10L}$ | C7 $A_{7L}$ | C8 $\overline{BE}_{1L}$ | C9 $\overline{BE}_{0L}$ | C10 $CLK_L$ | C11 $\overline{ADS}_L$ | C12 $A_{6L}$ | C13 $A_{3L}$ | C14 $OPT_L$ | C15 $I/O_{17R}$ | C16 $I/O_{16L}$ |
| D1 $I/O_{20R}$ | D2 $I/O_{19R}$ | D3 $I/O_{20L}$ | D4 $PL/\overline{FT}_L$ | D5 $V_{DDQL}$ | D6 $V_{DDQL}$ | D7 $V_{DDQR}$ | D8 $V_{DDQR}$ | D9 $V_{DDQL}$ | D10 $V_{DDQL}$ | D11 $V_{DDQR}$ | D12 $V_{DDQR}$ | D13 $V_{DD}$ | D14 $I/O_{15R}$ | D15 $I/O_{15L}$ | D16 $I/O_{16R}$ |
| E1 $I/O_{21R}$ | E2 $I/O_{21L}$ | E3 $I/O_{22L}$ | E4 $V_{DDQL}$ | E5 $V_{DD}$ | E6 $V_{DD}$ | E7 $V_{SS}$ | E8 $V_{SS}$ | E9 $V_{SS}$ | E10 $V_{SS}$ | E11 $V_{DD}$ | E12 $V_{DD}$ | E13 $V_{DDQR}$ | E14 $I/O_{13L}$ | E15 $I/O_{14L}$ | E16 $I/O_{14R}$ |
| F1 $I/O_{23L}$ | F2 $I/O_{22R}$ | F3 $I/O_{23R}$ | F4 $V_{DDQL}$ | F5 $V_{DD}$ | F6 $V_{SS}$ | F7 $V_{SS}$ | F8 $V_{SS}$ | F9 $V_{SS}$ | F10 $V_{SS}$ | F11 $V_{SS}$ | F12 $V_{DD}$ | F13 $V_{DDQR}$ | F14 $I/O_{12R}$ | F15 $I/O_{13R}$ | F16 $I/O_{12L}$ |
| G1 $I/O_{24R}$ | G2 $I/O_{24L}$ | G3 $I/O_{25L}$ | G4 $V_{DDQR}$ | G5 $V_{SS}$ | G6 $V_{SS}$ | G7 $V_{SS}$ | G8 $V_{SS}$ | G9 $V_{SS}$ | G10 $V_{SS}$ | G11 $V_{SS}$ | G12 $V_{SS}$ | G13 $V_{DDQL}$ | G14 $I/O_{10L}$ | G15 $I/O_{11L}$ | G16 $I/O_{11R}$ |
| H1 $I/O_{26L}$ | H2 $I/O_{25R}$ | H3 $I/O_{26R}$ | H4 $V_{DDQR}$ | H5 $V_{SS}$ | H6 $V_{SS}$ | H7 $V_{SS}$ | H8 $V_{SS}$ | H9 $V_{SS}$ | H10 $V_{SS}$ | H11 $V_{SS}$ | H12 $V_{SS}$ | H13 $V_{DDQL}$ | H14 $I/O_{9R}$ | H15 $IO_{9L}$ | H16 $I/O_{10R}$ |
| J1 $I/O_{27L}$ | J2 $I/O_{28R}$ | J3 $I/O_{27R}$ | J4 $V_{DDQL}$ | J5 $V_{SS}$ | J6 $V_{SS}$ | J7 $V_{SS}$ | J8 $V_{SS}$ | J9 $V_{SS}$ | J10 $V_{SS}$ | J11 $V_{SS}$ | J12 $V_{SS}$ | J13 $V_{DDQR}$ | J14 $I/O_{8R}$ | J15 $I/O_{7R}$ | J16 $I/O_{8L}$ |
| K1 $I/O_{29R}$ | K2 $I/O_{29L}$ | K3 $I/O_{28L}$ | K4 $V_{DDQL}$ | K5 $V_{SS}$ | K6 $V_{SS}$ | K7 $V_{SS}$ | K8 $V_{SS}$ | K9 $V_{SS}$ | K10 $V_{SS}$ | K11 $V_{SS}$ | K12 $V_{SS}$ | K13 $V_{DDQR}$ | K14 $I/O_{6R}$ | K15 $I/O_{6L}$ | K16 $I/O_{7L}$ |
| L1 $I/O_{30L}$ | L2 $I/O_{31R}$ | L3 $I/O_{30R}$ | L4 $V_{DDQR}$ | L5 $V_{DD}$ | L6 $V_{SS}$ | L7 $V_{SS}$ | L8 $V_{SS}$ | L9 $V_{SS}$ | L10 $V_{SS}$ | L11 $V_{SS}$ | L12 $V_{DD}$ | L13 $V_{DDQL}$ | L14 $I/O_{5L}$ | L15 $I/O_{4R}$ | L16 $I/O_{5R}$ |
| M1 $I/O_{32R}$ | M2 $I/O_{32L}$ | M3 $I/O_{31L}$ | M4 $V_{DDQR}$ | M5 $V_{DD}$ | M6 $V_{DD}$ | M7 $V_{SS}$ | M8 $V_{SS}$ | M9 $V_{SS}$ | M10 $V_{SS}$ | M11 $V_{DD}$ | M12 $V_{DD}$ | M13 $V_{DDQL}$ | M14 $I/O_{3R}$ | M15 $I/O_{3L}$ | M16 $I/O_{4L}$ |
| N1 $I/O_{33L}$ | N2 $I/O_{34R}$ | N3 $I/O_{33R}$ | N4 $PL/\overline{FT}_R$ | N5 $V_{DDQR}$ | N6 $V_{DDQR}$ | N7 $V_{DDQL}$ | N8 $V_{DDQL}$ | N9 $V_{DDQR}$ | N10 $V_{DDQR}$ | N11 $V_{DDQL}$ | N12 $V_{DDQL}$ | N13 $V_{DD}$ | N14 $I/O_{2L}$ | N15 $I/O_{1R}$ | N16 $I/O_{2R}$ |
| P1 $I/O_{35R}$ | P2 $I/O_{34L}$ | P3 TMS | P4 $BA_{4R}$ | P5 $BA_{1R}$ | P6 $A_{10R}$ | P7 $A_{7R}$ | P8 $\overline{BE}_{1R}$ | P9 $\overline{BE}_{0R}$ | P10 $CLK_R$ | P11 $\overline{ADS}_R$ | P12 $A_{6R}$ | P13 $A_{3R}$ | P14 $I/O_{0L}$ | P15 $I/O_{0R}$ | P16 $I/O_{1L}$ |
| R1 $I/O_{35L}$ | R2 NC | R3 $\overline{TRST}$ | R4 NC | R5 $BA_{3R}$ | R6 $BA_{0R}$ | R7 $A_{9R}$ | R8 $\overline{BE}_{3R}$ | R9 $\overline{CE}_{0R}$ | R10 $R/\overline{W}_R$ | R11 $\overline{REPEAT}_R$ | R12 $A_{4R}$ | R13 $A_{1R}$ | R14 $OPT_R$ | R15 NC | R16 NC |
| T1 NC | T2 TCK | T3 NC | T4 $BA_{5R}$ | T5 $BA_{2R}$ | T6 $A_{11R}$ | T7 $A_{8R}$ | T8 $\overline{BE}_{2R}$ | T9 $CE_{1R}$ | T10 $\overline{OE}_R$ | T11 $\overline{CNTEN}_R$ | T12 $A_{5R}$ | T13 $A_{2R}$ | T14 $A_{0R}$ | T15 NC | T16 NC |

5618 drw 02d

**NOTES:**
1. All $V_{DD}$ pins must be connected to 3.3V power supply.
2. All $V_{DDQ}$ pins must be connected to appropriate power supply: 3.3V if OPT pin for that port is set to $V_{IH}$ (3.3V), and 2.5V if OPT pin for that port is set to $V_{IL}$ (0V).
3. All $V_{SS}$ pins must be connected to ground supply.
4. Package body is approximately 17mm x 17mm x 1.4mm, with 1.0mm ball-pitch.
5. This package code is used to reference the package diagram.
6. This text does not indicate orientation of the actual part-marking.

# Pin Configuration(1,2,3,4) (con't.)

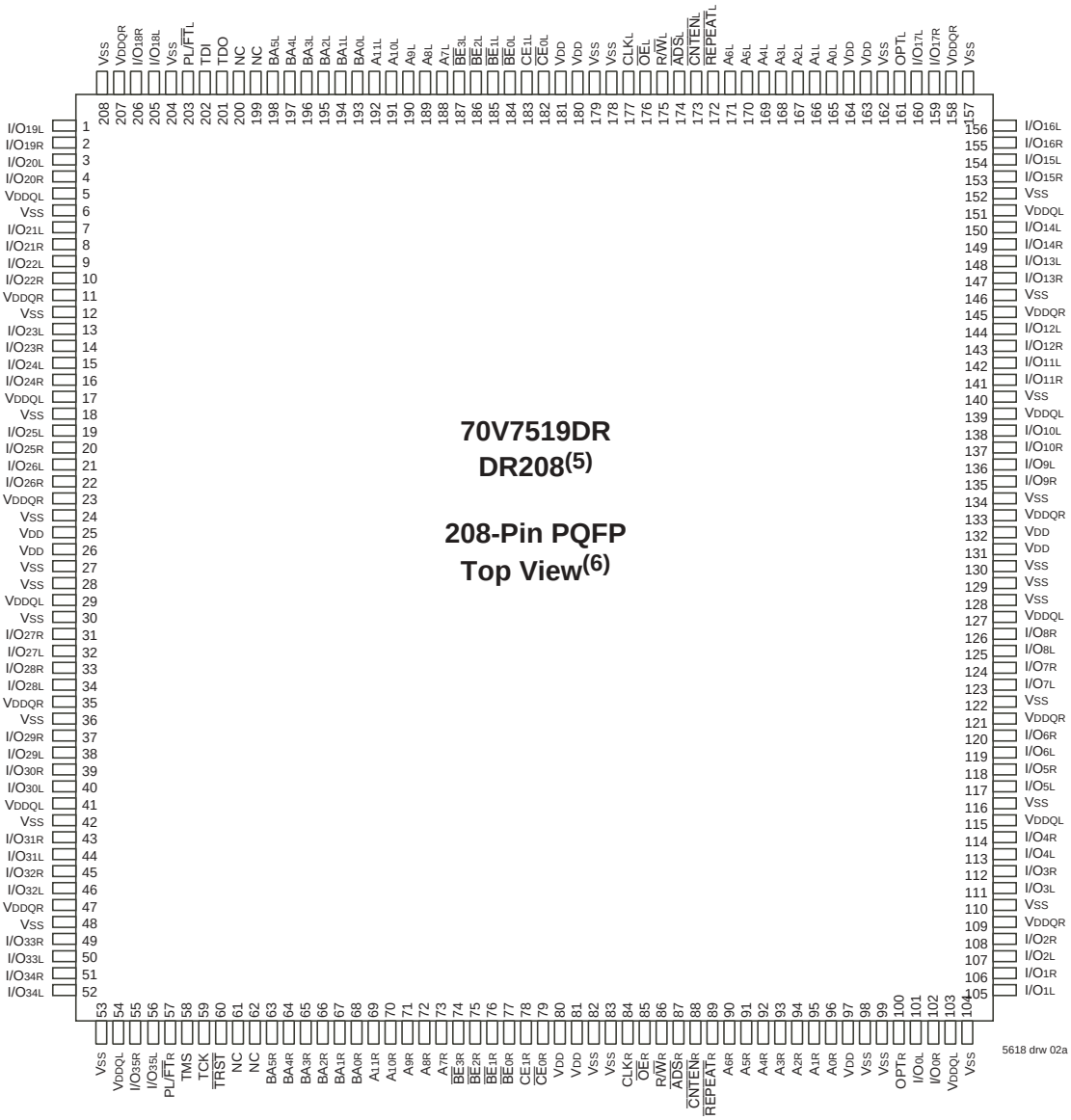


**NOTES:**

1. All $V_{DD}$ pins must be connected to 3.3V power supply.
2. All $V_{DDQ}$ pins must be connected to appropriate power supply: 3.3V if OPT pin for that port is set to $V_{IH}$ (3.3V), and 2.5V if OPT pin for that port is set to $V_{IL}$ (0V).
3. All $V_{SS}$ pins must be connected to ground supply.
4. Package body is approximately 28mm x 28mm x 3.5mm.
5. This package code is used to reference the package diagram.
6. This text does not indicate orientation of the actual part-marking.

## Pin Names

| Left Port | Right Port | Names |
|---|---|---|
| $\overline{CE}_{0L}$, $CE_{1L}$ | $\overline{CE}_{0R}$, $CE_{1R}$ | Chip Enables |
| $R/\overline{W}_L$ | $R/\overline{W}_R$ | Read/Write Enable |
| $\overline{OE}_L$ | $\overline{OE}_R$ | Output Enable |
| $BA_{0L}$ - $BA_{5L}$ | $BA_{0R}$ - $BA_{5R}$ | Bank Address(4) |
| $A_{0L}$ - $A_{11L}$ | $A_{0R}$ - $A_{11R}$ | Address |
| $I/O_{0L}$ - $I/O_{35L}$ | $I/O_{0R}$ - $I/O_{35R}$ | Data Input/Output |
| $CLK_L$ | $CLK_R$ | Clock |
| $PL/\overline{FT}_L$ | $PL/\overline{FT}_R$ | Pipeline/Flow-Through |
| $\overline{ADS}_L$ | $\overline{ADS}_R$ | Address Strobe Enable |
| $\overline{CNTEN}_L$ | $\overline{CNTEN}_R$ | Counter Enable |
| $\overline{REPEAT}_L$ | $\overline{REPEAT}_R$ | Counter Repeat(3) |
| $\overline{BE}_{0L}$ - $\overline{BE}_{3L}$ | $\overline{BE}_{0R}$ - $\overline{BE}_{3R}$ | Byte Enables (9-bit bytes) |
| $V_{DDQL}$ | $V_{DDQR}$ | Power (I/O Bus) (3.3V or 2.5V)(1) |
| $OPT_L$ | $OPT_R$ | Option for selecting $V_{DDQX}$(1,2) |
| $V_{DD}$ | | Power (3.3V)(1) |
| $V_{SS}$ | | Ground (0V) |
| TDI | | Test Data Input |
| TDO | | Test Data Output |
| TCK | | Test Logic Clock (10MHz) |
| TMS | | Test Mode Select |
| $\overline{TRST}$ | | Reset (Initialize TAP Controller) |

5618 tbl 01

**NOTES:**

1. $V_{DD}$, $OPT_X$, and $V_{DDQX}$ must be set to appropriate operating levels prior to applying inputs on the I/Os and controls for that port.
2. $OPT_X$ selects the operating voltage levels for the I/Os and controls on that port. If $OPT_X$ is set to VIH (3.3V), then that port's I/Os and controls will operate at 3.3V levels and $V_{DDQX}$ must be supplied at 3.3V. If $OPT_X$ is set to VIL (0V), then that port's I/Os and address controls will operate at 2.5V levels and $V_{DDQX}$ must be supplied at 2.5V. The OPT pins are independent of one another—both ports can operate at 3.3V levels, both can operate at 2.5V levels, or either can operate at 3.3V with the other at 2.5V.
3. When $\overline{REPEAT}_X$ is asserted, the counter will reset to the last valid address loaded via $\overline{ADS}_X$.
4. Accesses by the ports into specific banks are controlled by the bank address pins under the user's direct control: each port can access any bank of memory with the shared array that is not currently being accessed by the opposite port (i.e., $BA_{0L}$ - $BA_{5L}$ $\neq$ $BA_{0R}$ - $BA_{5R}$). In the event that both ports try to access the same bank at the same time, neither access will be valid, and data at the two specific addresses targeted by the ports within that bank may be corrupted (in the case that either or both ports are writing) or may result in invalid output (in the case that both ports are trying to read).

## Truth Table I—Read/Write and Enable Control(1,2,3,4)

| $\overline{OE}$[3] | CLK | $\overline{CE}_0$ | $CE_1$ | $\overline{BE}_3$ | $\overline{BE}_2$ | $\overline{BE}_1$ | $\overline{BE}_0$ | R/$\overline{W}$ | Byte 3 $I/O_{27-35}$ | Byte 2 $I/O_{18-26}$ | Byte 1 $I/O_{9-17}$ | Byte 0 $I/O_{0-8}$ | MODE |
|---|---|---|---|---|---|---|---|---|---|---|---|---|---|
| X | ↑ | H | X | X | X | X | X | X | High-Z | High-Z | High-Z | High-Z | Deselected–Power Down |
| X | ↑ | X | L | X | X | X | X | X | High-Z | High-Z | High-Z | High-Z | Deselected–Power Down |
| X | ↑ | L | H | H | H | H | H | X | High-Z | High-Z | High-Z | High-Z | All Bytes Deselected |
| X | ↑ | L | H | H | H | H | L | L | High-Z | High-Z | High-Z | $D_{IN}$ | Write to Byte 0 Only |
| X | ↑ | L | H | H | H | L | H | L | High-Z | High-Z | $D_{IN}$ | High-Z | Write to Byte 1 Only |
| X | ↑ | L | H | H | L | H | H | L | High-Z | $D_{IN}$ | High-Z | High-Z | Write to Byte 2 Only |
| X | ↑ | L | H | L | H | H | H | L | $D_{IN}$ | High-Z | High-Z | High-Z | Write to Byte 3 Only |
| X | ↑ | L | H | H | H | L | L | L | High-Z | High-Z | $D_{IN}$ | $D_{IN}$ | Write to Lower 2 Bytes Only |
| X | ↑ | L | H | L | L | H | H | L | $D_{IN}$ | $D_{IN}$ | High-Z | High-Z | Write to Upper 2 bytes Only |
| X | ↑ | L | H | L | L | L | L | L | $D_{IN}$ | $D_{IN}$ | $D_{IN}$ | $D_{IN}$ | Write to All Bytes |
| L | ↑ | L | H | H | H | H | L | H | High-Z | High-Z | High-Z | $D_{OUT}$ | Read Byte 0 Only |
| L | ↑ | L | H | H | H | L | H | H | High-Z | High-Z | $D_{OUT}$ | High-Z | Read Byte 1 Only |
| L | ↑ | L | H | H | L | H | H | H | High-Z | $D_{OUT}$ | High-Z | High-Z | Read Byte 2 Only |
| L | ↑ | L | H | L | H | H | H | H | $D_{OUT}$ | High-Z | High-Z | High-Z | Read Byte 3 Only |
| L | ↑ | L | H | H | H | L | L | H | High-Z | High-Z | $D_{OUT}$ | $D_{OUT}$ | Read Lower 2 Bytes Only |
| L | ↑ | L | H | L | L | H | H | H | $D_{OUT}$ | $D_{OUT}$ | High-Z | High-Z | Read Upper 2 Bytes Only |
| L | ↑ | L | H | L | L | L | L | H | $D_{OUT}$ | $D_{OUT}$ | $D_{OUT}$ | $D_{OUT}$ | Read All Bytes |
| H | X | X | X | X | X | X | X | X | High-Z | High-Z | High-Z | High-Z | Outputs Disabled |

5618 tbl 02

**NOTES:**
1. "H" = $V_{IH}$, "L" = $V_{IL}$, "X" = Don't Care.
2. $\overline{ADS}$, $\overline{CNTEN}$, $\overline{REPEAT}$ are set as appropriate for address access. Refer to Truth Table II for details.
3. $\overline{OE}$ is an asynchronous input signal.
4. It is possible to read or write any combination of bytes during a given access. A few representative samples have been illustrated here.

## Truth Table II—Address and Address Counter Control(1,2,7)

| Address | Previous Address | Addr Used | CLK | $\overline{ADS}$ | $\overline{CNTEN}$ | $\overline{REPEAT}$[6] | I/O[3] | MODE |
|---|---|---|---|---|---|---|---|---|
| An | X | An | ↑ | L[4] | X | H | $D_{I/O}$ (n) | External Address Used |
| X | An | An + 1 | ↑ | H | L[5] | H | $D_{I/O}$(n+1) | Counter Enabled—Internal Address generation |
| X | An + 1 | An + 1 | ↑ | H | H | H | $D_{I/O}$(n+1) | External Address Blocked—Counter disabled (An + 1 reused) |
| X | X | An | ↑ | X | X | L[4] | $D_{I/O}$(0) | Counter Set to last valid $\overline{ADS}$ load |

5618 tbl 03

**NOTES:**
1. "H" = $V_{IH}$, "L" = $V_{IL}$, "X" = Don't Care.
2. Read and write operations are controlled by the appropriate setting of R/$\overline{W}$, $\overline{CE}_0$, $CE_1$, $\overline{BE}$n and $\overline{OE}$.
3. Outputs configured in flow-through output mode: if outputs are in pipelined mode the data out will be delayed by one cycle.
4. $\overline{ADS}$ and $\overline{REPEAT}$ are independent of all other memory control signals including $\overline{CE}_0$, $CE_1$ and $\overline{BE}$n
5. The address counter advances if $\overline{CNTEN}$ = $V_{IL}$ on the rising edge of CLK, regardless of all other memory control signals including $\overline{CE}_0$, $CE_1$, $\overline{BE}$n.
6. When $\overline{REPEAT}$ is asserted, the counter will reset to the last valid address loaded via $\overline{ADS}$. This value is not set at power-up: a known location should be loaded via $\overline{ADS}$ during initialization if desired. Any subsequent $\overline{ADS}$ access during operations will update the $\overline{REPEAT}$ address location.
7. The counter includes bank address and internal address. The counter will advance across bank boundaries. For example, if the counter is in Bank 0, at address FFFh, and is advanced one location, it will move to address 0h in Bank 1. By the same token, the counter at FFFh in Bank 63 will advance to 0h in Bank 0. Refer to Timing Waveform of Counter Repeat, page 18. Care should be taken during operation to avoid having both counters point to the same bank (i.e., ensure $BA_{0L}$ - $BA_{5L}$ ≠ $BA_{0R}$ - $BA_{5R}$), as this condition will invalidate the access for both ports. Please refer to the functional description on page 19 for details.

## Recommended Operating Temperature and Supply Voltage(1)

| Grade | Ambient Temperature | GND | $V_{DD}$ |
|---|---|---|---|
| Commercial | 0°C to +70°C | 0V | 3.3V ± 150mV |
| Industrial | -40°C to +85°C | 0V | 3.3V ± 150mV |

5618 tbl 04

**NOTE:**
1. This is the parameter $T_A$. This is the "instant on" case temperature.

## Absolute Maximum Ratings(1)

| Symbol | Rating | Commercial & Industrial | Unit |
|---|---|---|---|
| $V_{TERM}$(2) | Terminal Voltage with Respect to GND | -0.5 to +4.6 | V |
| $T_{BIAS}$ | Temperature Under Bias | -55 to +125 | °C |
| $T_{STG}$ | Storage Temperature | -65 to +150 | °C |
| $I_{OUT}$ | DC Output Current | 50 | mA |

5618 tbl 06

**NOTES:**
1. Stresses greater than those listed under ABSOLUTE MAXIMUM RATINGS may cause permanent damage to the device. This is a stress rating only and functional operation of the device at these or any other conditions above those indicated in the operational sections of this specification is not implied. Exposure to absolute maximum rating conditions for extended periods may affect reliability.
2. $V_{TERM}$ must not exceed $V_{DD}$ + 150mV for more than 25% of the cycle time or 4ns maximum, and is limited to ≤ 20mA for the period of $V_{TERM}$ ≥ $V_{DD}$ + 150mV.

## Recommended DC Operating Conditions with $V_{DDQ}$ at 2.5V

| Symbol | Parameter | Min. | Typ. | Max. | Unit |
|---|---|---|---|---|---|
| $V_{DD}$ | Core Supply Voltage | 3.15 | 3.3 | 3.45 | V |
| $V_{DDQ}$ | I/O Supply Voltage(3) | 2.4 | 2.5 | 2.6 | V |
| $V_{SS}$ | Ground | 0 | 0 | 0 | V |
| $V_{IH}$ | Input High Voltage (Address & Control Inputs) | 1.7 | — | $V_{DDQ}$ + 100mV(2) | V |
| $V_{IH}$ | Input High Voltage - I/O(3) | 1.7 | — | $V_{DDQ}$ + 100mV(2) | V |
| $V_{IL}$ | Input Low Voltage | -0.3(1) | — | 0.7 | V |

5618 tbl 05a

**NOTES:**
1. Undershoot of $V_{IL}$ ≥ -1.5V for pulse width less than 10ns is allowed.
2. $V_{TERM}$ must not exceed $V_{DDQ}$ + 100mV.
3. To select operation at 2.5V levels on the I/Os and controls of a given port, the OPT pin for that port must be set to $V_{IL}$ (0V), and $V_{DDQX}$ for that port must be supplied as indicated above.

## Recommended DC Operating Conditions with $V_{DDQ}$ at 3.3V

| Symbol | Parameter | Min. | Typ. | Max. | Unit |
|---|---|---|---|---|---|
| $V_{DD}$ | Core Supply Voltage | 3.15 | 3.3 | 3.45 | V |
| $V_{DDQ}$ | I/O Supply Voltage(3) | 3.15 | 3.3 | 3.45 | V |
| $V_{SS}$ | Ground | 0 | 0 | 0 | V |
| $V_{IH}$ | Input High Voltage (Address & Control Inputs)(3) | 2.0 | — | $V_{DDQ}$ + 150mV(2) | V |
| $V_{IH}$ | Input High Voltage - I/O(3) | 2.0 | — | $V_{DDQ}$ + 150mV(2) | V |
| $V_{IL}$ | Input Low Voltage | -0.3(1) | — | 0.8 | V |

5618 tbl 05b

**NOTES:**
1. Undershoot of $V_{IL}$ ≥ -1.5V for pulse width less than 10ns is allowed.
2. $V_{TERM}$ must not exceed $V_{DDQ}$ + 150mV.
3. To select operation at 3.3V levels on the I/Os and controls of a given port, the OPT pin for that port must be set to $V_{IH}$ (3.3V), and $V_{DDQX}$ for that port must be supplied as indicated above.

## Capacitance[1]

($T_A$ = +25°C, F = 1.0MHz) PQFP ONLY

| Symbol | Parameter | Conditions[2] | Max. | Unit |
|---|---|---|---|---|
| $C_{IN}$ | Input Capacitance | $V_{IN}$ = 3dV | 8 | pF |
| $C_{OUT}$[3] | Output Capacitance | $V_{OUT}$ = 3dV | 10.5 | pF |

5618 tbl 07

**NOTES:**
1. These parameters are determined by device characterization, but are not production tested.
2. 3dV references the interpolated capacitance when the input and output switch from 0V to 3V or from 3V to 0V.
3. $C_{OUT}$ also references $C_{I/O}$.

## DC Electrical Characteristics Over the Operating Temperature and Supply Voltage Range ($V_{DD}$ = 3.3V ± 150mV)

| Symbol | Parameter | Test Conditions | 70V7519S | | Unit |
|---|---|---|---|---|---|
| | | | Min. | Max. | |
| $\|I_{LI}\|$ | Input Leakage Current[1] | $V_{DDQ}$ = Max., $V_{IN}$ = 0V to $V_{DDQ}$ | — | 10 | µA |
| $\|I_{LO}\|$ | Output Leakage Current[1] | $\overline{CE}_0$ = $V_{IH}$ or $CE_1$ = $V_{IL}$, $V_{OUT}$ = 0V to $V_{DDQ}$ | — | 10 | µA |
| $V_{OL}$ (3.3V) | Output Low Voltage[2] | $I_{OL}$ = +4mA, $V_{DDQ}$ = Min. | — | 0.4 | V |
| $V_{OH}$ (3.3V) | Output High Voltage[2] | $I_{OH}$ = -4mA, $V_{DDQ}$ = Min. | 2.4 | — | V |
| $V_{OL}$ (2.5V) | Output Low Voltage[2] | $I_{OL}$ = +2mA, $V_{DDQ}$ = Min. | — | 0.4 | V |
| $V_{OH}$ (2.5V) | Output High Voltage[2] | $I_{OH}$ = -2mA, $V_{DDQ}$ = Min. | 2.0 | — | V |

5618 tbl 08

**NOTES:**
1. At $V_{DD} \leq$ 2.0V leakages are undefined.
2. $V_{DDQ}$ is selectable (3.3V/2.5V) via OPT pins. Refer to p.5 for details.

# DC Electrical Characteristics Over the Operating Temperature and Supply Voltage Range(5) ($V_{DD}$ = 3.3V ± 150mV)

| Symbol | Parameter | Test Condition | Version | | 70V7519S200(7) Com'l Only Typ.(4) | 70V7519S200(7) Com'l Only Max. | 70V7519S166(6) Com'l & Ind Typ.(4) | 70V7519S166(6) Com'l & Ind Max. | 70V7519S133 Com'l & Ind Typ.(4) | 70V7519S133 Com'l & Ind Max. | Unit |
|---|---|---|---|---|---|---|---|---|---|---|---|
| $I_{DD}$ | Dynamic Operating Current (Both Ports Active) | $\overline{CE}_L$ and $\overline{CE}_R$ = $V_{IL}$, Outputs Disabled, f = $f_{MAX}$(1) | COM'L | S | 815 | 950 | 675 | 790 | 550 | 645 | mA |
| | | | IND | S | — | — | 675 | 830 | 550 | 675 | |
| $I_{SB1}$ | Standby Current (Both Ports - TTL Level Inputs) | $\overline{CE}_L$ = $\overline{CE}_R$ = $V_{IH}$ f = $f_{MAX}$(1) | COM'L | S | 340 | 410 | 275 | 340 | 250 | 295 | mA |
| | | | IND | S | — | — | 275 | 355 | 250 | 310 | |
| $I_{SB2}$ | Standby Current (One Port - TTL Level Inputs) | $\overline{CE}$"A" = $V_{IL}$ and $\overline{CE}$"B" = $V_{IH}$(3) Active Port Outputs Disabled, f=$f_{MAX}$(1) | COM'L | S | 690 | 770 | 515 | 640 | 460 | 520 | mA |
| | | | IND | S | — | — | 515 | 660 | 460 | 545 | |
| $I_{SB3}$ | Full Standby Current (Both Ports - CMOS Level Inputs) | Both Ports $\overline{CE}_L$ and $\overline{CE}_R$ ≥ $V_{DDQ}$ - 0.2V, $V_{IN}$ ≥ $V_{DDQ}$ - 0.2V or $V_{IN}$ ≤ 0.2V, f = 0(2) | COM'L | S | 10 | 30 | 10 | 30 | 10 | 30 | mA |
| | | | IND | S | — | — | 10 | 40 | 10 | 40 | |
| $I_{SB4}$ | Full Standby Current (One Port - CMOS Level Inputs) | $\overline{CE}$"A" ≤ 0.2V and $\overline{CE}$"B" ≥ $V_{DDQ}$ - 0.2V(5) $V_{IN}$ ≥ $V_{DDQ}$ - 0.2V or $V_{IN}$ ≤ 0.2V, Active Port, Outputs Disabled, f = $f_{MAX}$(1) | COM'L | S | 690 | 770 | 515 | 640 | 460 | 520 | mA |
| | | | IND | S | — | — | 515 | 660 | 460 | 545 | |

5618 tbl 09

**NOTES:**

1. At f = $f_{MAX}$, address and control lines (except Output Enable) are cycling at the maximum frequency clock cycle of 1/$t_{CYC}$, using "AC TEST CONDITIONS" at input levels of GND to 3V.
2. f = 0 means no address, clock, or control lines change. Applies only to input at CMOS level standby.
3. Port "A" may be either left or right port. Port "B" is the opposite from port "A".
4. $V_{DD}$ = 3.3V, $T_A$ = 25°C for Typ, and are not production tested. $I_{DD\,DC}$(f=0) = 120mA (Typ).
5. $\overline{CE}_X$ = $V_{IL}$ means $\overline{CE}_{0X}$ = $V_{IL}$ and $CE_{1X}$ = $V_{IH}$
   $\overline{CE}_X$ = $V_{IH}$ means $\overline{CE}_{0X}$ = $V_{IH}$ or $CE_{1X}$ = $V_{IL}$
   $\overline{CE}_X$ ≤ 0.2V means $\overline{CE}_{0X}$ ≤ 0.2V and $CE_{1X}$ ≥ $V_{DDQ}$ - 0.2V
   $\overline{CE}_X$ ≥ $V_{DDQ}$ - 0.2V means $\overline{CE}_{0X}$ ≥ $V_{DDQ}$ - 0.2V or $CE_{1X}$ ≤ 0.2V
   "X" represents "L" for left port or "R" for right port.
6. 166MHz Industrial Temperature not available in BF208 package.
7. This speed grade available when $V_{DDQ}$ = 3.3.V for a specific port (i.e., $OPT_X$ = $V_{IH}$). This speed grade available in BC-256 package only.

## AC Test Conditions ($V_{DDQ}$ - 3.3V/2.5V)

| | |
|---|---|
| Input Pulse Levels (Address & Controls) | GND to 3.0V/GND to 2.4V |
| Input Pulse Levels (I/Os) | GND to 3.0V/GND to 2.4V |
| Input Rise/Fall Times | 2ns |
| Input Timing Reference Levels | 1.5V/1.25V |
| Output Reference Levels | 1.5V/1.25V |
| Output Load | Figures 1 and 2 |

5618 tbl 10

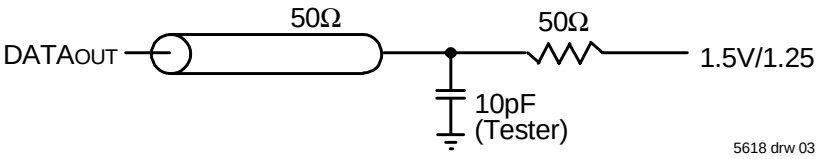


**Figure 1. AC Output Test load.**

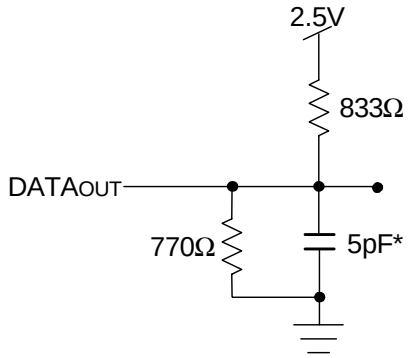


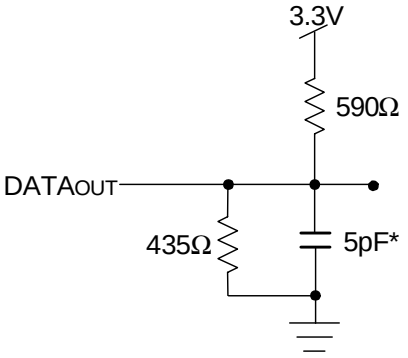


5618 drw 04

**Figure 2. Output Test Load (For $t_{CKLZ}$, $t_{CKHZ}$, $t_{OLZ}$, and $t_{OHZ}$).**
*Including scope and jig.

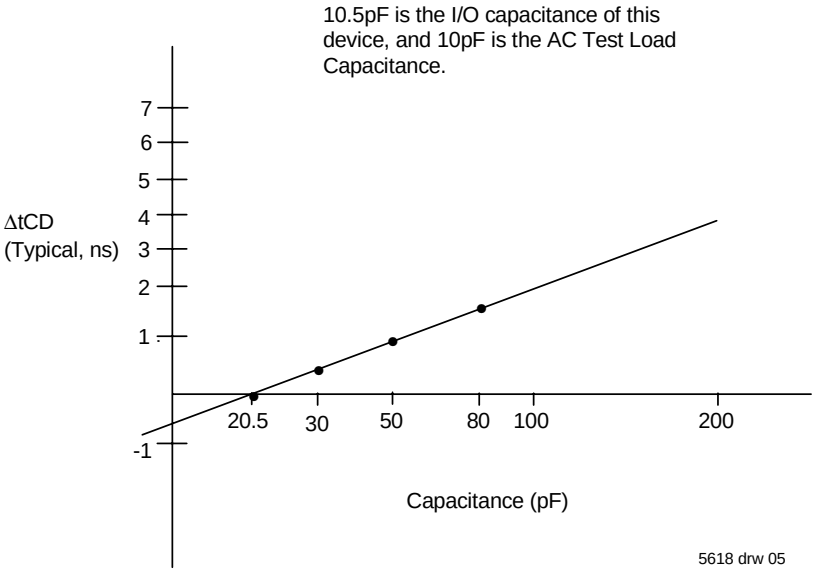


**Figure 3. Typical Output Derating (Lumped Capacitive Load).**

# AC Electrical Characteristics Over the Operating Temperature Range (Read and Write Cycle Timing)(2,3) ($V_{DD}$ = 3.3V ± 150mV, $T_A$ = 0°C to +70°C)

| | | 70V7519S200(5) Com'l Only | | 70V7519S166(3,4) Com'l & Ind | | 70V7519S133(3) Com'l & Ind | | |
|---|---|---|---|---|---|---|---|---|
| **Symbol** | **Parameter** | **Min.** | **Max.** | **Min.** | **Max.** | **Min.** | **Max.** | **Unit** |
| $t_{CYC1}$ | Clock Cycle Time (Flow-Through)(1) | 15 | — | 20 | — | 25 | — | ns |
| $t_{CYC2}$ | Clock Cycle Time (Pipelined)(1) | 5 | — | 6 | — | 7.5 | — | ns |
| $t_{CH1}$ | Clock High Time (Flow-Through)(1) | 5 | — | 6 | — | 7 | — | ns |
| $t_{CL1}$ | Clock Low Time (Flow-Through)(1) | 5 | — | 6 | — | 7 | — | ns |
| $t_{CH2}$ | Clock High Time (Pipelined)(2) | 2.0 | — | 2.1 | — | 2.6 | — | ns |
| $t_{CL2}$ | Clock Low Time (Pipelined)(1) | 2.0 | — | 2.1 | — | 2.6 | — | ns |
| $t_R$ | Clock Rise Time | — | 1.5 | — | 1.5 | — | 1.5 | ns |
| $t_F$ | Clock Fall Time | — | 1.5 | — | 1.5 | — | 1.5 | ns |
| $t_{SA}$ | Address Setup Time | 1.5 | — | 1.7 | — | 1.8 | — | ns |
| $t_{HA}$ | Address Hold Time | 0.5 | — | 0.5 | — | 0.5 | — | ns |
| $t_{SC}$ | Chip Enable Setup Time | 1.5 | — | 1.7 | — | 1.8 | — | ns |
| $t_{HC}$ | Chip Enable Hold Time | 0.5 | — | 0.5 | — | 0.5 | — | ns |
| $t_{SB}$ | Byte Enable Setup Time | 1.5 | — | 1.7 | — | 1.8 | — | ns |
| $t_{HB}$ | Byte Enable Hold Time | 0.5 | — | 0.5 | — | 0.5 | — | ns |
| $t_{SW}$ | R/W Setup Time | 1.5 | — | 1.7 | — | 1.8 | — | ns |
| $t_{HW}$ | R/W Hold Time | 0.5 | — | 0.5 | — | 0.5 | — | ns |
| $t_{SD}$ | Input Data Setup Time | 1.5 | — | 1.7 | — | 1.8 | — | ns |
| $t_{HD}$ | Input Data Hold Time | 0.5 | — | 0.5 | — | 0.5 | — | ns |
| $t_{SAD}$ | $\overline{ADS}$ Setup Time | 1.5 | — | 1.7 | — | 1.8 | — | ns |
| $t_{HAD}$ | $\overline{ADS}$ Hold Time | 0.5 | — | 0.5 | — | 0.5 | — | ns |
| $t_{SCN}$ | $\overline{CNTEN}$ Setup Time | 1.5 | — | 1.7 | — | 1.8 | — | ns |
| $t_{HCN}$ | $\overline{CNTEN}$ Hold Time | 0.5 | — | 0.5 | — | 0.5 | — | ns |
| $t_{SRPT}$ | $\overline{REPEAT}$ Setup Time | 1.5 | — | 1.7 | — | 1.8 | — | ns |
| $t_{HRPT}$ | $\overline{REPEAT}$ Hold Time | 0.5 | — | 0.5 | — | 0.5 | — | ns |
| $t_{OE}$ | Output Enable to Data Valid | — | 4.0 | — | 4.0 | — | 4.2 | ns |
| $t_{OLZ}$ | Output Enable to Output Low-Z | 0.5 | — | 0.5 | — | 0.5 | — | ns |
| $t_{OHZ}$ | Output Enable to Output High-Z | 1 | 3.4 | 1 | 3.6 | 1 | 4.2 | ns |
| $t_{CD1}$ | Clock to Data Valid (Flow-Through)(1) | — | 10 | — | 12 | — | 15 | ns |
| $t_{CD2}$ | Clock to Data Valid (Pipelined)(1) | — | 3.4 | — | 3.6 | — | 4.2 | ns |
| $t_{DC}$ | Data Output Hold After Clock High | 1 | — | 1 | — | 1 | — | ns |
| $t_{CKHZ}$ | Clock High to Output High-Z | 1 | 3.4 | 1 | 3.6 | 1 | 4.2 | ns |
| $t_{CKLZ}$ | Clock High to Output Low-Z | 0.5 | — | 0.5 | — | 0.5 | — | ns |
| **Port-to-Port Delay** | | | | | | | | |
| $t_{CO}$ | Clock-to-Clock Offset | 5.0 | — | 6.0 | — | 7.5 | — | ns |

5618 tbl 11

**NOTES:**

1. The Pipelined output parameters ($t_{CYC2}$, $t_{CD2}$) apply to either or both left and right ports when $\overline{FT}$/PIPEX = $V_{IH}$. Flow-through parameters ($t_{CYC1}$, $t_{CD1}$) apply when $\overline{FT}$/PIPEX = $V_{IL}$ for that port.
2. All input signals are synchronous with respect to the clock except for the asynchronous Output Enable ($\overline{OE}$) and $\overline{FT}$/PIPE. $\overline{FT}$/PIPE should be treated as a DC signal, i.e. steady state during operation.
3. These values are valid for either level of $V_{DDQ}$ (3.3V/2.5V). See page 5 for details on selecting the desired operating voltage levels for each port.
4. 166MHz Industrial Temperature not available in BF208 package.
5. This speed grade available when $V_{DDQ}$ = 3.3.V for a specific port (i.e., OPTx = $V_{IH}$). This speed grade available in BC256 package only.

## Timing Waveform of Read Cycle for Pipelined Operation (**ADS** Operation) (**FT**/PIPE'X' = VIH)(2)

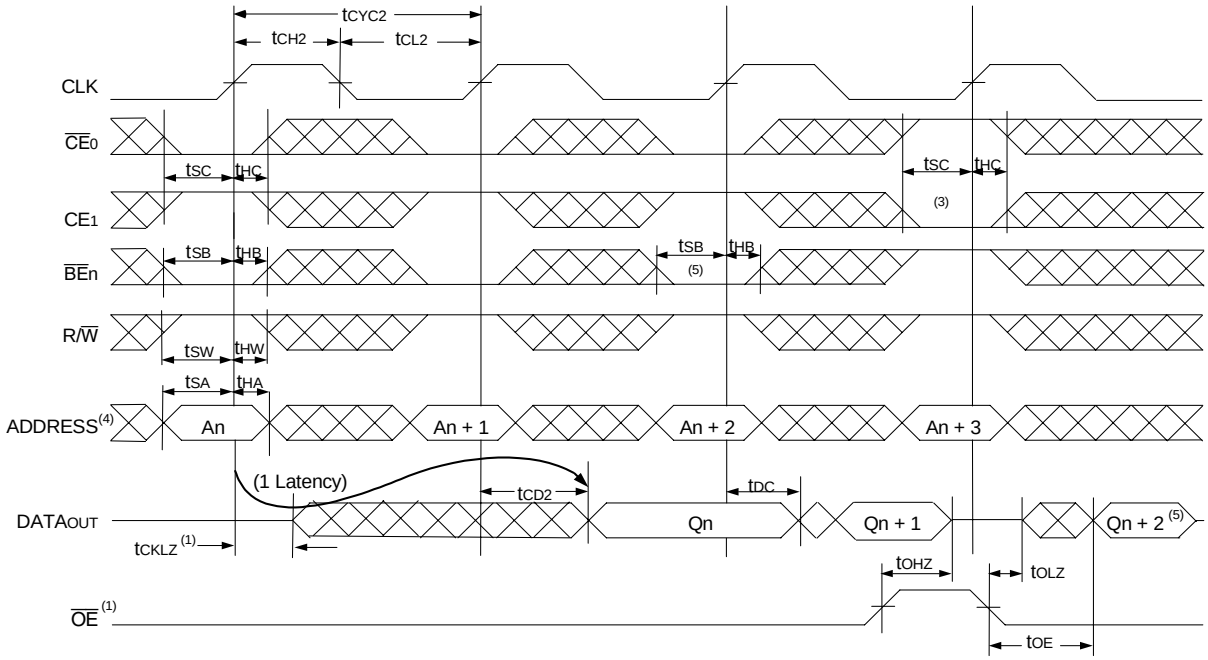


5618 drw 06

## Timing Waveform of Read Cycle for Flow-through Output (**FT**/PIPE"X" = VIL)(2,6)

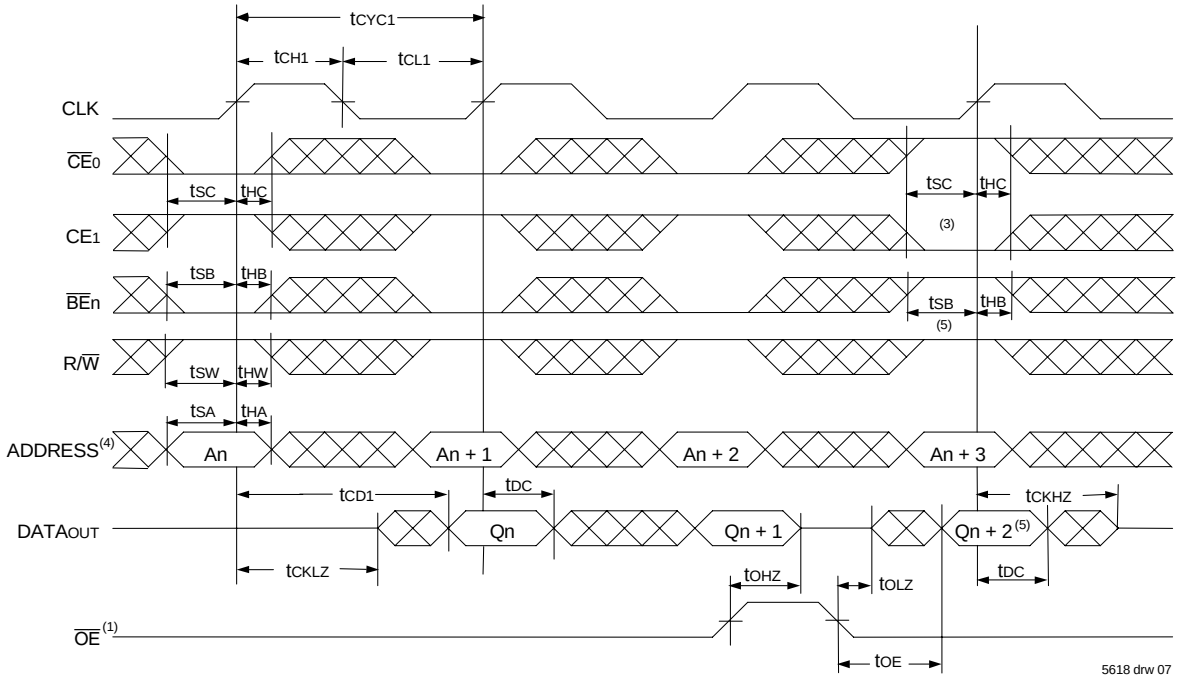


5618 drw 07

**NOTES:**

1. $\overline{OE}$ is asynchronously controlled; all other inputs are synchronous to the rising clock edge.
2. $\overline{ADS}$ = VIL, $\overline{CNTEN}$ and $\overline{REPEAT}$ = VIH.
3. The output is disabled (High-Impedance state) by $\overline{CE}_0$ = VIH, $CE_1$ = VIL, $\overline{BE}_n$ = VIH following the next rising edge of the clock. Refer to Truth Table 1.
4. Addresses do not have to be accessed sequentially since $\overline{ADS}$ = VIL constantly loads the address on the rising edge of the CLK; numbers are for reference use only.
5. If $\overline{BE}_n$ was HIGH, then the appropriate Byte of DATAOUT for Qn + 2 would be disabled (High-Impedance state).
6. "x" denotes Left or Right port. The diagram is with respect to that port.

## Timing Waveform of a Multi-Device Pipelined Read(1,2)

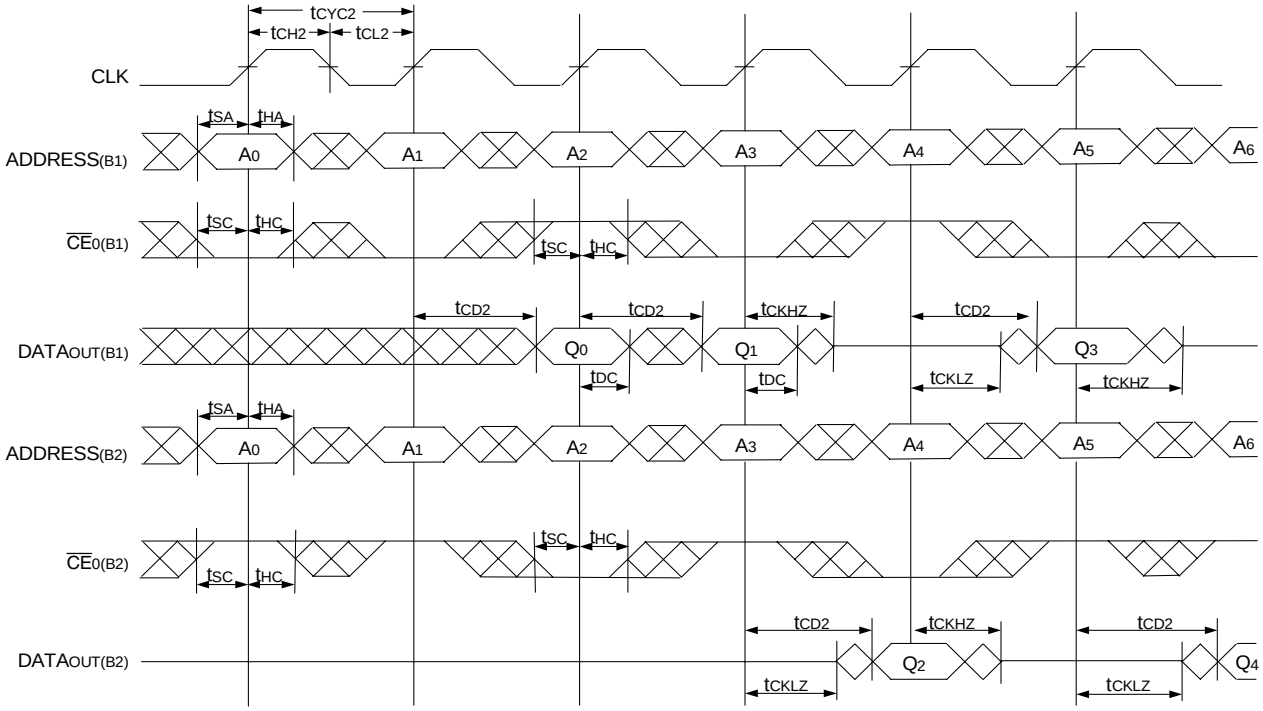


5618 drw 08

## Timing Waveform of a Multi-Device Flow-Through Read(1,2)

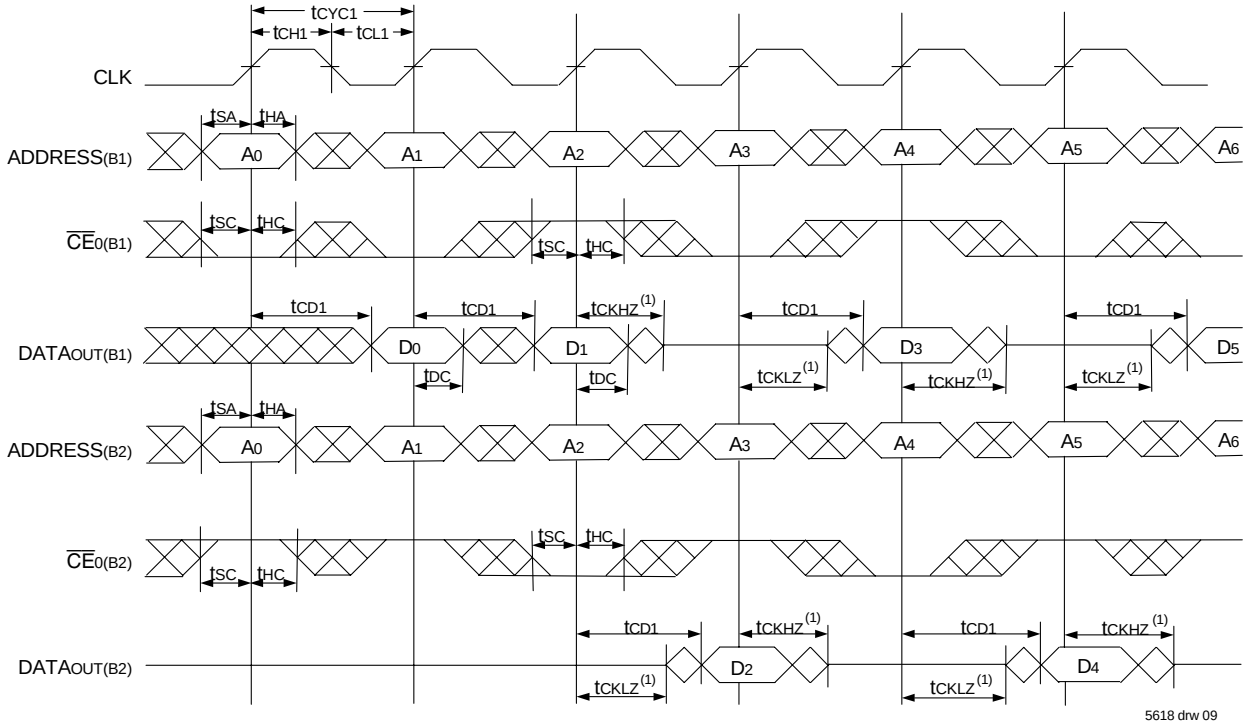


5618 drw 09

**NOTES:**

1. B1 Represents Device #1; B2 Represents Device #2. Each Device consists of one IDT70V7519 for this waveform, and are setup for depth expansion in this example. ADDRESS(B1) = ADDRESS(B2) in this situation.
2. $\overline{BE}_n$, $\overline{OE}$, and $\overline{ADS}$ = $V_{IL}$; $CE_{1(B1)}$, $CE_{1(B2)}$, R/$\overline{W}$, $\overline{CNTEN}$, and $\overline{REPEAT}$ = $V_{IH}$.

## Timing Waveform of Port A Write to Pipelined Port B Read(1,2,4)

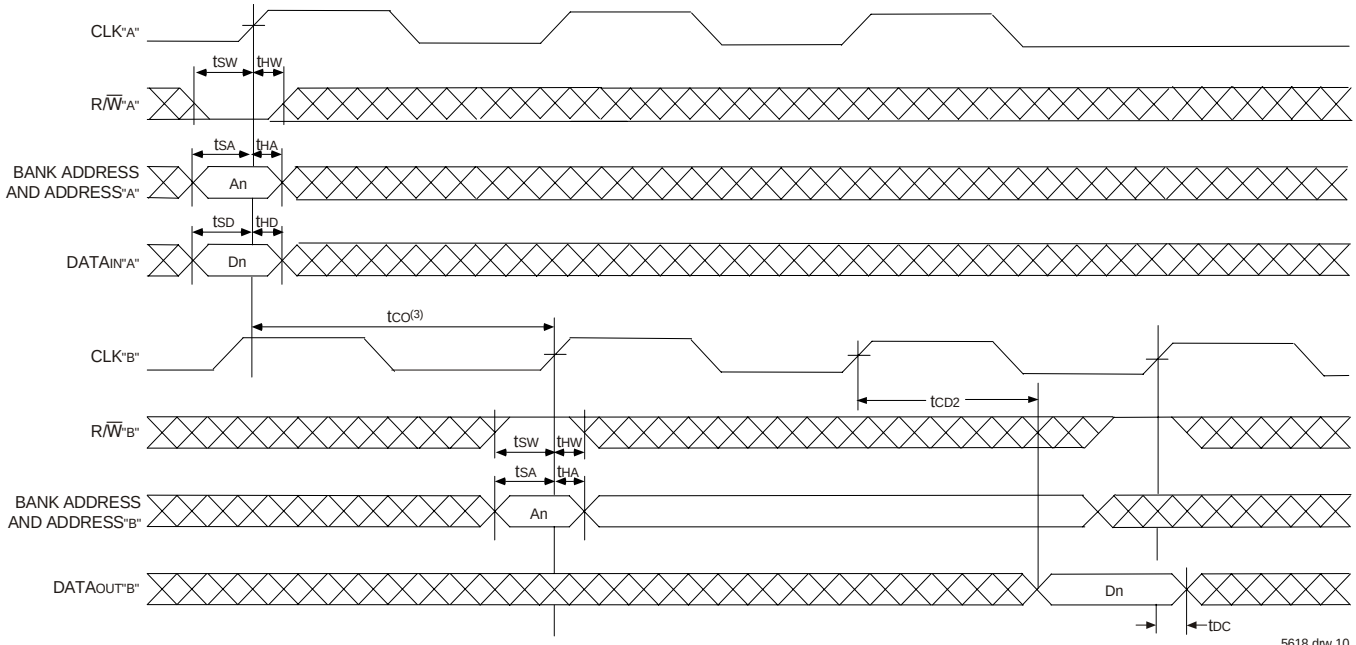


**NOTES:**

1. $\overline{CE}_0$, $\overline{BE}_n$, and $\overline{ADS}$ = $V_{IL}$; $CE_1$, $\overline{CNTEN}$, and $\overline{REPEAT}$ = $V_{IH}$.
2. $\overline{OE}$ = $V_{IL}$ for Port "B", which is being read from. $\overline{OE}$ = $V_{IH}$ for Port "A", which is being written to.
3. If $t_{CO}$ < minimum specified, then operations from both ports are INVALID. If $t_{CO} \geq$ minimum, then data from Port "B" read is available on first Port "B" clock cycle (ie, time from write to valid read on opposite port will be $t_{CO} + t_{CYC2} + t_{CD2}$).
4. All timing is the same for Left and Right ports. Port "A" may be either Left or Right port. Port "B" is the opposite of Port "A"

## Timing Waveform with Port-to-Port Flow-Through Read(1,2,4)

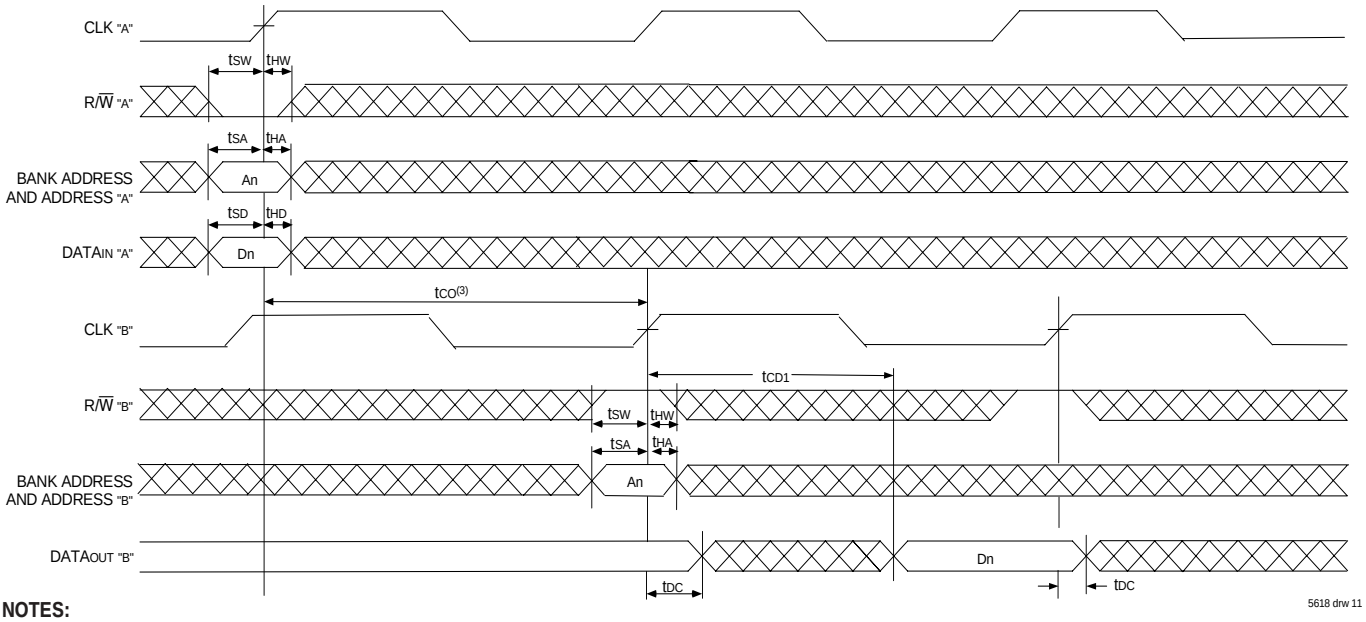


**NOTES:**

1. $\overline{CE}_0$, $\overline{BE}_n$, and $\overline{ADS}$ = $V_{IL}$; $CE_1$, $\overline{CNTEN}$, and $\overline{REPEAT}$ = $V_{IH}$.
2. $\overline{OE}$ = $V_{IL}$ for the Right Port, which is being read from. $\overline{OE}$ = $V_{IH}$ for the Left Port, which is being written to.
3. If $t_{CO}$ < minimum specified, then operations from both ports are INVALID. If $t_{CO} \geq$ minimum, then data from Port "B" read is available on first Port "B" clock cycle (i.e., time from write to valid read on opposite port will be $t_{CO} + t_{CD1}$).
4. All timing is the same for both left and right ports. Port "A" may be either left or right port. Port "B" is the opposite of Port "A".

## Timing Waveform of Pipelined Read-to-Write-to-Read ($\overline{OE}$ = VIL)(2)

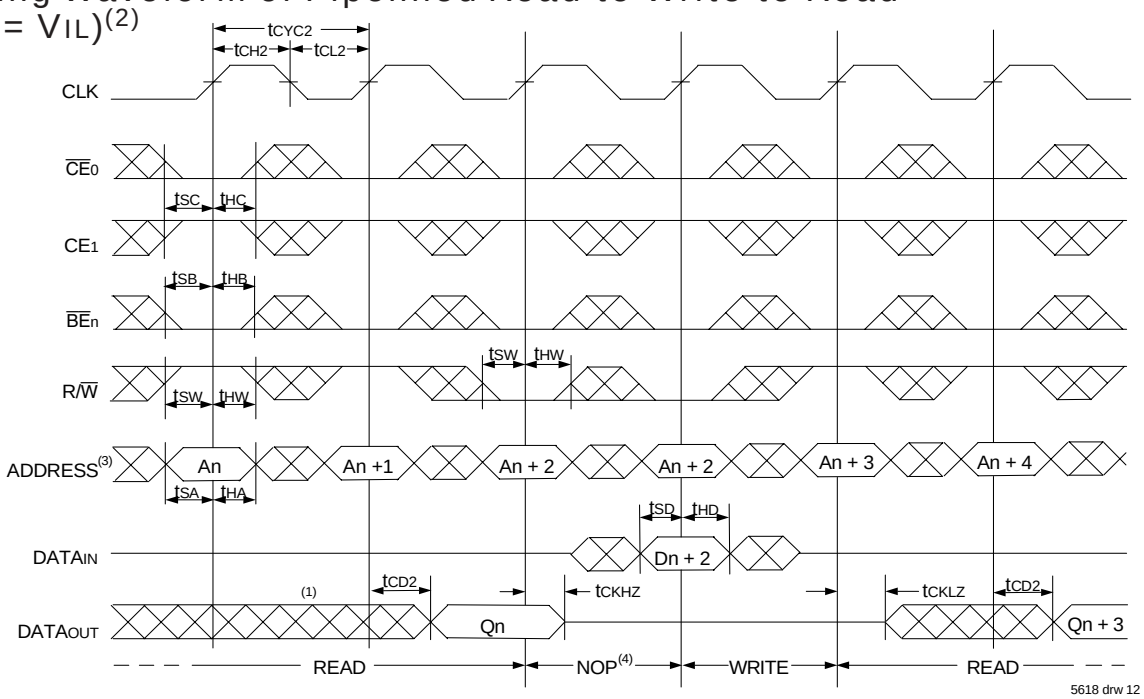


**NOTES:**
1. Output state (High, Low, or High-impedance) is determined by the previous cycle control signals.
2. $\overline{CE}_0$, $\overline{BE}_n$, and $\overline{ADS}$ = VIL; CE1, $\overline{CNTEN}$, and $\overline{REPEAT}$ = VIH. "NOP" is "No Operation".
3. Addresses do not have to be accessed sequentially since $\overline{ADS}$ = VIL constantly loads the address on the rising edge of the CLK; numbers are for reference use only.
4. "NOP" is "No Operation." Data in memory at the selected address may be corrupted and should be re-written to guarantee data integrity.

## Timing Waveform of Pipelined Read-to-Write-to-Read ($\overline{OE}$ Controlled)(2)

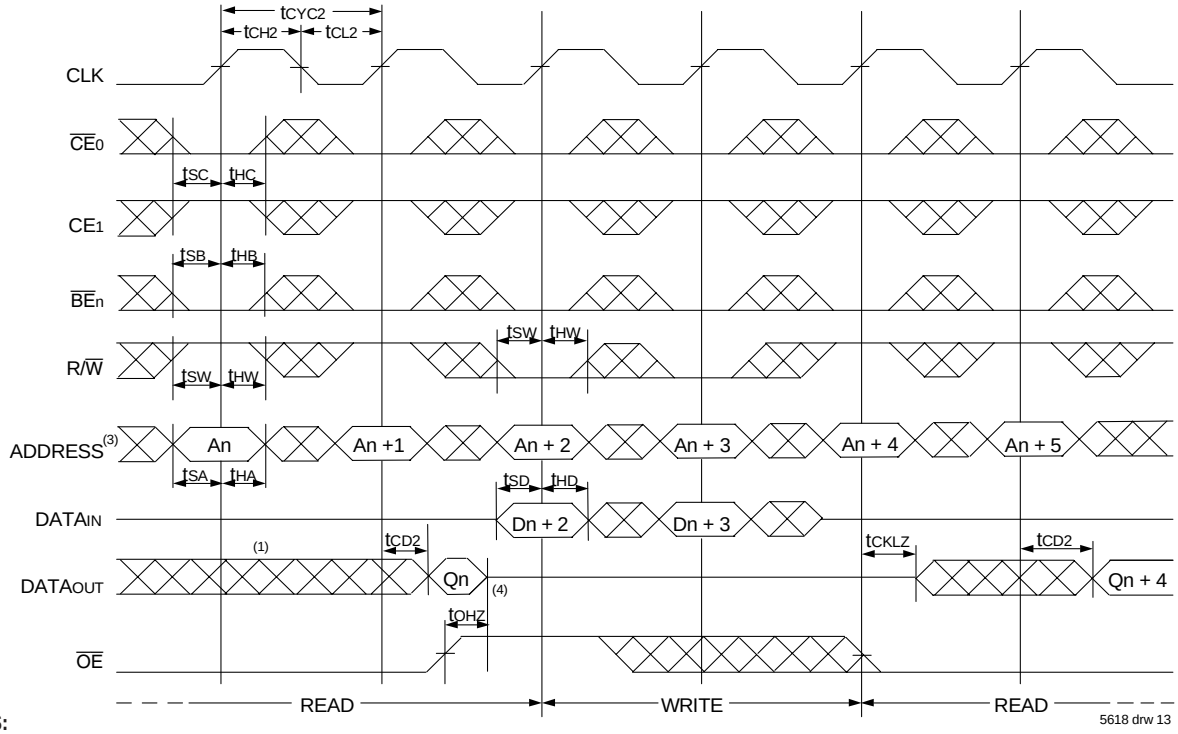


**NOTES:**
1. Output state (High, Low, or High-impedance) is determined by the previous cycle control signals.
2. $\overline{CE}_0$, $\overline{BE}_n$, and $\overline{ADS}$ = VIL; CE1, $\overline{CNTEN}$, and $\overline{REPEAT}$ = VIH.
3. Addresses do not have to be accessed sequentially since $\overline{ADS}$ = VIL constantly loads the address on the rising edge of the CLK; numbers are for reference use only.
4. This timing does not meet requirements for fastest speed grade. This waveform indicates how logically it could be done if timing so allows.

## Timing Waveform of Flow-Through Read-to-Write-to-Read ($\overline{OE}$ = VIL)(2)

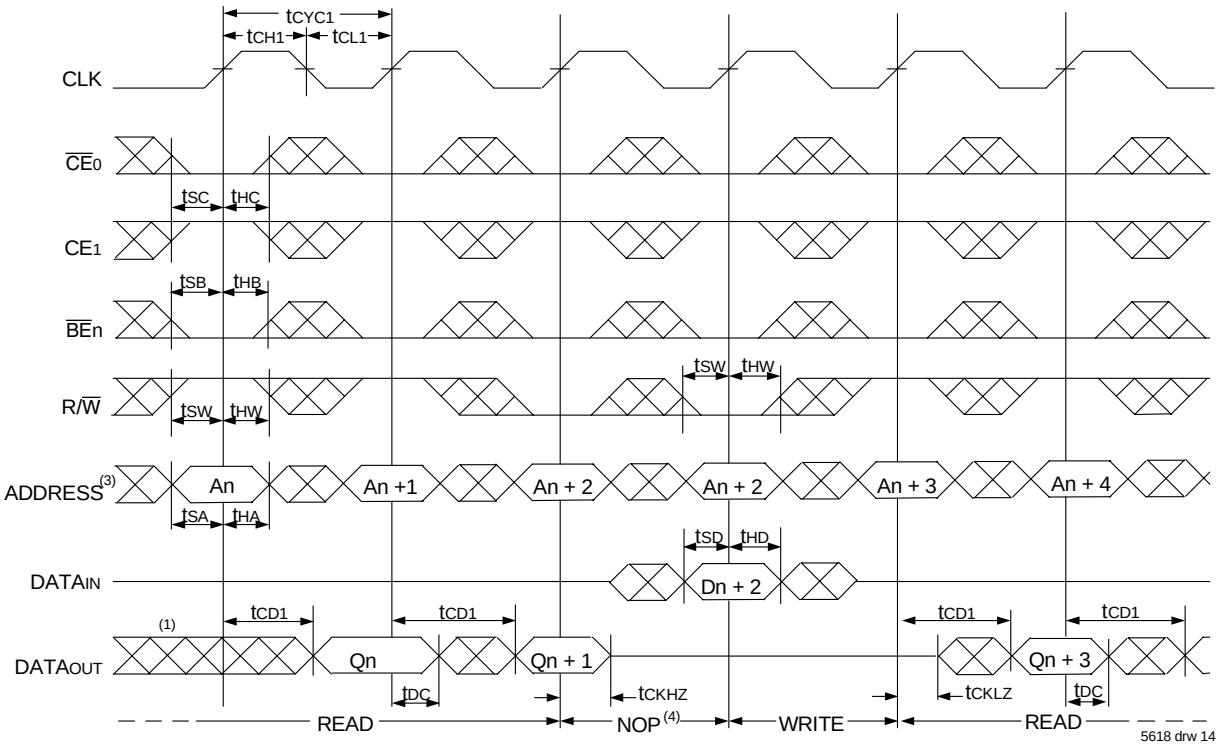


## Timing Waveform of Flow-Through Read-to-Write-to-Read ($\overline{OE}$ Controlled)(2)

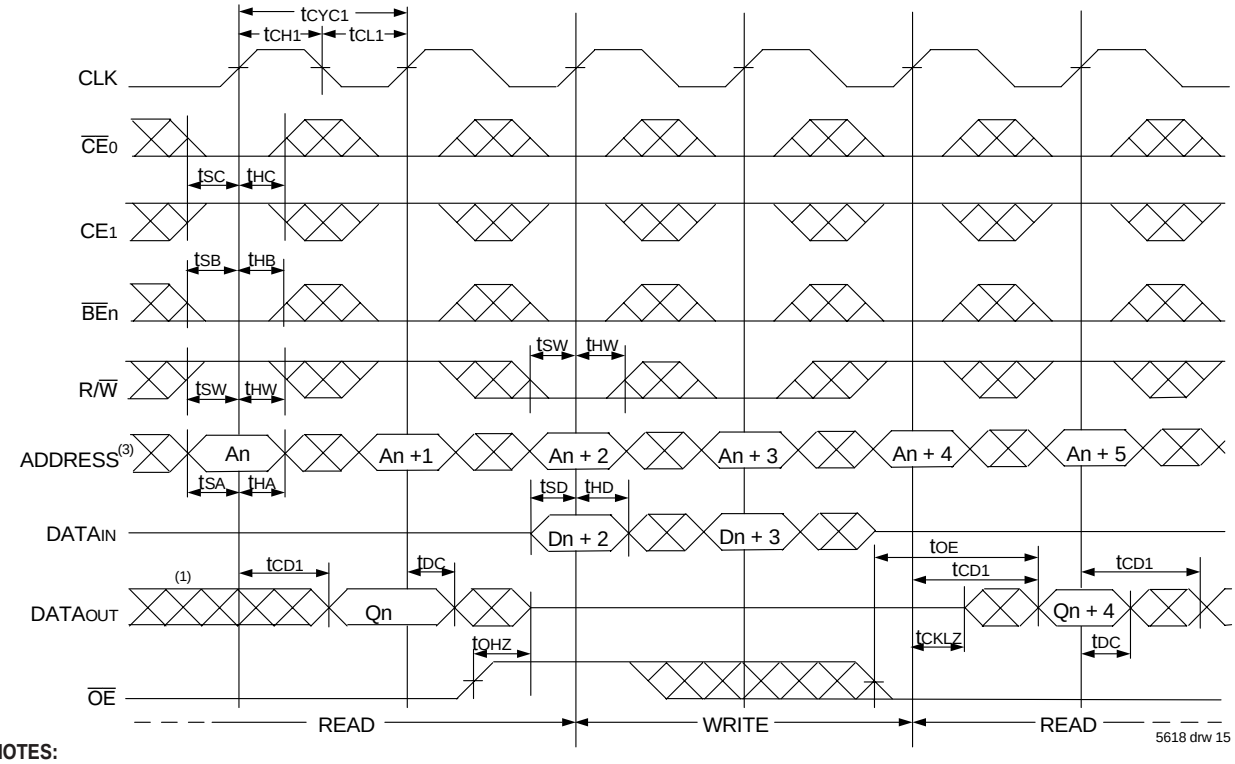


**NOTES:**

1. Output state (High, Low, or High-impedance) is determined by the previous cycle control signals.
2. $\overline{CE}_0$, $\overline{BE}$n, and $\overline{ADS}$ = VIL; CE1, $\overline{CNTEN}$, and $\overline{REPEAT}$ = VIH.
3. Addresses do not have to be accessed sequentially since $\overline{ADS}$ = VIL constantly loads the address on the rising edge of the CLK; numbers are for reference use only.
4. "NOP" is "No Operation." Data in memory at the selected address may be corrupted and should be re-written to guarantee data integrity.

## Timing Waveform of Pipelined Read with Address Counter Advance(1)

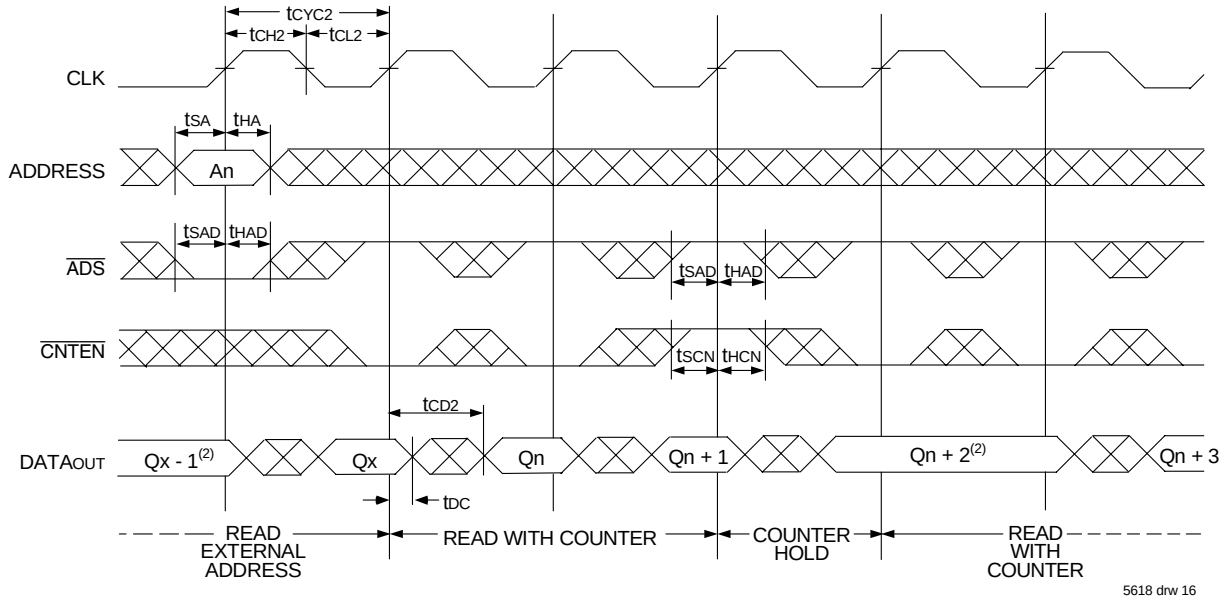


## Timing Waveform of Flow-Through Read with Address Counter Advance(1)

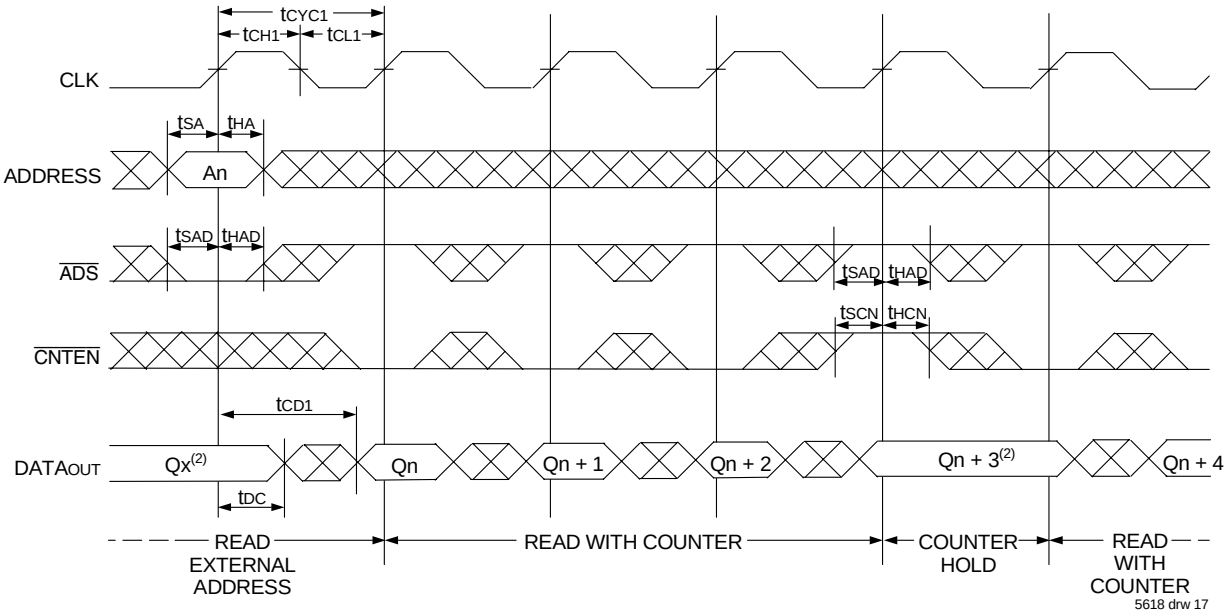


**NOTES:**

1. $\overline{CE}_0$, $\overline{OE}$, $\overline{BE}n$ = $V_{IL}$; $CE_1$, R/$\overline{W}$, and $\overline{REPEAT}$ = $V_{IH}$.
2. If there is no address change via $\overline{ADS}$ = $V_{IL}$ (loading a new address) or $\overline{CNTEN}$ = $V_{IL}$ (advancing the address), i.e. $\overline{ADS}$ = $V_{IH}$ and $\overline{CNTEN}$ = $V_{IH}$, then the data output remains constant for subsequent clocks.

## Timing Waveform of Write with Address Counter Advance (Flow-through or Pipelined Inputs)(1,6)

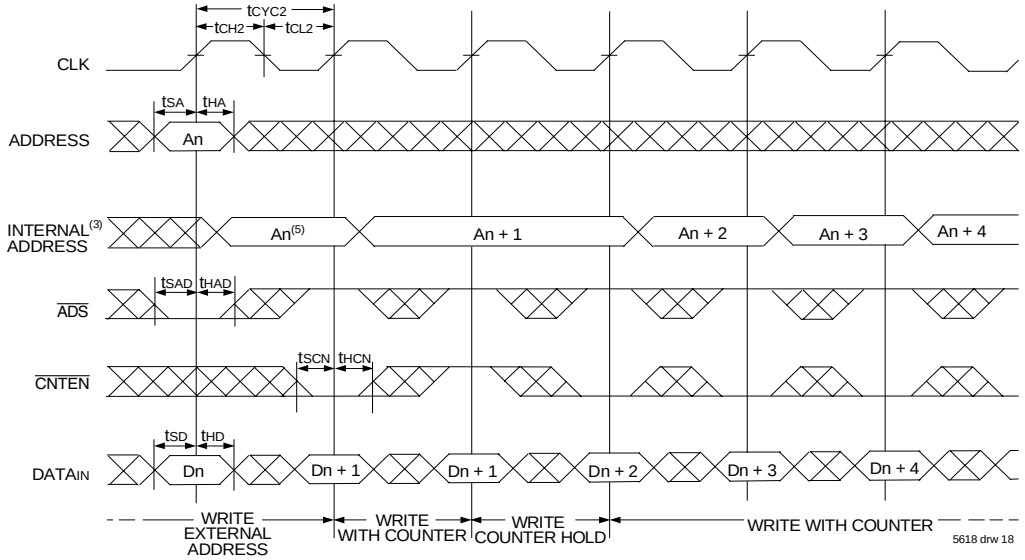


## Timing Waveform of Counter Repeat for Flow Through Mode(2,6,7)

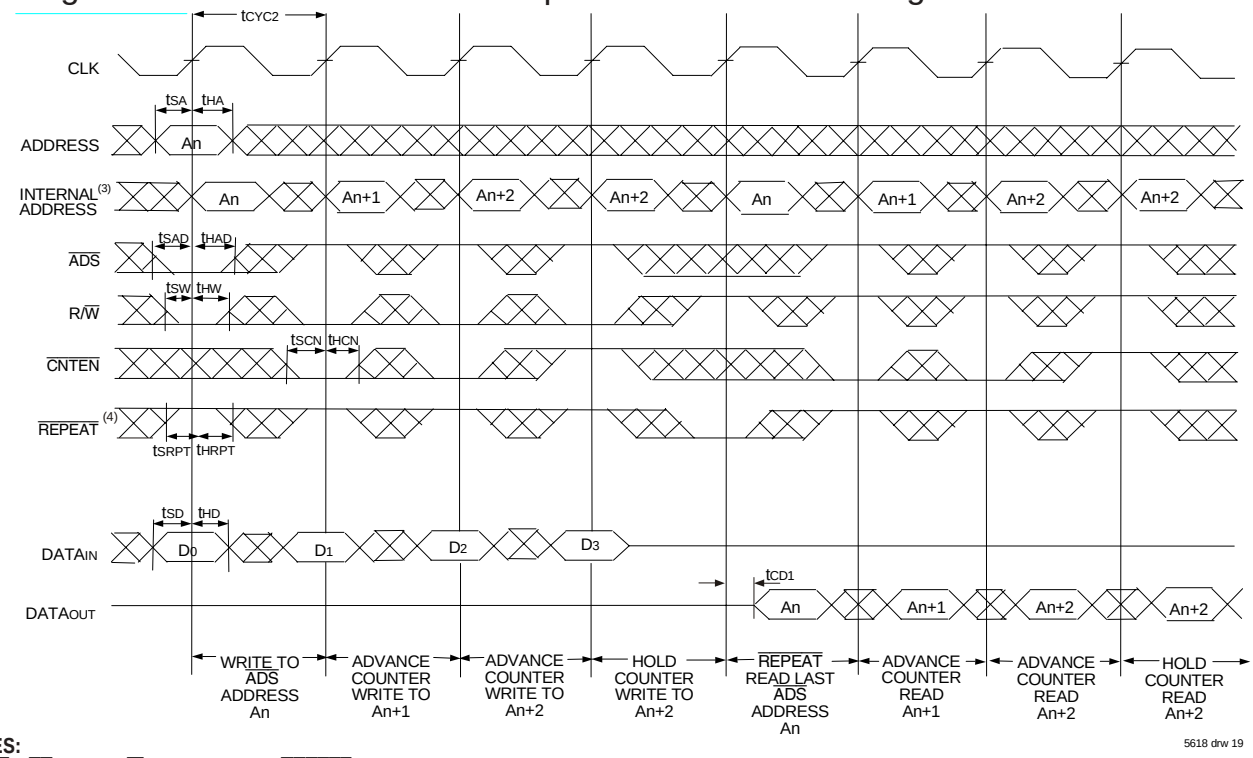


**NOTES:**

1. $\overline{CE}_0$, $\overline{BE}_n$, and R/$\overline{W}$ = $V_{IL}$; $CE_1$ and $\overline{REPEAT}$ = $V_{IH}$.
2. $\overline{CE}_0$, $\overline{BE}_n$ = $V_{IL}$; $CE_1$ = $V_{IH}$.
3. The "Internal Address" is equal to the "External Address" when $\overline{ADS}$ = $V_{IL}$ and equals the counter output when $\overline{ADS}$ = $V_{IH}$.
4. No dead cycle exists during $\overline{REPEAT}$ operation. A READ or WRITE cycle may be coincidental with the counter $\overline{REPEAT}$ cycle: Address loaded by last valid $\overline{ADS}$ load will be accessed. For more information on $\overline{REPEAT}$ function refer to Truth Table II.
5. $\overline{CNTEN}$ = $V_{IL}$ advances Internal Address from 'An' to 'An +1'. The transition shown indicates the time required for the counter to advance. The 'An +1'Address is written to during this cycle.
6. The counter includes bank address and internal address. The counter will advance across bank boundaries. For example, if the counter is in Bank 0, at address FFFh, and is advanced one location, it will move to address 0h in Bank 1. By the same token, the counter at FFFh in Bank 63 will advance to 0h in Bank 0.
7. For Pipelined Mode user should add 1 cycle latency for outputs as per timing waveform of read cycle for pipelined operations.

## Functional Description

The IDT70V7519 is a high-speed 256Kx36 (9 Mbit) synchronous Bank-Switchable Dual-Ported SRAM organized into 64 independent 4Kx36 banks. Based on a standard SRAM core instead of a traditional true dual-port memory core, this bank-switchable device offers the benefits of increased density and lower cost-per-bit while retaining many of the features of true dual-ports. These features include simultaneous, random access to the shared array, separate clocks per port, 166 MHz operating speed, full-boundary counters, and pinouts compatible with the IDT70V3599 (128Kx36) dual-port family.

The two ports are permitted independent, simultaneous access into separate banks within the shared array. Access by the ports into specific banks are controlled by the bank address pins under the user's direct control: each port can access any bank of memory with the shared array that is not currently being accessed by the opposite port (i.e., $BA_{0L}$ - $BA_{5L}$ $\neq$ $BA_{0R}$ - $BA_{5R}$). In the event that both ports try to access the same bank at the same time, neither access will be valid, and data at the two specific addresses targeted by the ports within that bank may be corrupted (in the case that either or both ports are writing) or may result in invalid output (in the case that both ports are trying to read).

The IDT70V7519 provides a true synchronous Dual-Port Static RAM interface. Registered inputs provide minimal setup and hold times on address, data and all critical control inputs.

An asynchronous output enable is provided to ease asynchronous bus interfacing. Counter enable inputs are also provided to stall the operation of the address counters for fast interleaved memory applications.

A HIGH on $\overline{CE}_0$ or a LOW on $CE_1$ for one clock cycle will power down the internal circuitry on each port (individually controlled) to reduce static power consumption. Dual chip enables allow easier banking of multiple IDT70V7519s for depth expansion configurations. Two cycles are required with $\overline{CE}_0$ LOW and $CE_1$ HIGH to read valid data on the outputs.

## Depth and Width Expansion

The IDT70V7519 features dual chip enables (refer to Truth Table I) in order to facilitate rapid and simple depth expansion with no requirements for external logic. Figure 4 illustrates how to control the various chip enables in order to expand two devices in depth.

The IDT70V7519 can also be used in applications requiring expanded width, as indicated in Figure 4. Through combining the control signals, the devices can be grouped as necessary to accommodate applications needing 72-bits or wider.

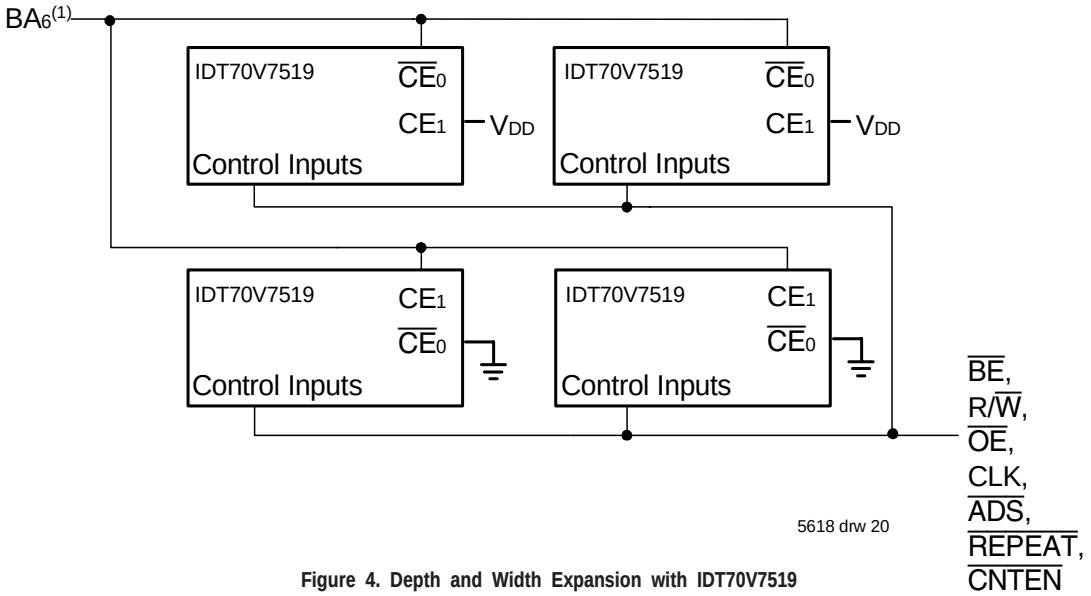


**Figure 4. Depth and Width Expansion with IDT70V7519**

**NOTE:**

1. In the case of depth expansion, the additional address pin logically serves as an extension of the bank address. Accesses by the ports into specific banks are controlled by the bank address pins under the user's direct control: each port can access any bank of memory within the shared array that is not currently being accessed by the opposite port (i.e., $BA_{0L}$ - $BA_{6L}$ $\neq$ $BA_{0R}$ - $BA_{6R}$). In the event that both ports try to access the same bank at the same time, neither access will be valid, and data at the two specific addresses targeted by the parts within that bank may be corrupted (in the case that either or both parts are writing) or may result in invalid output (in the case that both ports are trying to read).

## JTAG Timing Specifications

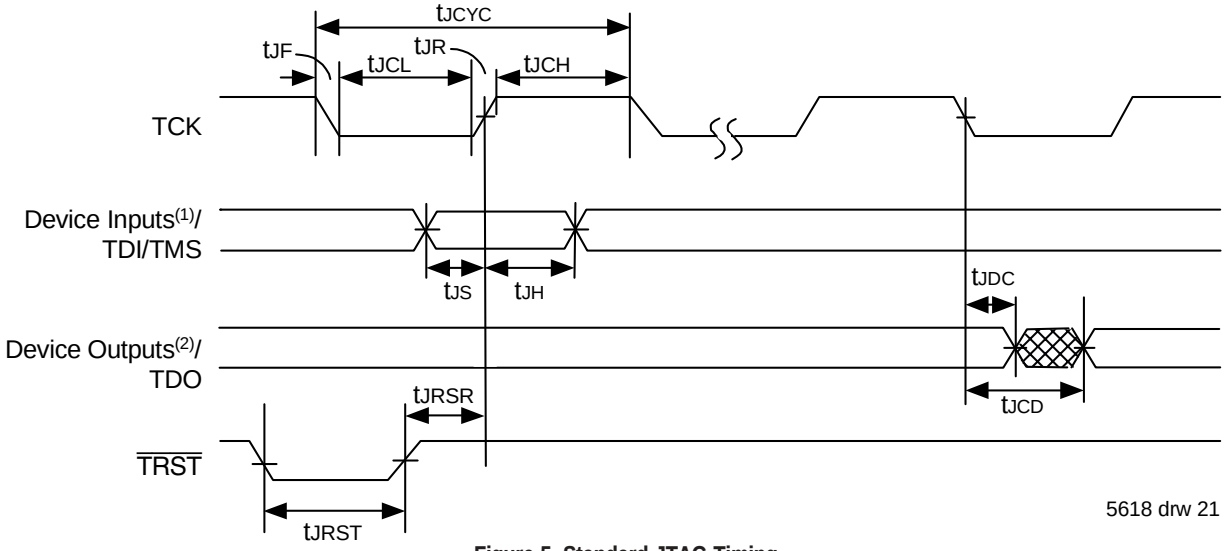


**Figure 5. Standard JTAG Timing**

**NOTES:**
1. Device inputs = All device inputs except TDI, TMS, TRST, and TCK.
2. Device outputs = All device outputs except TDO.

## JTAG AC Electrical Characteristics(1,2,3,4)

| Symbol | Parameter | 70V7519 | | |
|---|---|---|---|---|
| | | Min. | Max. | Units |
| $t_{JCYC}$ | JTAG Clock Input Period | 100 | — | ns |
| $t_{JCH}$ | JTAG Clock HIGH | 40 | — | ns |
| $t_{JCL}$ | JTAG Clock Low | 40 | — | ns |
| $t_{JR}$ | JTAG Clock Rise Time | — | 3(1) | ns |
| $t_{JF}$ | JTAG Clock Fall Time | — | 3(1) | ns |
| $t_{JRST}$ | JTAG Reset | 50 | — | ns |
| $t_{JRSR}$ | JTAG Reset Recovery | 50 | — | ns |
| $t_{JCD}$ | JTAG Data Output | — | 25 | ns |
| $t_{JDC}$ | JTAG Data Output Hold | 0 | — | ns |
| $t_{JS}$ | JTAG Setup | 15 | — | ns |
| $t_{JH}$ | JTAG Hold | 15 | — | ns |

5618 tbl 12

**NOTES:**
1. Guaranteed by design.
2. 30pF loading on external output signals.
3. Refer to AC Electrical Test Conditions stated earlier in this document.
4. JTAG operations occur at one speed (10MHz). The base device may run at any speed specified in this datasheet.

## Identification Register Definitions

| Instruction Field | Value | Description |
|---|---|---|
| Revision Number (31:28) | 0x0 | Reserved for version number |
| IDT Device ID (27:12) | 0x300 | Defines IDT part number |
| IDT JEDEC ID (11:1) | 0x33 | Allows unique identification of device vendor as IDT |
| ID Register Indicator Bit (Bit 0) | 1 | Indicates the presence of an ID register |

5618 tbl 13

## Scan Register Sizes

| Register Name | Bit Size |
|---|---|
| Instruction (IR) | 4 |
| Bypass (BYR) | 1 |
| Identification (IDR) | 32 |
| Boundary Scan (BSR) | Note (3) |

5618 tbl 14

## System Interface Parameters

| Instruction | Code | Description |
|---|---|---|
| EXTEST | 0000 | Forces contents of the boundary scan cells onto the device outputs(1). Places the boundary scan register (BSR) between TDI and TDO. |
| BYPASS | 1111 | Places the bypass register (BYR) between TDI and TDO. |
| IDCODE | 0010 | Loads the ID register (IDR) with the vendor ID code and places the register between TDI and TDO. |
| HIGHZ | 0100 | Places the bypass register (BYR) between TDI and TDO. Forces all device output drivers to a High-Z state. |
| CLAMP | 0011 | Uses BYR. Forces contents of the boundary scan cells onto the device outputs. Places the bypass register (BYR) between TDI and TDO. |
| SAMPLE/PRELOAD | 0001 | Places the boundary scan register (BSR) between TDI and TDO. SAMPLE allows data from device inputs(2) and outputs(1) to be captured in the boundary scan cells and shifted serially through TDO. PRELOAD allows data to be input serially into the boundary scan cells via the TDI. |
| RESERVED | All other codes | Several combinations are reserved. Do not use codes other than those identified above. |

5618 tbl 15

**NOTES:**
1. Device outputs = All device outputs except TDO.
2. Device inputs = All device inputs except TDI, TMS, TRST, and TCK.
3. The Boundary Scan Descriptive Language (BSDL) file for this device is available on the IDT website (www.idt.com), or by contacting your local IDT sales representative.

## Ordering Information

| XXXXX | A | 999 | A | A | A | A |
|---|---|---|---|---|---|---|
| Device Type | Power | Speed | Package | | Process/ Temperature Range | |

| | |
|---|---|
| Blank | Tube of Tray |
| 8 | Tape and Reel |
| Blank | Commercial (0°C to +70°C) |
| I(3) | Industrial (-40°C to +85°C) |
| G(4) | Green |
| BF | 208-pin fpBGA (BF208) |
| DR | 208-pin PQFP (DR208) |
| BC | 256-pin BGA (BC256) |
| 200 | Commercial Only(1) |
| 166 | Commercial & Industrial(2) |
| 133 | Commercial & Industrial |
| | Speed in Megahertz |
| S | Standard Power |
| 70V7519 | 9Mbit (256K x 36-Bit) Synchronous Bank-Switchable Dual-Port RAM |

5618 drw 22

**NOTES:**
1. Available in BC256 package only.
2. Industrial Temperature at 166Mhz not available in BF208 package.
3. Contact your local sales office for industrial temp range for other speeds, packages and powers.
4. Green parts available . For specific speeds, packages and powers contact your local sales office.
   LEAD FINISH (SnPb) parts are in EOL process. Product Discontinuation Notice - PDN# SP-17-02

## Datasheet Document History:

| | |
|---|---|
| 01/05/00: | Initial Public Offering |
| 10/19/01: | Page 2, 3 & 4 Added date revision for pin configurations |
| | Page 9 Changed $I_{SB3}$ values for commercial and industrial DC Electrical Characteristics |
| | Page 11 Changed $t_{OE}$ value in AC Electrical Characteristics, please refer to Errata #SMEN-01-05 |
| | Page 20 Increased $t_{JCD}$ from 20ns to 25ns, please refer to Errata #SMEN-01-04 |
| | Page 1 & 22 Replaced TM logo with ® logo |
| 01/11/02: | Page 2 Corrected BF-208 pinout configuration fpBGA A15 |
| 03/18/02: | Page 1, 9, 11 & 22 Added 200MHz specification |
| | Page 9 Tightened power numbers in DC Electrical Characteristics |
| | Page 14 Changed waveforms to show INVALID operation from opposite ports if $t_{CO}$ < minimum specified |
| | Page 1 - 22 Removed "Preliminary" status |
| 12/04/02: | Page 9, 11 & 22 Designated 200Mhz speed grade available in BC-256 package only |
| 01/16/04: | Page 11 Added byte enable setup time and byte enable hold time parameters and values to all speed grades in the AC Electrical Characteristics Table |
| 07/25/08: | Page 9 Corrected a typo in the DC Chars table |
| 01/29/09: | Page 22 Removed "IDT" from orderable part number |
| 06/04/15: | Page 1 Added Green availability to Features |
| | Page 2 , 3, 4 & 22 The package codes for BF-208 changed to BF208, BC-256 changed to BC256, and DR-208 changed to DR208 respectively to match the standard package codes |
| | Page 2 , 3 & 4 Removed the date from all of the pin configurations BF208, BC256 & DR208 |
| | Page 22 Added Green and T&R indicators and the correlating footnotes to Ordering Information |
| 06/22/18: | Product Discontinuation Notice - PDN# SP-17-02 |
| | Last time buy expires June 15, 2018 |

***CORPORATE HEADQUARTERS***
6024 Silver Creek Valley Road
San Jose, CA 95138

***for SALES:***
800-345-7015 or 408-284-8200
fax: 408-284-2775
www.idt.com

***for Tech Support:***
408-284-2794
DualPortHelp@idt.com

The IDT logo is a registered trademark of Integrated Device Technology, Inc.

# Mouser Electronics

Authorized Distributor

Click to View Pricing, Inventory, Delivery & Lifecycle Information:

IDT (Integrated Device Technology):
70V7519S133BCI 70V7519S133BFI 70V7519S133DRI 70V7519S166BF8 70V7519S166BC8 70V7519S200BC8 70V7519S166BC 70V7519S166BF 70V7519S166DR 70V7519S166DRI 70V7519S200BC 70V7519S166BCI 70V7519S133BC8 70V7519S133BF8 70V7519S133BFI8 70V7519S133DR 70V7519S133BC 70V7519S133BF 70V7519S133BCI8 70V7519S166BCI8 70V7519S200BCG8 70V7519S200BCG

# OCEAN CHIPS
## Океан Электроники
### Поставка электронных компонентов

Компания «Океан Электроники» предлагает заключение долгосрочных отношений при поставках импортных электронных компонентов на взаимовыгодных условиях!

Наши преимущества:

- Поставка оригинальных импортных электронных компонентов напрямую с производств Америки, Европы и Азии, а так же с крупнейших складов мира;
- Широкая линейка поставок активных и пассивных импортных электронных компонентов (более 30 млн. наименований);
- Поставка сложных, дефицитных, либо снятых с производства позиций;
- Оперативные сроки поставки под заказ (от 5 рабочих дней);
- Экспресс доставка в любую точку России;
- Помощь Конструкторского Отдела и консультации квалифицированных инженеров;
- Техническая поддержка проекта, помощь в подборе аналогов, поставка прототипов;
- Поставка электронных компонентов под контролем ВП;
- Система менеджмента качества сертифицирована по Международному стандарту ISO 9001;
- При необходимости вся продукция военного и аэрокосмического назначения проходит испытания и сертификацию в лаборатории (по согласованию с заказчиком);
- Поставка специализированных компонентов военного и аэрокосмического уровня качества (Xilinx, Altera, Analog Devices, Intersil, Interpoint, Microsemi, Actel, Aeroflex, Peregrine, VPT, Syfer, Eurofarad, Texas Instruments, MS Kennedy, Miteq, Cobham, E2V, MA-COM, Hittite, Mini-Circuits, General Dynamics и др.);

Компания «Океан Электроники» является официальным дистрибьютором и эксклюзивным представителем в России одного из крупнейших производителей разъемов военного и аэрокосмического назначения **«JONHON»**, а так же официальным дистрибьютором и эксклюзивным представителем в России производителя высокотехнологичных и надежных решений для передачи СВЧ сигналов **«FORSTAR»**.

AVIC JONHON

**«JONHON»** (основан в 1970 г.)

Разъемы специального, военного и аэрокосмического назначения:

(Применяются в военной, авиационной, аэрокосмической, морской, железнодорожной, горно- и нефтедобывающей отраслях промышленности)

**«FORSTAR»** (основан в 1998 г.)

ВЧ соединители, коаксиальные кабели, кабельные сборки и микроволновые компоненты:

(Применяются в телекоммуникациях гражданского и специального назначения, в средствах связи, РЛС, а так же военной, авиационной и аэрокосмической отраслях промышленности).

FORSTAR®

Телефон: 8 (812) 309-75-97 (многоканальный)
Факс: 8 (812) 320-03-32
Электронная почта: ocean@oceanchips.ru
Web: http://oceanchips.ru/
Адрес: 198099, г. Санкт-Петербург, ул. Калинина, д. 2, корп. 4, лит. А