# HS35 Incremental Optical Encoder

BEI SENSORS

The HS35 combines the rugged, heavy-duty features usually associated with shafted encoders into a hollow shaft style. Its design includes dual bearings and shaft seals for NEMA 4, 13 and IP65 environmental ratings, a rugged metal housing, and a sealed connector or cable gland. The HS35 accommodates shafts up to 1" in diameter. With optional insulating inserts, it can be mounted on smaller diameter shafts. It can be mounted on a through shaft or a blind shaft with a closed cover to maintain its environmental rating. The HS35 is also available with a dual output option (inset) to provide redundant encoder signals, dual resolutions, or to supply two separate controllers from a single encoder. Applications include motor feedback and vector control, printing industries, robotic control, oil service industries, and web process control.

**The HS35 Dual Output Encoder**

The HS35 Incremental Encoder is available with the following certifications:

- EN 55011 and EN 61000-6-2
- CSA Class I, Div 1 Group C&D
- CENELEC EEX ia IIC T4
- U.S. Standards Class I, Group A,B,C & D; Class II Group E,F & G
- Canadian Standards Class I, Zone 0, Group IIC
- Groups: A, B, C, D, F & G

## Mechanical Specifications

**Shaft Bore:** 1.00", 0.875", 0.750", 0.625", 0.500". All are supplied with insulating sleeves.
**Allowable Misalignment:** 0.005" T.I.R. on mating shaft 0.75" from shaft end
**Bore Runout:** 0.001" T.I.R maximum
**Starting Torque at 25°C:** Through shaft version (SS) = 7 in-oz (max); Blind shaft version (BS) = 4 in-oz (max)
**Bearings:** 52100 SAE High carbon steel
**Shaft Material:** 416 stainless steel
**Bearing Housing:** Die cast aluminum with protective finish
**Cover:** Die cast aluminum with protective finish
**Bearing Life:** 7.5 X $10^9$ revs (50,000 hrs at 2500 RPM)
**Maximum RPM:** 6,000 RPM (see Frequency Response below)
**Moment of Inertia:** 0.019 oz-in-$sec^2$
**Weight:** 18 oz typical

## Electrical Specifications

**Code:** Incremental
**Output Format:** 2 channels in quadrature, 1/2 cycle index gated with negative B channel
**Cycles Per Shaft Turn:** 1 to 80,000 (see table A, page 25). For resolutions above 5000 see interpolation options on pages 36 and 37
**Supply Voltage:** 5 to 28 VDC available (see note 5)
**Current Requirements:** 100 mA typical + output load, 250 mA (max)
**Voltage/Output:** (see note 5)
15V/V: Line Driver, 5–15 VDC in, $V_{out} = V_{in}$
28V/V: Line Driver, 5–28 VDC in, $V_{out} = V_{in}$
28V/5: Line Driver, 5–28 VDC in, $V_{out} = 5$ VDC
28V/OC: Open Collector, 5–28 VDC in, $OC_{out}$
**Protection Level:** Reverse, overvoltage and output short circuit (See note 5)
**Frequency Response:** 150 kHz (up to 5000 cpt resolution; 300 KHz above 5000 cpt, also see note 7)
**Output Terminations:** See table 1 page 65
**Note:** Consult factory for other electrical options

## Environmental Specifications

**Enclosure Rating:** NEMA 4 & 13 (IP65) when ordered with shaft seal (on units with an MS connector) or a cable gland (on units with cable termination)
**Temperature:** Operating, 0º to 70º C; extended temperature testing up to 105º C available (see note 8); Storage, -25º to 90º C unless extended temperature option called out
**Shock:** 50 g's for 11 msec duration
**Vibration:** 5 to 2000 Hz @ 20 g's
**Humidity:** 98% RH without condensation
**NOTES & TABLES:** All notes and tables referred to in the text can be found on the back of this page.

## HS35 Incremental Ordering Options

FOR ASSISTANCE CALL 800-350-2727

Use this diagram, working from left to right to construct your model number (example: **HS35F-100- R1-SS-2048-ABZC-28V/V-SM18**).
**All notes and tables referred to can be found on the back of this page.**

[ ] **HS35** [ ] – [ ] – [ ] – [ ] – [ ] – [ ] [ ] – [ ] – [ ] – [ ] [ ]

X = Express Encoder

**TYPE:**
HS = Hollow Shaft
35 = 3.5" Encoder Diameter

**HOUSING CONFIG:**
F = Standard

**SHAFT BORE:**
100 = 1.00"
87 = 0.875"
75 = 0.75"
62 = 0.625"
50 = 0.50"etc.
Metric bores available

**TETHER:**
R1 = Tether Block and Pin
R2 = Tether Arm
Blank = None

**SHAFT SEAL CONFIGURATION:**
SS =Through Shaft Rubber Seals
BS = Blind Shaft Rubber Seal
FS = Through Shaft Felt Seals
BFS = Blind Shaft Felt Seal
*See Note 2*

**CYCLES PER TURN:**
(Enter Cycles)
*See table A on back page*

**NO. OF CHANNELS:**
ABZ *See note 3*

**VOLTAGE/OUTPUT:**
15V/V = 5–15$V_{in}$/out
28V/V = 5–28$V_{in}$/out
28V/5 = 5–28$V_{in}$/5Vout
28V/OC = 5–28$V_{in}$/$OC_{out}$
*See note 5*

**COMPLEMENTS:**
C = Complementary Outputs
*See note 4*

**OUTPUT TERMINATION:**
M12 = MS3112E12-10P, M16 = MS3102R16S-1P
M18 = MS3102R18-1P
*(Indicate "S" for single or "D" for Dual (i.e. DM18 = Dual)*
SCS = Shielded, Jacketed Cable with cable gland seal and cable length in inches. (i.e. SCS18 = 18 inches)
TB = Terminal Block *(See table 1 & note 9)*

**HAZARDOUS AREA RATINGS:**
EX = Intrinsically Safe
NI = Non-Incendive
Blank = None

**SPECIAL FEATURES:**
S = Special features specified on purchase order (consult factory)
*See note 6*

**EXPRESS ENCODERS®**
Items highlighted with [ ] are standard Express Encoders and ship in one to three days.
**T2** option is available as a standard HS35 Express Encoder.

BEI SENSORS
Tel: 805-968-0782 /800-350-2727 | Fax: 805-968-3154 / 800-960-2726
7230 Hollister Ave., Goleta, CA 93117-2807 | **www.beisensors.com**

Specification No. 02063-001 Rev.09-12

These commodities, technology or software if exported from the United States must be in accordance with the Bureau of Industry, and Security, Export Administration regulations. Diversion contrary to U.S law is prohibited.

# Dimensions

MS Connector Termination

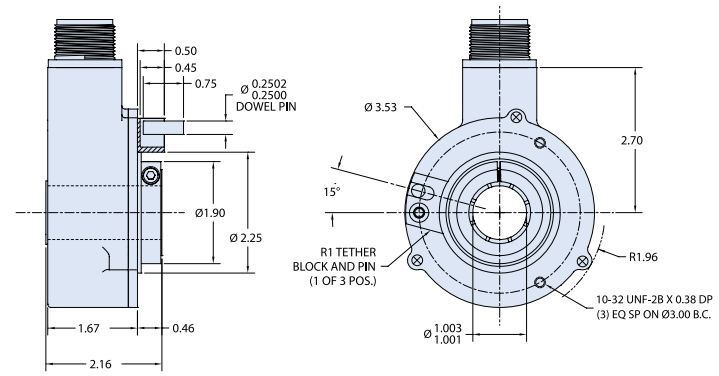


R1 Tether Block and Pin

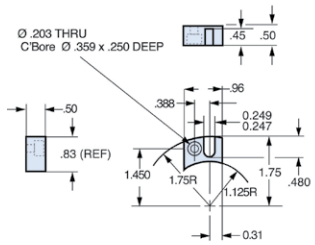


R2 Tether Arm

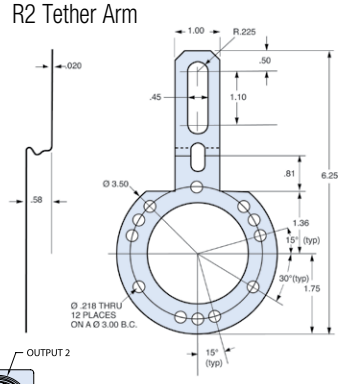


Dual Output

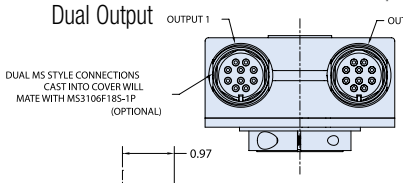


Cable Termination

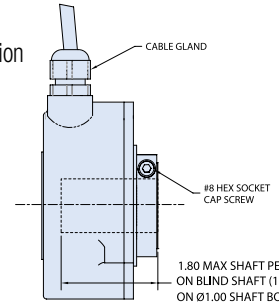


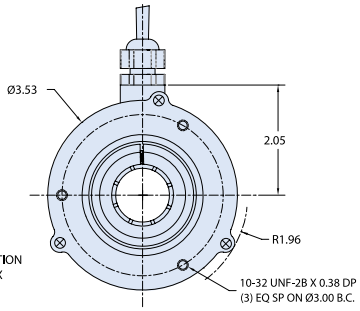


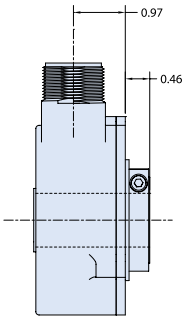


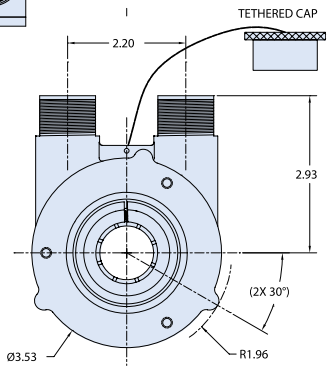


# Table 1

Incremental Output Terminations

The connector style will determine inouts. For example, an encoder with ABC channels and an M18 connector uses the table to the right.

| M18 CONNECTOR | |
|---|---|
| PIN | CHANNEL |
| A | A |
| B | B |
| C | Z |
| D | +V |
| E | — |
| F | 0V |
| G | CG |
| H | $\overline{A}$ |
| I | $\overline{B}$ |
| J | $\overline{Z}$ |

| M12 CONNECTOR | |
|---|---|
| PIN | CHANNEL |
| A | A |
| B | B |
| C | Z |
| D | +V |
| E | — |
| F | 0V |
| G | CG |
| H | $\overline{A}$ |
| J | $\overline{B}$ |
| K | $\overline{Z}$ |

| M16 CONNECTOR | CHANNELS DESIGNATED IN MODEL NO. | |
|---|---|---|
| PIN | ABZ | ABC |
| A | A | A |
| B | B | B |
| C | Z | $\overline{A}$ |
| D | +V (SUPPLY VOLTAGE) | |
| E | — | $\overline{B}$ |
| F | 0 V (CIRCUIT COMMON) | |
| G | CASE GROUND (CG) (except H20) | |

| WIRE COLOR (22AWG) | DA 15P CONNECTOR | CHANNELS DESIGNATED IN MODEL NO. | | |
|---|---|---|---|---|
| | | ABZ | ABC | ABZC |
| YEL | 13 | A | A | A |
| BLUE | 14 | B | B | B |
| ORN | 15 | Z | — | Z |
| W-Yel | 10 | — | $\overline{A}$ | $\overline{A}$ |
| W-Blu | 11 | — | $\overline{B}$ | $\overline{B}$ |
| W-Orn | 12 | — | — | $\overline{Z}$ |
| RED | 6 | +V (SUPPLY VOLTAGE) | | |
| BLK | 1 | 0 V (CIRCUIT COMMON) | | |
| GRN | 9 | CASE GROUND (CG) (except H20) | | |
| WHITE | | SHIELD DRAIN (Shielded Cable Only) | | |

BEI SENSORS

Tel: 805-968-0782 / 800-350-2727 | Fax: 805-968-3154 / 800-960-2726
7230 Hollister Ave., Goleta, CA 93117-2807 | **www.beisensors.com**

These commodities, technology or software if exported from the United States must be in accordance with the Bureau of Industry, and Security, Export Administration regulations. Diversion contrary to U.S law is prohibited.

# Figure 1

Output Waveform

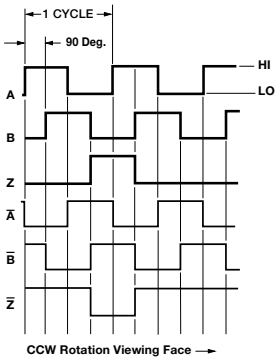


**NOTE: Index location is displaced 180° (mechanical) on second output with dual output option.**

# Table A

HS35 Disc Resolutions

32 100 250 360 420 500 512 600 720 1000 1024 1200 1500 1650 1800 2000 2100 2048 2500 2881 2884 3600 3710 4096 5000

For interpolation please specify the multiplied output (up to 80,000 for the HS35) in the model number, i.e. 80,000-T16. Other resolutions available–consult factory.

**NOTE: Dual resolutions available, consult factory.**

# Notes

**1.** Mounting is usually done either using the D-style square flange mount, E- or G-style servo mounts, or one of the standard face mounts, F1 for example. Consult factory for additional face mount options.

**2.**The rubber shaft seal is recommended in virtually all installations. The most common exceptions are applications requiring a very low starting torque or those requiring operation at both high temperature and high speed. For these exceptions, a felt shaft seal is recommended. Felt seals require very low starting torque and can virtually eliminate frictional heat. Encoders ordered with felt shaft seals will have an enclosure rating of IP50 and will have less than 1/10th the Starting Torque specified under Mechanical Configurations.

**3.** Non-standard index widths and multiple indices are available by special order. Consult factory.

**4.** Complementary outputs are recommended for use with line driver type (source/sink) outputs. When used with differential receivers, this combination provides a high degree of noise immunity.

**5. Output IC's:** Output IC's are available as either Line Driver (LD) or NPN Open Collector (OC) types. Open Collectors require pull-up resistors, resulting in higher output source impedance (sink impedance is similar to that of line drivers). In general, use of a Line Driver style output is recommended. Line Drivers source or sink current and their lower impedance mean better noise immunity and faster switching times. **Warning:** Do not connect any line driver outputs directly to circuit common/0V, which may damage the driver. Unused outputs should be isolated and left floating. Our applications specialists would be pleased to discuss your system requirements and the compatibility of your receiving electronics with Line Driver type outputs.

**28V/V:** Multi-voltage Line Driver (7272*): 100 mA source/sink. Input voltage 5 to 28 VDC +/- 5% standard (Note: $V_{out} = V_{in}$). This driver is TTL compatible when used with 5 volt supply. Supply lines are protected against overvoltage to 60 volts and reverse voltage. Outputs are short circuit protected for one minute. Supply current is 120 mA typical (plus load current). This is the recommended replacement for 3904R and 7406R open collector outputs with internal pullup resistors. It is also a direct replacement for any 4469, 88C30, 8830 or 26LS31 line driver

**28V/5:** Multi-voltage Line Driver (7272*): 100 mA source/sink. Input voltage 5 to 28 VDC +/- 5% standard, internally regulated with 5V (TTL compatible) logic out. Supply lines are protected against overvoltage to 60 volts and reverse voltage. Outputs are short circuit protected for one minute. Supply current is 90 mA typical (plus load current).

**15V/V:** Multi-voltage Line Driver (4469*): 100 mA source/sink. Input voltage 5 to 15 VDC +/- 5% standard (Note: $V_{out} = V_{in}$). TTL compatible when used with 5 volt supply. Supply lines are protected against overvoltage to 60 volts and reverse voltage. Outputs are short circuit protected for one minute. Supply current is 90 mA typical (plus load current). This is a direct replacement for the 4469 Line Driver.

**28V/OC:** NPN Open Collector (3904*, 7273*). Current sink of 80 mA max. Current sourced by external pull- up resistor. Output can be pulled up to voltage other than supply voltage (30 V max). Input voltage 5 to 28 VDC +/- 5% standard. Supply current is 120 mA typical. This replaces prior IC's with designations of 3904, 7406, 3302, 681 and 689. **5V/OCR, 15V/OCR, 24V/OCR:** Open Collector (3904R*, 7406R*, 7273R*): Current sink of 70 mA max. Includes internal pull-ups sized at approximately 100 ohms/volt. Max current source is 10 mA. Supply current is 100 mA typical, 120 mA with internal pull-ups. The 5V/OCR, 15V/OCR and 24V/OCR are often replaced by the 28V/V in system upgrades. **3904, 3904R, 4469, 5V/V, 5V/OC, 5V/OCR, 9V/OC:** Intrinsically safe line driver and open collector outputs. These drivers are specific to intrinsically safe encoders, and are installed per the appropriate control drawings listed in Table 2.1 on page 48.

**6.** Special –S at the end of the model number is used to define a variety of non-standard features such as special shaft lengths, voltage options, or special testing. Please consult the factory to discuss your special requirements.

**7.** Higher frequency response may be available. Please consult with the factory.

**8.** Extended temperature ratings are available in the following ranges:
-40 to 70°C, -40 to 85°C, –20 to 105°C and –40 to 105°C depending on the particular model. Some models can operate down to -55°C. Extended temperature ranges can affect other performance factors. Consult with factory for more specific information.

**9.** Mating straight plug receptacles may be ordered from the factory:
For M12 use MS3116F12-10S
For M14 use MS3106F14S-6S
For M14/19 use MS3116J14-19S
For M16 use MS3106F16S-1S
For M18 use MS3106F18-1S
For M20 use MS3106F20-29S

# OCEAN CHIPS
## Океан Электроники
### Поставка электронных компонентов

Компания «Океан Электроники» предлагает заключение долгосрочных отношений при поставках импортных электронных компонентов на взаимовыгодных условиях!

Наши преимущества:

- Поставка оригинальных импортных электронных компонентов напрямую с производств Америки, Европы и Азии, а так же с крупнейших складов мира;
- Широкая линейка поставок активных и пассивных импортных электронных компонентов (более 30 млн. наименований);
- Поставка сложных, дефицитных, либо снятых с производства позиций;
- Оперативные сроки поставки под заказ (от 5 рабочих дней);
- Экспресс доставка в любую точку России;
- Помощь Конструкторского Отдела и консультации квалифицированных инженеров;
- Техническая поддержка проекта, помощь в подборе аналогов, поставка прототипов;
- Поставка электронных компонентов под контролем ВП;
- Система менеджмента качества сертифицирована по Международному стандарту ISO 9001;
- При необходимости вся продукция военного и аэрокосмического назначения проходит испытания и сертификацию в лаборатории (по согласованию с заказчиком);
- Поставка специализированных компонентов военного и аэрокосмического уровня качества (Xilinx, Altera, Analog Devices, Intersil, Interpoint, Microsemi, Actel, Aeroflex, Peregrine, VPT, Syfer, Eurofarad, Texas Instruments, MS Kennedy, Miteq, Cobham, E2V, MA-COM, Hittite, Mini-Circuits, General Dynamics и др.);

Компания «Океан Электроники» является официальным дистрибьютором и эксклюзивным представителем в России одного из крупнейших производителей разъемов военного и аэрокосмического назначения **«JONHON»**, а так же официальным дистрибьютором и эксклюзивным представителем в России производителя высокотехнологичных и надежных решений для передачи СВЧ сигналов **«FORSTAR»**.

AVIC JONHON

**«JONHON»** (основан в 1970 г.)

Разъемы специального, военного и аэрокосмического назначения:

(Применяются в военной, авиационной, аэрокосмической, морской, железнодорожной, горно- и нефтедобывающей отраслях промышленности)

**«FORSTAR»** (основан в 1998 г.)

ВЧ соединители, коаксиальные кабели, кабельные сборки и микроволновые компоненты:

(Применяются в телекоммуникациях гражданского и специального назначения, в средствах связи, РЛС, а так же военной, авиационной и аэрокосмической отраслях промышленности).

FORSTAR®

Телефон: 8 (812) 309-75-97 (многоканальный)
Факс: 8 (812) 320-03-32
Электронная почта: ocean@oceanchips.ru
Web: http://oceanchips.ru/
Адрес: 198099, г. Санкт-Петербург, ул. Калинина, д. 2, корп. 4, лит. А