mikromedia™
for STM32®

Compact multimedia development system rich with on-board peripherals for all-round development on STM32F207VGT6 and STM32F407VGT6 devices

MikroElektronika
DEVELOPMENT TOOLS | COMPILERS | BOOKS

ARM cortex

TO OUR VALUED CUSTOMERS

I want to express my thanks to you for being interested in our products and for having confidence in MikroElektronika.

The primary aim of our company is to design and produce high quality electronic products and to constantly improve the performance thereof in order to better suit your needs.

Nebojsa Matic
General Manager

The STM32®, ARM® and Windows® logos and product names are trademarks of STMicroelectronics®, ARM® Holdings and Microsoft® in the U.S.A. and other countries.

Table of Contents

Introduction to mikromedia for STM32® 4
Package Contains 5
Key Features 6
System Specification 7
1. Power supply 8
USB power supply 8
Battery power supply 8
2. Key microcontrollers features 10
STM32F207VGT6 10
STM32F407VGT6 11
3. Programming the microcontroller 12
Programming with mikroBootloader 14
step 1 - Connecting mikromedia 14
step 2 - Browsing for .hex file 15
step 3 - Selecting .hex file 15
step 4 - Uploading .hex file 16
step 5 - Finish upload 17
Programming with mikroProg™ programmer 18
mikroProg Suite™ for ARM® Software 19
Programming with ST-LINK V2 programmer 20
4. Reset buttons 22
5. Oscillators 24
6. MicroSD Card Slot 25
7. Touch Screen 26
8. Audio Module 28
9. USB connection 30
10. Accelerometer 32
11. Flash Memory 33
12. Pads 34
13. Pinout 35
14. Dimensions 36
15. Mikromedia Accessories 37
16. What's Next 38

Introduction to mikromedia for STM32®

The **mikromedia for STM32®** is a compact development system with lots of on-board peripherals which allow development of devices with multimedia contents. The central part of the system is a 32-bit **STM32F207VGT6** or **STM32F407VGT6** microcontroller. The mikromedia for STM32® features integrated modules such as stereo MP3 codec, **TFT 320x240** touch screen display, accelerometer, USB connector, MMC/SD card slot, 8 Mbit flash memory, 2x26 connection pads and other. It comes pre-programmed with USB bootloader, but can also be programmed with external programmers, such as mikroProg™ for STM32® or ST-LINK. Mikromedia is compact and slim, and perfectly fits in the palm of the hand, which makes it convenient platform for mobile devices.

Package Contains

01 Damage resistant protective box

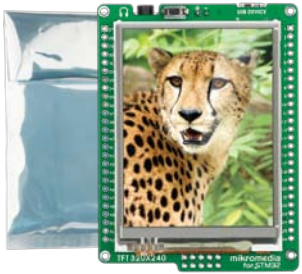

02 mikromedia for STM32® development system

03 DVD with documentation and examples

04 mikromedia for STM32® user's guide

05 mikromedia for STM32® schematics

06 USB cable and ST-LINK V2 to mikroProg™ adapter

Key Features

01 Connection Pads
02 TFT 320x240 display
03 USB MINI-B connector
04 Charge indication LED
05 LI-Polymer battery connector
06 3.5mm headphone connector
07 Power supply regulator
08 Crystal oscillator
09 VS1053 Stereo mp3 coder/decoder
10 RESET button
11 STM32F207VGT6 or STM32F407VGT6 microcontroller
12 Accelerometer
13 Serial Flash memory
14 microSD Card Slot
15 Power indication LED
16 JTAG/SWD programmer connector

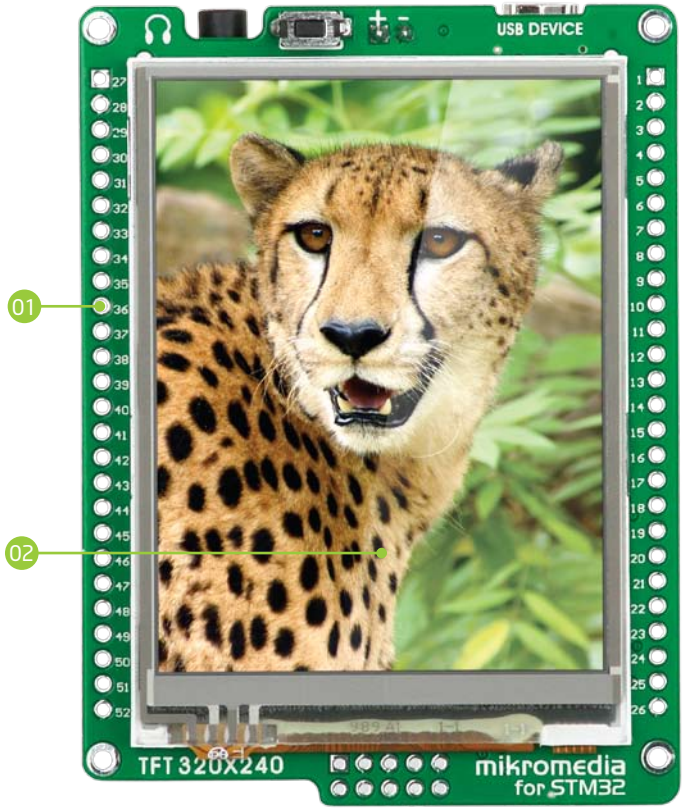

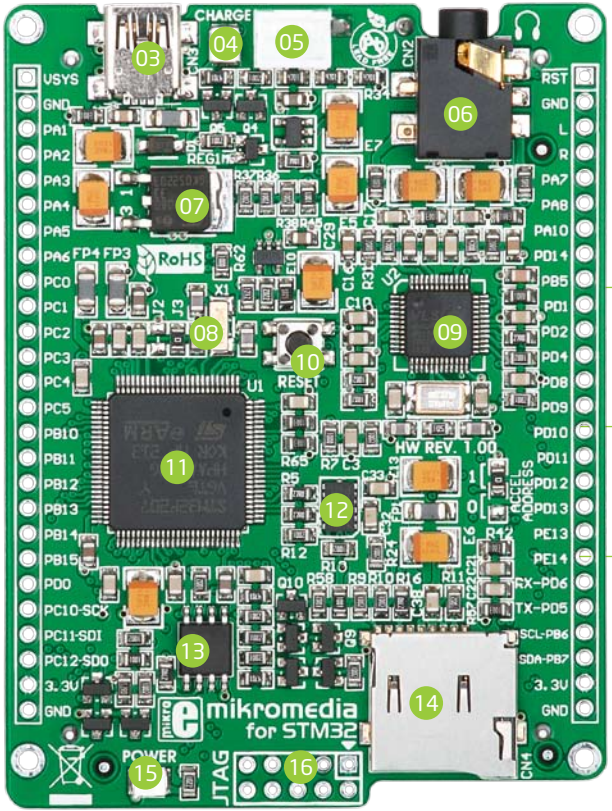

System Specification

power supply

Via USB cable (5V DC)

power consumption

46.5 mA with erased MCU

(when on-board modules are inactive)

board dimensions

81.2 x 60.5 mm (3.19 x 2.38 inch)

weight

~45 g (0.10 lbs)

1. Power supply

Figure 1-1: Connecting USB power supply

USB power supply

You can apply power supply to the board using **MINI-B USB** cable provided with the board. On-board voltage regulators provide the appropriate voltage levels to each component on the board. **Power LED (GREEN)** will indicate the presence of power supply.

Battery power supply

You can also power the board using **Li-Polymer** battery, via on-board battery connector. On-board circuit **MCP73832** enables you to charge the battery over USB connection. **LED diode (RED)** will indicate battery charging. Led is off when battery is full. Charging current is ~250mA and charging voltage is 4.2V DC.

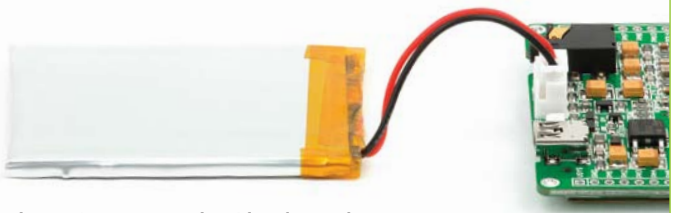

Figure 1-2: Connecting Li-Polymer battery

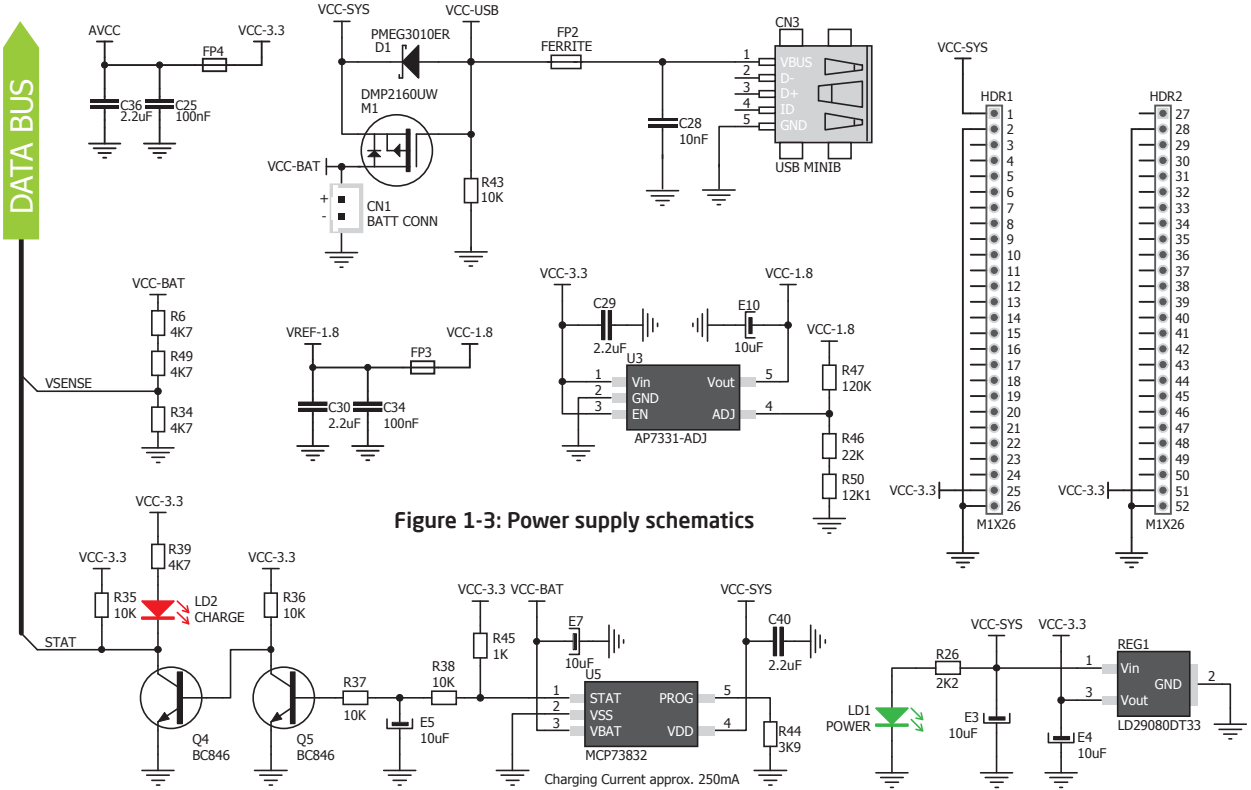

Figure 1-3: Power supply schematics

2. Key microcontrollers features

The mikromedia for STM32® M3 development system comes with the **STM32F207VGT6** microcontroller. This high-performance **32-bit** microcontroller with its integrated modules and in combination with other on-board modules is ideal for multimedia applications.

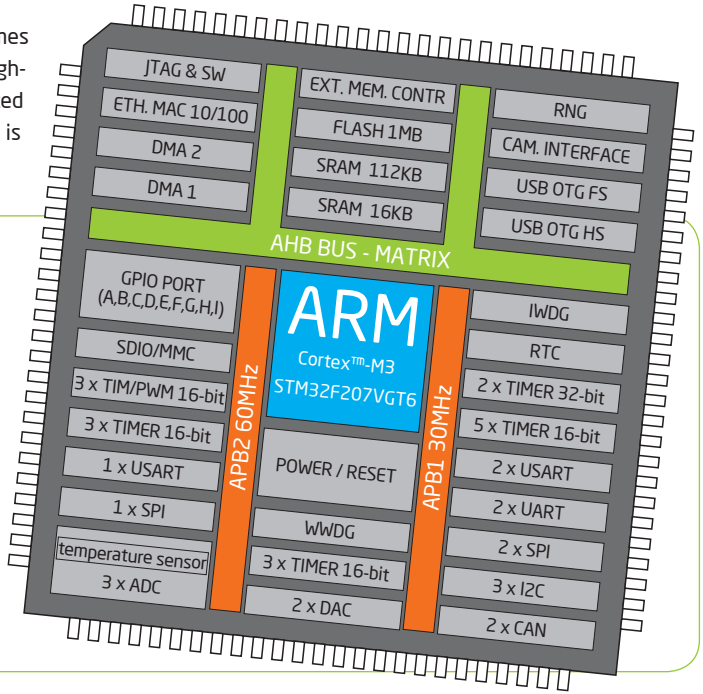

STM32F207VGT6

- 1.25 DMIPS/MHz, 32-bit Cortex™-M3 Core;
- 1 Mbyte Flash memory;
- 128 + 4 Kbytes of SRAM;
- 83 I/O pins;
- SPI, I2C, CAN, USB, Ethernet;
- USART, UART
- 16-bit and 32-bit Timers, up to 120Mhz;
- Internal Oscillator 16MHz, 32kHz, PLL;
- ADC, DAC, etc.

The mikromedia for STM32® M4 development system comes with the **STM32F407VGT6** microcontroller, which can deliver even more processing power. With up to 168MHz operation, this **32-bit** microcontroller with other on-board modules is a perfect choice for performance-demanding applications.

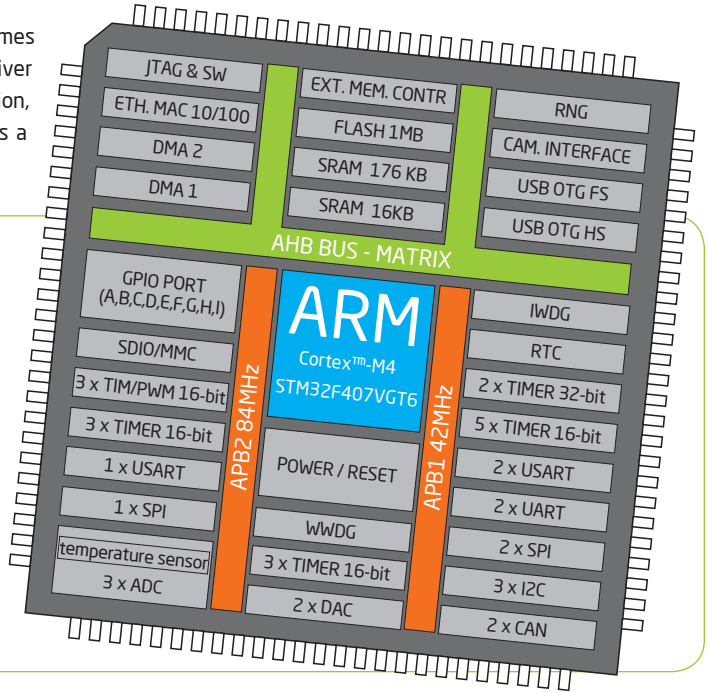

STM32F407VGT6

- 1.25 DMIPS/MHz, 32-bit Cortex™-M4 Core;
- 1 Mbyte Flash memory;
- 192 + 4 Kbytes of SRAM;
- 83 I/O pins;
- SPI, I2C, CAN, USB, Ethernet;
- USART, UART
- 16-bit and 32-bit Timers, up to 168Mhz;
- Internal Oscillator 16MHz, 32kHz, PLL;
- ADC, DAC, etc.

3. Programming the microcontroller

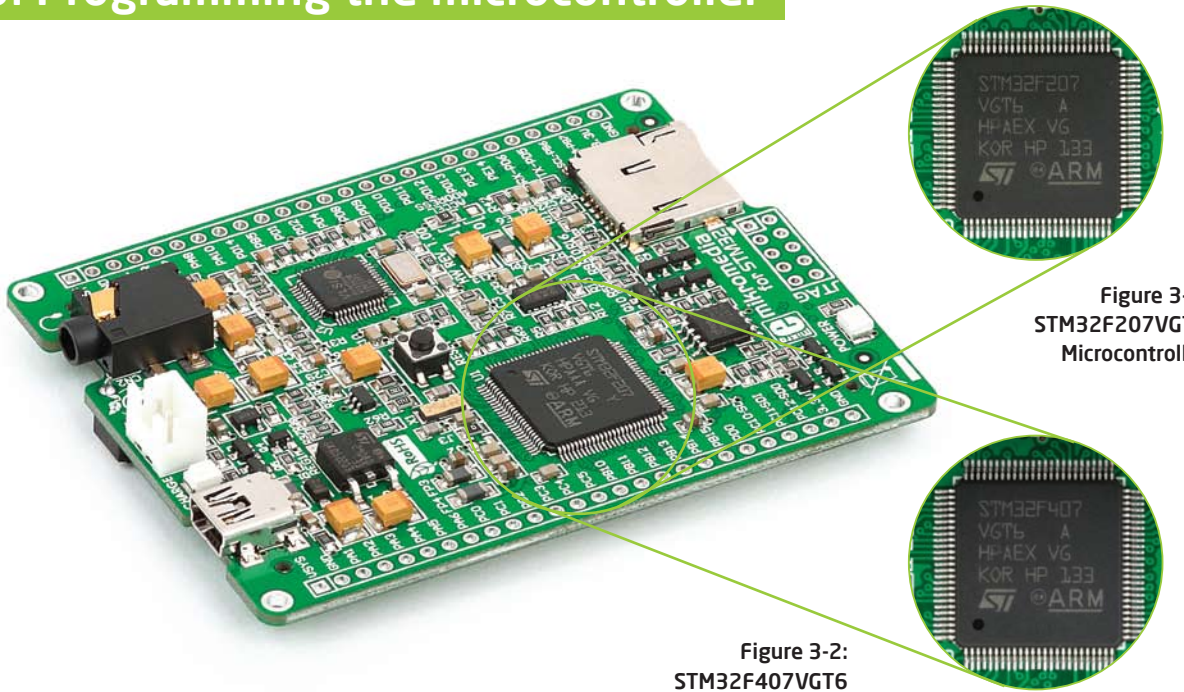

Figure 3-1:
STM32F207VGT6
Microcontroller

Figure 3-2:
STM32F407VGT6
Microcontroller

The microcontroller can be programmed in three ways:

01 Via USB mikroBootloader

02 Using external mikroProg™ programmer

03 Using external ST-LINK V2™ programmer

The mikromedia for STM32® development system can be programmed in three different ways. 01 Using bootloader which is pre-programmed into device by default or via external programmers (02 mikroProg™ or 03 ST-LINK V2™) .

Programming with mikroBootloader

You can program the microcontroller with bootloader which is pre-programmed into the device by default. To transfer .HEX file from a PC to MCU you need bootloader software (**mikroBootloader USB HID**) which can be downloaded from:

http://www.mikroe.com/eng/products/view/853/mikromedia-for-stm32/

After software is downloaded unzip it to desired location and start mikroBootloader USB HID software.

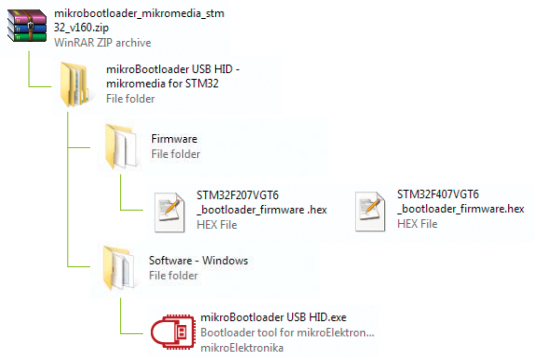

step 1 - Connecting mikromedia

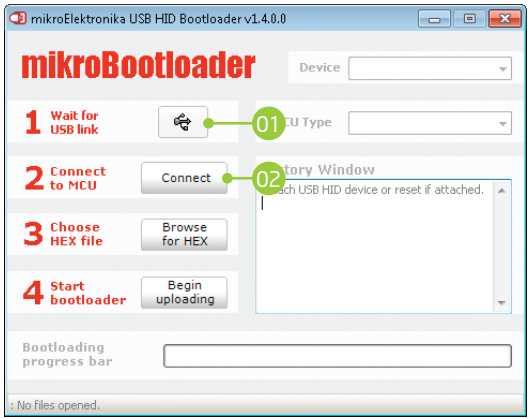

Figure 3-3: USB HID mikroBootloader window

01 To start, connect the USB cable, or if already connected press the **Reset** button on your mikromedia board. Click the **"Connect"** button within 5s to enter the bootloader mode, otherwise existing microcontroller program will execute.

step 2 - Browsing for .HEX file

Figure 3-4: Browse for HEX

01 Click the **"Browse for HEX"** button and from a pop-up window (Figure 3.5) choose the .HEX file which will be uploaded to MCU memory.

step 3 - Selecting .HEX file

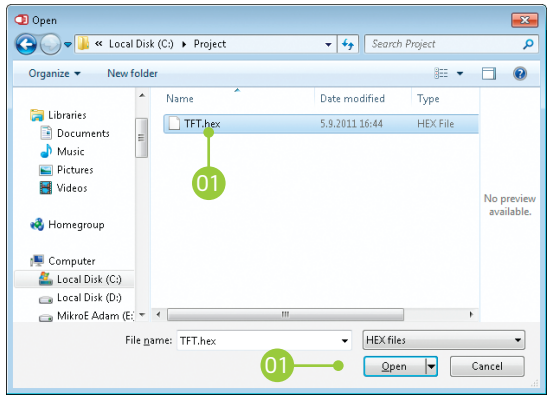

Figure 3-5: Selecting HEX

01 Select .HEX file using open dialog window.

02 Click the **"Open"** button.

step 4 - Uploading .HEX file

Figure 3-6: Begin uploading

01 To start .HEX file bootloading click the **"Begin uploading"** button.

Figure 3-7: Progress bar

01 You can monitor .HEX file uploading via progress bar

step 5 - Finish upload

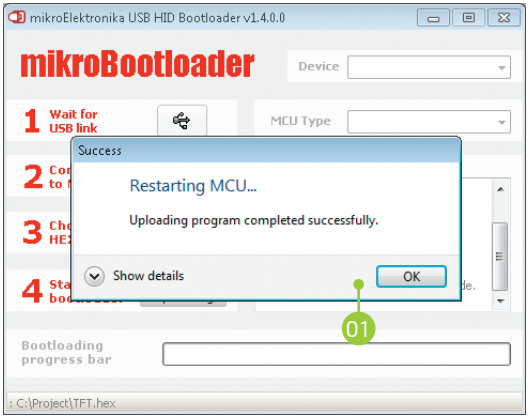

Figure 3-8: Restarting MCU

Figure 3-9: mikroBootloader ready for next job

01 Click the **"OK"** button after uploading is finished and wait for 5 seconds. Board will automatically reset and your new program will execute.

Programming with mikroProg™ programmer

The microcontroller can be programmed with external **mikroProg™ for STM32® programmer** and **mikroProg Suite™ for ARM®** software. The mikroProg™ programmer is connected to the development system via the CN5 (JTAG) connector. You can choose between two ways to program microcontrollers , **Figure 3-14**:

01 Via JTAG interface

02 Via Serial wire debug (SWD) interface

Figure 3-10: Connecting mikroProg™ to mikromedia™

mikroProg™ is a fast USB 2.0 programmer with mikroICD™ hardware In-Circuit Debugger. It supports over 180 ARM® Cortex™ M3 and Cortex™ M4 microcontrollers from STM32® family. Outstanding performance, easy operation and elegant design are it's key features.

NOTE: *Before attaching the programming connector, you have to solder the provided 2x5 male header to the JTAG pads (CN5)*

mikroProg Suite™ for ARM® Software

On-board mikroProg™ programmer requires special programming software called mikroProg Suite™ for ARM®. This software is used for programming of all supported microcontroller families with ARM® Cortex™-M3 and Cortex™-M4 cores. Software has intuitive interface and SingleClick™ programming technology. To begin, first locate the installation archive on the Product DVD:

DVD://download/eng/software/development-tools/arm/mikroprog/mikroprog_suite_for_arm_v110.zip

After downloading, extract the package and double click the executable setup file, to start installation.

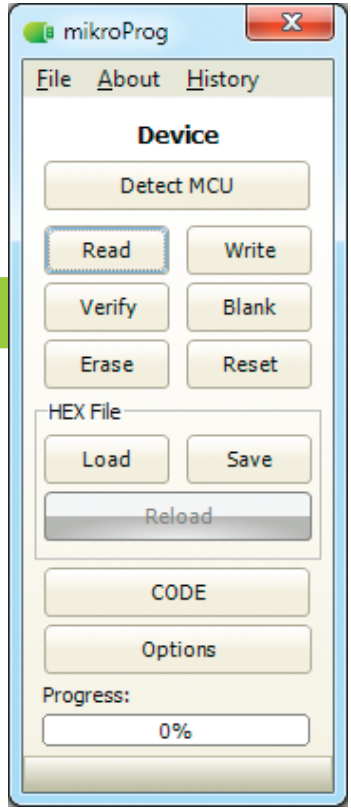

Figure 3-11: mikroProg Suite™ for ARM® window

Quick Guide

01 Click the **Detect MCU button** in order to recognize the device ID.

02 Click the **Read button** to read the entire microcontroller memory. You can click the **Save button** to save it to target HEX file.

03 If you want to write the HEX file to the microcontroller, first make sure to load the target HEX file. You can drag-n-drop the file onto the software window, or use the **Load button** to open Browse dialog and point to the HEX file location. Then click the **Write button** to begin programming.

Programming with ST-LINK V2 programmer

The microcontroller can be also programmed with **ST-LINK V2 programmer** and **mikroProg Suite™ for ARM®** software, **Figure 3-11** . This programmer connects with mikromedia board via **mikroProg to ST-LINK V2 adapter.**

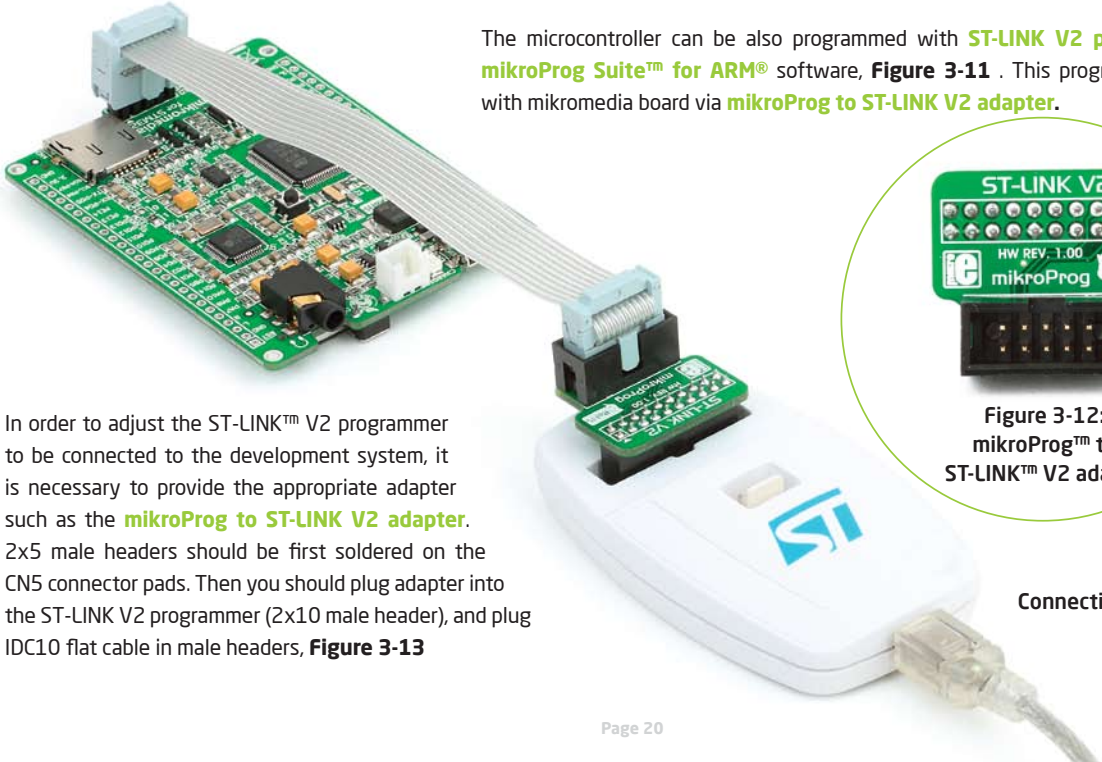

Figure 3-12: mikroProg™ to ST-LINK™ V2 adaper

Figure 3-13: Connecting ST-LINK™ V2 programmer

In order to adjust the ST-LINK™ V2 programmer to be connected to the development system, it is necessary to provide the appropriate adapter such as the **mikroProg to ST-LINK V2 adapter**. 2x5 male headers should be first soldered on the CN5 connector pads. Then you should plug adapter into the ST-LINK V2 programmer (2x10 male header), and plug IDC10 flat cable in male headers, **Figure 3-13**

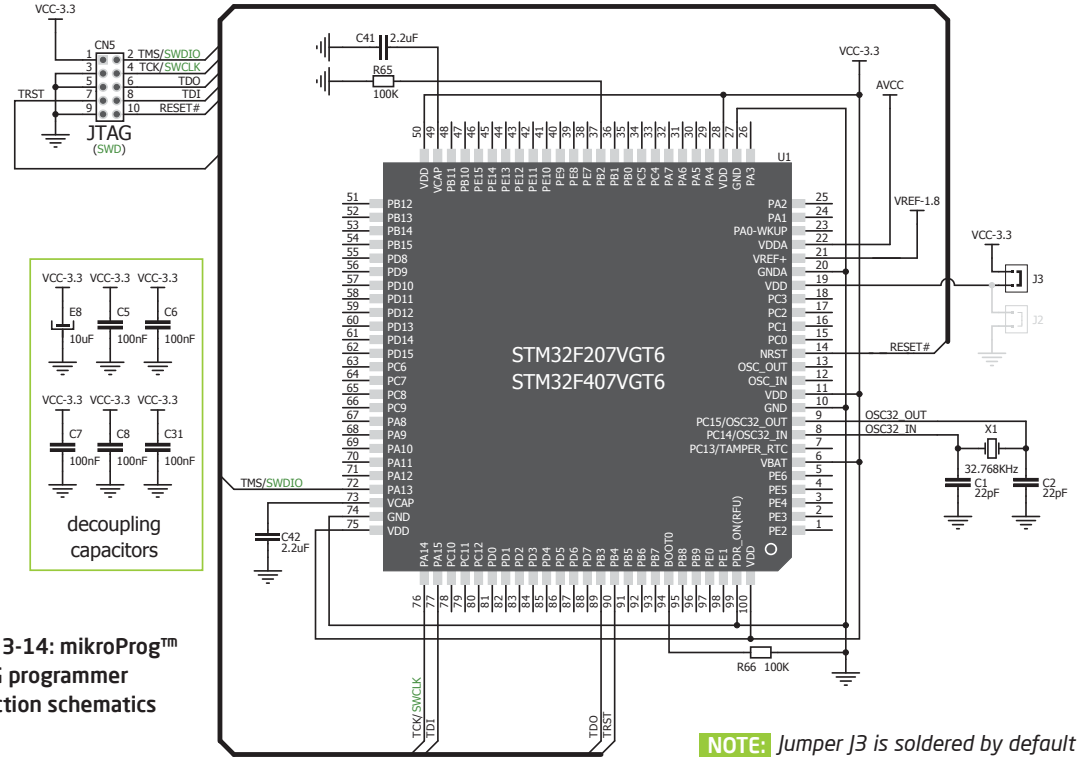

Figure 3-14: mikroProg™ or JTAG programmer connection schematics

NOTE: *Jumper J3 is soldered by default*

4. Reset Buttons

Board is equipped with two reset buttons. First is located at the back side of the board (**Figure 4-1**), and second one is at the top of the front side (**Figure 4-2**). If you want to reset the circuit, press either of two buttons. It will generate low voltage level on microcontroller reset pin (input). In addition, a reset can be externally provided through **pin 27** on side headers (**Figure 4-3**).

NOTE: *Do not press the reset buttons during programming*

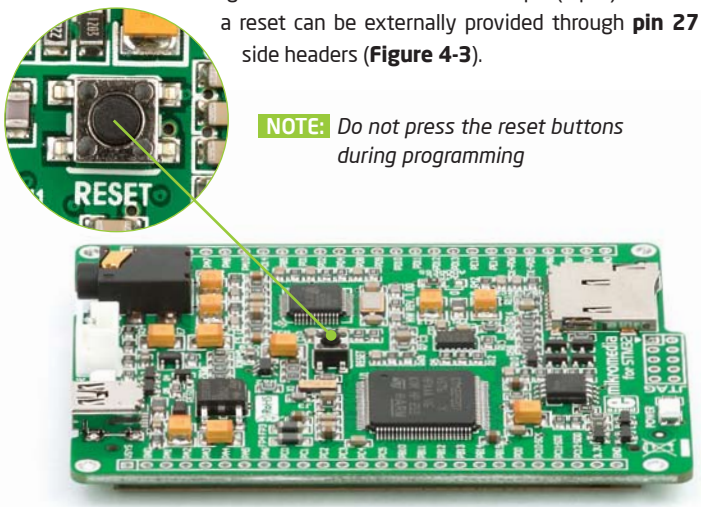

Figure 4-1: Reset button located at the backside of the board

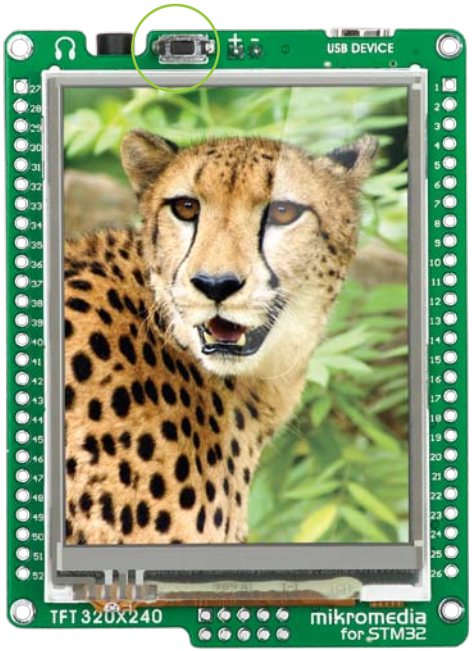

Figure 4-2: Frontal reset button

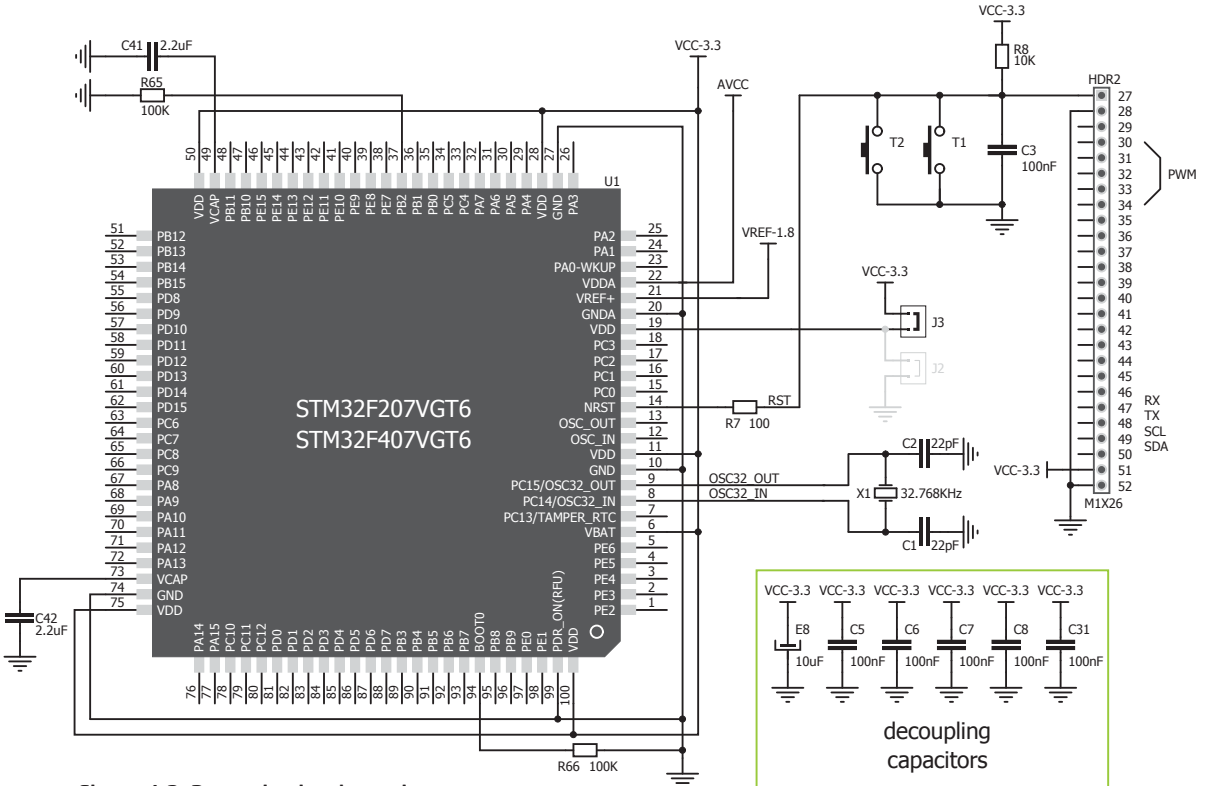

Figure 4-3: Reset circuit schematics

5. Oscillators

STM32F207VGT6 and **STM32F407VGT6** microcontrollers are equipped with internal **16MHz RC oscillator** that provides stable clock signal. Since the chips have an integrated PLL, this base frequency is suitable for further clock multiplication. Board also contains **32.768kHz Crystal oscillator (X1)** which provides external clock for internal **RTCC** module.

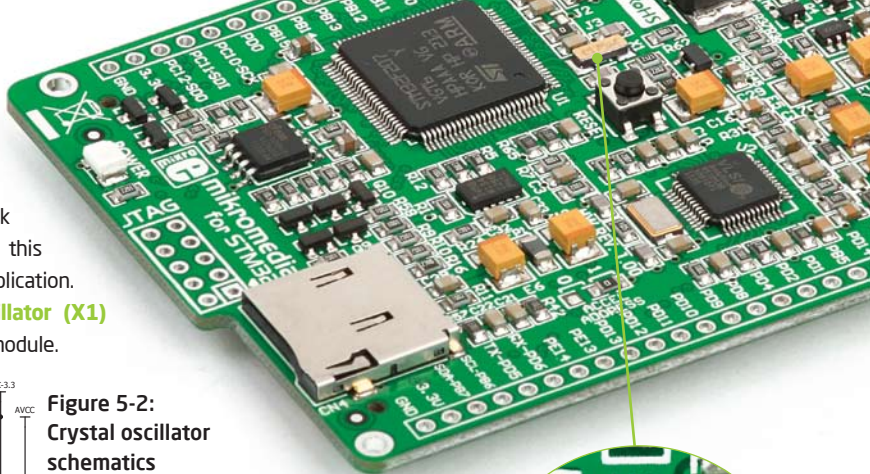

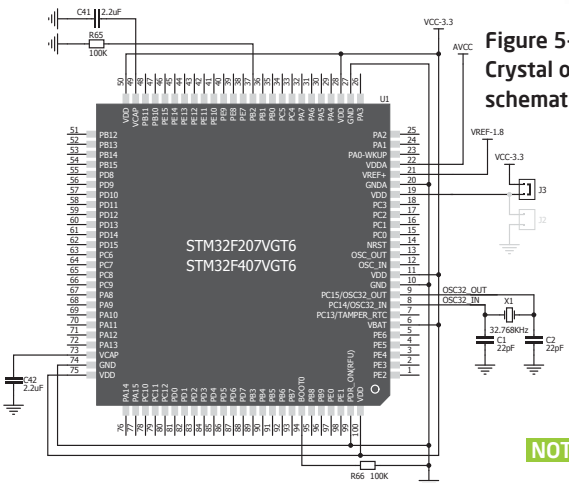

Figure 5-2: Crystal oscillator schematics

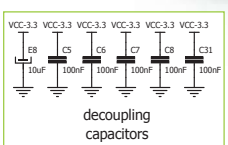

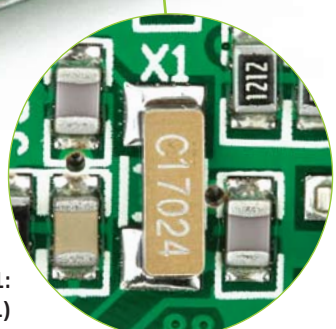

Figure 5-1: Crystal oscillator module (X1)

NOTE: *The use of crystal in all other schematics is implied even if it is purposely left out, because of the schematics clarity.*

6. MicroSD Card Slot

Board contains **microSD card slot** for using microSD cards in your projects. It enables you to store large amounts of data externally, thus saving microcontroller memory. MicroSD cards use Serial Peripheral Interface (**SPI**) for communication with the microcontroller.

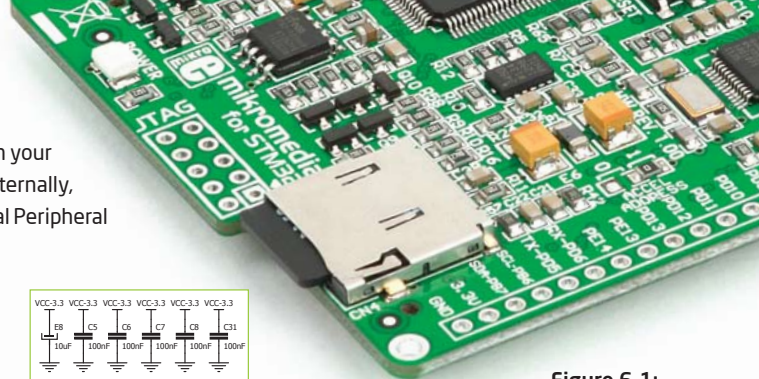

Figure 6-1:
microSD card slot

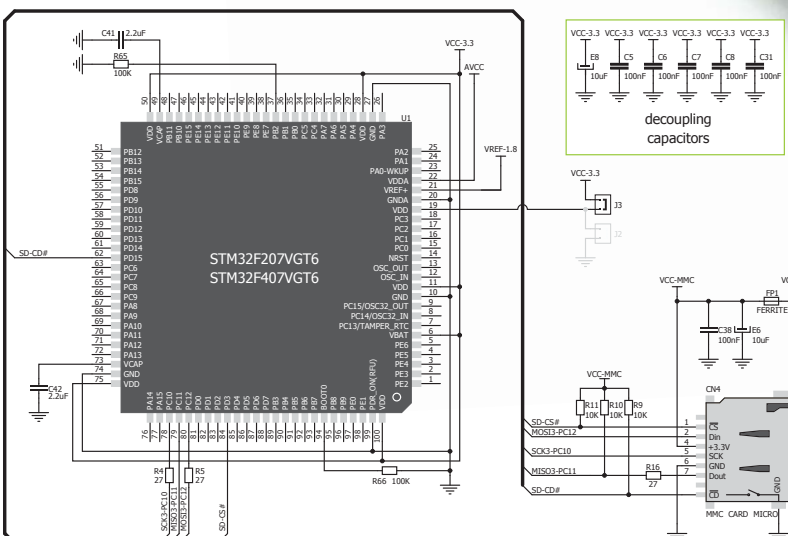

Figure 6-2:
microSD Card Slot module connection schematics

Figure 6-3:
Inserting microSD card

7. Touch Screen

The development system features a **TFT 320x240 display** covered with a **resistive** touch panel. Together they form a functional unit called a **touch screen.** It enables data to be entered and displayed at the same time. The TFT display is capable of showing data in **262.144** different **colors**.

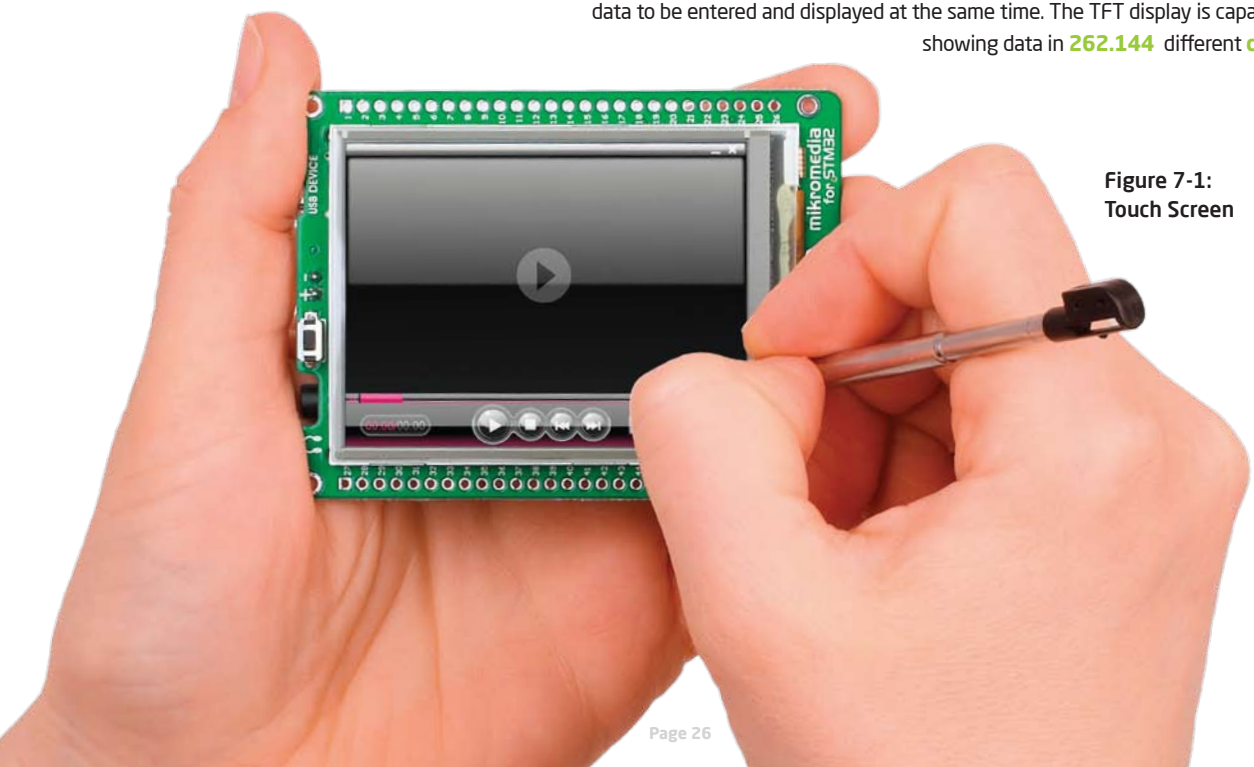

Figure 7-1: Touch Screen

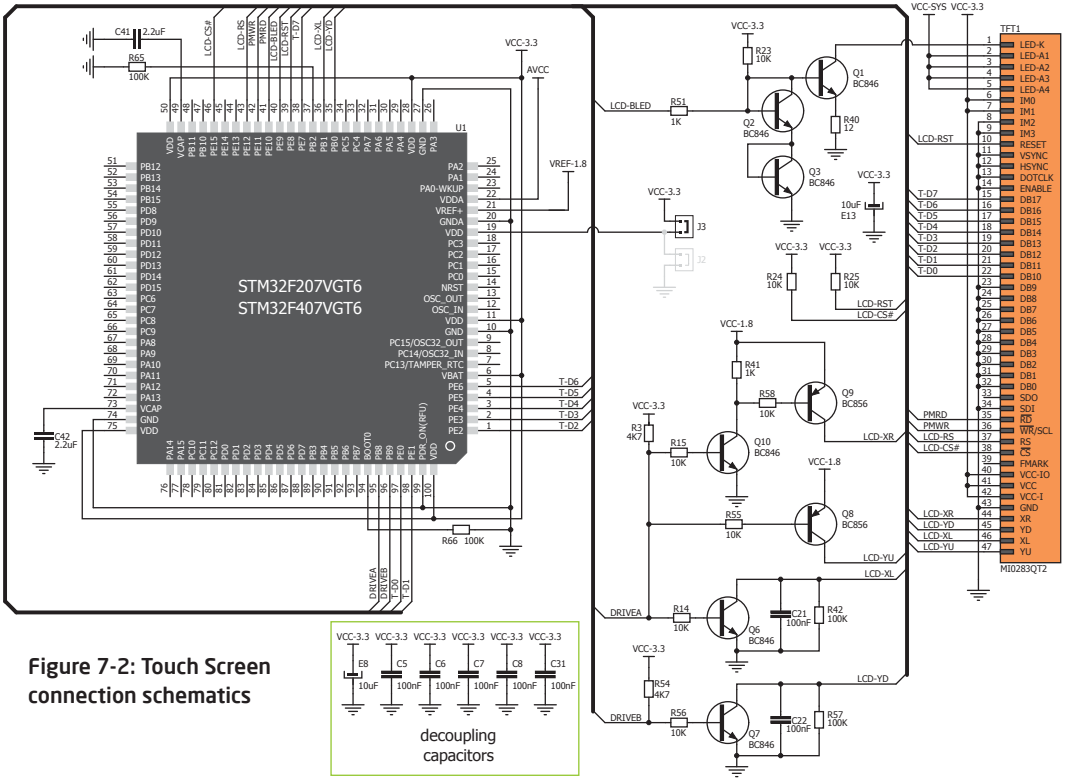

Figure 7-2: Touch Screen connection schematics

8. Audio Module

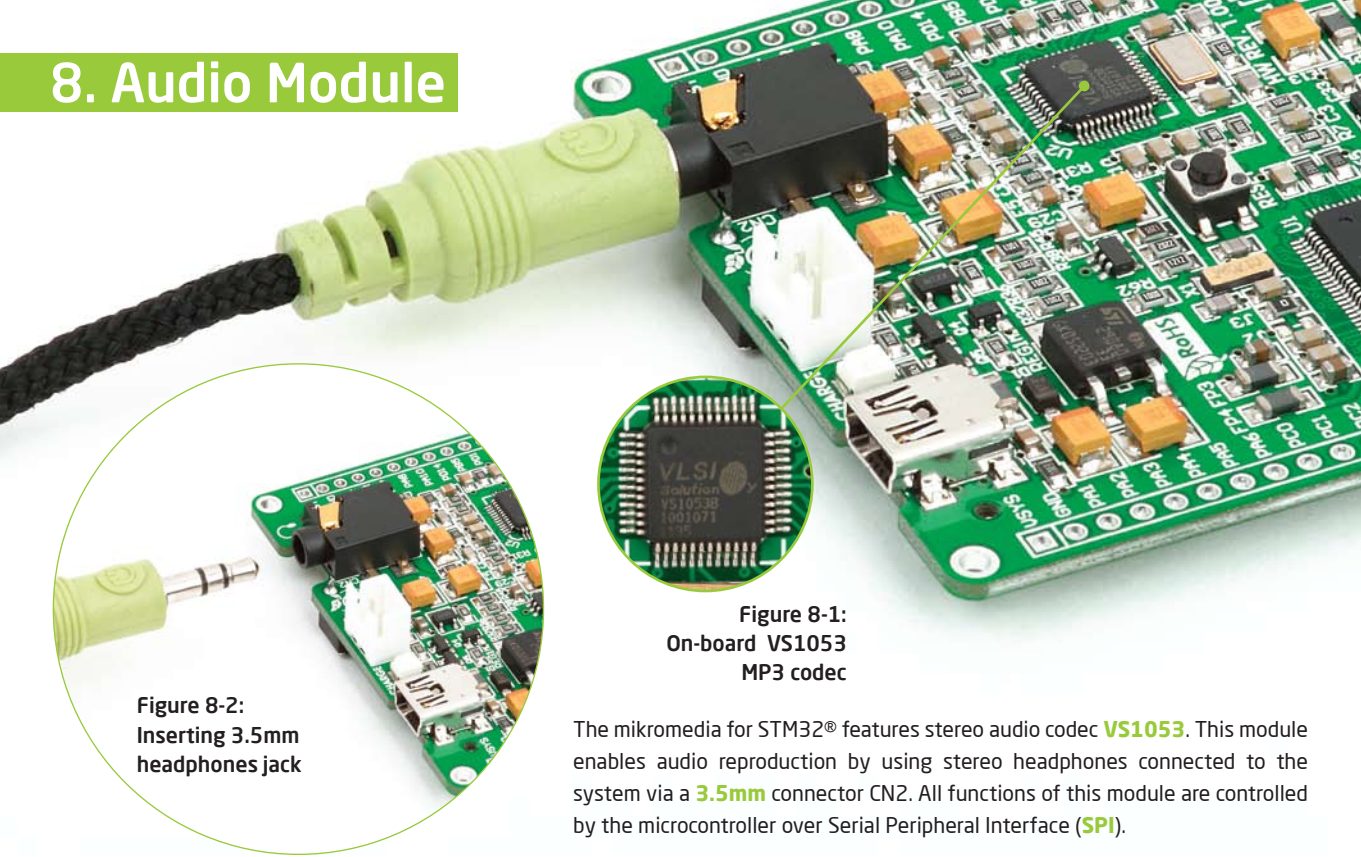

Figure 8-1:
On-board VS1053
MP3 codec

Figure 8-2:
Inserting 3.5mm
headphones jack

The mikromedia for STM32® features stereo audio codec **VS1053**. This module enables audio reproduction by using stereo headphones connected to the system via a **3.5mm** connector CN2. All functions of this module are controlled by the microcontroller over Serial Peripheral Interface (**SPI**).

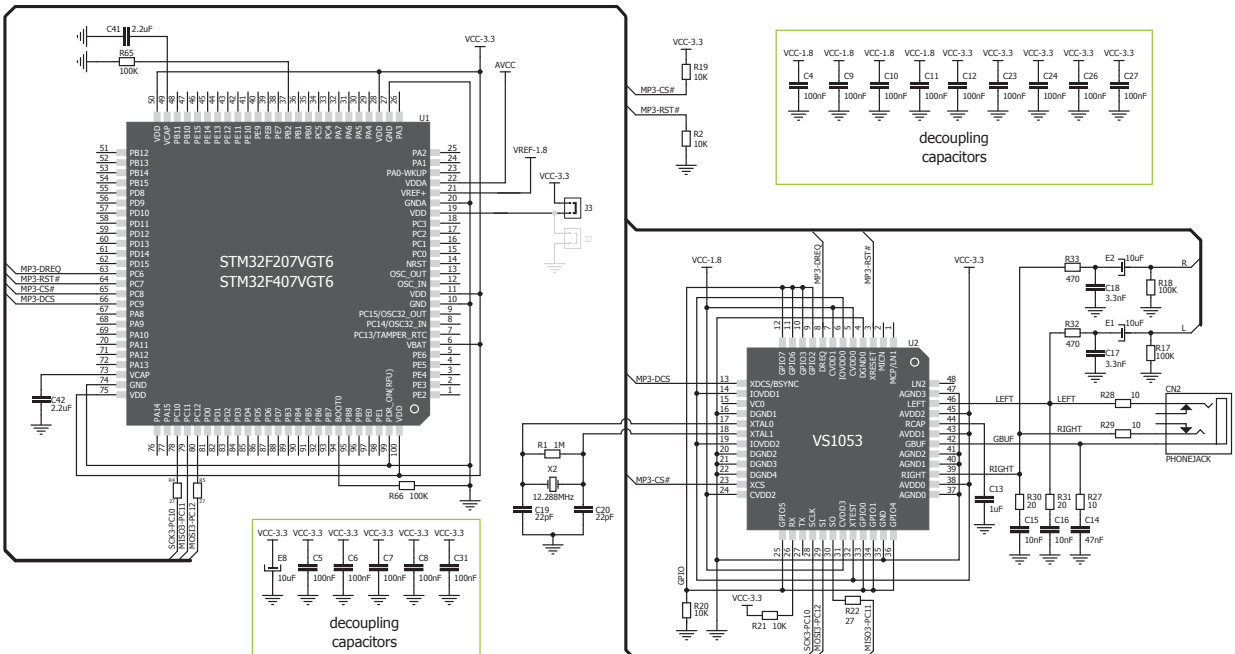

Figure 8-3: Audio module connection schematics

9. USB connection

STM32F207VGT6 and **STM32F407VGT6** microcontrollers have integrated USB module, which enables you to implement USB communication functionality to your mikromedia board. Connection with target USB host is done over MINI-B USB connector which is positioned next to the battery connector.

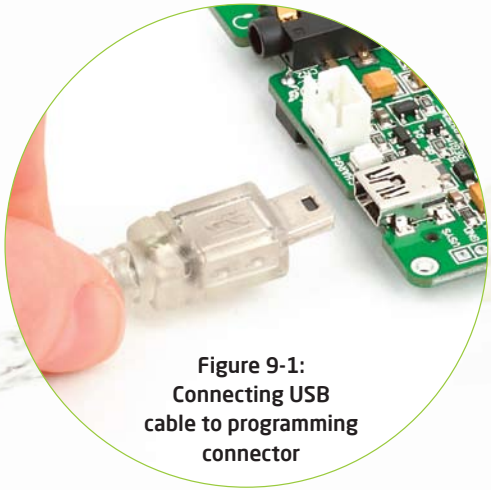

Figure 9-1: Connecting USB cable to programming connector

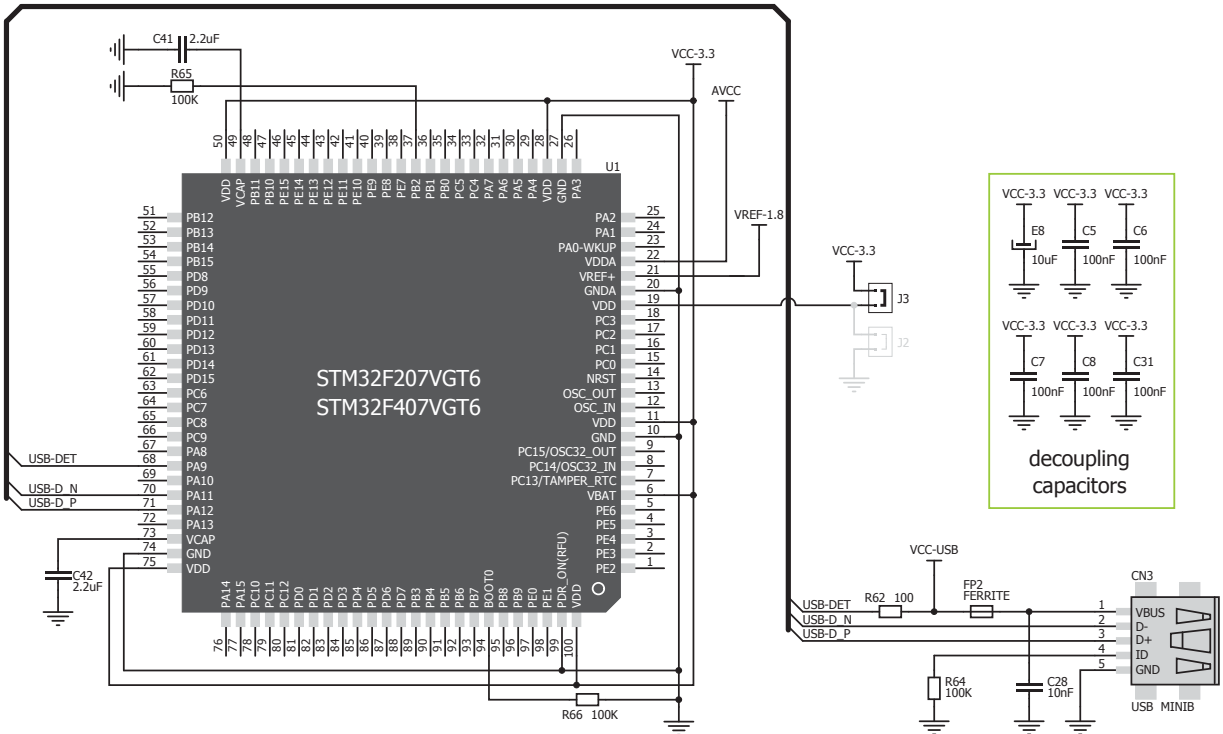

Figure 9-2: USB module connection schematics

10. Accelerometer

On board **ADXL345** accelerometer is used to measure acceleration in three axis: x, y and z. The accelerometer's function is defined by the user in the program loaded into the microcontroller. Communication between the accelerometer and the microcontroller is performed via the **I²C** interface.

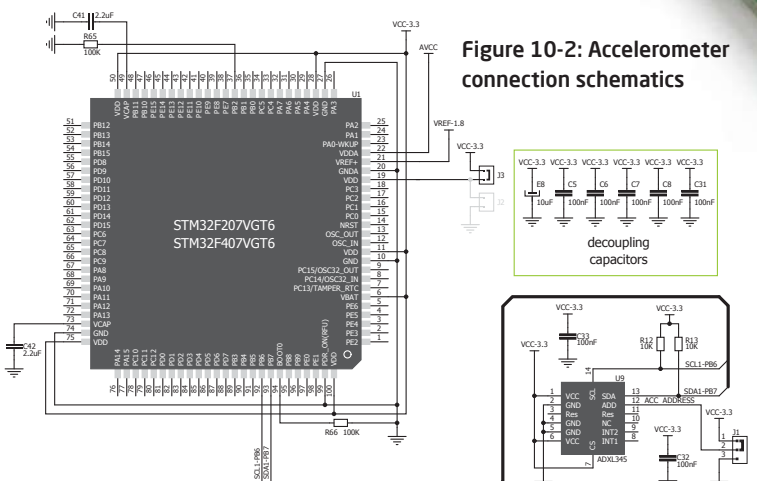

Figure 10-2: Accelerometer connection schematics

Figure 10-1: Accelerometer module

You can set the accelerometer address to 0 or 1 by re-soldering the SMD jumper (zero-ohm resistor) to the appropriate position. Jumper is placed in address 1 position by default.

11. Flash Memory

Figure 11-1:
Flash memory module

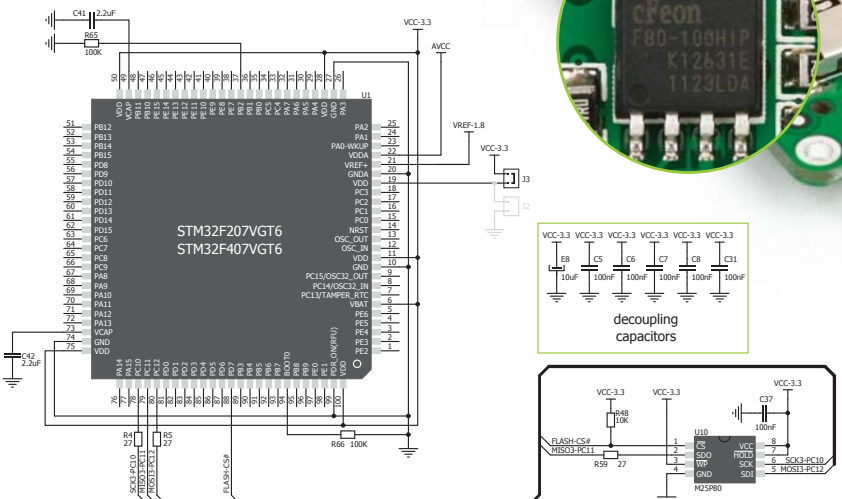

Figure 11-2:
Flash memory module connection schematics

Since multimedia applications are getting increasingly demanding, it is necessary to provide additional memory space to be used for storing more data. The flash memory module enables the microcontroller to use additional **8Mbit** flash memory. It is connected to the microcontroller via the Serial Peripheral Interface (**SPI**).

12. Pads

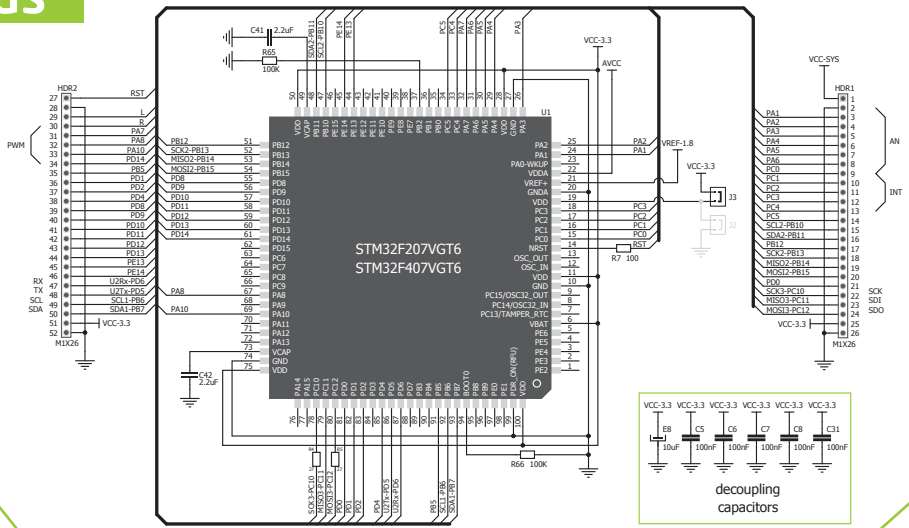

Pads HDR2

Pads HDR1

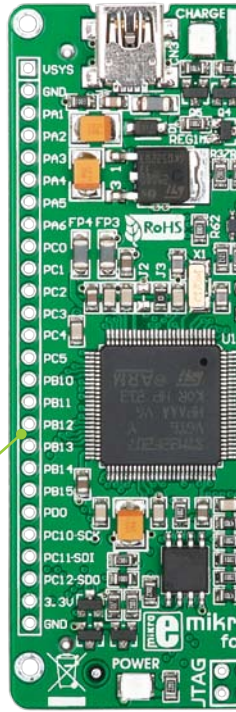

Figure 12-1: Pads connecting schematics

Most microcontroller pins are available for further connectivity via two 1x26 rows of connection pads on both sides of the mikromedia board. They are designed to match additional shields, such as Battery Boost shield, Gaming, PROTO shield and others.

13. Pinout

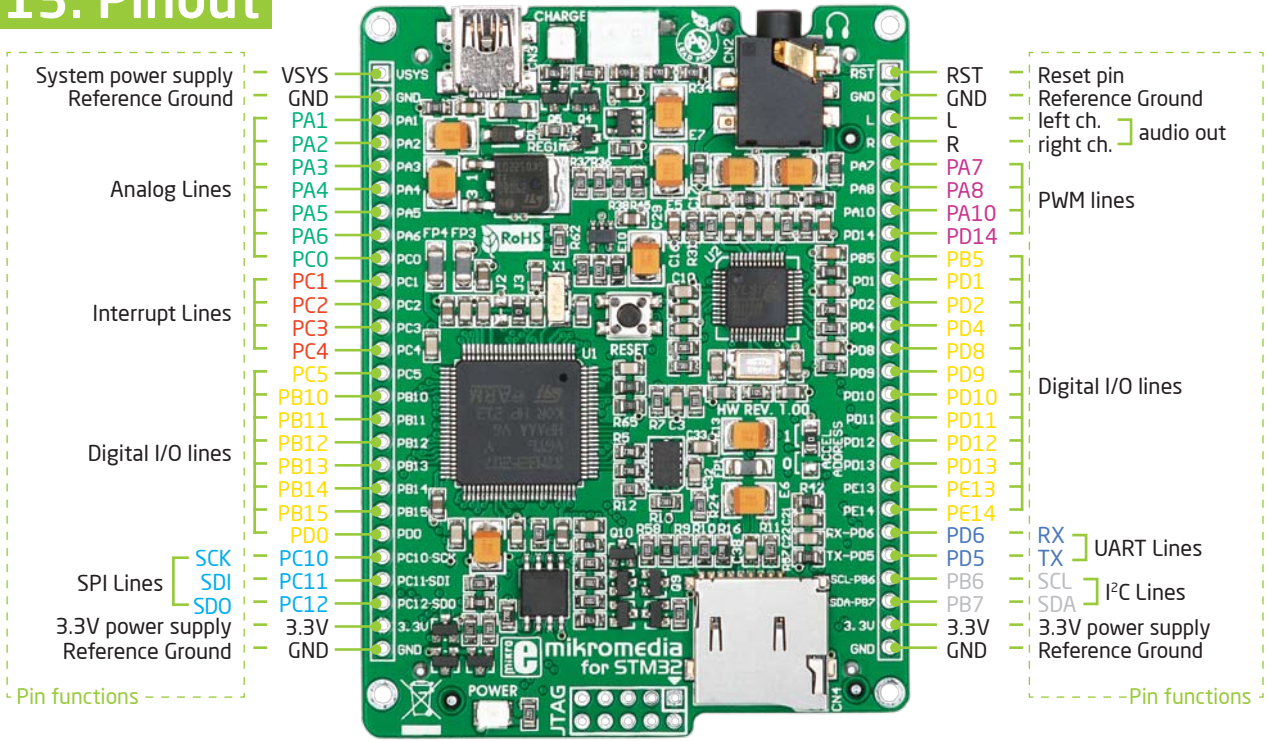
System power supply
Reference Ground
Analog Lines
Interrupt Lines
Digital I/O lines
SPI Lines
3.3V power supply
Reference Ground
Pin functions
VSYS
GND
PA1
PA2
PA3
PA4
PA5
PA6
PC0
PC1
PC2
PC3
PC4
PC5
PB10
PB11
PB12
PB13
PB14
PB15
PD0
SCK
SDI
SDO
PC10
PC11
PC12
3.3V
GND
RST
GND
L
R
PA7
PA8
PA10
PD14
PB5
PD1
PD2
PD4
PD8
PD9
PD10
PD11
PD12
PD13
PE13
PE14
PD6
PD5
PB6
PB7
3.3V
GND
Reset pin
Reference Ground
left ch.
right ch.
audio out
PWM lines
Digital I/O lines
RX
TX
UART Lines
SCL
SDA
I2C Lines
3.3V power supply
Reference Ground
Pin functions
Digital lines
Analog Lines
Interrupt Lines
SPI Lines
I2C Lines
UART lines
PWM lines

14. Dimensions

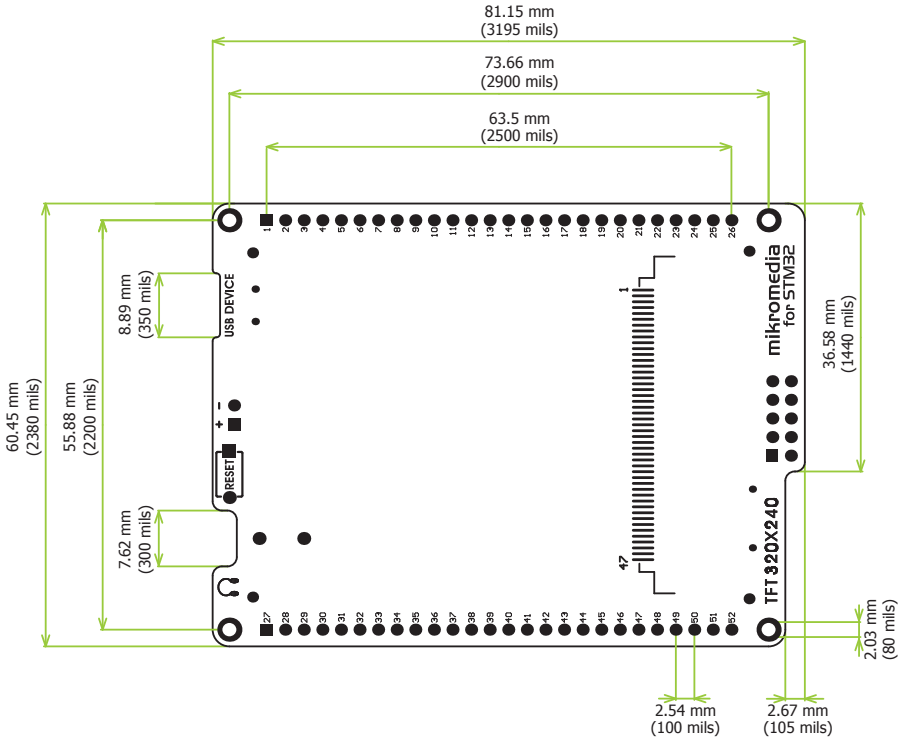

15. Mikromedia accessories

We have prepared a set of extension boards pin-compatible with your mikromedia, which enable you to easily expand your board basic functionality. We call them mikromedia shields. But we also offer other accessories, such as Li-polymer battery, stacking headers, wire jumpers and more.

01 Connect shield

02 BatteryBoost shield

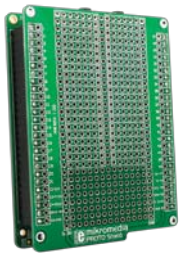

03 PROTO shield

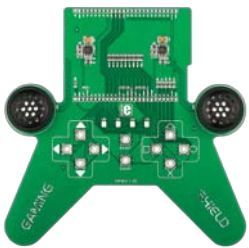

04 Gaming shield

05 Li-Polimer battery

06 Wire Jumpers

07 Stacking headers

What's next?

You have now completed the journey through each and every feature of mikromedia for STM32® board. You got to know it's modules and organization. Now you are ready to start using your new board. We are suggesting several steps which are probably the best way to begin. We invite you to join the users of mikromedia™ brand. You will find very useful projects and tutorials and can get help from a large ecosystem of users. Welcome!

Compiler

You still don't have an appropriate compiler? Locate ARM® compiler that suits you best on the Product DVD provided with the package:

DVD://download/eng/software/compilers/

Choose between mikroC™, mikroBasic™ and mikroPascal™ and download fully functional demo version, so you can begin building your first applications.

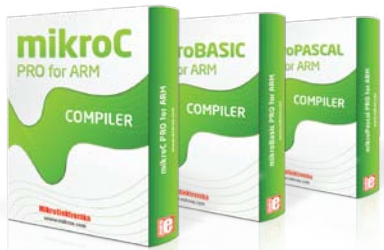

Projects

Once you have chosen your compiler, and since you already got the board, you are ready to start writing your first projects. **Visual TFT software** for rapid development of graphical user interfaces enables you to quickly create your GUI. It will automatically create necessary code which is compatible with mikroElektronika compilers. Visual TFT is rich with examples, which are an excellent starting point for your future projects. Just load the example, read well commented code, and see how it works on hardware. Visual TFT is also available on the Product DVD.

DISCLAIMER

All the products owned by MikroElektronika are protected by copyright law and international copyright treaty. Therefore, this manual is to be treated as any other copyright material. No part of this manual, including product and software described herein, may be reproduced, stored in a retrieval system, translated or transmitted in any form or by any means, without the prior written permission of MikroElektronika. The manual PDF edition can be printed for private or local use, but not for distribution. Any modification of this manual is prohibited.

MikroElektronika provides this manual 'as is' without warranty of any kind, either expressed or implied, including, but not limited to, the implied warranties or conditions of merchantability or fitness for a particular purpose.

MikroElektronika shall assume no responsibility or liability for any errors, omissions and inaccuracies that may appear in this manual. In no event shall MikroElektronika, its directors, officers, employees or distributors be liable for any indirect, specific, incidental or consequential damages (including damages for loss of business profits and business information, business interruption or any other pecuniary loss) arising out of the use of this manual or product, even if MikroElektronika has been advised of the possibility of such damages. MikroElektronika reserves the right to change information contained in this manual at any time without prior notice, if necessary.

HIGH RISK ACTIVITIES

The products of MikroElektronika are not fault - tolerant nor designed, manufactured or intended for use or resale as on - line control equipment in hazardous environments requiring fail - safe performance, such as in the operation of nuclear facilities, aircraft navigation or communication systems, air traffic control, direct life support machines or weapons systems in which the failure of Software could lead directly to death, personal injury or severe physical or environmental damage ('High Risk Activities'). MikroElektronika and its suppliers specifically disclaim any expressed or implied warranty of fitness for High Risk Activities.

TRADEMARKS

The MikroElektronika name and logo, the MikroElektronika logo, mikroC™, mikroBasic™, mikroPascal™, mikroProg™, mikroBUS™, Click Boards™, EasyMx PRO™ and mikromedia™ are trademarks of MikroElektronika. All other trademarks mentioned herein are property of their respective companies.
All other product and corporate names appearing in this manual may or may not be registered trademarks or copyrights of their respective companies, and are only used for identification or explanation and to the owners' benefit, with no intent to infringe.

Copyright © MikroElektronika, 2012, All Rights Reserved.

If you want to learn more about our products, please visit our website at www.mikroe.com

If you are experiencing some problems with any of our products or just need additional information, please place your ticket at www.mikroe.com/esupport

If you have any questions, comments or business proposals, do not hesitate to contact us at office@mikroe.com

mikromedia for STM32® M3/M4
Manual **ver. 1.00**

0 100000 019511

OCEAN CHIPS
Океан Электроники
Поставка электронных компонентов

Компания «Океан Электроники» предлагает заключение долгосрочных отношений при поставках импортных электронных компонентов на взаимовыгодных условиях!

Наши преимущества:

- Поставка оригинальных импортных электронных компонентов напрямую с производств Америки, Европы и Азии, а так же с крупнейших складов мира;
- Широкая линейка поставок активных и пассивных импортных электронных компонентов (более 30 млн. наименований);
- Поставка сложных, дефицитных, либо снятых с производства позиций;
- Оперативные сроки поставки под заказ (от 5 рабочих дней);
- Экспресс доставка в любую точку России;
- Помощь Конструкторского Отдела и консультации квалифицированных инженеров;
- Техническая поддержка проекта, помощь в подборе аналогов, поставка прототипов;
- Поставка электронных компонентов под контролем ВП;
- Система менеджмента качества сертифицирована по Международному стандарту ISO 9001;
- При необходимости вся продукция военного и аэрокосмического назначения проходит испытания и сертификацию в лаборатории (по согласованию с заказчиком);
- Поставка специализированных компонентов военного и аэрокосмического уровня качества (Xilinx, Altera, Analog Devices, Intersil, Interpoint, Microsemi, Actel, Aeroflex, Peregrine, VPT, Syfer, Eurofarad, Texas Instruments, MS Kennedy, Miteq, Cobham, E2V, MA-COM, Hittite, Mini-Circuits, General Dynamics и др.);

Компания «Океан Электроники» является официальным дистрибьютором и эксклюзивным представителем в России одного из крупнейших производителей разъемов военного и аэрокосмического назначения **«JONHON»**, а так же официальным дистрибьютором и эксклюзивным представителем в России производителя высокотехнологичных и надежных решений для передачи СВЧ сигналов **«FORSTAR»**.

AVIC JONHON

«JONHON» (основан в 1970 г.)

Разъемы специального, военного и аэрокосмического назначения:

(Применяются в военной, авиационной, аэрокосмической, морской, железнодорожной, горно- и нефтедобывающей отраслях промышленности)

«FORSTAR» (основан в 1998 г.)

ВЧ соединители, коаксиальные кабели, кабельные сборки и микроволновые компоненты:

(Применяются в телекоммуникациях гражданского и специального назначения, в средствах связи, РЛС, а так же военной, авиационной и аэрокосмической отраслях промышленности).

FORSTAR®

Телефон: 8 (812) 309-75-97 (многоканальный)
Факс: 8 (812) 320-03-32
Электронная почта: ocean@oceanchips.ru
Web: http://oceanchips.ru/
Адрес: 198099, г. Санкт-Петербург, ул. Калинина, д. 2, корп. 4, лит. А