OPERATING CHARACTERISTICS	LSYA MOMENTARY		LSYR MOMENTARY LOW TORQUE		LSYN MAINTAINED	LSYP MOMENTARY LOW PRETRAVEL AND DIFF. TRAVEL		LSYH MOMENTARY LOW PRETRAVEL AND LOW TORQUE		LSYL SEQUENCE DOUBLE POLE ONLY	LSYM CENTER NEUTRAL DOUBLE POLE ONLY	LSYS GRAVITY RETURN	LSYU LOW PRETRAVEL	
PRETRAVEL(MAX)	15°		15°		65°	9°		9°		1ST STEP 15° 2ND STEP 10° ADD'L	18°	NOT APPLICABLE	5°	
OVERTRAVEL(MIN)	60°		60°		20°	68°		68°		48°	57°	NOT APPLICABLE	70°	
DIFFERENTIAL TRAVEL(MAX)	SINGLE POLE 5°	DOUBLE POLE 7°	SINGLE POLE 5°	DOUBLE POLE 7°	40°	SINGLE POLE 3°	DOUBLE POLE 4°	SINGLE POLE 3°	DOUBLE POLE 4°	5°	10°	12°	SGL POLE 3°	DBL POLE 4°
TOTAL TRAVEL (REF)	75°		75°		90°	75°		75°		75°	75°	360°	75°	
OPERATING TORQUE(MAX)	4 IN. LBS		1.7 IN. LBS		4 IN. LBS	4 IN. LBS		1.7 IN. LBS		4 IN. LBS	4 IN. LBS	5 IN-OZ	4 IN. LBS	
FULL TRAVEL TORQUE(MAX)	4 IN. LBS		1.7 IN. LBS			4 IN. LBS		1.7 IN. LBS		4 IN. LBS	4 IN. LBS	5 IN-OZ	4 IN. LBS	

SIDE ROTARY

SINGLE POLE

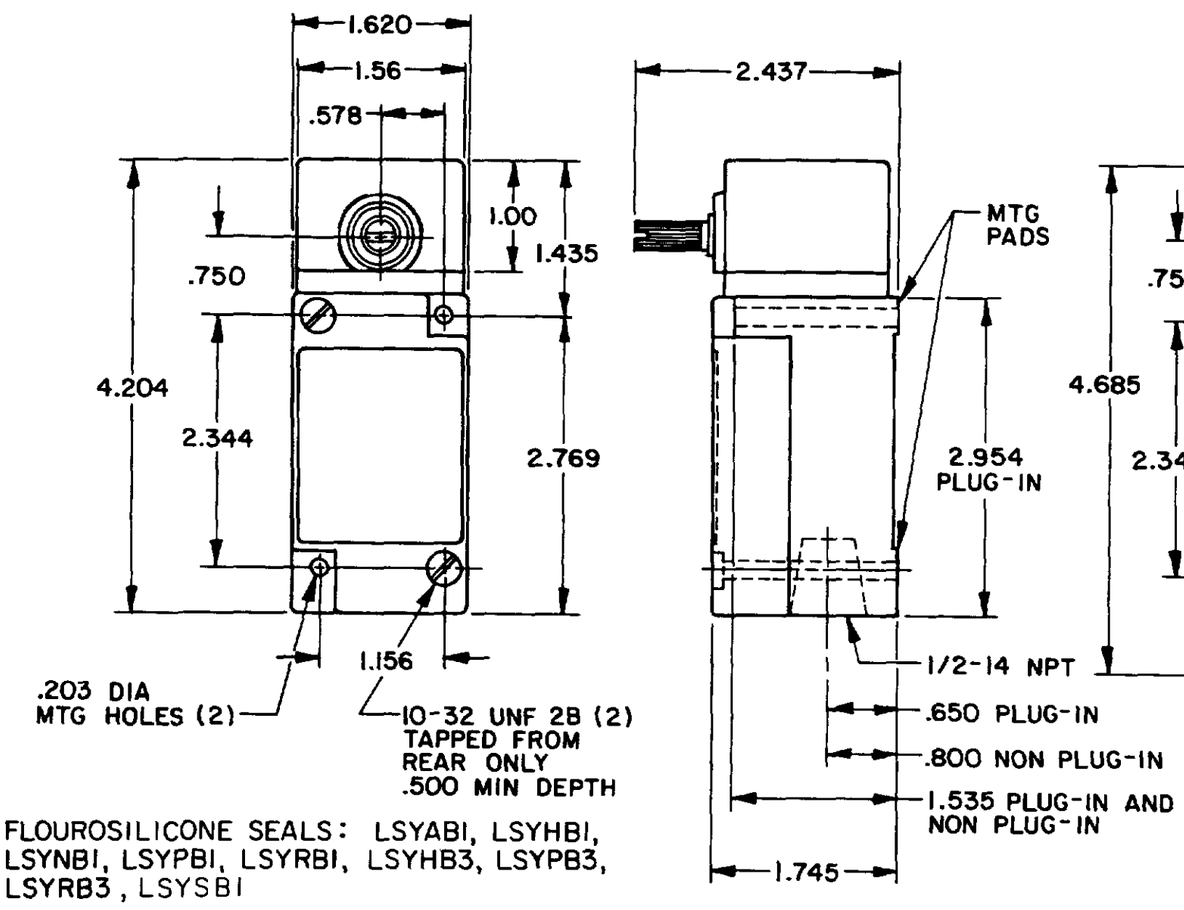

FLOUROSILICONE SEALS: LSYABI, LSYHBI, LSYNBI, LSYPBI, LSYRBI, LSYHB3, LSYPB3, LSYRB3, LSYSBI

VITON: LSYACI, LSYHCI, LSYNCI, LSYPCI, LSYRCI, LSYAC3, LSYHC3, LSYNC3, LSYPC3, LSYRC3 LSYSCI

DOUBLE POLE

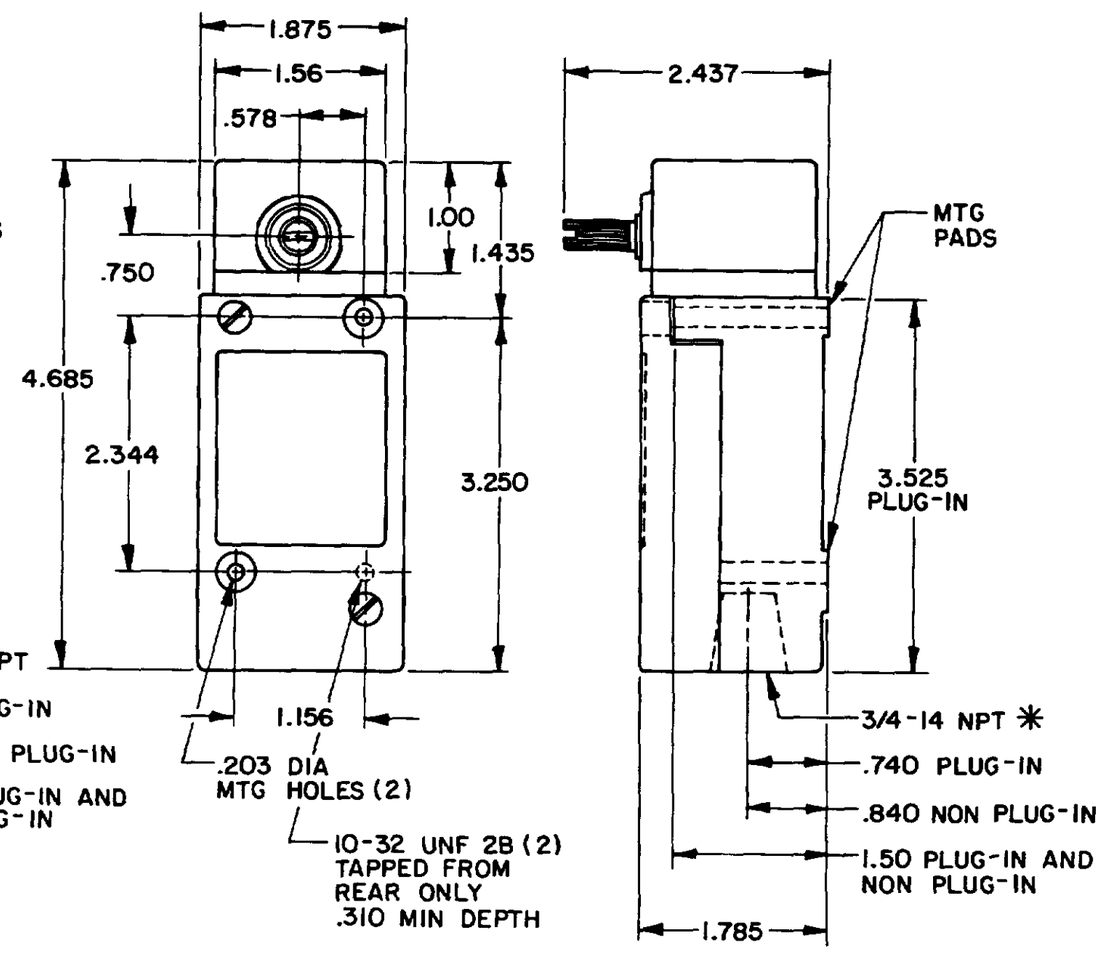

FLOUROSILICONE SEALS: LSYAB2, LSYHB2, LSYMB2, LSYNB2, LSYPB2, LSYRB2, LSYAB4, LSYHB4, LSYMB4, LSYNB4, LSYPB4, LSYRB4

* (LSYAB6, LSYHB6, LSYMB6, LSYNB6, LSYPB6, LSYRB6, LSYAB7, LSYHB7, LSYMB7, LSYNB7, LSYPB7, LSYRB7 HAVE 1/2-14 CONDUIT HOLE)

VITON SEALS: LSYAC2, LSYHC2, LSYNC2, LSYPC2, LSYRC2, LSYAC4, LSYHC4, LSYNC4, LSYPC4, LSYRC4, LSYMC2, LSYMC4, LSYMC6, LSYMC7, LSYLC2, LSYLC4, LSYLC6, LSYLC7

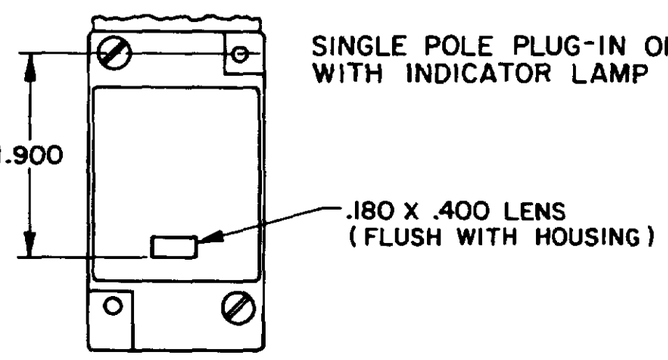

SINGLE POLE PLUG-IN ONLY WITH INDICATOR LAMP

120 LAMP VOLTAGE -
TYPE LSYAB5, LSYHB5, LSYNB5, LSYPB5, LSYRB5, LSYAC5, LSYHC5, LSYNC5, LSYPC5, LSYRC5

240 LAMP VOLTAGE -
TYPE LSYAB8, LSYHB8, LSYNB8, LSYPB8, LSYRB8, LSYAC8, LSYHC8, LSYNC8, LSYPC8, LSYRC8

OPERATING DATA-SIDE ROTARY

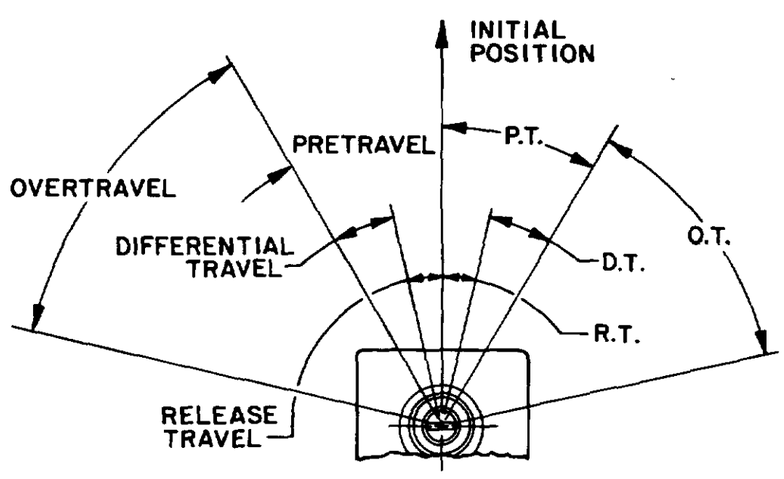

NOTE
1 - ALL UNITS AVAILABLE WITH FLUOROSILICONE AND VITON SEALS

MANIFOLD MOUNT (PLUG-IN ONLY) SINGLE POLE AND DOUBLE POLE TYPE LSYA THROUGH LSYW SERIES

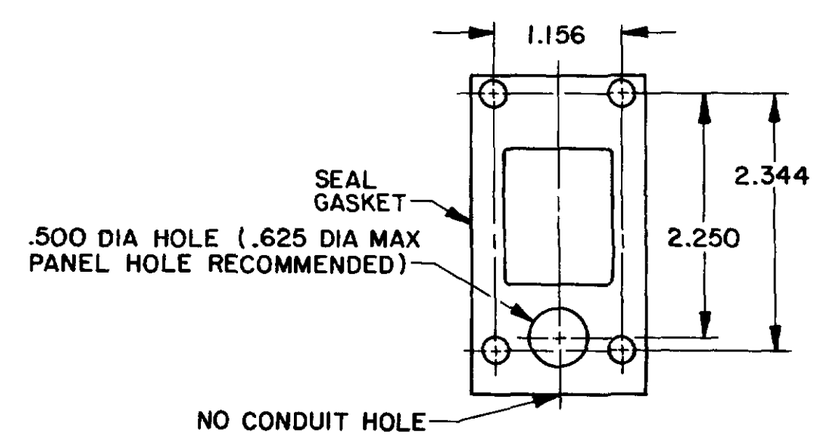

MICRO SWITCH
FREEPORT ILLINOIS USA
A DIVISION OF HONEYWELL
FED. MFG. CODE 01929
THIS DRAWING COVERS A PROPRIETARY ITEM AND IS THE PROPERTY OF MICRO SWITCH A DIVISION OF HONEYWELL. THIS DRAWING IS NOT TO BE COPIED OR USED WITHOUT THE APPROVAL OF MICRO SWITCH

SWITCH-ENCLOSED
CHART 1
LSY SERIES
CATALOG LISTING
WEIGHT
DESIGN UNITS
TOLERANCES
SCALE NONE
DO NOT SCALE PRINT
THIRD ANGLE PROJECTION

SIDE ROTARY CAM TRACKING

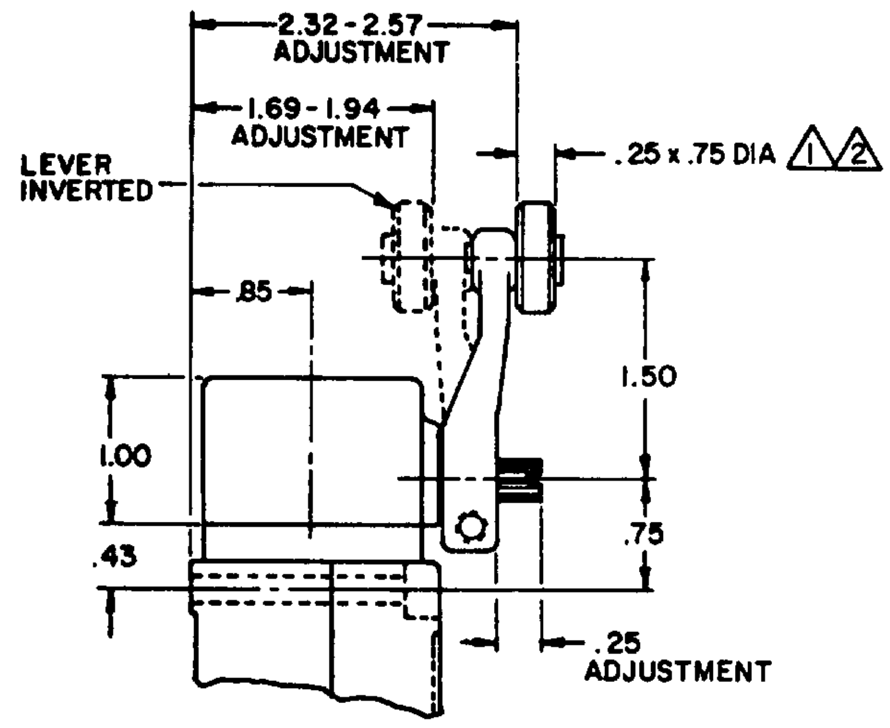

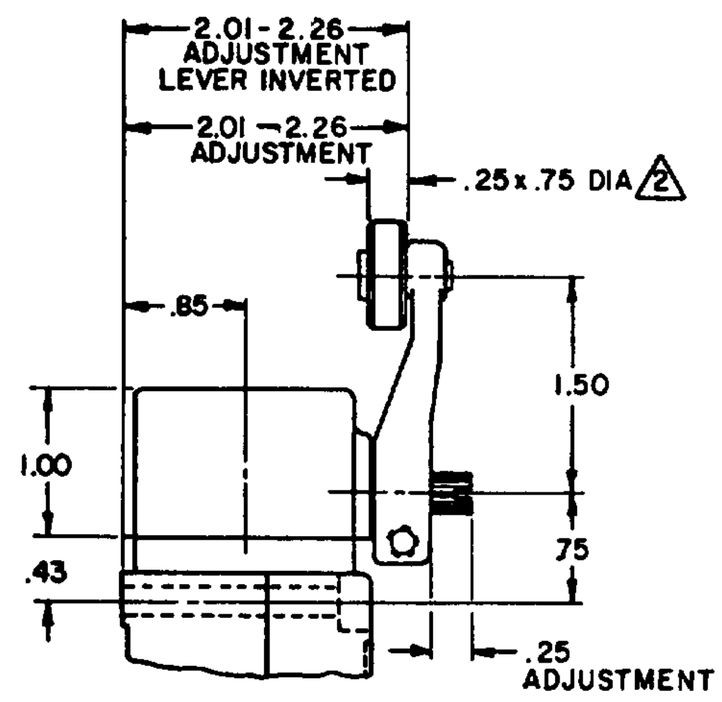

LSZ51 TYPE LEVERS

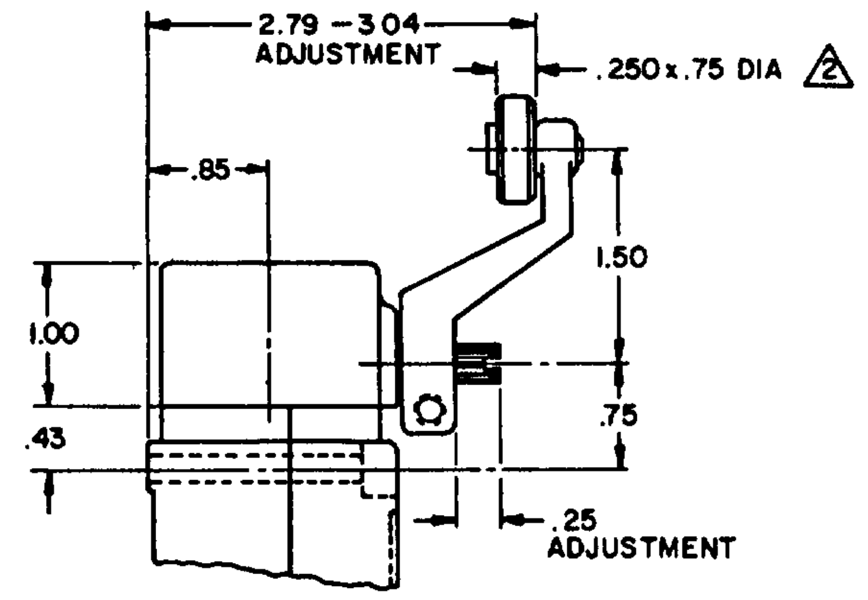

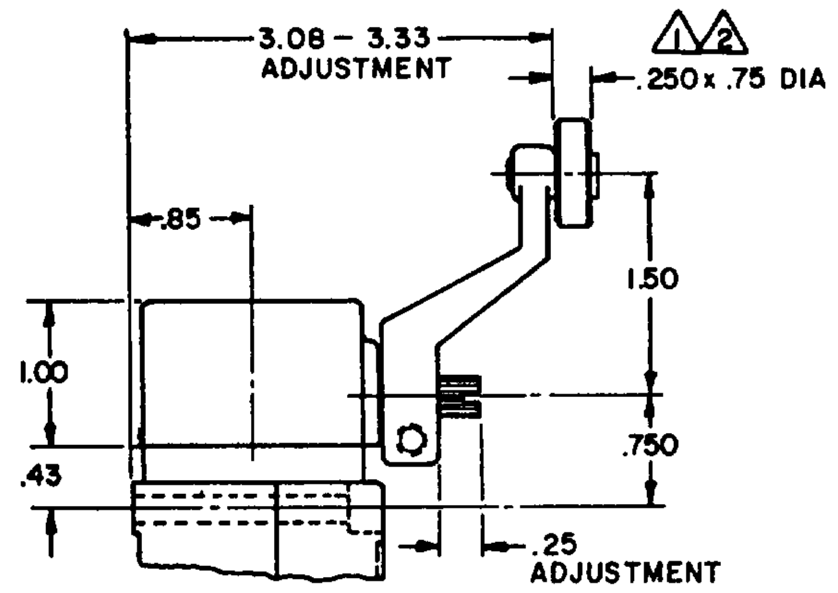

LSZ55 TYPE LEVERS

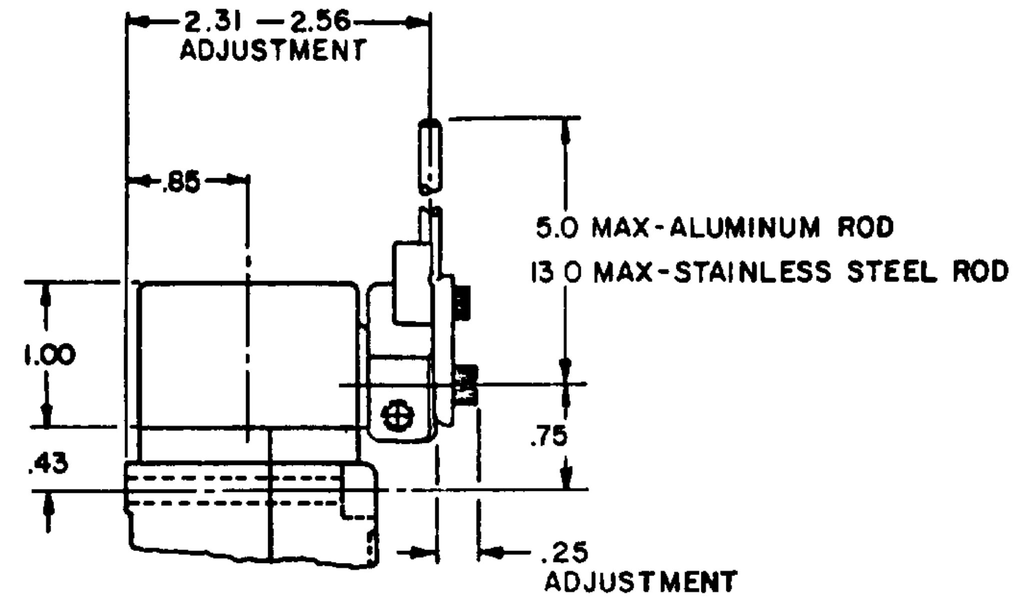

LSZ54 TYPE LEVER

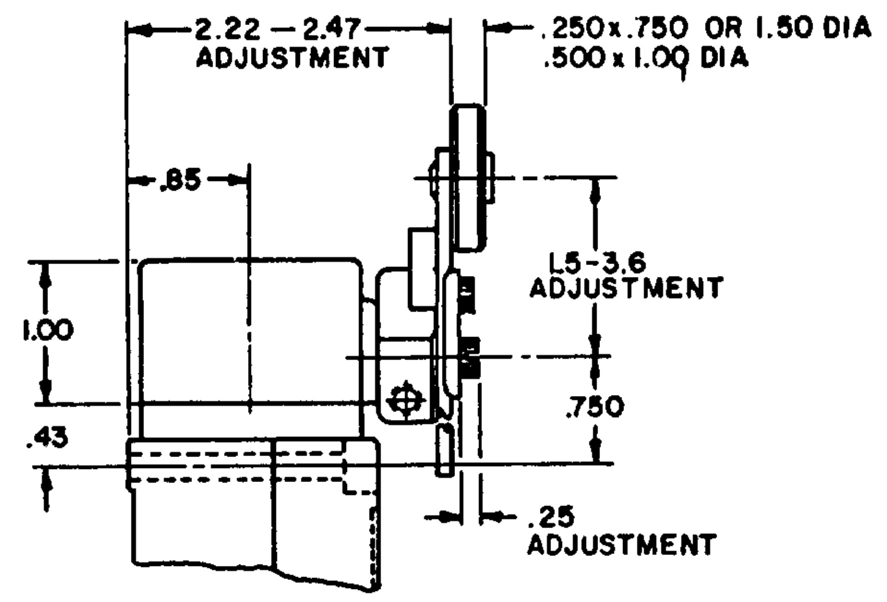

LSZ52 TYPE LEVER

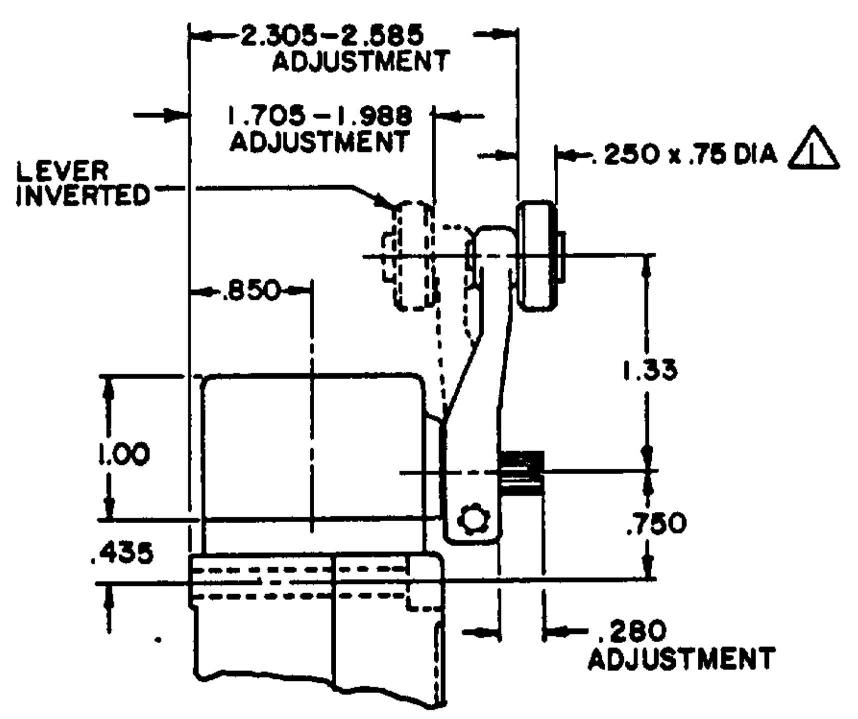

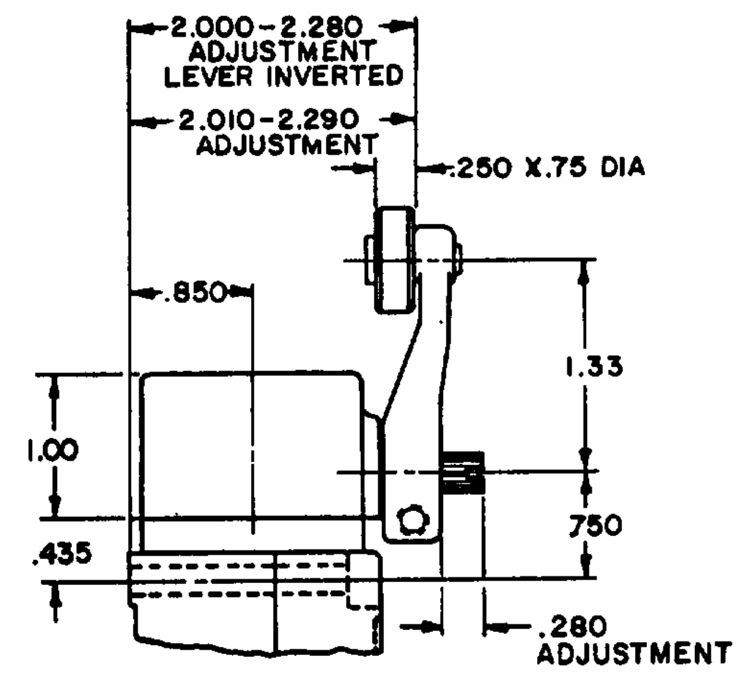

LSZ59 TYPE LEVERS

NOTES
1. ALSO AVAILABLE IN .250 X 1.500 DIA NYLON, BUT LEVER CANNOT BE INVERTED
2. FOR ADDITIONAL ROLLER WIDTHS AND/OR DIAMETERS REFER TO (M)
3 - FOR ADDITIONAL TYPES OF ROLLERS AND LEVERS REFER TO LSZ CHART 1 (M)

THIS DRAWING COVERS A PROPRIETARY ITEM AND IS THE PROPERTY OF MICRO SWITCH A DIVISION OF HONEYWELL THIS DRAWING IS NOT TO BE COPIED OR USED WITHOUT THE APPROVAL OF MICRO SWITCH

MICRO SWITCH
a Honeywell Division
FED MFG CODE 91929

CATALOG LISTING
LSY SERIES
CHART 1

THIRD ANGLE PROJECTION
SCALE NONE
DO NOT SCALE PRINT

UNLESS OTHERWISE SPECIFIED TOLERANCES ARE
ONE PLACE (.0) ±.030
TWO PLACE (.00) ±.015
THREE PLACE (.000) ±.005
ANGLES ±
WEIGHT

TOP ROTARY

SINGLE POLE

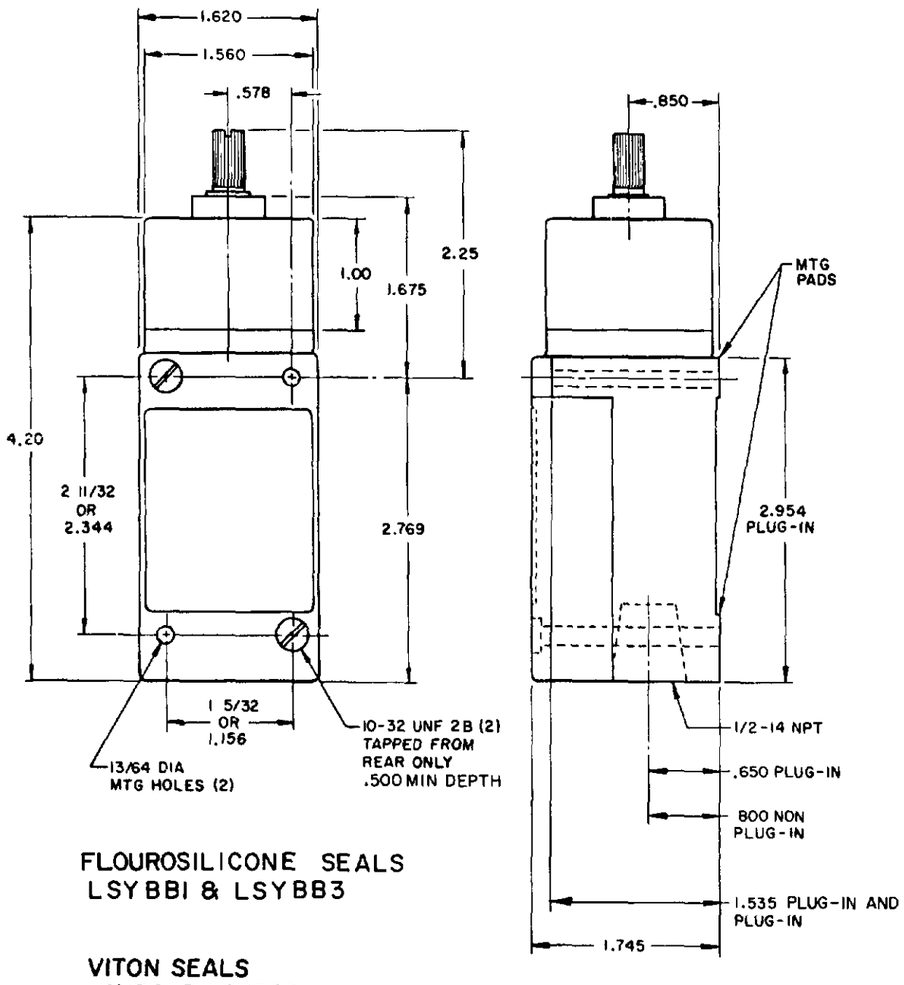

FLOUROSILICONE SEALS
LSYBB1 & LSYBB3

VITON SEALS
LSYBC1 & LSYBC3

DOUBLE POLE

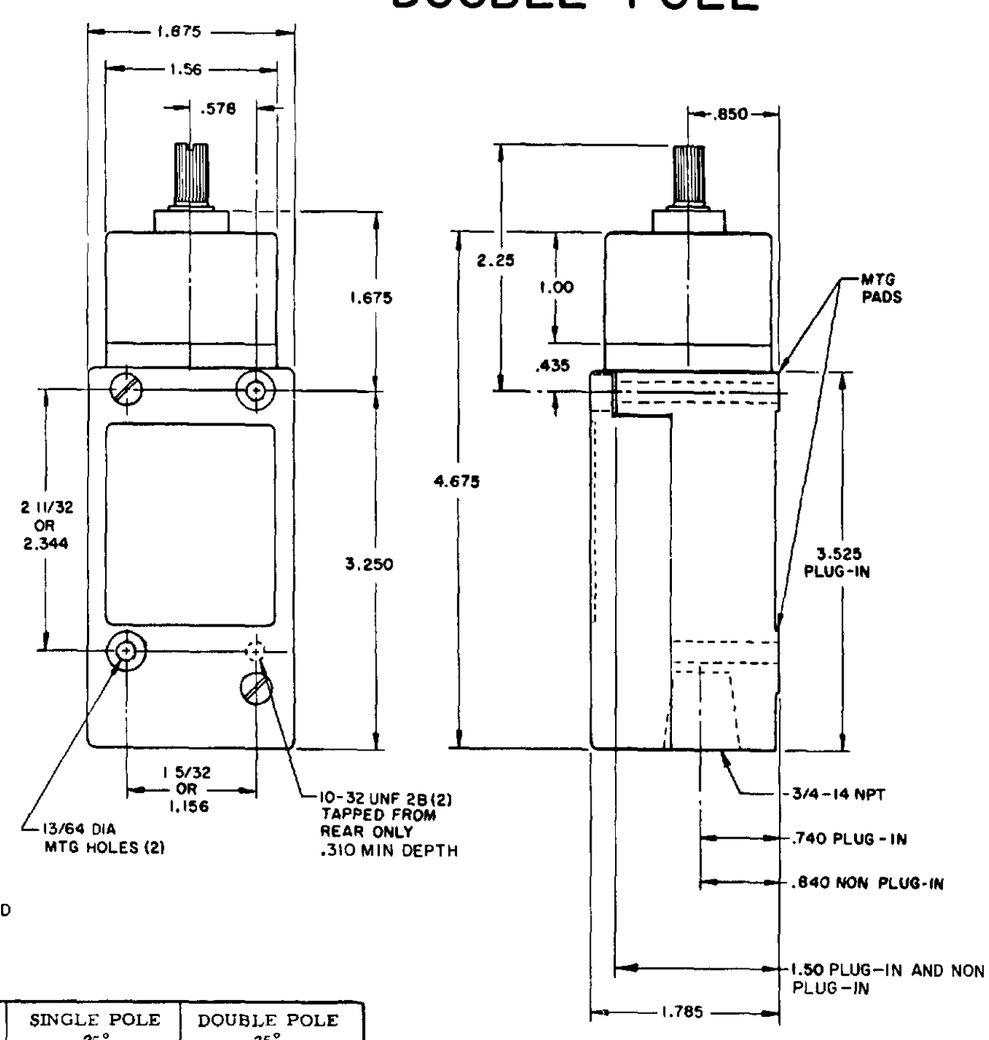

	SINGLE POLE	DOUBLE POLE
PRETRAVEL MAX	25°	25°
OVERTRAVEL MIN	110°	110°
DIFFERENTIAL TRAVEL MAX	10°	12°
OPERATING TORQUE MAX	2.5 IN. LBS	2.5 IN. LBS
TOTAL TRAVEL (REF)	135°	135°

FLOUROSILICONE SEALS
LSYBB2 & LSYBB4
LSYBB6 & LSYBB7 HAVE 1/2-14NPT CONDUIT HOLE

VITON SEALS
LSYBC2 & LSYBC4, LSYBC6 & LSYBC7 HAVE 1/2-14 NPT CONDUIT HOLE

ELECTRICAL RATINGS

10 AMP CONT.

A.C. VOLTAGE	AMPS AT .35 POWER FACTOR			
	SINGLE POLE		DOUBLE POLE	
	MAKE	BREAK	MAKE	BREAK
120	60	6	30	3
240	30	3	15	1.5
480	15	1.5	7.5	.75
600	12	1.2	6	.6

D.C. VOLTAGE	MAKE & BREAK INDUCTIVE	RESISTIVE
120	0.25	0.80
240	0.15	0.40

ELECTRONIC DUTY BASIC SWITCH
10 AMP CONT.

VOLTAGE	
5 AC OR DC MIN	.01 AMP MIN
600 AC	720 VA
240 DC	30 WATT

WIRING BASIC SWITCH
(SAME POLARITY MUST BE OBSERVED FOR EACH POLE)

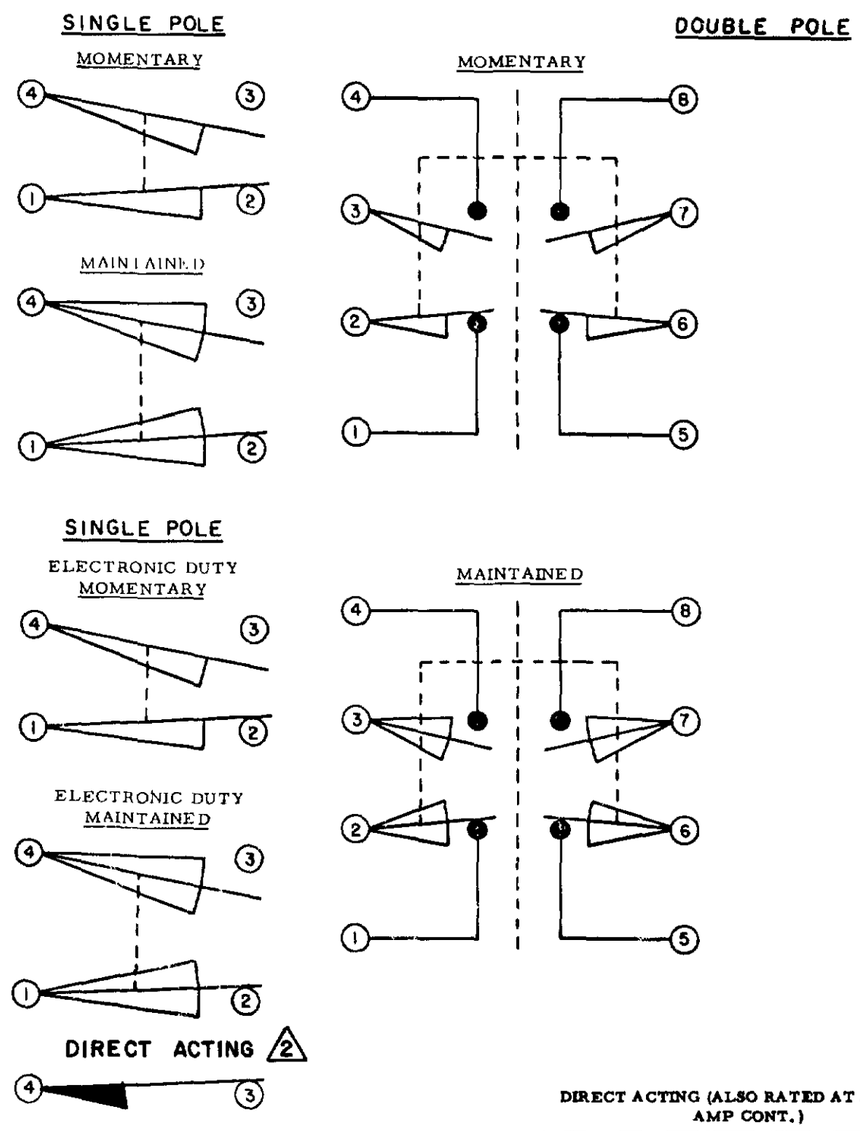

DIRECT ACTING (ALSO RATED AT A.C. 10 AMP CONT.)

D.C. VOLTAGE	MAKE AND BREAK AMPS	
	INDUCTIVE	RESISTIVE
30	4.2	4.2
120	1.1	1.1
240	.55	.55

NOTES:
1 - ALL UNITS AVAILABLE WITH FLOUROSILICONE AND VITON SEALS

2 DIFFERENTIAL TRAVEL ON ALL OPERATING CHARACTERISTICS NOT APPLICABLE

MICRO SWITCH
FREEPORT ILLINOIS U.S.A.
A DIVISION OF HONEYWELL
FED MFG CODE 81926
THIS DRAWING COVERS A PROPRIETARY ITEM AND IS THE PROPERTY OF MICRO SWITCH A DIVISION OF HONEYWELL. THIS DRAWING IS NOT TO BE COPIED OR USED WITHOUT THE APPROVAL OF MICRO SWITCH

SWITCH-ENCLOSED
CHART 1
CATALOG LISTING
LSY SERIES
SCALE NONE
DO NOT SCALE PRINT
UNLESS OTHERWISE NOTED
TOLERANCES ARE

PLUNGER TYPE TOP

SINGLE POLE

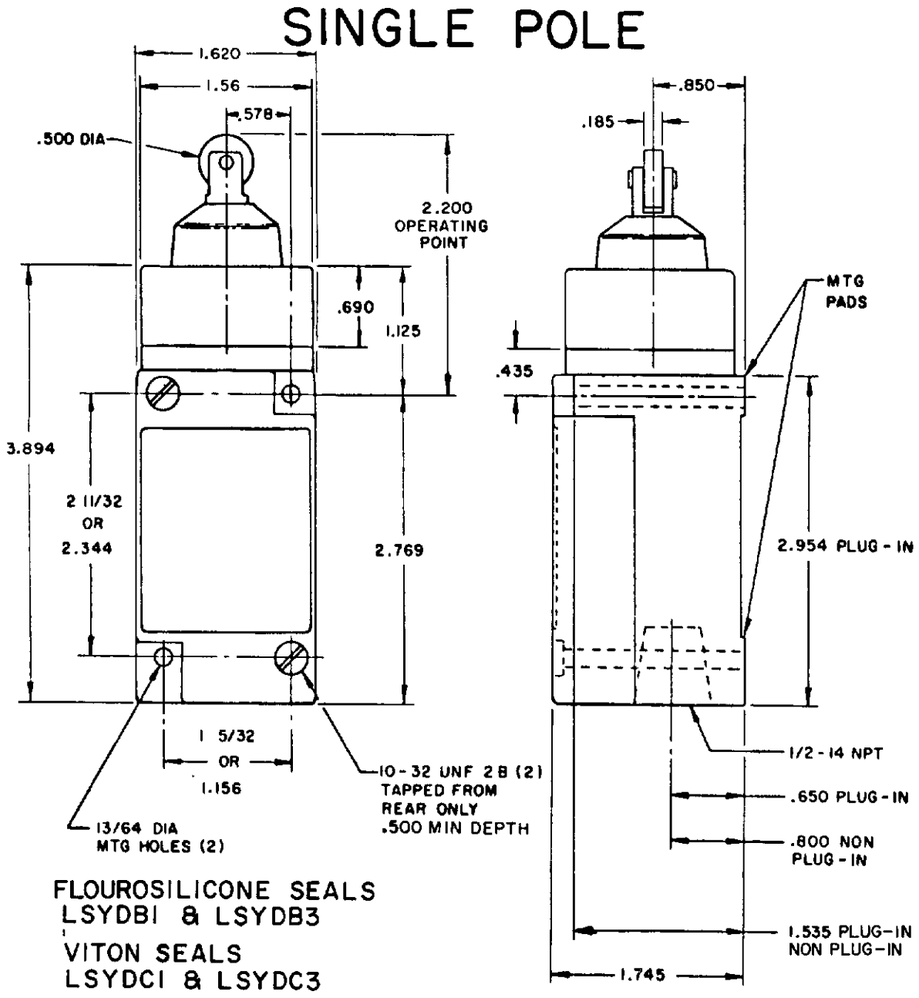

FLOUROSILICONE SEALS
LSYDB1 & LSYDB3

VITON SEALS
LSYDC1 & LSYDC3

DOUBLE POLE

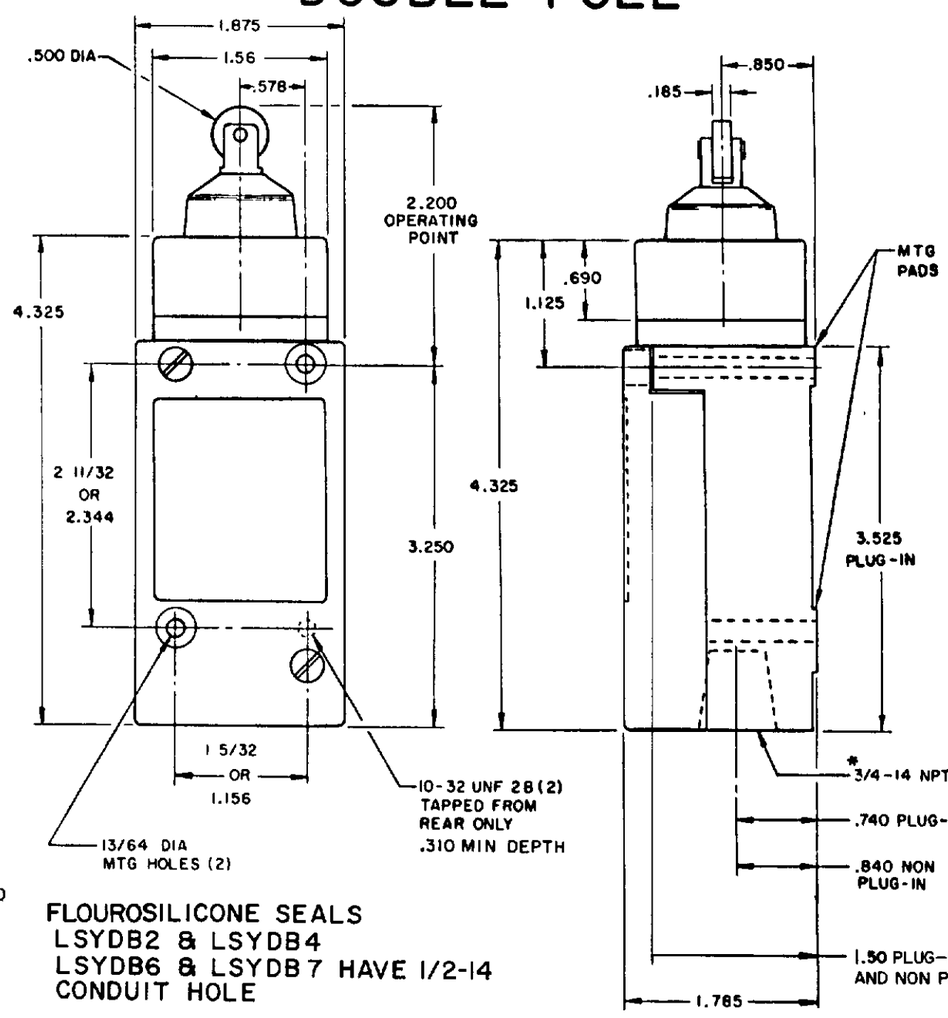

FLOUROSILICONE SEALS
LSYDB2 & LSYDB4
LSYDB6 & LSYDB7 HAVE 1/2-14 CONDUIT HOLE

VITON SEALS
LSYDC2 & LSYDC4
LSYDC6 & LSYDC7

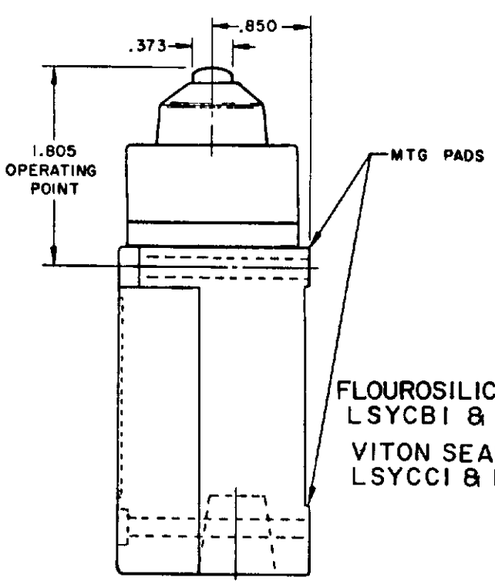

FLOUROSILICONE SEALS
LSYCB1 & LSYCB3

VITON SEALS
LSYCC1 & LSYCC3

SINGLE POLE PLUG-IN ONLY

WITH INDICATOR LAMP

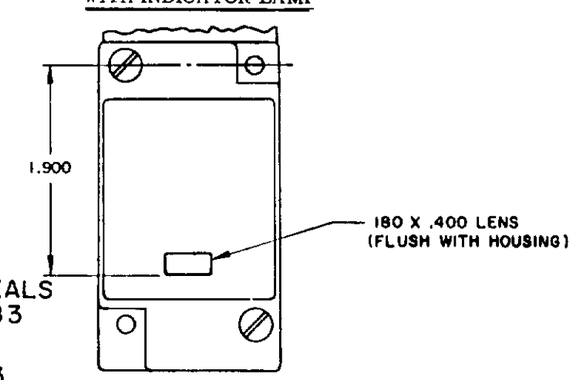

120 LAMP VOLTAGE -
LSYCB5, LSYDB5, LSYVB5
LSYCC5, LSYDC5, LSYVC5

240 LAMP VOLTAGE -
LSYCB8, LSYDB8, LSYVB8
LSYCC8, LSYDC8, LSYVC8

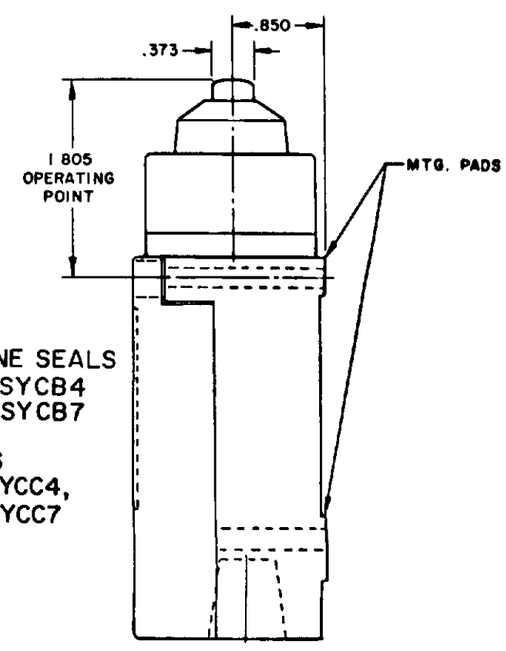

FLOUROSILICONE SEALS
LSYCB2 & LSYCB4
LSYCB6 & LSYCB7

VITON SEALS
LSYCC2 & LSYCC4,
LSYCC6 & LSYCC7

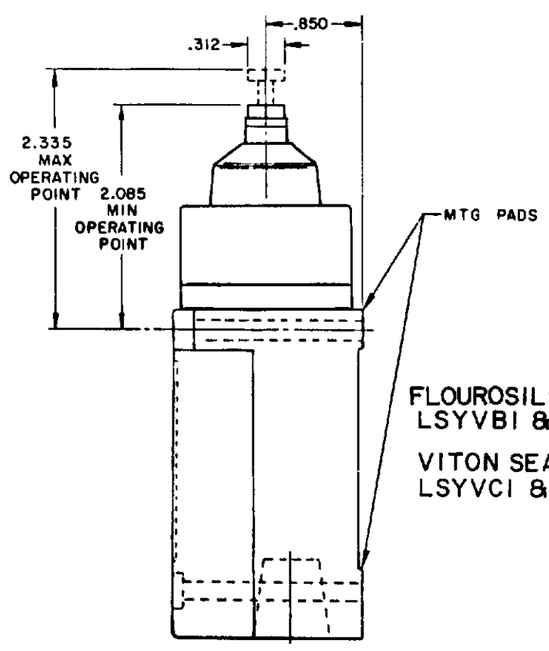

FLOUROSILICONE SEALS
LSYVB1 & LSYVB3

VITON SEALS
LSYVC1 & LSYVC3

MANIFOLD MOUNT (PLUG-IN ONLY)

SINGLE POLE AND DOUBLE POLE

TYPE LSYA THROUGH LSYW SERIES

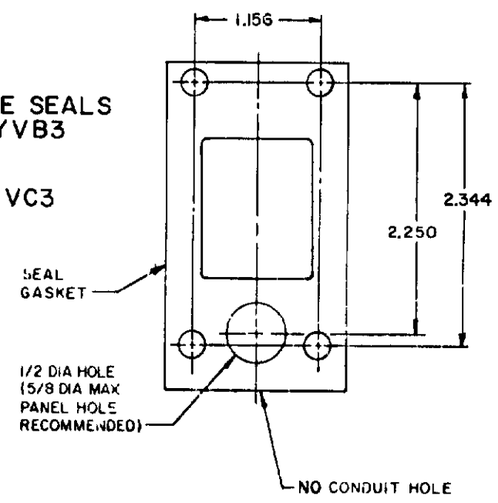

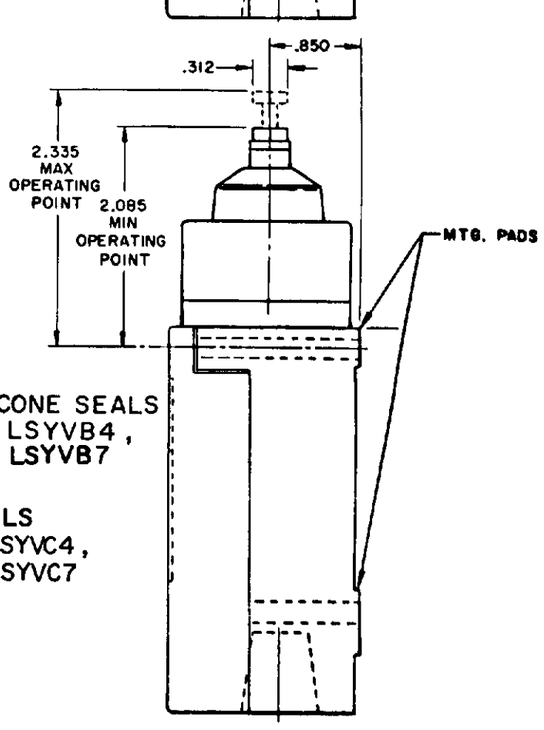

FLOUROSILICONE SEALS
LSYVB2 & LSYVB4,
LSYVB6 & LSYVB7

VITON SEALS
LSYVC2 & LSYVC4,
LSYVC6 & LSYVC7

NOTES:
1 - ALL UNITS AVAILABLE WITH FLOUROSILICONE AND VITON SEALS

MICRO SWITCH
FREEPORT ILLINOIS U S A
A DIVISION OF HONEYWELL
FED MFG CODE 81820
THIS DRAWING COVERS A PROPRIETARY ITEM AND IS THE PROPERTY OF MICRO SWITCH A DIVISION OF HONEYWELL THIS DRAWING IS NOT TO BE COPIED OR USED WITHOUT THE APPROVAL OF MICRO SWITCH

SWITCH-ENCLOSED

CHART 1

CATALOG LISTING LSY SERIES

SCALE NONE
DO NOT SCALE PRINT

SIDE PLUNGER TYPE

SINGLE POLE

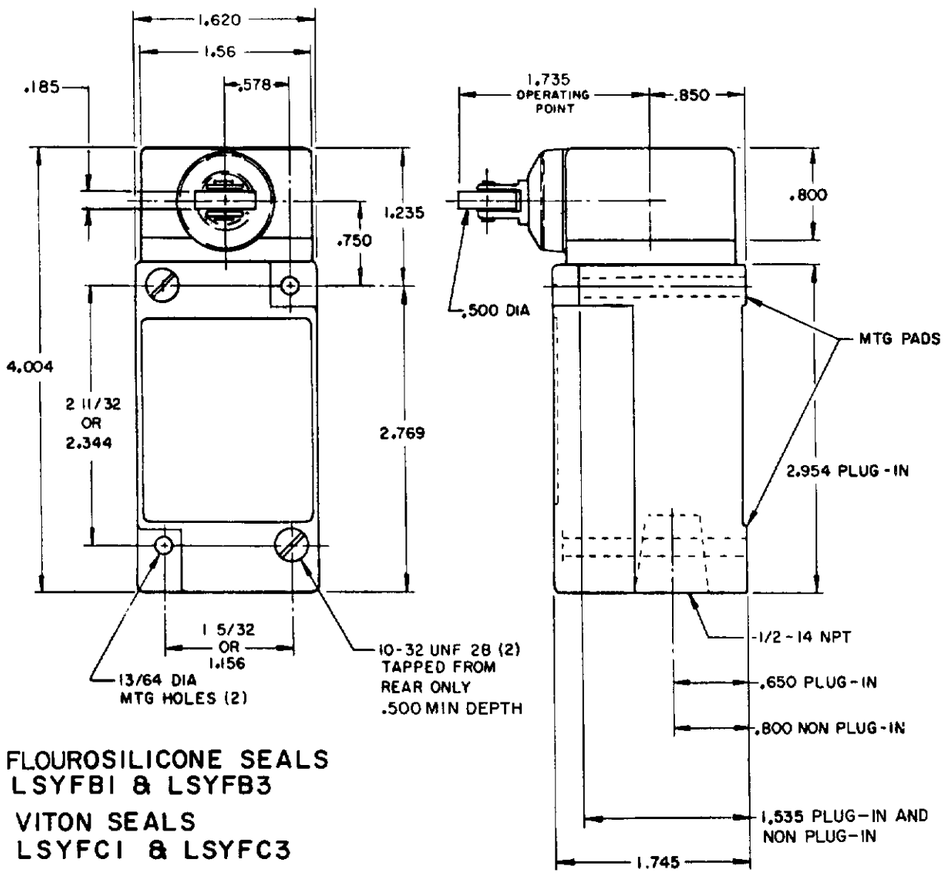

FLOUROSILICONE SEALS
LSYFB1 & LSYFB3

VITON SEALS
LSYFC1 & LSYFC3

DOUBLE POLE

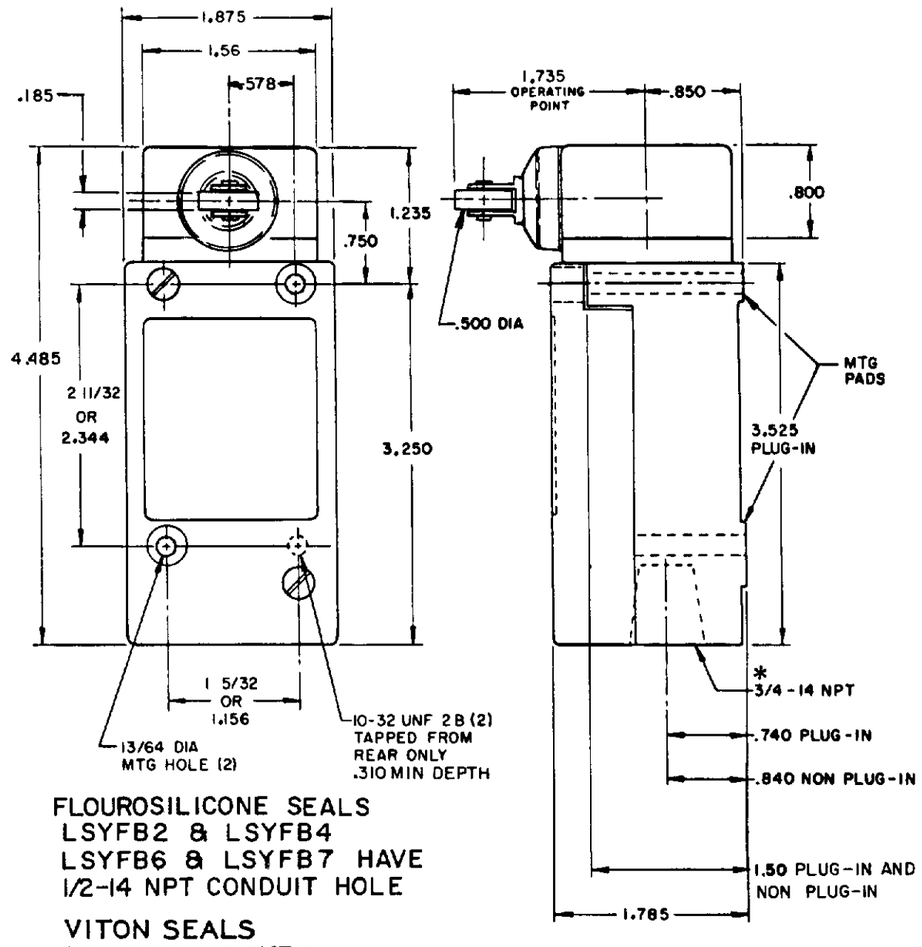

FLOUROSILICONE SEALS
LSYFB2 & LSYFB4
LSYFB6 & LSYFB7 HAVE
1/2-14 NPT CONDUIT HOLE

VITON SEALS
LSYFC2 & LSYFC4
LSYFC6 & LSYFC7

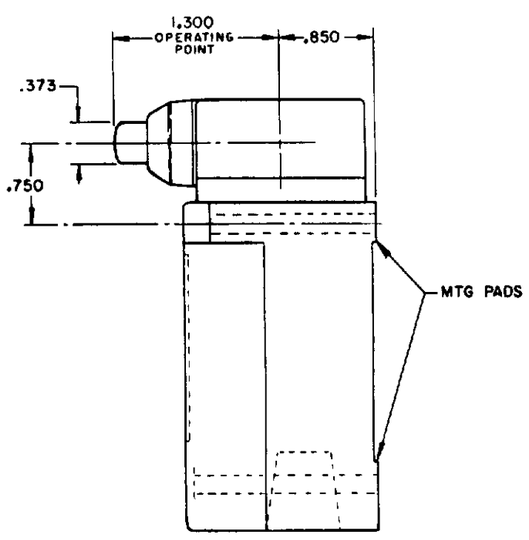

FLOUROSILICONE SEALS
LSYEB1 & LSYEB3

VITON SEALS
LSYEC1 & LSYEC3

SINGLE POLE PLUG-IN ONLY

WITH INDICATOR LAMP

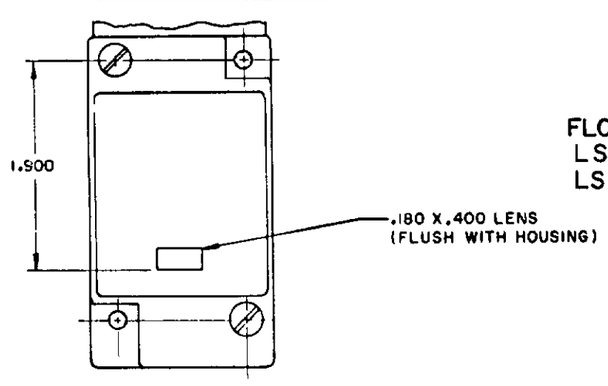

120 LAMP VOLTAGE -
LSYFB5, LSYEB5, LSYWB5
LSYFC5, LSYEC5, LSYWC5

240 LAMP VOLTAGE -
LSYFB8, LSYEB8, LSYWB8
LSYFC8, LSYEC8, LSYWC8

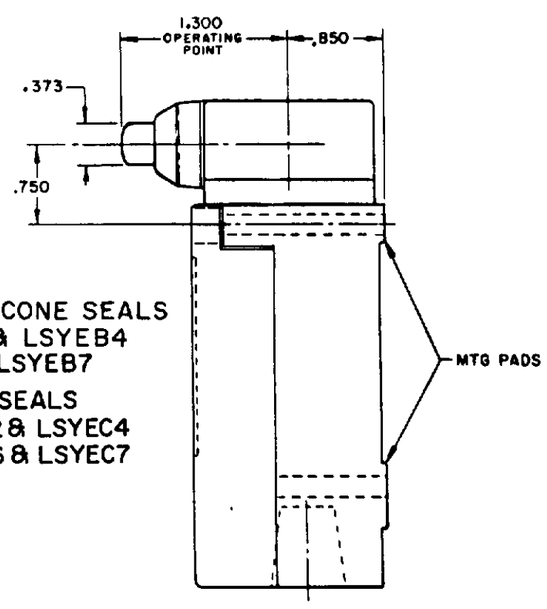

FLOUROSILICONE SEALS
LSYEB2 & LSYEB4
LSYEB6 & LSYEB7

VITON SEALS
LSYEC2 & LSYEC4
LSYEC6 & LSYEC7

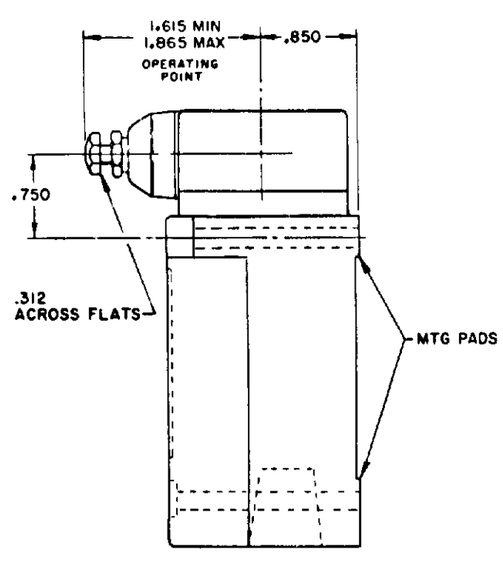

FLOUROSILICONE SEALS
LSYWB1 & LSYWB3

VITON SEALS
LSYWC1 & LSYWC3

MANIFOLD MOUNT (PLUG-IN ONLY)

SINGLE POLE AND DOUBLE POLE

TYPE LSYA THROUGH LSYW SERIES

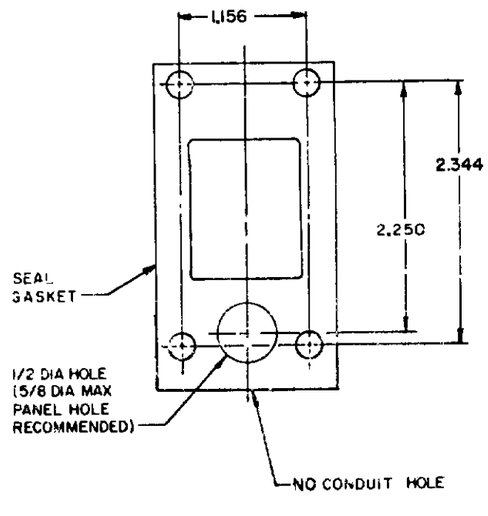

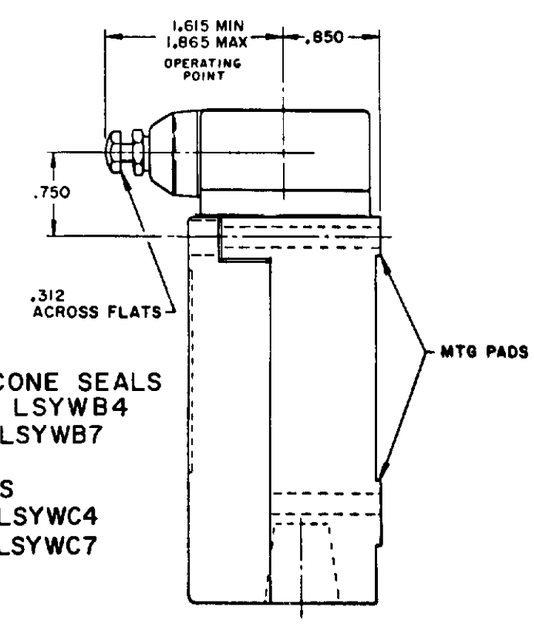

FLOUROSILICONE SEALS
LSYWB2 & LSYWB4
LSYWB6 & LSYWB7

VITON SEALS
LSYWC2 & LSYWC4
LSYWC6 & LSYWC7

NOTES:
1 - ALL UNITS AVAILABLE WITH FLOUROSILICONE AND VITON SEALS

THIS DRAWING COVERS A PROPRIETARY ITEM AND IS THE PROPERTY OF MICRO SWITCH A DIVISION OF HONEYWELL. THIS DRAWING IS NOT TO BE COPIED OR USED WITHOUT THE APPROVAL OF MICRO SWITCH

MICRO SWITCH
FREEPORT ILLINOIS U.S.A.
A DIVISION OF HONEYWELL
FED MFG CODE 9 020

SWITCH - ENCLOSED

CATALOG LISTING
LSY SERIES
CHART 1

SCALE NONE
DO NOT SCALE PRINT

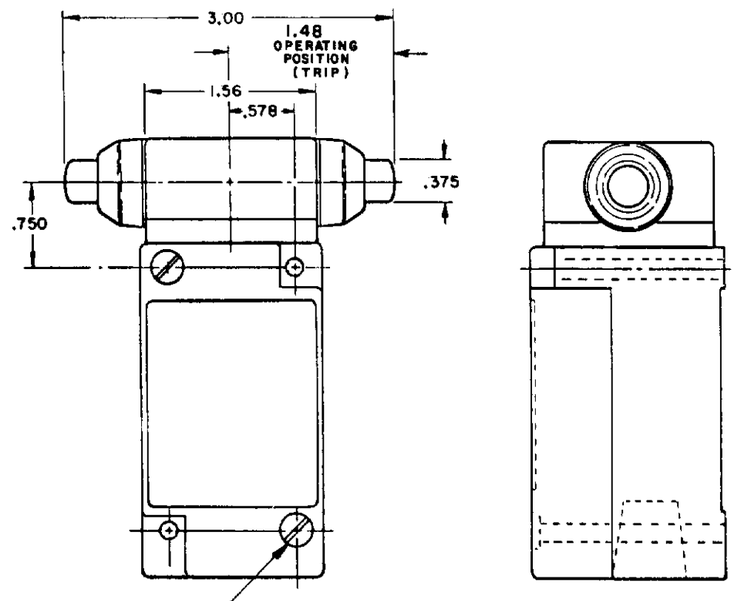

FLOUROSILICONE SEALS
LSYGB1 & LSYGB3

VITON SEALS
LSYGC1 & LSYGC3

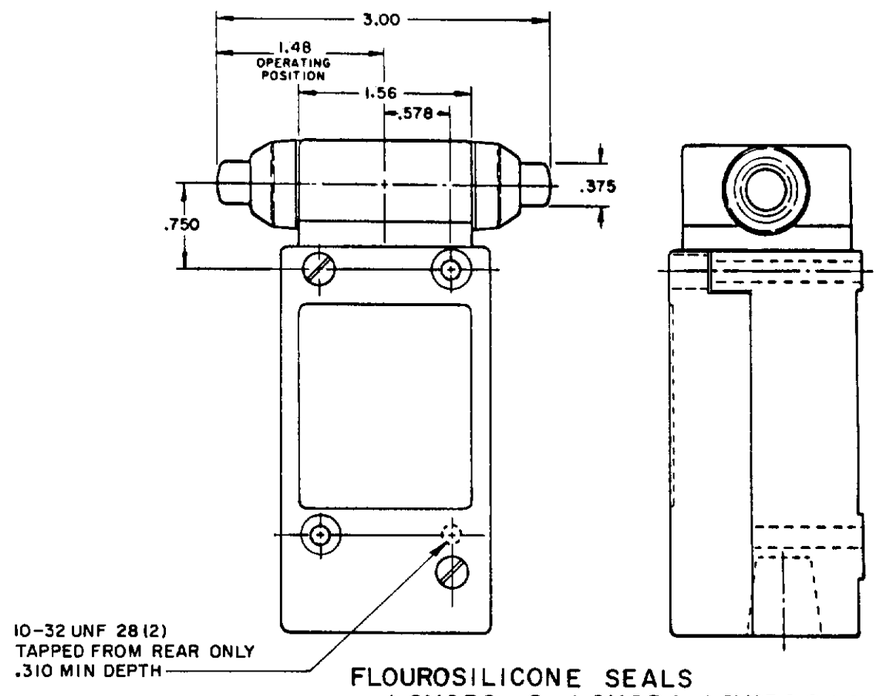

FLOUROSILICONE SEALS
LSYGB2 & LSYGB4, LSYGB6 & LSYGB7 HAVE 1/2 CONDUIT HOLE)

VITON SEALS
LSYGC2 & LSYGC4 (LSYGC6 & LSYGC7 HAVE 1/2 CONDUIT HOLE)

INITIAL POSITION (FREE POSITION)
OPERATING POINT
FULL TRAVEL

PRETRAVEL
DIFFERENTIAL TRAVEL
OVERTRAVEL

OPERATING POINT GIVEN IN RELATION TO TOP MOUNTING HOLE

TOP PLUNGER TYPES

CHARACTERISTICS	LSYC PLUNGER		LSYD ROLLER PLUNGER		LSYV ADJ PLUNGER		SEQUENCE BASIC LSYC / LSYD / LSYV
PRETRAVEL (MAX)	.070		.070		.070		1ST STEP .070 2ND STEP .016 MIN ADD'L
DIFFERENTIAL TRAVEL (MAX)	SINGLE POLE .015	DOUBLE POLE .020	SINGLE POLE .015	DOUBLE POLE .020	SINGLE POLE .015	DOUBLE POLE .020	.015 EACH STEP
OVERTRAVEL (MIN)	.190		.190		.190		.170
OPERATING FORCE (MAX)	4 LBS		4 LBS		4 LBS		4 LBS
OPERATING POINT	1.805 ± .030		2.200 ± .040		2.085 MIN	2.335 MAX	1ST STEP 1.815±.030 / 2.210±.040 / 2.095 MIN / 2.345 MAX
FULL OVERTRAVEL FORCE (MAX)	7 LBS		7 LBS		7 LBS		7 LBS

OPERATING POINT GIVEN IN RELATION TO CENTER OF HEAD

SIDE PLUNGER TYPES

CHARACTERISTICS	LSYE PLUNGER	LSYF ROLLER PLUNGER	LSYW ADJ PLUNGER		LSYG PLUNGER MAINTAINED	SEQUENCE BASIC LSYE / LSYF / LSYW
PRETRAVEL (MAX)	.100	.100	.100		.170	1ST STEP .100 2ND STEP .020 MIN ADD'L
DIFFERENTIAL TRAVEL (MAX)	.045	.045	.045		.090	.025 EACH STEP
OVERTRAVEL (MIN)	.190	.190	.190		.080	.170
OPERATING FORCE (MAX)	6 LBS	6 LBS	6 LBS		10 LBS	6 LBS
OPERATING POINT	1.300 ± .030	1.735 ± .040	1.615 MIN	1.865 MAX	1.480 ± .030	1ST STEP 1.310±.030 / 1.745±.040 / 1.625 MIN / 1.875 MAX
FULL OVERTRAVEL FORCE (MAX)	6 LBS	6 LBS	6 LBS		10 LBS	6 LBS

MICRO SWITCH
FREEPORT ILLINOIS U.S.A.
A DIVISION OF HONEYWELL
FED MFG CODE 91929
THIS DRAWING COVERS A PROPRIETARY ITEM AND IS THE PROPERTY OF MICRO SWITCH A DIVISION OF HONEYWELL. THIS DRAWING IS NOT TO BE COPIED OR USED WITHOUT THE APPROVAL OF MICRO SWITCH
SWITCH-ENCLOSED
CATALOG LISTING
LSY SERIES
CHART 1
TOLERANCES: APPLY TO DESIGN UNITS. CONVERSIONS ARE ONLY FOR REFERENCE. UNLESS NOTED TOLERANCES ARE ±
DESIGN UNITS: SI METRIC / US CUSTOMARY
RAW MATERIAL—COMMERCIAL STANDARD
MICRO SWITCH STANDARDS APPLY
DIMENSIONS ARE TO BE MET BEFORE PROTECTIVE COATINGS ARE APPLIED
WEIGHT
SCALE NONE
DO NOT SCALE PRINT
THIRD ANGLE PROJECTION

WOBBLE STICK

SINGLE POLE

DOUBLE POLE

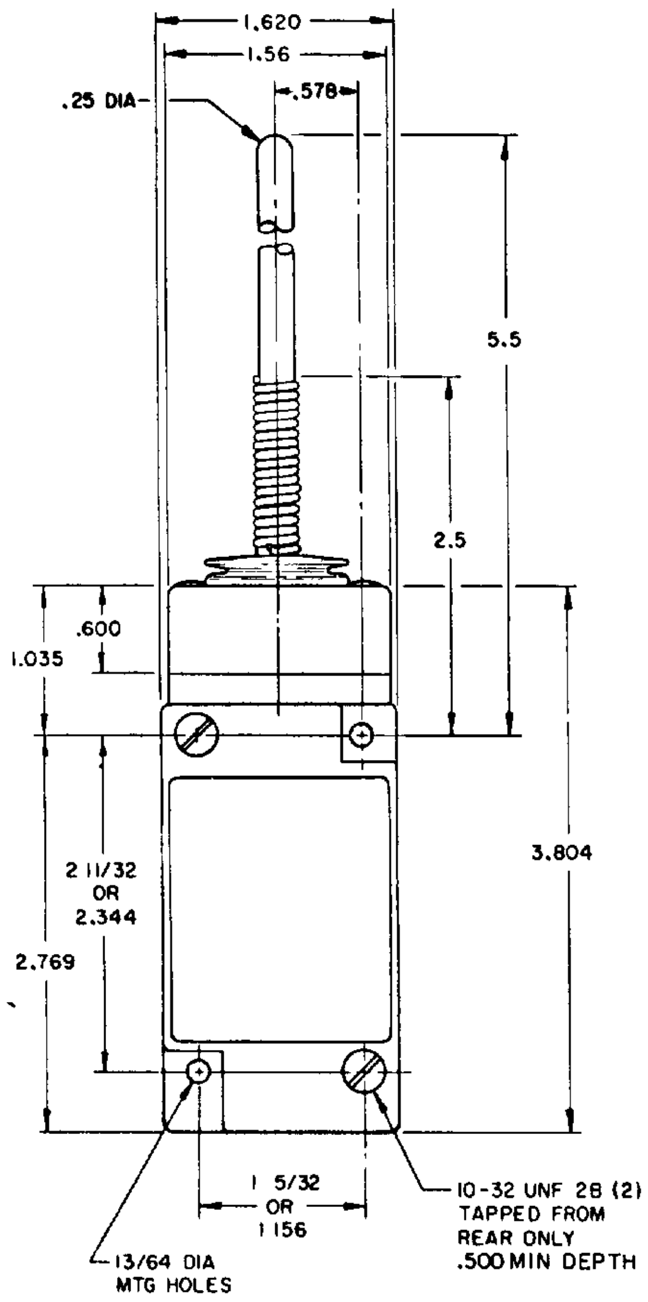

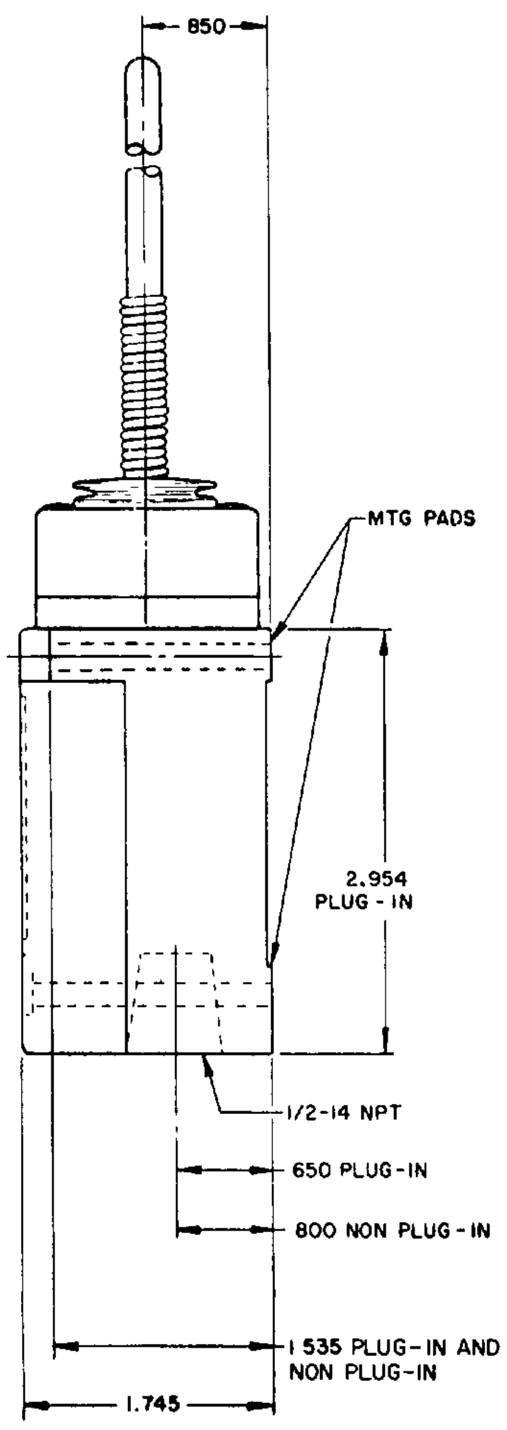

PLASTIC EXTENSION
TYPE 7A ACTUATOR

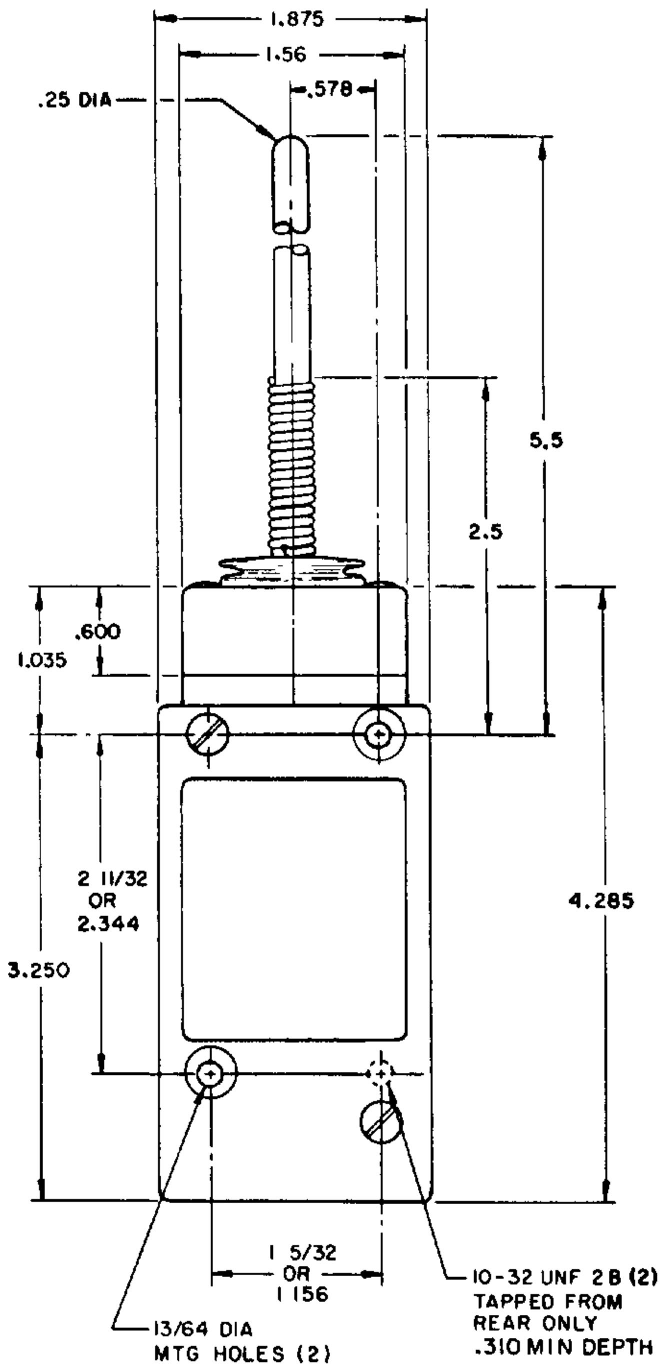

PLASTIC EXTENSION
TYPE 7A ACTUATOR

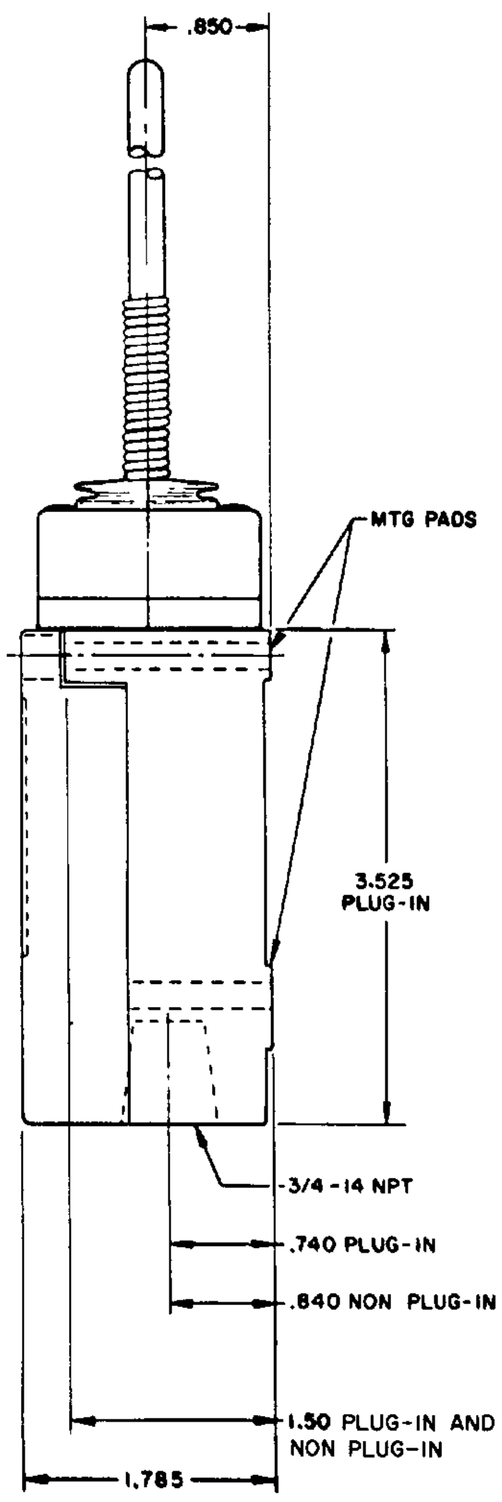

REPLACEMENT ACTUATOR
LSZ 4009

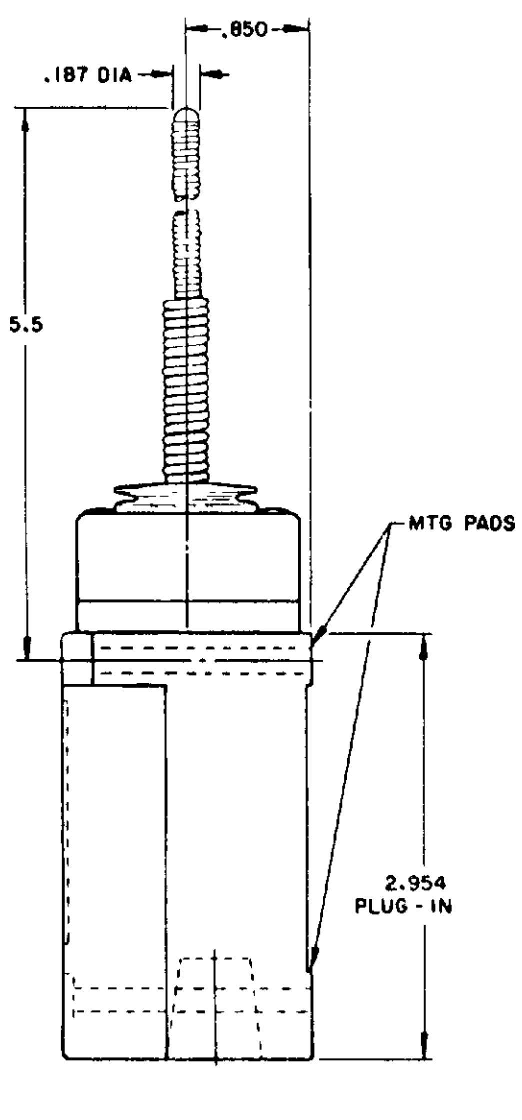

CABLE EXTENSION
TYPE 7N ACTUATOR

MANIFOLD MOUNT (PLUG-IN ONLY)
SINGLE POLE AND DOUBLE POLE
TYPE LSYA THROUGH LSYW SERIES

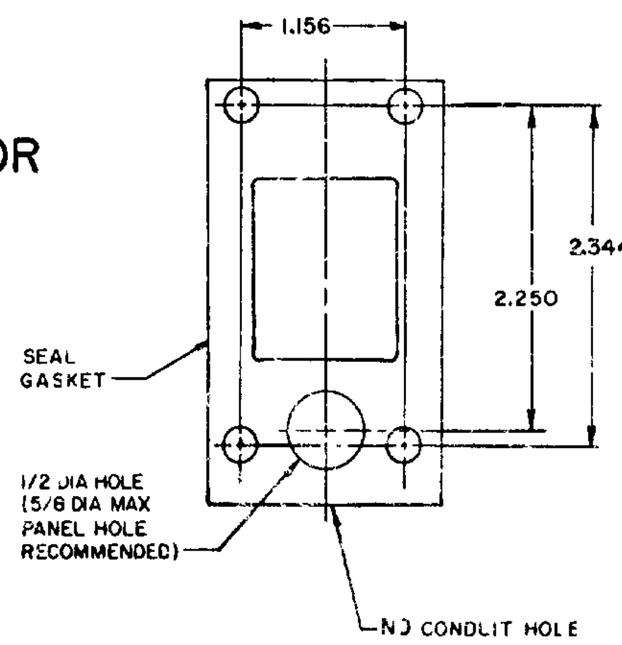

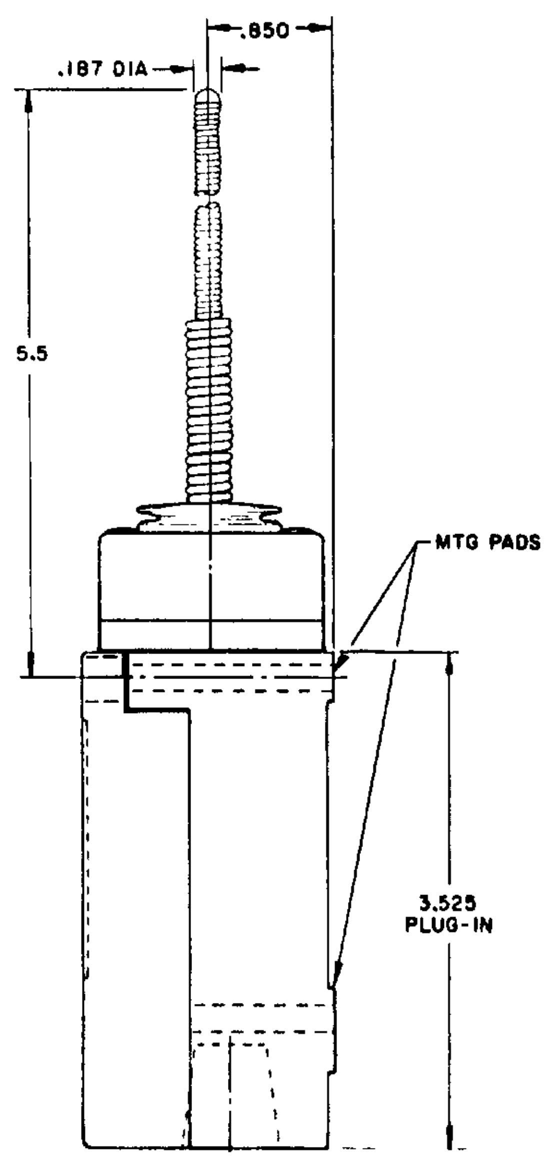

CABLE EXTENSION
TYPE 7N ACTUATOR

REPLACEMENT ACTUATOR
LSZ 4011

NOTES:
1 - ALL UNITS AVAILABLE WITH FLOUROSILICONE AND VITON SEALS

MICRO SWITCH
FREEPORT ILLINOIS U S A
A DIVISION OF HONEYWELL
FED MFG CODE 91929

THIS DRAWING COVERS A PROPRIETARY ITEM AND IS THE PROPERTY OF MICRO SWITCH A DIVISION OF HONEYWELL THIS DRAWING IS NOT TO BE COPIED OR USED WITHOUT THE APPROVAL OF MICRO SWITCH

SWITCH-ENCLOSED

CATALOG LISTING
LSY SERIES
CHART 1

SCALE NONE
DO NOT SCALE PRINT

REPLACEMENT ACTUATOR LSZ4010

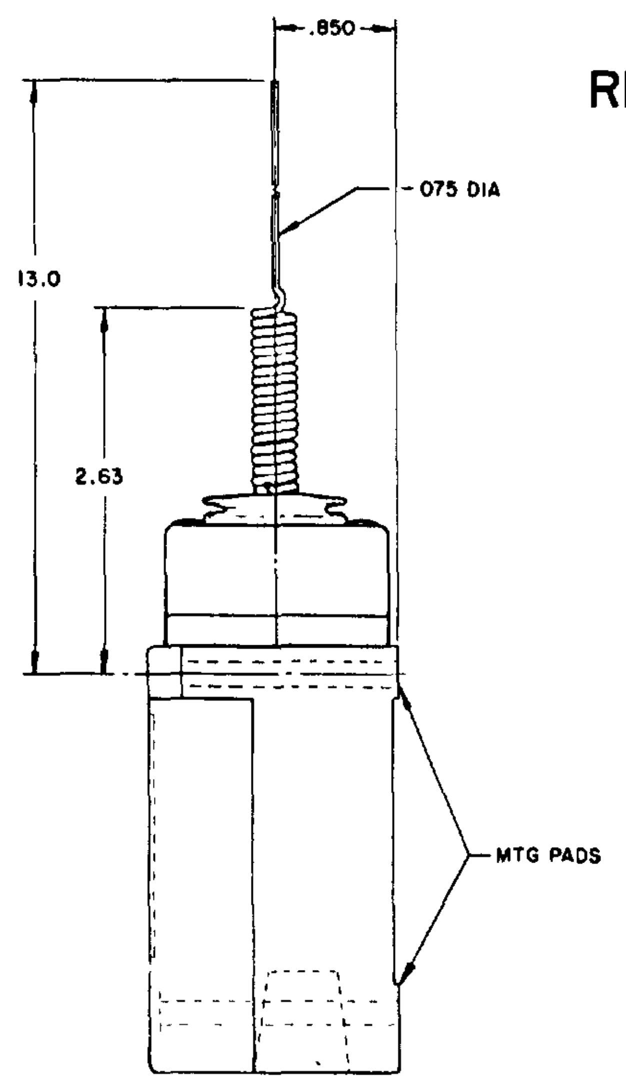

SINGLE POLE PLUG-IN ONLY

WITH INDICATOR LAMP

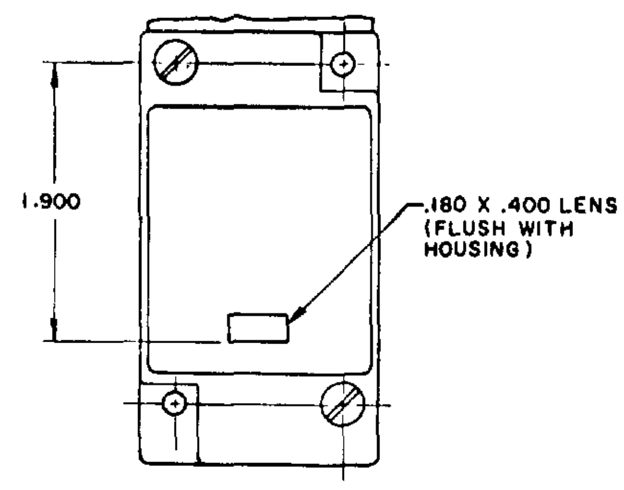

120 LAMP VOLTAGE TYPE-LSYJB5 & LSYJC5
240 LAMP VOLTAGE TYPE-LSYJB8 & LSYJC8

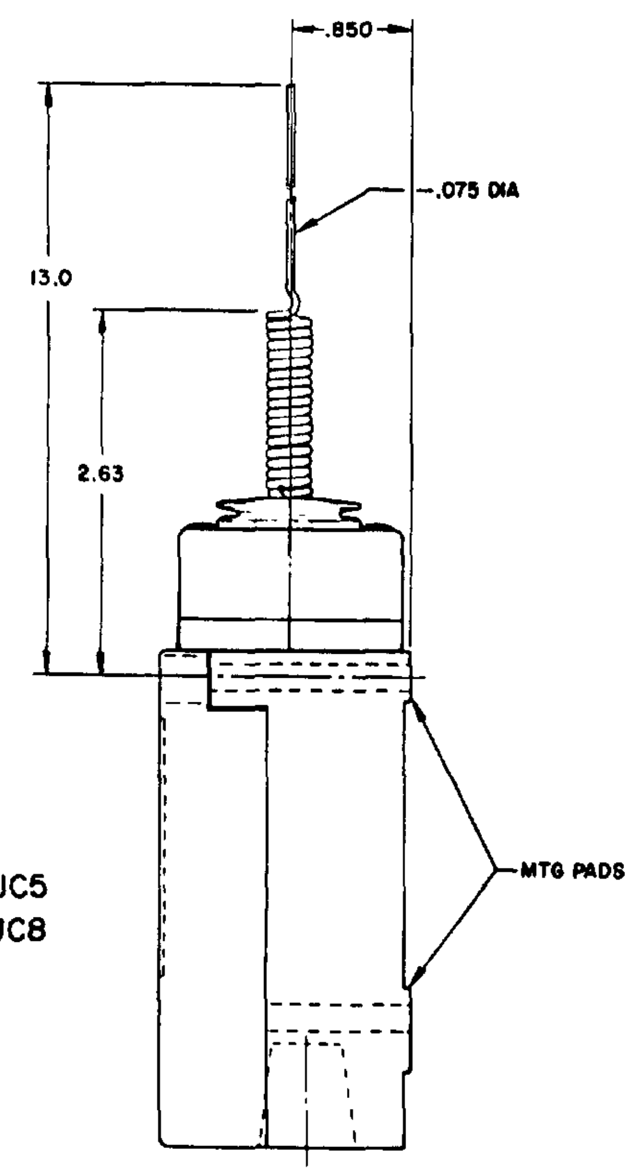

WIRE EXTENSION TYPE 7M ACTUATOR
FLOUROSILICONE SEALS
LSYJB1 & LSYJB3

VITON SEALS
LSYJC1 & LSYJC3

WIRE EXTENSION TYPE 7M ACTUATOR
FLOUROSILICONE SEALS
LSYJB2 & LSYJB4
LSYJB6 & LSYJB7 HAVE 1/2 – 14 NPT CONDUIT HOLE

VITON SEALS LSYJC2 & LSYJC4
LSYJC6 & LSYJC7 HAVE 1/2 – 14 NPT CONDUIT HOLE

REPLACEMENT ACTUATOR LSZ4010

CAT WHISKER

SINGLE POLE

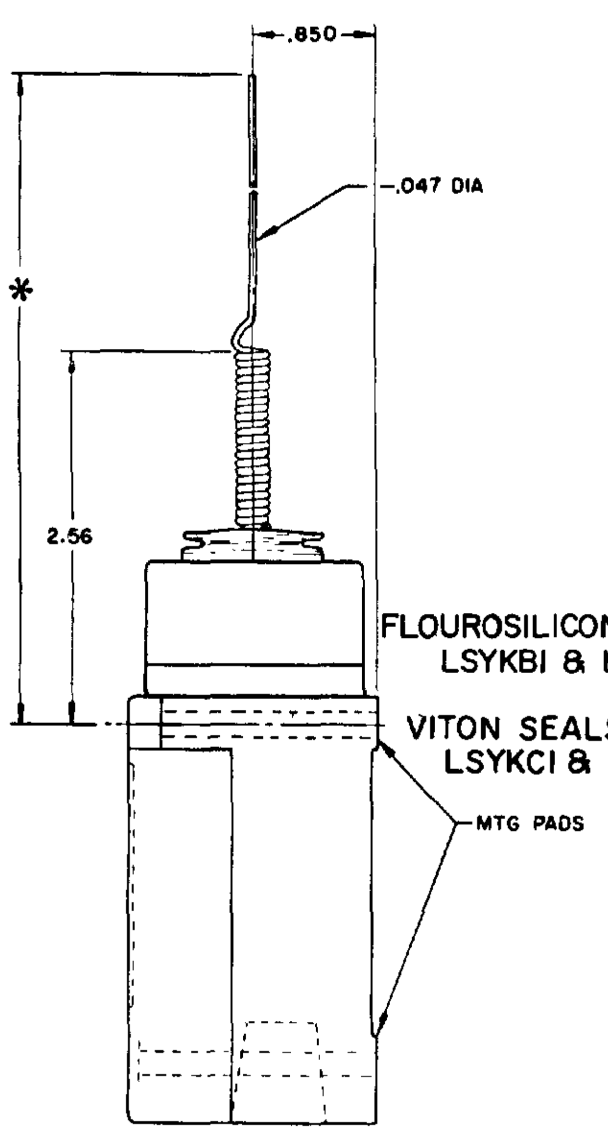

FLOUROSILICONE SEALS
LSYKB1 & LSYKB3

VITON SEALS
LSYKC1 & LSYKC3

WIRE EXTENSION
*TYPE 8A ACTUATOR 5.5 IN.
TYPE 8B ACTUATOR 7.5 IN.
TYPE 8C COIL ACTUATOR 5.5 IN

SINGLE POLE PLUG-IN ONLY

WITH INDICATOR LAMP

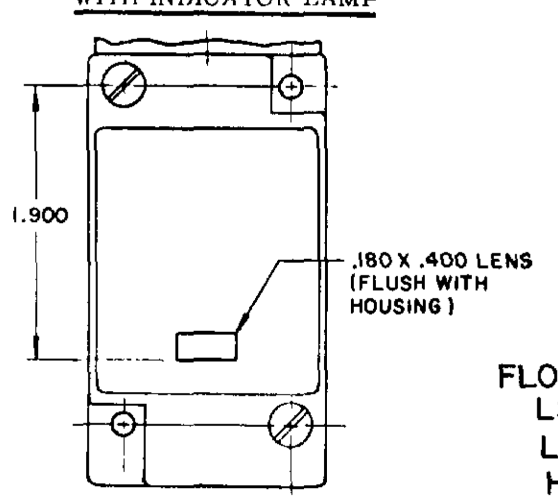

FLOUROSILICONE SEALS
120 LAMP VOLTAGE
LSYKB5 CAT WHISKER LSYBB5 TOP ROTARY
240 LAMP VOLTAGE
LSYKB8 CAT WHISKER LSYBB8 TOP RATARY

VITON SEALS
120 LAMP VOLTAGE
LSYKC5 CAT WHISKER LSYBC5 TOP ROTARY
240 LAMP VOLTAGE
LSYKC8 CAT WHISKER LSYBC8 TOP ROTARY

DOUBLE POLE

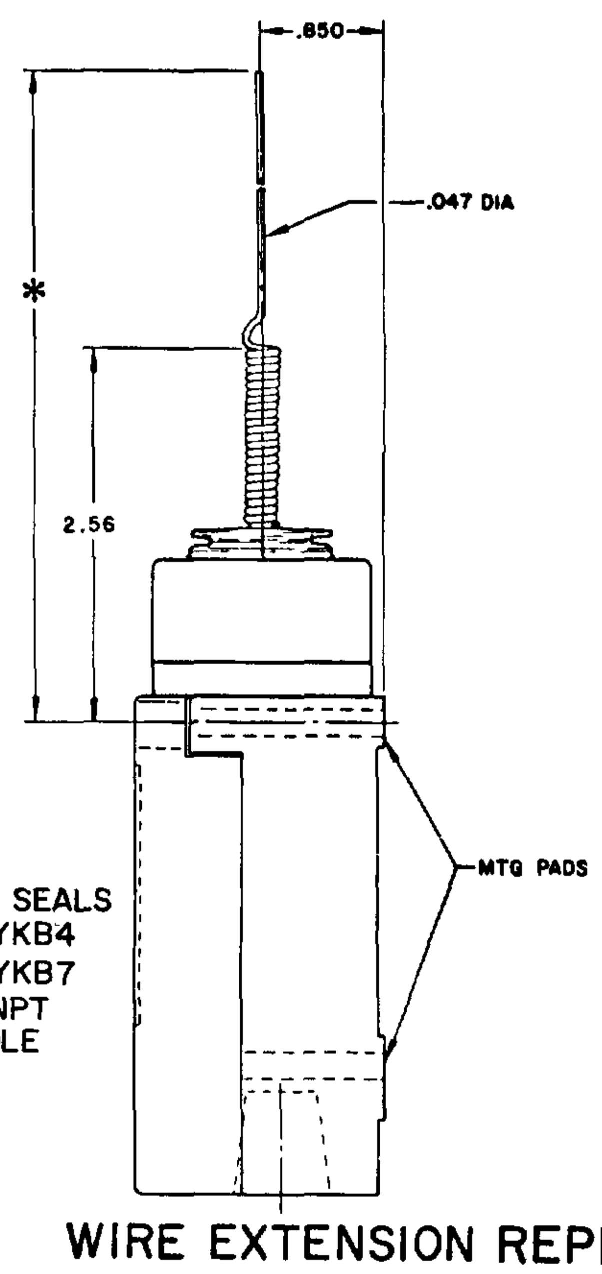

FLOUROSILICONE SEALS
LSYKB2 & LSYKB4
LSYKB6 & LSYKB7
HAVE 1/2-14 NPT
CONDUIT HOLE

WIRE EXTENSION REPLACEMENTS
*TYPE 8A ACTUATOR 5.5 IN. - LSZ 4012
TYPE 8B ACTUATOR 7.5 IN. - LSZ 4013
TYPE 8C ACTUATOR 5.5 IN. - LSZ 4014

	CAT WHISKER			WOBBLE STICK		
PRETRAVEL (APPROX) IN. RADIUS	5 1/2" COIL	5 1/2" WIRE	7 1/2" WIRE	ROD	CABLE	WIRE
	2	2	4.5	1.0	1.5	4.0
OPERATING FORCE-OZ (MAX)	7.0	5.0	3.0	10.0	7.0	5.0

NOTE-
1 - ALL UNITS AVAILABLE WITH FLOUROSILICONE AND VITON SEALS

MICRO SWITCH
FREEPORT ILLINOIS U S A
A DIVISION OF HONEYWELL
FED MFG CODE 91929

THIS DRAWING COVERS A PROPRIETARY ITEM AND IS THE PROPERTY OF MICRO SWITCH A DIVISION OF HONEYWELL. THIS DRAWING IS NOT TO BE COPIED OR USED WITHOUT THE APPROVAL OF MICRO SWITCH

SWITCH-ENCLOSED

CATALOG LISTING
LSY SERIES
CHART 1

SCALE NONE
DO NOT SCALE PRINT

CONVERSION BASES

SINGLE POLE (SIDE ROTARY) LSZ 4003

DOUBLE POLE (SIDE ROTARY) LSZ4004

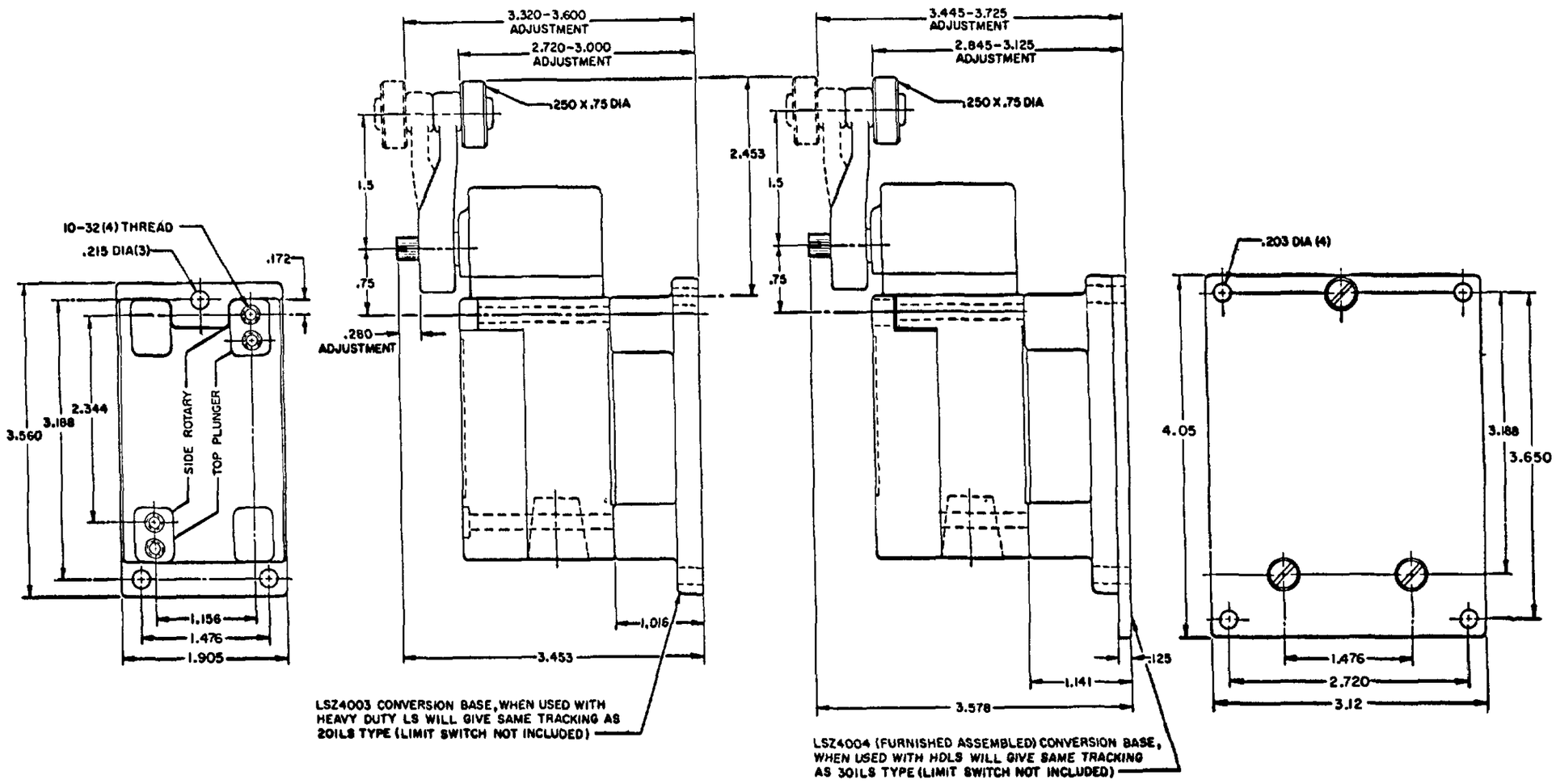

SINGLE POLE TOP PLUNGER LSZ4003

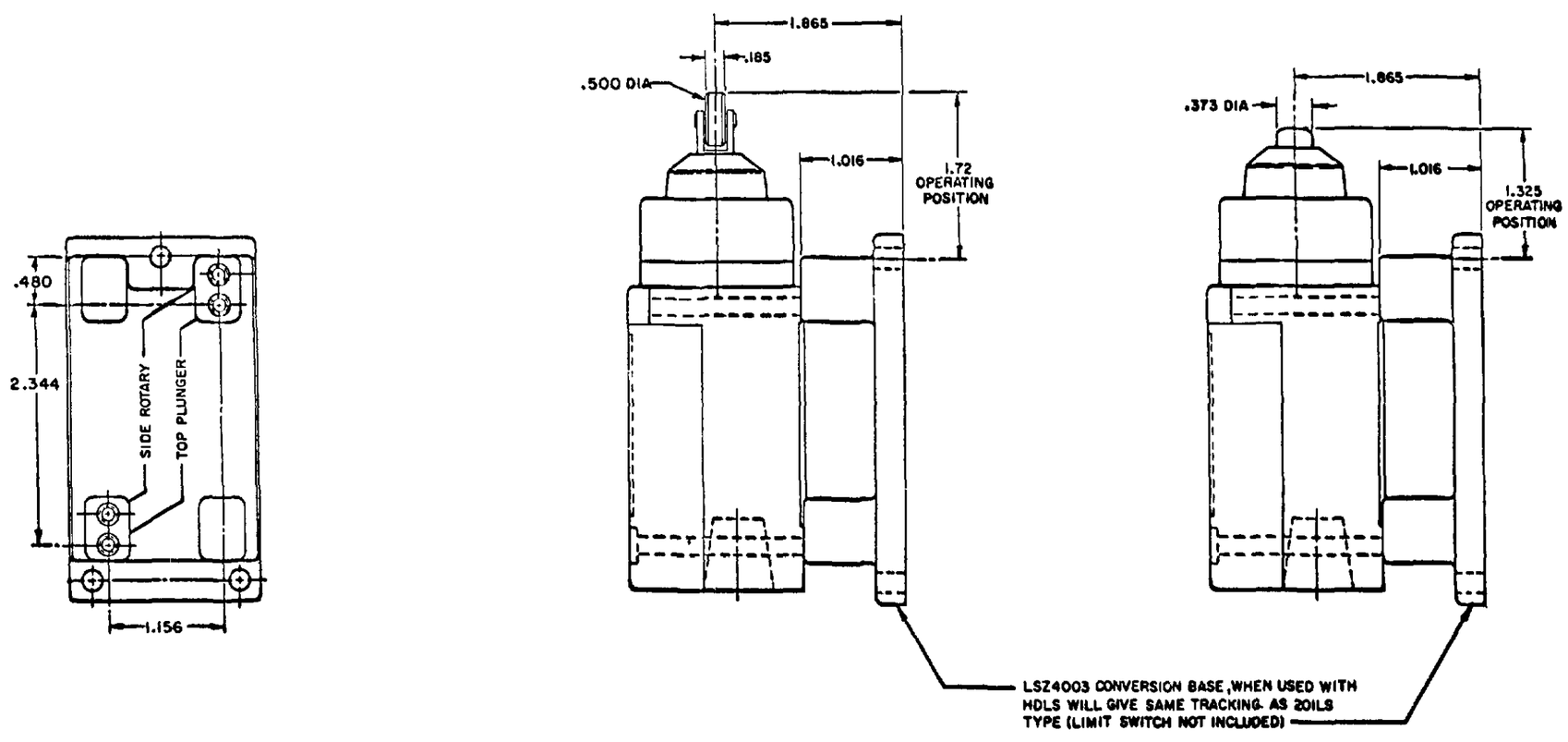

MICRO SWITCH
FREEPORT ILLINOIS U S A
A DIVISION OF HONEYWELL
FED MFG. CODE 81529
THIS DRAWING COVERS A PROPRIETARY ITEM AND IS THE PROPERTY OF MICRO SWITCH A DIVISION OF HONEYWELL. THIS DRAWING IS NOT TO BE COPIED OR USED WITHOUT THE APPROVAL OF MICRO SWITCH

SWITCH – ENCLOSED

CATALOG LISTING LSY SERIES CHART 1

SCALE FULL
DO NOT SCALE PRINT

ALL HEAD TYPES WITH SEALS OF (3)	CELLULUBE	DETERGENT	5 STAR	ASTM #1	ASTM #2	ASTM #3	ASTM #4	HOUGHTO SAFE 271	HOUGHTO SAFE 1010, 1055, 1120	MINERAL OIL	PETR. OIL CRUDE	SILICON GR & OIL	SUNSAFE	BEER	STODDARD SOLV.	CHLORINATED SOLVENTS	CITRIC ACID	DI-ESTER SYN. LUBRICANTS	OZONE	PYDRAU:	PYROGUARD	PETRO. BASE HYDRAULIC OIL	LARD OIL	SILICATE ESTERS
FLUOR-SILICONE (1)	4	1	1	1	1	1	2	2	4	1	1	1	1	1	1	1	2	1	4	4	1	1	1	1
VITON (2)	1	1	1	1	1	1	1	1	1	1	1	1	1	1	1	1	1	1	1	1	1	1	1	1

CODE: 1 SATISFACTORY 2 FAIR 3 DOUBTFUL 4 UNSATISFACTORY

(1) FLUORSILICONE SEAL (LSYAB**) FOR LOW TEMPERATURE APPLICATIONS

(2) VITON SEALS (LSYAC**) FOR FIRE-RESISTANT FLUIDS

(3) ALL EXCEPT A60

TEMPERATURE LIMITATIONS FOR DEVICES WITH FLUORSILICONE (LSYAB**) AND VITON (LSYAC**) SEALS

	LOW LIMIT	HIGH LIMIT
LSYAB	-40°F	+250°F
LSYAC	+10°F	+250°F
LSYBB	-20°F	+250°F
LSYBC	+30°F	+250°F
LSYCB	-40°F	+200°F
LSYCC	+10°F	+250°F
LSYDB	-40°F	+200°F
LSYDC	+10°F	+250°F
LSYEB	-40°F	+200°F
LSYEC	+10°F	+250°F
LSYFB	-40°F	+200°F
LSYFC	+10°F	+250°F
LSYGB	-20°F	+200°F
LSYGC	+30°F	+250°F
LSYHB	-20°F	+250°F
LSYHC	+30°F	+250°F
LSYJB	-40°F	+250°F
LSYJC	+30°F	+250°F
LSYKB	-20°F	+250°F
LSYKC	+30°F	+250°F
LSYLB	-40°F	+250°F
LSYLC	+10°F	+250°F
LSYMB	-40°F	+250°F
LSYMC	+10°F	+250°F
LSYNB	-20°F	+250°F
LSYNC	+30°F	+250°F
LSYPB	-40°F	+250°F
LSYPC	+10°F	+250°F
LSYRB	-20°F	+250°F
LSYRC	+30°F	+250°F
LSYVB	-40°F	+200°F
LSYVC	+10°F	+250°F
LSYWB	-40°F	+200°F
LSYWC	+10°F	+250°F

CATALOG LISTING M LSY SERIES CHART 1 PAGE 10 OF 10
ISSUE 7 RELEASE NO CO-78499 10JUL07 PSR LSY SERIES

REVISIONS: A CO-95948 CSL 10 JAN 00; B 200704 CSL 23 JUN 00; C 200853 CSL 21 JUL 00; D 202198 CSL 23 JAN 01; E 0012601 SPK 19APR05; F 0031956 BS 10JUL07

19APR05 AK; 12 SEP 94 JAF; 24 AUG 94 GJW DRAWN; RASTER

THIS DRAWING COVERS A PROPRIETARY ITEM AND IS THE PROPERTY OF MICRO SWITCH A DIVISION OF HONEYWELL. THIS DRAWING IS NOT TO BE COPIED OR USED WITHOUT THE APPROVAL OF MICRO SWITCH

MICRO SWITCH
FREEPORT ILLINOIS U S A
A DIVISION OF HONEYWELL
FED MFG CODE 91929

SWITCH - ENCLOSED

CATALOG LISTING
LSY SERIES
CHART 1

SCALE
DO NOT SCALE PRINT

OCEAN CHIPS
Океан Электроники
Поставка электронных компонентов

Компания «Океан Электроники» предлагает заключение долгосрочных отношений при поставках импортных электронных компонентов на взаимовыгодных условиях!

Наши преимущества:

- Поставка оригинальных импортных электронных компонентов напрямую с производств Америки, Европы и Азии, а так же с крупнейших складов мира;
- Широкая линейка поставок активных и пассивных импортных электронных компонентов (более 30 млн. наименований);
- Поставка сложных, дефицитных, либо снятых с производства позиций;
- Оперативные сроки поставки под заказ (от 5 рабочих дней);
- Экспресс доставка в любую точку России;
- Помощь Конструкторского Отдела и консультации квалифицированных инженеров;
- Техническая поддержка проекта, помощь в подборе аналогов, поставка прототипов;
- Поставка электронных компонентов под контролем ВП;
- Система менеджмента качества сертифицирована по Международному стандарту ISO 9001;
- При необходимости вся продукция военного и аэрокосмического назначения проходит испытания и сертификацию в лаборатории (по согласованию с заказчиком);
- Поставка специализированных компонентов военного и аэрокосмического уровня качества (Xilinx, Altera, Analog Devices, Intersil, Interpoint, Microsemi, Actel, Aeroflex, Peregrine, VPT, Syfer, Eurofarad, Texas Instruments, MS Kennedy, Miteq, Cobham, E2V, MA-COM, Hittite, Mini-Circuits, General Dynamics и др.);

Компания «Океан Электроники» является официальным дистрибьютором и эксклюзивным представителем в России одного из крупнейших производителей разъемов военного и аэрокосмического назначения **«JONHON»**, а так же официальным дистрибьютором и эксклюзивным представителем в России производителя высокотехнологичных и надежных решений для передачи СВЧ сигналов **«FORSTAR»**.

AVIC JONHON

«JONHON» (основан в 1970 г.)

Разъемы специального, военного и аэрокосмического назначения:

(Применяются в военной, авиационной, аэрокосмической, морской, железнодорожной, горно- и нефтедобывающей отраслях промышленности)

«FORSTAR» (основан в 1998 г.)

ВЧ соединители, коаксиальные кабели, кабельные сборки и микроволновые компоненты:

(Применяются в телекоммуникациях гражданского и специального назначения, в средствах связи, РЛС, а так же военной, авиационной и аэрокосмической отраслях промышленности).

FORSTAR®

Телефон: 8 (812) 309-75-97 (многоканальный)
Факс: 8 (812) 320-03-32
Электронная почта: ocean@oceanchips.ru
Web: http://oceanchips.ru/
Адрес: 198099, г. Санкт-Петербург, ул. Калинина, д. 2, корп. 4, лит. А