MIC2546/2547

Dual Programable Current Limit Switch

General Description

The MIC2546 and MIC2547 are integrated high-side dual power switches optimized for low loss dc power switching and other power management applications, including Advanced Configuration and Power Interface (ACPI). The MIC2546/47 is a cost-effective, highly integrated solution that requires few external components to satisfy USB and ACPI requirements.

Load current management features include a precision resistor-programmable output current-limit and a soft-start circuit which minimizes inrush current when the switch is enabled. Thermal shutdown, along with current-limit, protects theswitch and the attached device.

The MIC2546/47's open-drain flag outputs are used to indicate current-limiting or thermal shutdown to a local controller. The MIC2547 has an additional internal latch which turns the output off upon thermal shutdown providing robust fault control. The enable signal is compatible with both 3V and 5V logic, and is also used as the thermal shutdown latch reset for the MIC2547.

The MIC2546 and MIC2547 are available in active-high and active-low enable versions in 16-pin TSSOP and SOP packages.

Data sheets and support documentation can be found on Micrel's web site at www.micrel.com.

Features

- 2.7V to 5.5V input
- Adjustable current-limit up to 1.5A
- Reverse current flow blocking (no "body diode")
- 100µA typical on-state supply current per channel
- 2µA typical off-state supply current
- 120mΩ maximum on-resistance
- Open-drain fault flag
- Thermal shutdown
- Thermal shutdown output latch (MIC2547)
- 2ms (slow) turn-on and fast turnoff
- Available with active-high or active-low enable

Applications

- USB power distribution
- PCI Bus Power Switching
- Notebook PC
- ACPI power distribution
- PC card hot swap applications
- Inrush current-limiting
- Ideal for dual supply applications

Typical Application

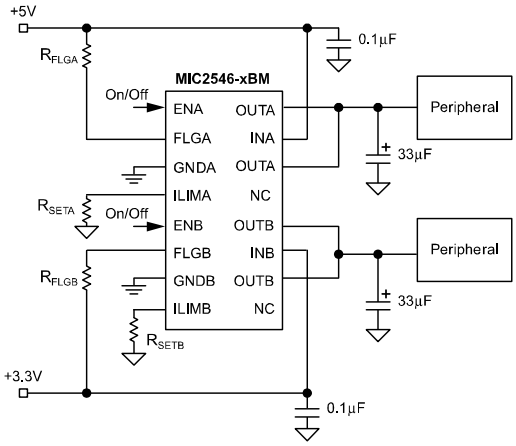

Typical Advanced Configuration and Power Interface (ACPI) Application

UL Recognized Component

Ordering Information

Part Number		Enable	Latch[1]	Junction Temp. Range[1]	Package
Standard	Pb-Free				
MIC2546-1BM	MIC2546-1YM	Active High		–40° to +85°C	16-pin SOP
MIC2546-1BTS	MIC2546-1YTS	Active High		–40° to +85°C	16-pin TSSOP
MIC2546-2BM	MIC2546-2YM	Active Low		–40° to +85°C	16-pin SOP
MIC2546-2BTS	MIC2546-2YTS	Active Low		–40° to +85°C	16-pin TSSOP
MIC2547-1BM	MIC2547-1YM	Active High	●	–40° to +85°C	16-pin SOP
MIC2547-1BTS	MIC2547-1YTS	Active High	●	–40° to +85°C	16-pin TSSOP
MIC2547-2BM	MIC2547-2YM	Active Low	●	–40° to +85°C	16-pin SOP
MIC2547-2BTS	MIC2547-2YTS	Active Low	●	–40° to +85°C	16-pin TSSOP

Note:

1. Thermal Shutdown Latch.

Pin Configuration

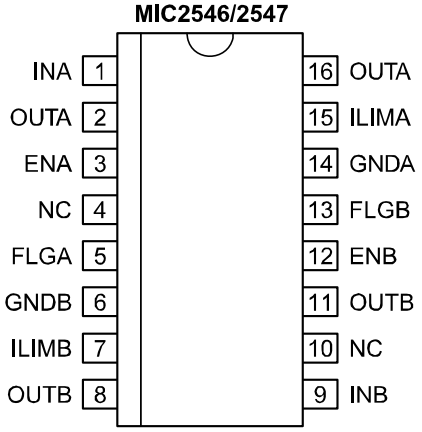

16-Pin SOP (M)
16-Pin TSSOP (TS)

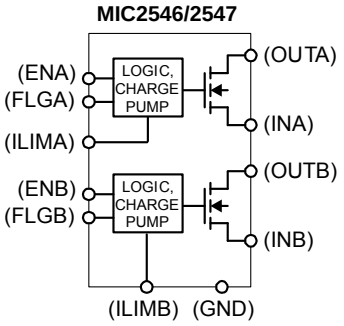

Function Pinout

Pin Description

Pin Number	Pin Name	Pin Function
1	INA	Input A: Output A MOSFET drain. Also supplies internal circuitry.
2, 16	OUTA	Switch A (Output): Output A MOSFET source. Pins 2 and 16 must be externally connected.
3	ENA	Enable A (Input): Logic-compatible enable input. Active- activelow (–2). High input >1.7V typical; low input <1.5V typical. MIC2547 only: Also resets thermal shutdown latch.
4, 10	NC	Not internally connected.
5	FLGA	Fault Flag A (Output): Active-low, open-drain output. Indicates overcurrent or thermal shutdown conditions. MIC2547 only: latched low on thermal shutdown.
6, 14	GNDB, GNDA	Ground. Both pins must be connected to GND.
7	ILIMB	Current Limit Channel B: Sets current-limit threshold using an resistor, R_{SET}, connected to ground. 154Ω < R_{SET} < 2.29kΩ.
8, 11	OUTB	Switch B (Output): Pins 8 and 11 must be externally connected.
9	INB	Input B
12	ENB	Enable B (Input)
13	FLGB	Fault Flag B (Output)
15	ILIMA	Fault Flag B (Output)

Absolute Maximum Ratings[1]

Supply Voltage (V_{IN}) .....+6.0V
Output Voltage (V_{OUT}) .....+6.0V
Output Current (I_{OUT}).....Internally Limited
Enable Input (V_{EN}) .....–0.3V to V_{IN} +0.3V
Fault Flag Voltage (V_{FLG}).....+6.0V
Fault Flag Current (I_{FLG}) 50mA
Storage Temperature (T_S) .....–65°C to +150°C
Junction Temperature (T_J) .....Internally Limited
Lead Temperature (soldering 5 sec.).....260°C
ESD Rating, **Note 3** 2kV

Operating Ratings[2]

Supply Voltage (V_{IN}) ..... +2.7V to +5.5V
Current Limit Set Range.....0.1 to 1.5A
Ambient Temperature Range (T_A) .....–40°C to +85°C
Package Thermal Resistance
SOP (θ_{JA}).....120°C/W
TSSOP (θ_{JA}) .....100°C/W

Electrical Characteristics[4]

V_{IN} = +5V; T_A = 25°C, **bold** values indicate –40°C to +85°C, unless noted.

Symbol	Parameter	Condition	Min	Typ	Max	Units
	Supply Current	Switch off, OUT = open, **Note 4**		1.5	**10**	µA
		Switch on, OUT = open, **Note 4**		200	**320**	µA
V_{EN}	Enable Input Voltage	Enable High, **Note 4**	**2.4**	1.7		V
		Enable Low, **Note 4**		1.5	**0.8**	V
	Enable Input Current	V_{EN} = $V_{OH(MIN)}$ = 2.4V		0.01	1	µA
		V_{EN} = $V_{OH(MAX)}$ = 0.8V		0.01	1	µA
	Enable Input Capacitance	**Note 5**		1		pF
$R_{DS(ON)}$	Switch Resistance	I_{OUT} = 500mA		80	**120**	mΩ
	Current Limit Factor, **Note 6**	I_{OUT} = 500mA to 1.5A, V_{OUT} = 1.0V to 4.0V **Note 6**	184	230	276	V
	Output Leakage Current	Swich off		1	**10**	µA
t_{ON}	Output Turn-On Delay	R_L = 10Ω, C_L = 1µF, **Figure 1a and 1b**	1	2	5	ms
t_R	Output Turn-On Rise Time	R_L = 10Ω, C_L = 1µF, **Figure 1a and 1b**	1	2	5	ms
t_{OFF}	Output Turn-Off Delay	R_L = 10Ω, C_L = 1µF, **Figure 1a and 1b**		22		µs
t_F	Output Turn-Off Fall Time	R_L = 10Ω, C_L = 1µF, **Figure 1a and 1b**		21		µs
	Overtemperature Threshold Shutdown	T_J increasing		140		°C
		T_J decreasing		130		°C
	Error Flag Output Resisitance	V_{IN} = 5V, I_L = 10µA		4	**15**	Ω
		V_{IN} = 3.3V, I_L = 10µA		5	**20**	Ω
	Error Flag Off Current	V_{FLG} = 5V		0.01	**1**	µA
	EN Pulse Reset Width	MIC2547 Thermal Shutdown Latch	5			µs
	V_{IN} to EN Set-Up	MIC2547, **Note 5**	0			µs
	Current-Limit Response Time	V_{OUT} = oV		25		µs
	Overcurrent FLG Response Time	V_{OUT} = V_{IN}/2 to FLG low		5		µs

Notes:

Note 1. Exceeding the absolute maximum rating may damage the device.

Note 2. The device is not guaranteed to function outside its operating rating.

Note 3. Devices are ESD sensitive. Handling precautions recommended. Human body model, 1.5k in series with 100pF.

Note 4. Off is ″ 0.8V and on is ≥ 2.4V for the MIC2546-1 and MIC2547-1. Off is ≥ 2.4V and on is ″ 0.8V for the MIC2546-2 and MIC2547-2. The enable input has about 200mV of hysteresis.

Note 5. Guaranteed by design, but not production tested.

Note 6. Current limit threshold is determined by: $I_{LIMIT} = \frac{230V}{R_{SET}}$, where R_{SET} is in ohms.

Typical Characteristics

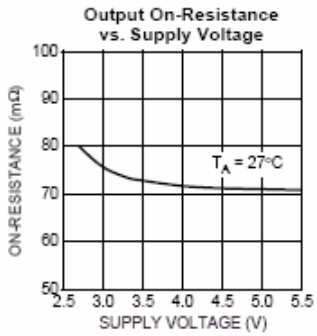

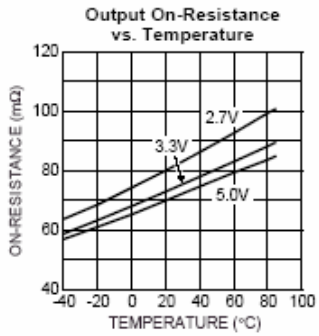

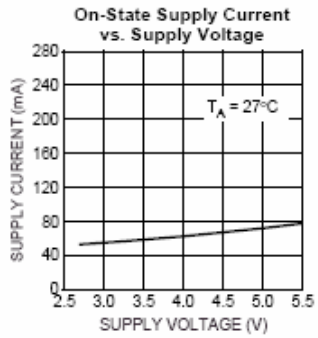

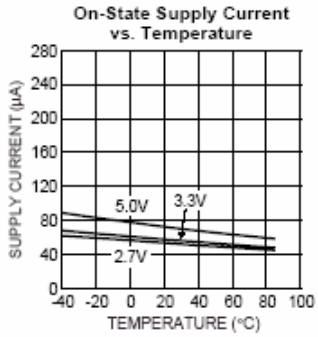

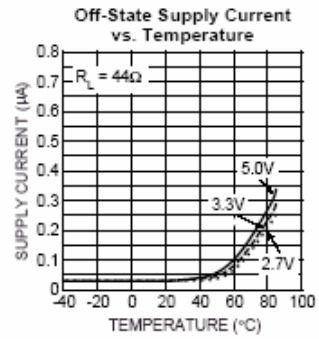

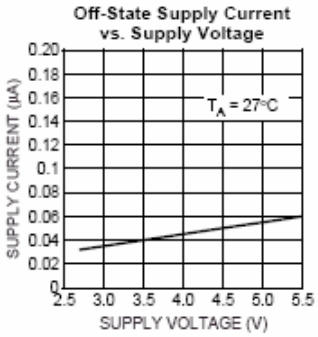

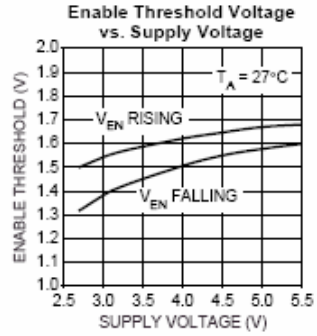

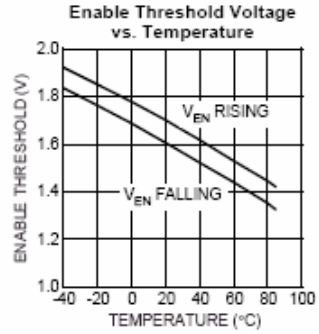

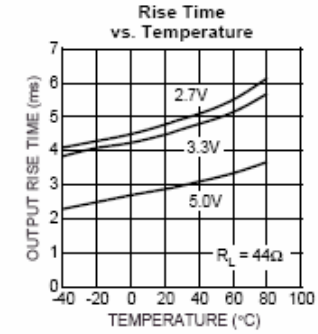

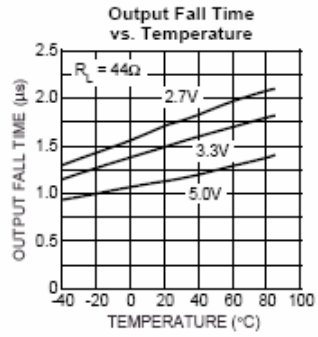

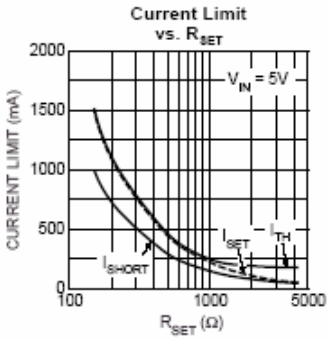

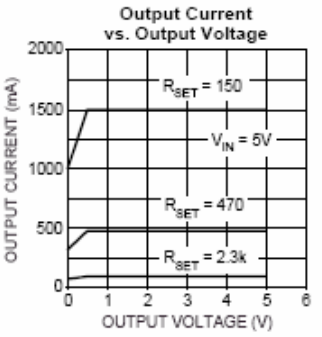

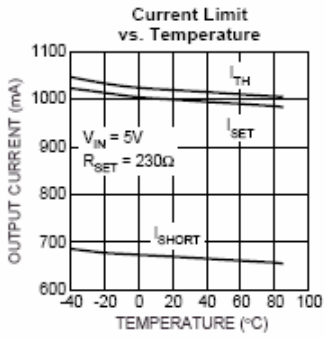
Current Limit
vs. Temperature
OUTPUT CURRENT (mA)
1100
1000
900
800
700
600
-40 -20 0 20 40 60 80 100
TEMPERATURE (°C)
I_TH
I_SET
I_SHORT
V_IN = 5V
R_SET = 230Ω

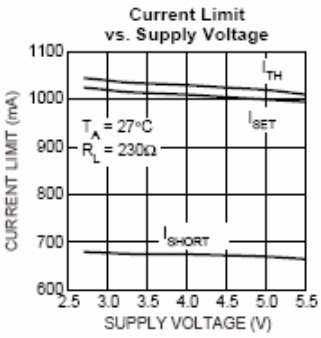
Current Limit
vs. Supply Voltage
CURRENT LIMIT (mA)
1100
1000
900
800
700
600
2.5 3.0 3.5 4.0 4.5 5.0 5.5
SUPPLY VOLTAGE (V)
I_TH
I_SET
I_SHORT
T_A = 27°C
R_L = 230Ω

Functional Characteristics

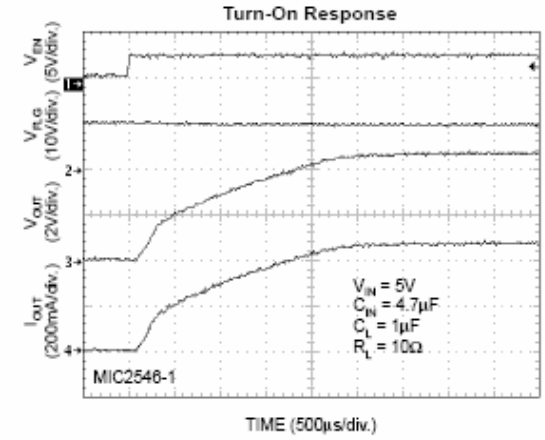

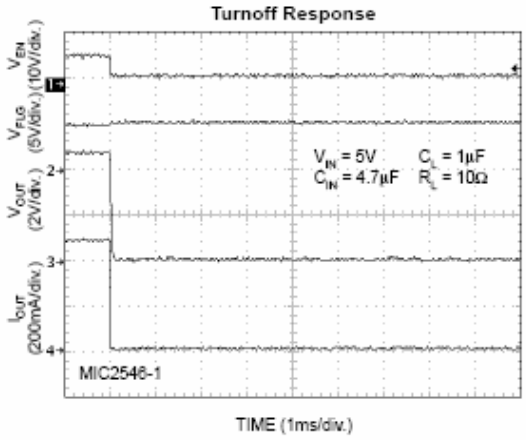

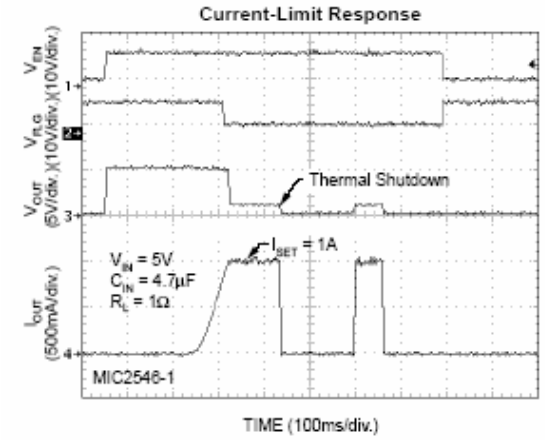

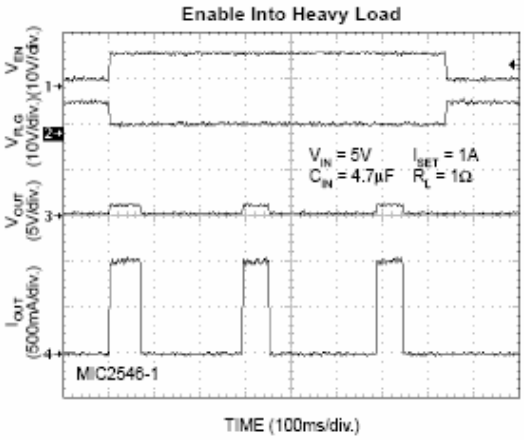

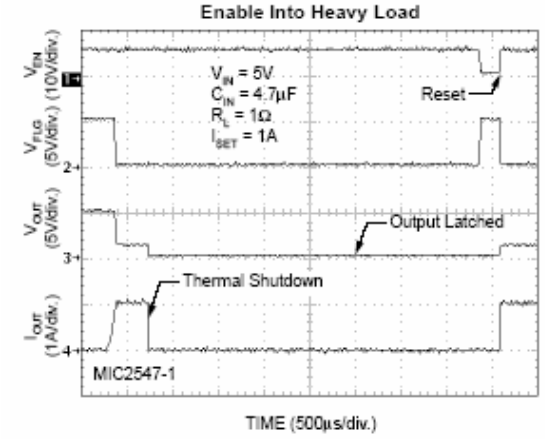

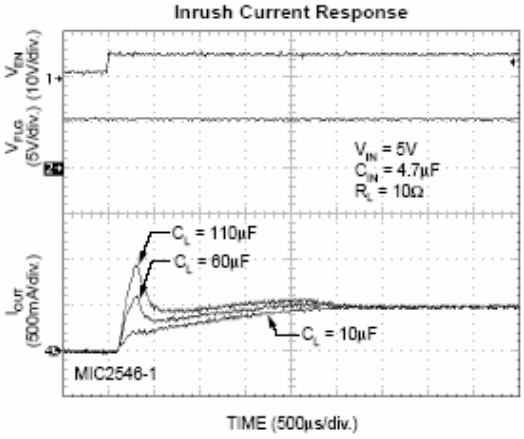

Test Circuit

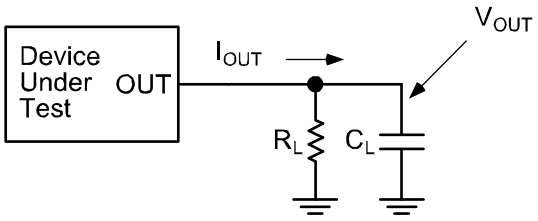

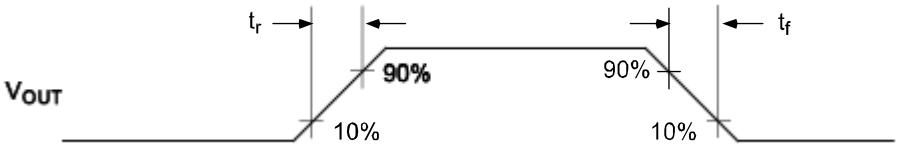

Functional Characteristics Test Circuit

Timing Diagrams

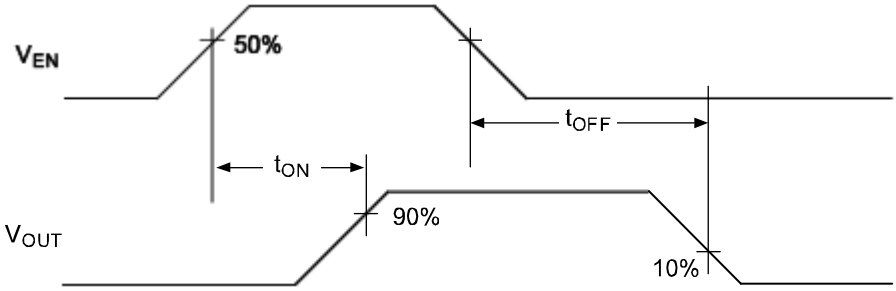

Figure 1a. MIC2546/47-1

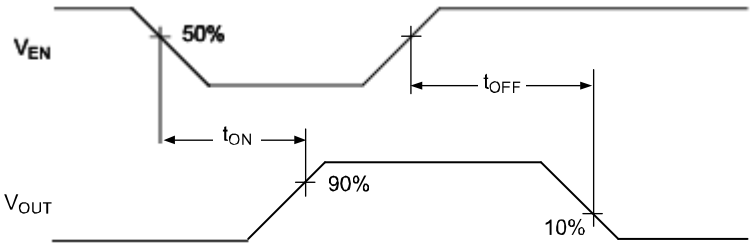

Figure 1b. MIC2546/47-2

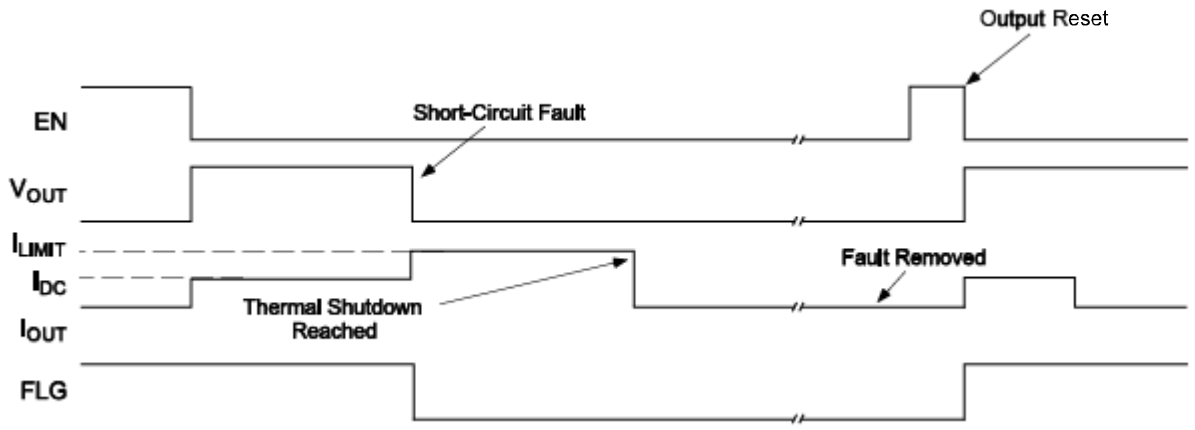

Figure 2a. MIC2547-2 Timing: Output is reset by toggling EN

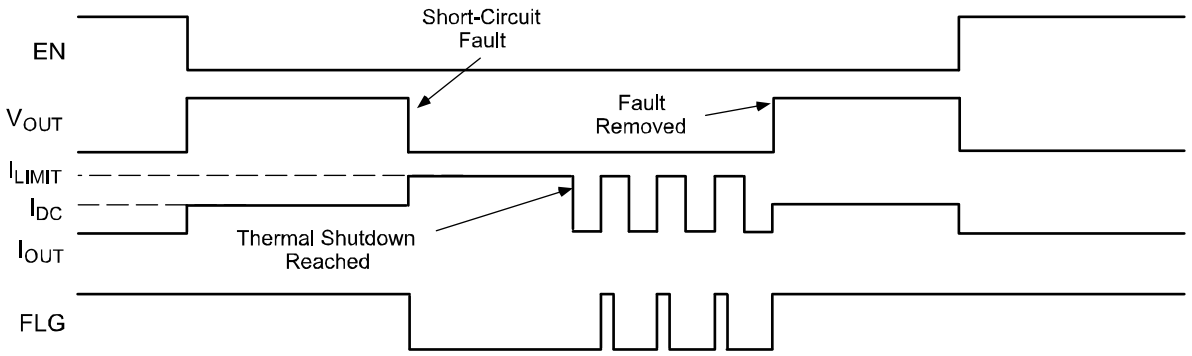

Figure 2b. MIC2546-2 Timing

Block Diagram

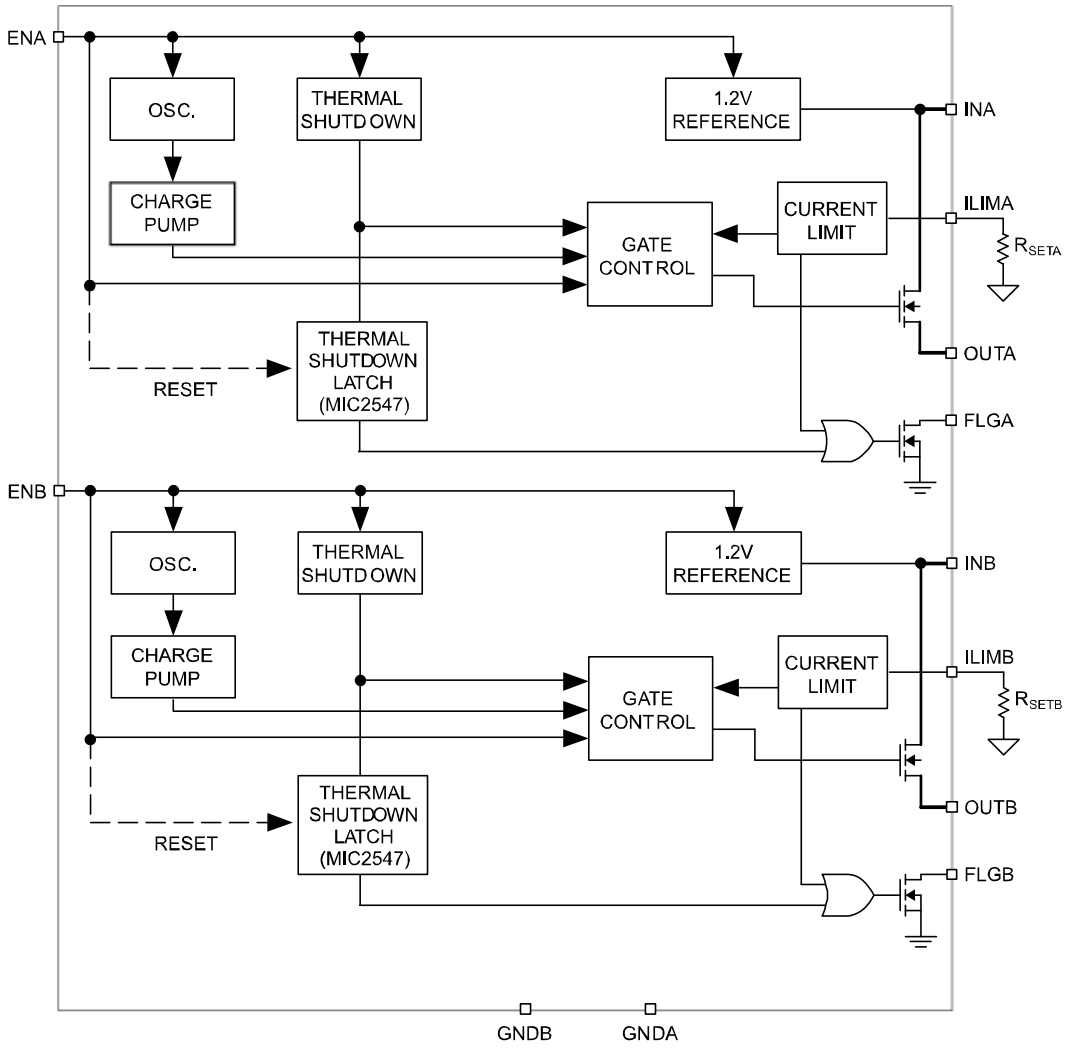

Functional Description

The MIC2546 and MIC2547 are dual high-side N-channel switches available with active-high or active-low enable inputs. Fault conditions turn off or inhibit turn-on of the output transistor and activate the open-drain error flag transistor making it sink current to ground.

Input and Output

INX is the power supply connection to the logic circuitry and the drain of the output MOSFET. OUTX is the source of the output MOSFET. In a typical circuit, current flows from INX to OUTX toward the load. If VOUT is greater than V_{IN}, current will flow from OUTX to INX since the switch is bidirectional when enabled. The output MOSFET and driver circuitry are also designed to allow the MOSFET source to be externally forced to a higher voltage than the drain ($V_{OUT} > V_{IN}$) when the switch is disabled. In this situation, the MIC2546/47 avoids undesirable current flow from OUTX to INX. Both OUT pins for a given channel must be connected together.

Thermal Shutdown

Thermal shutdown shuts off the output MOSFET and signals the fault flag if the die temperature exceeds 140°C. 10°C of hysteresis prevents the switch from turning on until the die temperature drops to 130°C. Overtemperature detection functions only when the switch is enabled.

The MIC2547 features an internal latch which causes the part to remain off after thermal shutdown until a reset pulse is provided via the enable pin. While in current-limit, the thermal shutdown latch prevents on/off cycling of the output. Refer to Figure 2 for timing diagram. The flag remains low until reset.

Enable Input

ENX must be driven logic high or logic low, or be pulled high or low for a clearly defined input. Floating the input may cause unpredictable operation. ENX should not be allowed to go negative with respect to GND, and V_{ENX} should be less than or equal to V_{INX}.

Adjustable Current-Limit

The short-circuit current-limit is user-adjustable with an external set resistor. Current-limit in the range of 100mA to 1.5A is available with a set point accuracy of better than ±20%. The current-limit circuit prevents damage to the output MOSFET and external load.

The nominal current-limit value is set with an external resistor between ILIMX and GND. For a desired current-limit, the value of the external set resistor is given by:

$$R_{SETX} = \left(\frac{230V}{I_{LIMITX}}\right)$$

where:

$154\Omega < R_{SET} < 2.29k\Omega$

For example, to set a 1A nominal current-limit, R_{SET} is calculated as:

$$\left(\frac{230V}{1A}\right) = 230\Omega$$

Current through R_{SETX} increases with OUT current. The voltage across R_{SETX} could be monitored with a high impedance comparator to provide an indication of output current. R_{SETX} should be between 154Ω and 2.29kΩ (0.5% resistor value).

Short-Circuit Protection

In the event of a short-circuit, the output current will fold back to approximately 80% of the short-circuit current-limit.

Fault Flag

FLGX is an N-channel, open-drain MOSFET output. The fault-flag is active (low) for current-limit or thermal shutdown conditions. The flag output MOSFET is capable of sinking a 10mA load to typically 100mV above ground.

Application Information

Supply Filtering

A 0.1µF to 1µF bypass capacitor from INX to GND, located near the MIC2546 and MIC2547, is strongly recommended to control supply transients. Without a bypass capacitor, an output short may cause sufficient ringing on the input (from supply lead inductance) to damage internal control circuitry.

Input transients must not exceed the absolute maximum supply voltage ($V_{IN\ max}$ = 6V) even for a short duration.

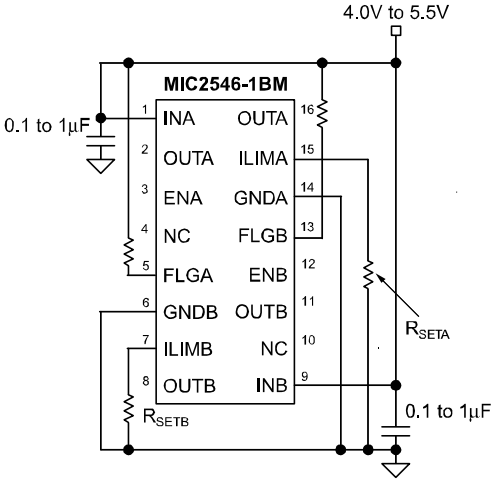

Supply Bypassing

Power Dissipation

The device's junction temperature depends on several factors such as the load, PCB layout, ambient temperature and package type. Equations that can be used to calculate power dissipation and junction temperature are found below.

Calculation of power dissipation can be accomplished by the following equation:

$$P_D = R_{DS(ON)} \times (I_{OUT})^2$$

To relate this to junction temperature, the following equation can be used:

$$T_J = P_D \times \theta_{JA} + T_A$$

where:

T_J = junction temperature

T_A = ambient temperature

θ_{JA} = is the thermal resistance of the package

Transient Overcurrent Filter

The inrush current from the connection of a heavy capacitive load may cause the fault flag to fall for 10µs to 200µs while the switch is in a constant-current mode, charging the capacitance.

Adding an optional series resistor-capacitor (R_{SET2}) in parallel with R_{SET}, as shown in Figure 3, allows the transient current-limit to be set to a different value than steady state. A typical USB hot-plug inrush is 2A to 3A for 10µs to 20µs. If R_{SET} is 435Ω (510mA), an R_{SET2} of 88Ω (2.5A) and C_{SET} of µF (RC = 100µs) allows transient surge of 3A to pass for 100µs without tripping the overcurrent flag (FLG).

USB Power Distribution

The MIC2546 is ideal for meeting USB power distribution requirements. Figure 3 depicts a USB Host application. RSET should be set to a value providing a current-limit >500mA. The accurate current-limit of the MIC2546 will reduce power supply current requirements. Also, fast reaction to short circuit faults prevent voltage droop in mobile PC applications.

Printed Circuit Board Hot-Plug

The MIC2546/47 are ideal inrush current-limiters suitable for hot-plug applications. Due to the integrated charge pump, the MIC2546/47 presents a high impedance when off and slowly becomes a low impedance as it turns on. This “softstart” feature effectively isolates power supplies from highly capacitive loads by reducing inrush current during hot-plug events.

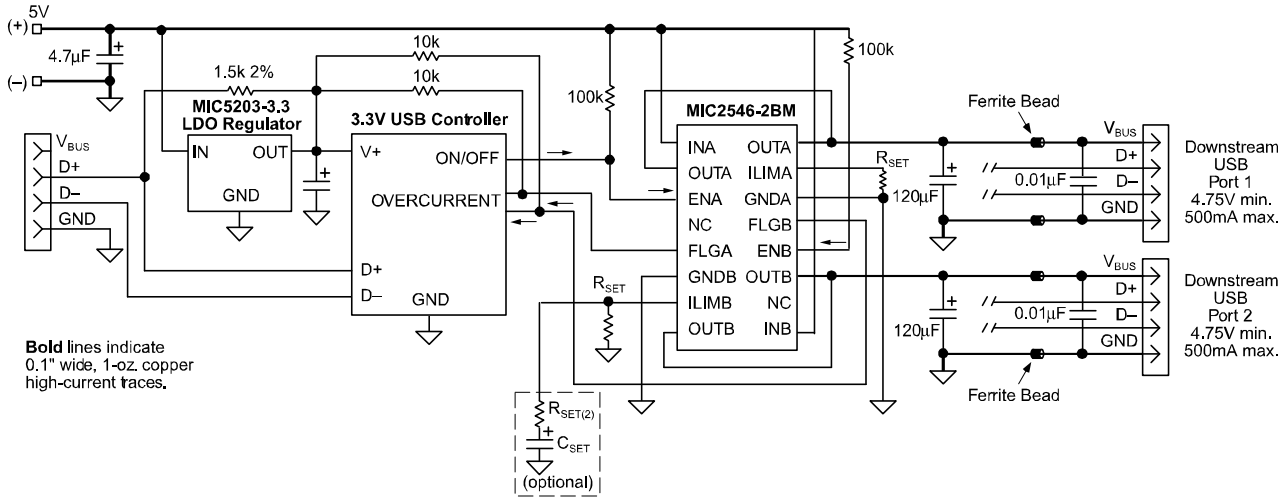

Figure 3. USB Host Application

Package Information

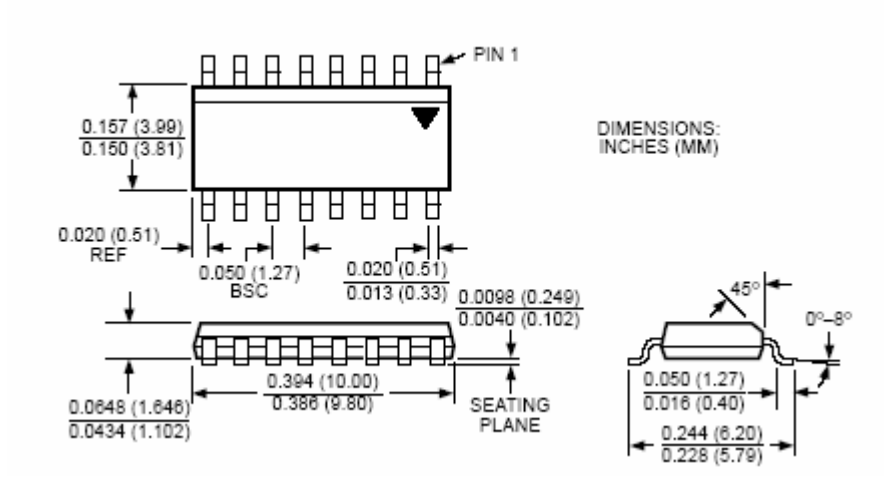

16-Pin SOP (M)

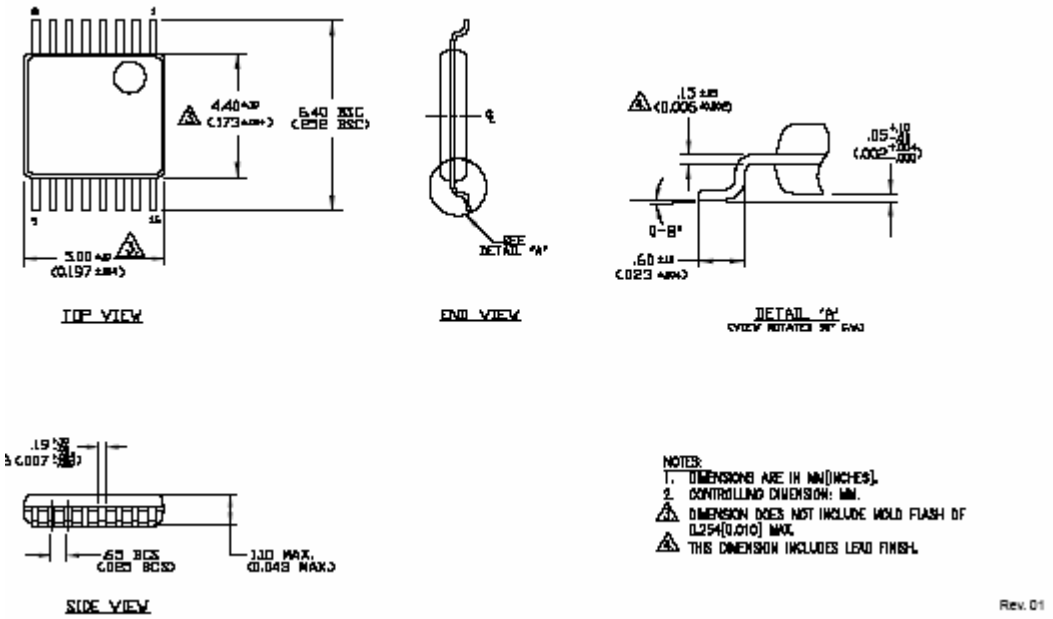

16-Pin TSSOP (TS)

MICREL, INC. 2180 FORTUNE DRIVE SAN JOSE, CA 95131 USA
TEL +1 (408) 944-0800 FAX +1 (408) 474-1000 WEB http://www.micrel.com

The information furnished by Micrel in this data sheet is believed to be accurate and reliable. However, no responsibility is assumed by Micrel for its use. Micrel reserves the right to change circuitry and specifications at any time without notification to the customer.

Micrel Products are not designed or authorized for use as components in life support appliances, devices or systems where malfunction of a product can reasonably be expected to result in personal injury. Life support devices or systems are devices or systems that (a) are intended for surgical implant into the body or (b) support or sustain life, and whose failure to perform can be reasonably expected to result in a significant injury to the user. A Purchaser's use or sale of Micrel Products for use in life support appliances, devices or systems is a Purchaser's own risk and Purchaser agrees to fully indemnify Micrel for any damages resulting from such use or sale.

© 2001 Micrel, Incorporated.

OCEAN CHIPS
Океан Электроники
Поставка электронных компонентов

Компания «Океан Электроники» предлагает заключение долгосрочных отношений при поставках импортных электронных компонентов на взаимовыгодных условиях!

Наши преимущества:

- Поставка оригинальных импортных электронных компонентов напрямую с производств Америки, Европы и Азии, а так же с крупнейших складов мира;
- Широкая линейка поставок активных и пассивных импортных электронных компонентов (более 30 млн. наименований);
- Поставка сложных, дефицитных, либо снятых с производства позиций;
- Оперативные сроки поставки под заказ (от 5 рабочих дней);
- Экспресс доставка в любую точку России;
- Помощь Конструкторского Отдела и консультации квалифицированных инженеров;
- Техническая поддержка проекта, помощь в подборе аналогов, поставка прототипов;
- Поставка электронных компонентов под контролем ВП;
- Система менеджмента качества сертифицирована по Международному стандарту ISO 9001;
- При необходимости вся продукция военного и аэрокосмического назначения проходит испытания и сертификацию в лаборатории (по согласованию с заказчиком);
- Поставка специализированных компонентов военного и аэрокосмического уровня качества (Xilinx, Altera, Analog Devices, Intersil, Interpoint, Microsemi, Actel, Aeroflex, Peregrine, VPT, Syfer, Eurofarad, Texas Instruments, MS Kennedy, Miteq, Cobham, E2V, MA-COM, Hittite, Mini-Circuits, General Dynamics и др.);

Компания «Океан Электроники» является официальным дистрибьютором и эксклюзивным представителем в России одного из крупнейших производителей разъемов военного и аэрокосмического назначения **«JONHON»**, а так же официальным дистрибьютором и эксклюзивным представителем в России производителя высокотехнологичных и надежных решений для передачи СВЧ сигналов **«FORSTAR»**.

AVIC JONHON

«JONHON» (основан в 1970 г.)

Разъемы специального, военного и аэрокосмического назначения:

(Применяются в военной, авиационной, аэрокосмической, морской, железнодорожной, горно- и нефтедобывающей отраслях промышленности)

«FORSTAR» (основан в 1998 г.)

ВЧ соединители, коаксиальные кабели, кабельные сборки и микроволновые компоненты:

(Применяются в телекоммуникациях гражданского и специального назначения, в средствах связи, РЛС, а так же военной, авиационной и аэрокосмической отраслях промышленности).

FORSTAR®

Телефон: 8 (812) 309-75-97 (многоканальный)
Факс: 8 (812) 320-03-32
Электронная почта: ocean@oceanchips.ru
Web: http://oceanchips.ru/
Адрес: 198099, г. Санкт-Петербург, ул. Калинина, д. 2, корп. 4, лит. А