Cermet Trimmers, Surface Mount, 4.0 mm Square, Single Turn, Industrial Grade

FEATURES

- 0.25 W at 70 °C
- Fully sealed to withstand board washing
- Compatible with popular vacuum pick-and-place equipment
- J-hook and gull-wing configurations
- Compliant to RoHS Directive 2002/95/EC

RoHS COMPLIANT

DIMENSIONS in millimeters (inches) ± 0.25 mm (± 0.010")

TS4YJ

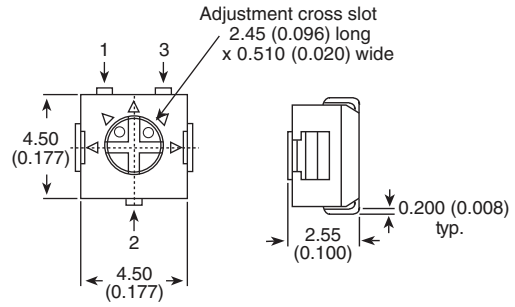

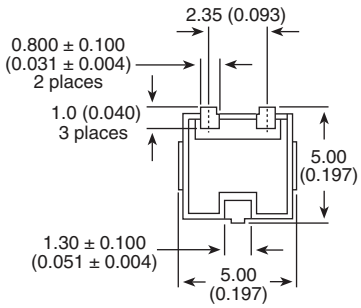

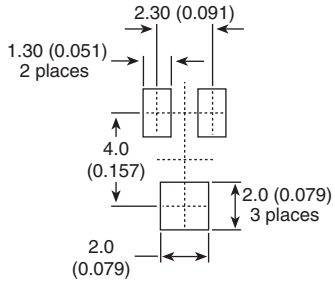

Recommended PCB footprint

TS4YL

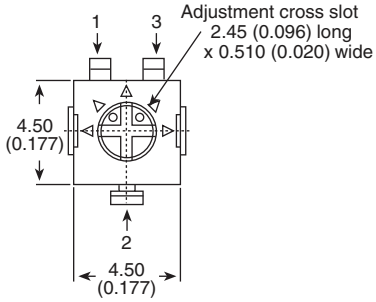

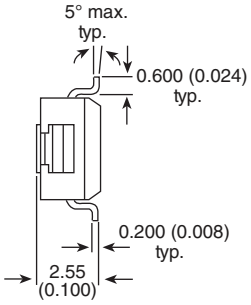

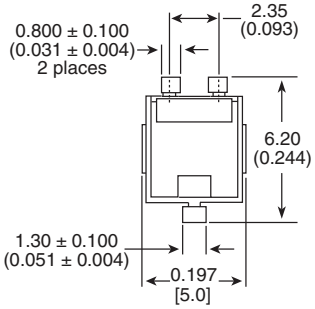

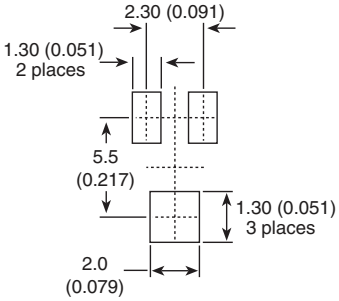

Recommended PCB footprint

ELECTRICAL SPECIFICATIONS

Resistive Range	10 Ω to 2 MΩ (see Standard Resistance table)
Tolerance	± 20 % standard
End Resistance	1 % or 2 Ω maximum, whichever is greater
Temperature Coefficient	± 100 ppm/°C
Power Rating	(300 V maximum) 0.25 W at + 70 °C, 0 W at + 125 °C
Circuit Diagram	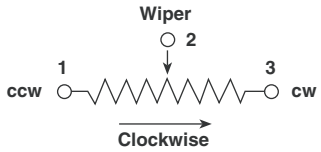
Contact Resistance Variation (CRV)	1 % or 3 Ω
Resolution	Infinite
Insulation Resistance (500 V_{DC})	100 MΩ minimum
Dielectric Strength (RMS)	Sea level 500 V_{AC} (1 minute)
Adjustment Angle	210° nominal

MECHANICAL SPECIFICATIONS	
Mechanical Angle	240° nominal
Operating Torque (Typical)	1.8 Ncm
End Stop Torque (Typical)	3.0 Ncm
Weight	Approximately 0.01 oz.
Wiper	Positioned at approx. 50 %

ENVIRONMENTAL SPECIFICATIONS	
Temperature Range	- 55 °C to + 125 °C
MSL Level	1

PERFORMANCES

TESTS	CONDITIONS	TYPICAL VALUES AND DRIFTS		
		$\Delta R_T/R_T$ (%)	$\Delta V_{1\text{-}2}/V_{1\text{-}3}$ (%)	OTHER
Vibration	20 *g*'s	± 1 %	± 1 %	-
Shock	100 *g*'s	± 1 %	± 1 %	-
Electrical Endurance	At 70 °C rated power 1000 h	± 3 %	-	-
Mechanical Endurance	100 cycles	± 3 %	-	-
Change of Temperature	5 cycles	± 2 %	± 1 %	-
Humidity	90 % to 98 % relative humidity 10 cycles, 240 h	± 2 %	-	Insulation resistance:10 MΩ

SOLDERING RECOMMENDATIONS

Recommended reflow profile 2, see Application Note www.vishay.com/doc?52029

TWO DIGIT DATE CODE

YEAR					
1990	A	2000	M	2010	A
1991	B	2001	N	2011	B
1992	C	2002	P	2012	C
1993	D	2003	R	2013	D
1994	E	2004	S	2014	E
1995	F	2005	T	2015	F
1996	H	2006	U	2016	H
1997	J	2007	V	2017	J
1998	K	2008	W	2018	K
1999	L	2009	X	2019	L

MONTH			
January	1	July	7
February	2	August	8
March	3	September	9
April	4	October	O
May	5	November	N
June	6	December	D

STANDARD RESISTANCE ELEMENT DATA

RESISTANCE Ω	RESISTANCE CODE
10	100
20	200
50	500
100	101
200	201
500	501
1K	102
2K	202
5K	502
10K	103
20K	203
50K	503
100K	104
200K	204
500K	504
1M	105
2M	205

Note

- Special resistance available

PART MARKING

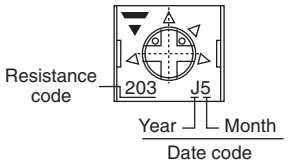

- Manufacturers code
- Resistance code
- Date code

PACKAGING in millimeters (inches)

TS4YJ, TS4YL
Tape

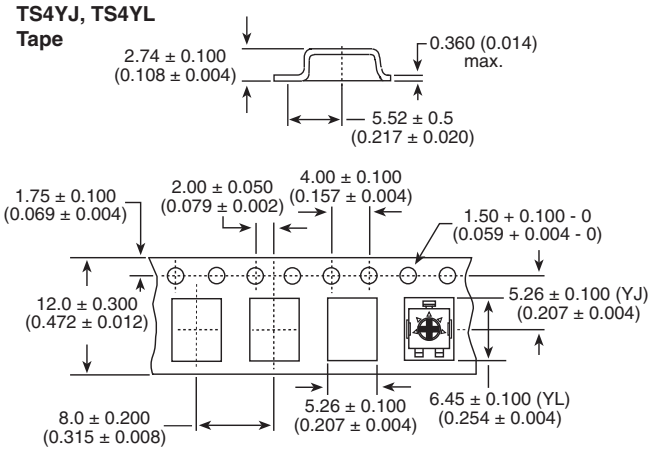

TS4YJ, TS4YL
Reel

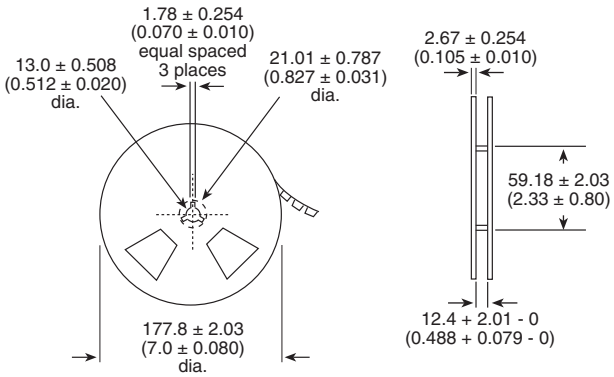

500 pieces per 7" reel standard. Meets EIA Specifications 481.

ORDERING INFORMATION (Part Number)

T	S	4	Y	L	5	0	2	M	R	1	0				

MODEL	STYLE	OHMIC VALUE	TOLERANCE	PACKAGING	SPECIAL NUMBER
TS4	**YJ** **YL**	From 10 Ω to 2 MΩ **502** = 5 kΩ	**M** = ± 20 %	**R10** = Reel 500 pieces	(If applicable) Given by Vishay for custom design

DESCRIPTION (for information only)

TS4	YL	5K	20 %		TR	e3
MODEL	STYLE	VALUE	TOLERANCE	SPECIAL	PACKAGING	LEAD FINISH

Disclaimer

ALL PRODUCT, PRODUCT SPECIFICATIONS AND DATA ARE SUBJECT TO CHANGE WITHOUT NOTICE TO IMPROVE RELIABILITY, FUNCTION OR DESIGN OR OTHERWISE.

Vishay Intertechnology, Inc., its affiliates, agents, and employees, and all persons acting on its or their behalf (collectively, "Vishay"), disclaim any and all liability for any errors, inaccuracies or incompleteness contained in any datasheet or in any other disclosure relating to any product.

Vishay makes no warranty, representation or guarantee regarding the suitability of the products for any particular purpose or the continuing production of any product. To the maximum extent permitted by applicable law, Vishay disclaims (i) any and all liability arising out of the application or use of any product, (ii) any and all liability, including without limitation special, consequential or incidental damages, and (iii) any and all implied warranties, including warranties of fitness for particular purpose, non-infringement and merchantability.

Statements regarding the suitability of products for certain types of applications are based on Vishay's knowledge of typical requirements that are often placed on Vishay products in generic applications. Such statements are not binding statements about the suitability of products for a particular application. It is the customer's responsibility to validate that a particular product with the properties described in the product specification is suitable for use in a particular application. Parameters provided in datasheets and/or specifications may vary in different applications and performance may vary over time. All operating parameters, including typical parameters, must be validated for each customer application by the customer's technical experts. Product specifications do not expand or otherwise modify Vishay's terms and conditions of purchase, including but not limited to the warranty expressed therein.

Except as expressly indicated in writing, Vishay products are not designed for use in medical, life-saving, or life-sustaining applications or for any other application in which the failure of the Vishay product could result in personal injury or death. Customers using or selling Vishay products not expressly indicated for use in such applications do so at their own risk. Please contact authorized Vishay personnel to obtain written terms and conditions regarding products designed for such applications.

No license, express or implied, by estoppel or otherwise, to any intellectual property rights is granted by this document or by any conduct of Vishay. Product names and markings noted herein may be trademarks of their respective owners.

Material Category Policy

Vishay Intertechnology, Inc. hereby certifies that all its products that are identified as RoHS-Compliant fulfill the definitions and restrictions defined under Directive 2011/65/EU of The European Parliament and of the Council of June 8, 2011 on the restriction of the use of certain hazardous substances in electrical and electronic equipment (EEE) - recast, unless otherwise specified as non-compliant.

Please note that some Vishay documentation may still make reference to RoHS Directive 2002/95/EC. We confirm that all the products identified as being compliant to Directive 2002/95/EC conform to Directive 2011/65/EU.

Vishay Intertechnology, Inc. hereby certifies that all its products that are identified as Halogen-Free follow Halogen-Free requirements as per JEDEC JS709A standards. Please note that some Vishay documentation may still make reference to the IEC 61249-2-21 definition. We confirm that all the products identified as being compliant to IEC 61249-2-21 conform to JEDEC JS709A standards.

OCEAN CHIPS
Океан Электроники
Поставка электронных компонентов

Компания «Океан Электроники» предлагает заключение долгосрочных отношений при поставках импортных электронных компонентов на взаимовыгодных условиях!

Наши преимущества:

- Поставка оригинальных импортных электронных компонентов напрямую с производств Америки, Европы и Азии, а так же с крупнейших складов мира;
- Широкая линейка поставок активных и пассивных импортных электронных компонентов (более 30 млн. наименований);
- Поставка сложных, дефицитных, либо снятых с производства позиций;
- Оперативные сроки поставки под заказ (от 5 рабочих дней);
- Экспресс доставка в любую точку России;
- Помощь Конструкторского Отдела и консультации квалифицированных инженеров;
- Техническая поддержка проекта, помощь в подборе аналогов, поставка прототипов;
- Поставка электронных компонентов под контролем ВП;
- Система менеджмента качества сертифицирована по Международному стандарту ISO 9001;
- При необходимости вся продукция военного и аэрокосмического назначения проходит испытания и сертификацию в лаборатории (по согласованию с заказчиком);
- Поставка специализированных компонентов военного и аэрокосмического уровня качества (Xilinx, Altera, Analog Devices, Intersil, Interpoint, Microsemi, Actel, Aeroflex, Peregrine, VPT, Syfer, Eurofarad, Texas Instruments, MS Kennedy, Miteq, Cobham, E2V, MA-COM, Hittite, Mini-Circuits, General Dynamics и др.);

Компания «Океан Электроники» является официальным дистрибьютором и эксклюзивным представителем в России одного из крупнейших производителей разъемов военного и аэрокосмического назначения **«JONHON»**, а так же официальным дистрибьютором и эксклюзивным представителем в России производителя высокотехнологичных и надежных решений для передачи СВЧ сигналов **«FORSTAR»**.

AVIC JONHON

«JONHON» (основан в 1970 г.)

Разъемы специального, военного и аэрокосмического назначения:

(Применяются в военной, авиационной, аэрокосмической, морской, железнодорожной, горно- и нефтедобывающей отраслях промышленности)

«FORSTAR» (основан в 1998 г.)

ВЧ соединители, коаксиальные кабели, кабельные сборки и микроволновые компоненты:

(Применяются в телекоммуникациях гражданского и специального назначения, в средствах связи, РЛС, а так же военной, авиационной и аэрокосмической отраслях промышленности).

FORSTAR®

Телефон: 8 (812) 309-75-97 (многоканальный)
Факс: 8 (812) 320-03-32
Электронная почта: ocean@oceanchips.ru
Web: http://oceanchips.ru/
Адрес: 198099, г. Санкт-Петербург, ул. Калинина, д. 2, корп. 4, лит. А