MIC2537

Quad Power Distribution Switch

Final Information

The Infinite Bandwidth Company™

General Description

The MIC2537 is a cost-effective high-side power switch with four independently controlled channels, optimized for bus-powered Universal Serial Bus (USB) applications. Few external components are necessary to satisfy USB requirements.

The MIC2537 satisfies the following USB requirements: each switch channel supplies up to 100mA as required by USB bus-powered downstream devices; fault current is limited to typically 250mA, well below the UL 25VA safety requirements; and a flag output is available to indicate fault conditions to the local USB controller. Soft start eliminates the momentary voltage drop on the upstream port that may occur when the switch is enabled in bus-powered applications.

Additional features include thermal shutdown to prevent catastrophic switch failure from high-current loads and 3.3V and 5V logic compatible enable inputs.

The MIC2537 is available in active-high and active-low versions in a 16-lead SOP package.

Features

- Compliant to USB specifications
- 3V to 5.5V input
- 100mA minimum continuous load current per port
- 425mΩ typical on-resistance
- < 400mA current limit
- Individual open-drain fault flag leads
- 3V/5V-compatible enable inputs
- Active-high (-1) and active-low (-2) versions
- 100µA max. on-state supply current
- <1µA typical off-state supply current
- 16-lead SOP package
- –40°C to 85°C operation

Applications

- USB keyboards
- USB bus-powered docking stations
- Notebook docking stations
- Notebook PCs
- PDA
- General power distribution

Typical Application

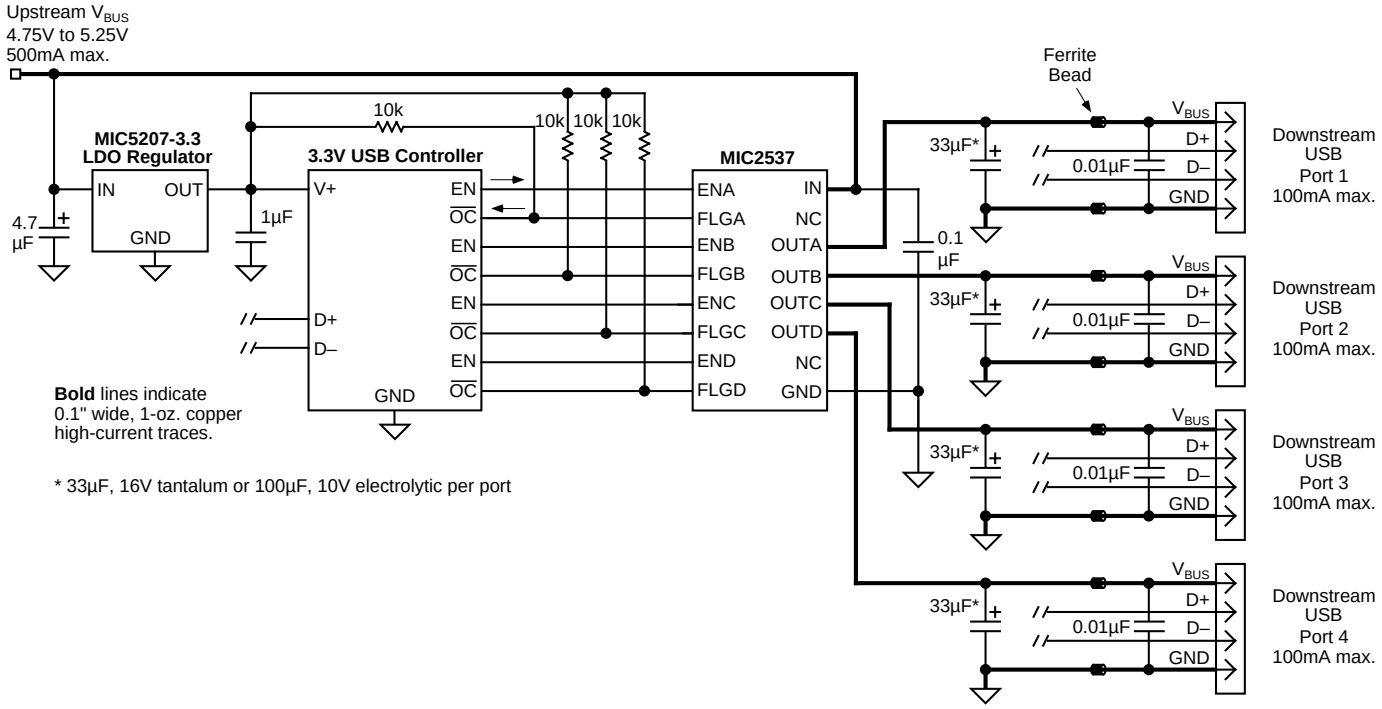

Typical Bus-Powered Hub

UL Recognized Component

Micrel, Inc. • 1849 Fortune Drive • San Jose, CA 95131 • USA • tel + 1 (408) 944-0800 • fax + 1 (408) 944-0970 • http://www.micrel.com

Ordering Information

Part Number	Enable	Temperature Range	Package
MIC2537-1BM	Active High	–40°C to +85°C	16-Lead SOP
MIC2537-2BM	Active Low	–40°C to +85°C	16-Lead SOP

Pin Configuration

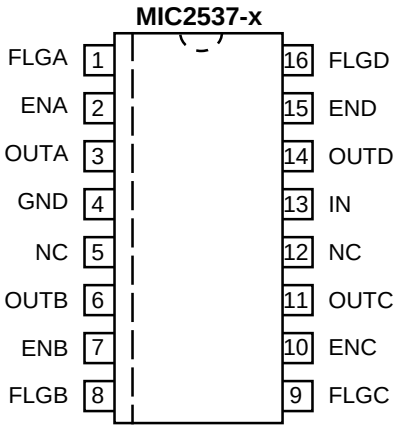

16-Lead SOP (M)

Pin Description

Pin Number	Pin Name	Pin Function
1	FLGA	Flag A: (Output): Channel A open-drain fault flag output.
2	ENA	Enable A (Input): Channel A control input.
3	OUTA	Output A: Channel A switch output.
4	GND	Ground: Supply return. Connect both leads to ground.
5, 12	NC	Not internally connected
6	OUTB	Output B: Channel B switch output.
7	ENB	Enable B (Input): Channel B control input.
8	FLGB	Flag B (Output): Channel B open-drain fault flag output.
9	FLGC	Flag C (Output): Channel C open-drain fault flag output.
10	ENC	Enable C (Input): Channel C control input.
11	OUTC	Output C: Channel C switch output.
13	IN	Positive Supply Input
14	OUTD	Output D: Channel D switch output.
15	END	Enable D (Input): Channel D control input.
16	FLGD	Flag D (Output): Channel D open-drain fault flag output.

Absolute Maximum Ratings (Note 1)

Supply Voltage (V_{IN}) ..... +6V
Fault Flag Voltage (V_{FLG}) ..... +6V
Fault Flag Current (I_{FLG}) 25mA
Output Voltage (V_{OUT}) ..... +6V
Output Current (I_{OUT}) ..... Internally Limited
Control Input (V_{EN}) ..... –0.3V to 12V
Storage Temperature (T_S) ..... –65°C to +150°C
Lead Temperature (Soldering 5 sec.) ..... 260°C
ESD Rating, Note 3 ..... 2kV

Operating Ratings (Note 2)

Supply Voltage (V_{IN}) ..... +3V to +5.5V
Ambient Operating Temperature (T_A) ..... –40°C to +85°C
Thermal Resistance
SOP (θ_{JA}) ..... 120°C/W

Electrical Characteristics

V_{IN} = +5V; T_A = 25°C; unless noted.

Parameter	Condition	Min	Typ	Max	Units
Supply Current	**Note 4**, switch off, OUTA–D = open		0.75	5	µA
	Note 4, all switches on, OUTA–D = open		70	100	µA
Enable Input Threshold	low-to-high transition		1.8	2.4	V
	high-to-low transition, **Note 4**	0.8	1.6		V
Enable Input Current	$V_{EN} = V_{OH(min)}$ = 2.4V		0.01	1	µA
	$V_{EN} = V_{OL(max)}$ = 0.8V		0.01	1	µA
Enable Input Capacitance			1		pF
Switch Resistance	single switch, 100mA load		425	700	mΩ
Output Turn-On Delay	R_L = 50Ω, C_L = 1µF, **Note 5**		0.51		ms
Output Turn-On Rise Time	R_L = 50Ω, C_L = 1µF, **Note 5**	0.2	0.5		ms
Output Turnoff Delay	R_L = 50Ω, C_L = 1µF, **Note 5**		150	300	µs
Output Turnoff Fall Time	R_L = 50Ω, C_L = 1µF, **Note 5**		148	300	µs
Output Leakage Current	each output (switch off)		1	10	µA
Current Limit Threshold	ramped load applied to enable output, **Note 6**		300	500	mA
Continuous Load Current	each output, FLG not active	100			mA
Short Circuit Current Limit	each output (enabled into load), V_{OUT} = 4.0V	150	250	400	mA
Overtemperature Shutdown	T_J increasing		135		°C
Threshold	T_J decreasing		125		°C
Error Flag Output Resistance	V_{IN} = 5V, I_L = 10mA		10		Ω
	V_{IN} = 3.3V, I_L = 10mA		12		Ω
Error Flag Off Current	V_{FLAG} = 5V		0.01	1	µA

Note 1. Exceeding the absolute maximum rating may damage the device.

Note 2. The device is not guaranteed to function outside its operating rating.

Note 3. Devices are ESD sensitive. Handling precautions recommended. Human body model, 1.5kΩ in series with 100pF.

Note 4. Off is ≤ 0.8V and on is ≥ 2.4V for the MIC2537-1. Off is ≥ 2.4V and on is ≤ 0.8V for the MIC2537-2. The enable input has approximately 200mV of hysteresis. See control threshold charts.

Note 5. See “Timing Diagrams.”

Note 6. See “Functional Characteristics: Current-Limit Response” graph.

Typical Characteristics

Supply Current vs. Supply Voltage

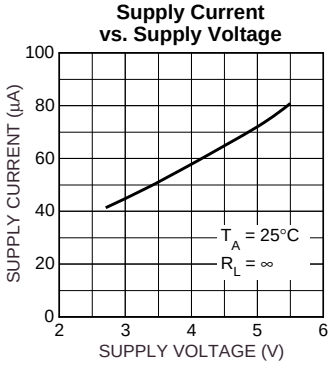

Supply Current vs. Temperature

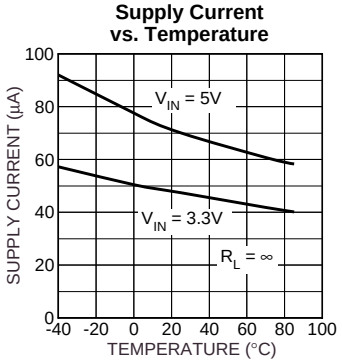

Ouput On-Resistance Variation vs. Supply Voltage

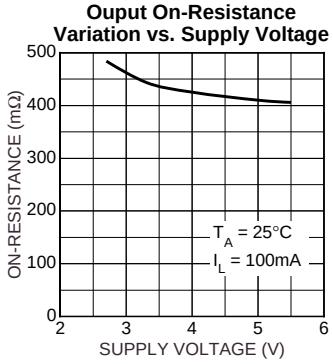

Output On-Resistance Variation vs. Temperature

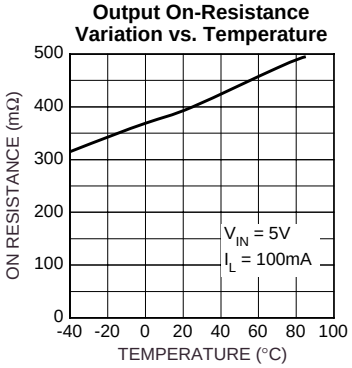

Overcurrent Threshold and Current Limit vs. Supply Voltage

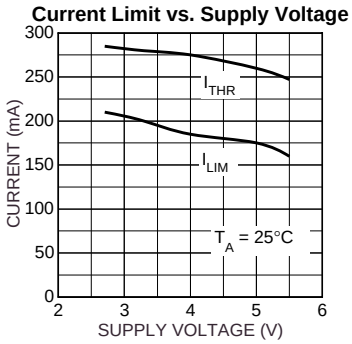

Overcurrent Threshold and Current Limit vs. Temperature

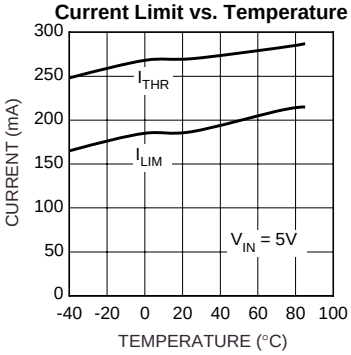

Control Threshold vs. Supply Voltage

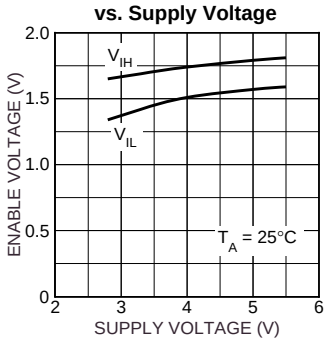

Control Threshold vs. Temperature

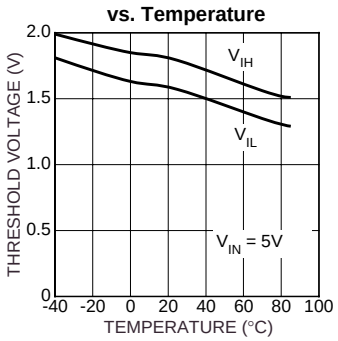

Output Rise Time vs. Temperature

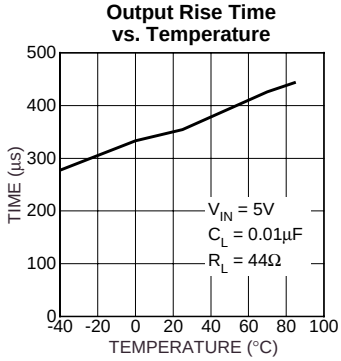

Output Fall Time vs. Temperature

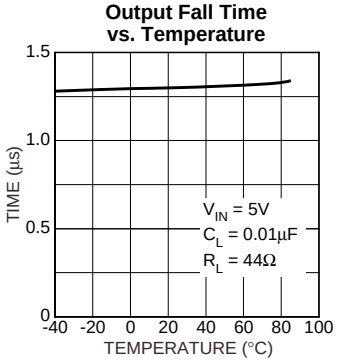

Functional Characteristics

Input Voltage Response
(Input Voltage Rising: MIC2537-2)

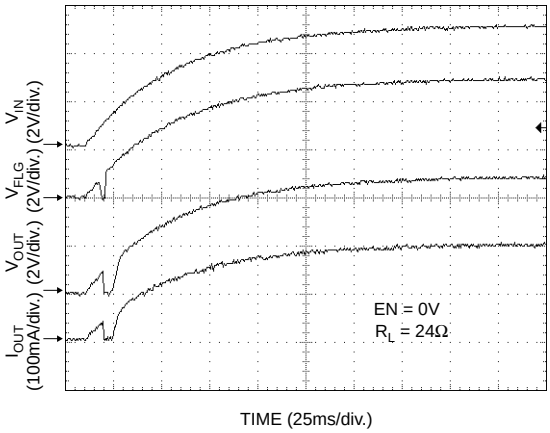

Input Voltage Response
(Input Voltage Decreasing: MIC2537-2)

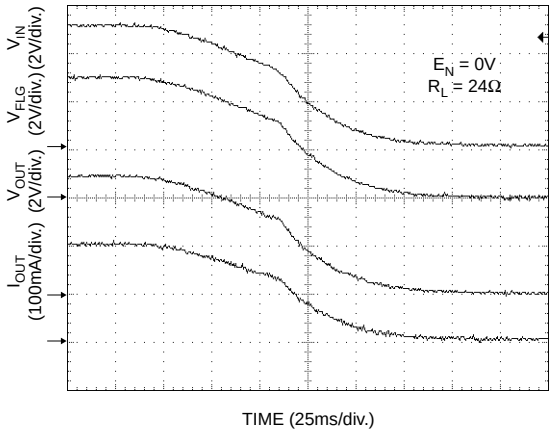

Current Limit Transient Response
(Heavy Load Applied to Output: MIC2537-2)

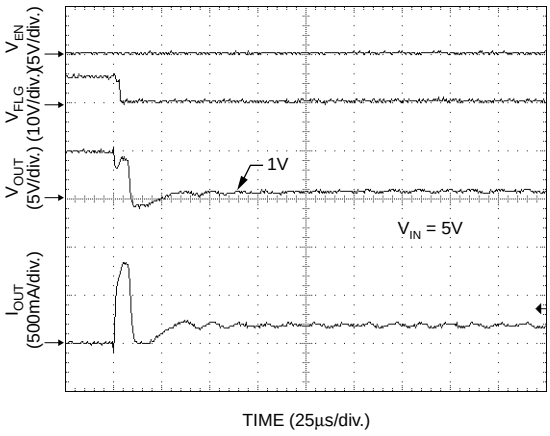

Current Limit Response
(Ramped Load: MIC2537-2)

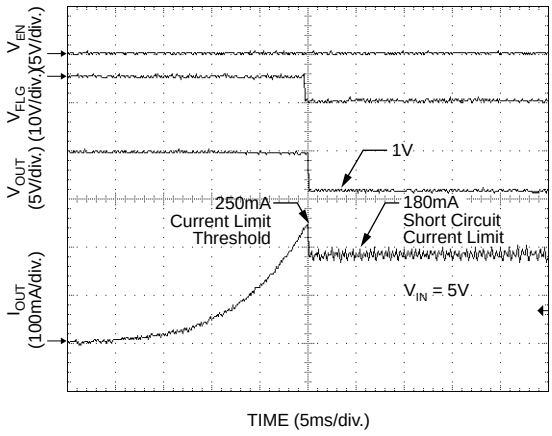

Test Circuit

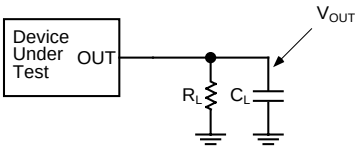

Timing Diagrams

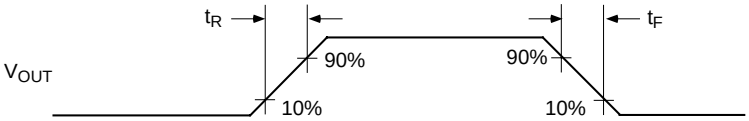

Output Rise and Fall Times

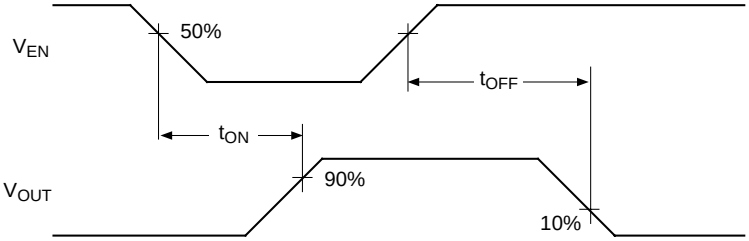

Active-Low Switch Delay Times (MIC2537-2)

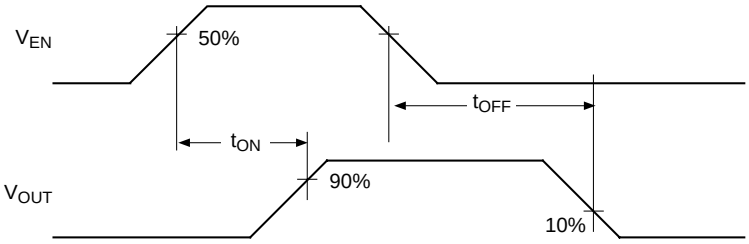

Active-Low Switch Delay Times (MIC2537-1)

Functional Diagram

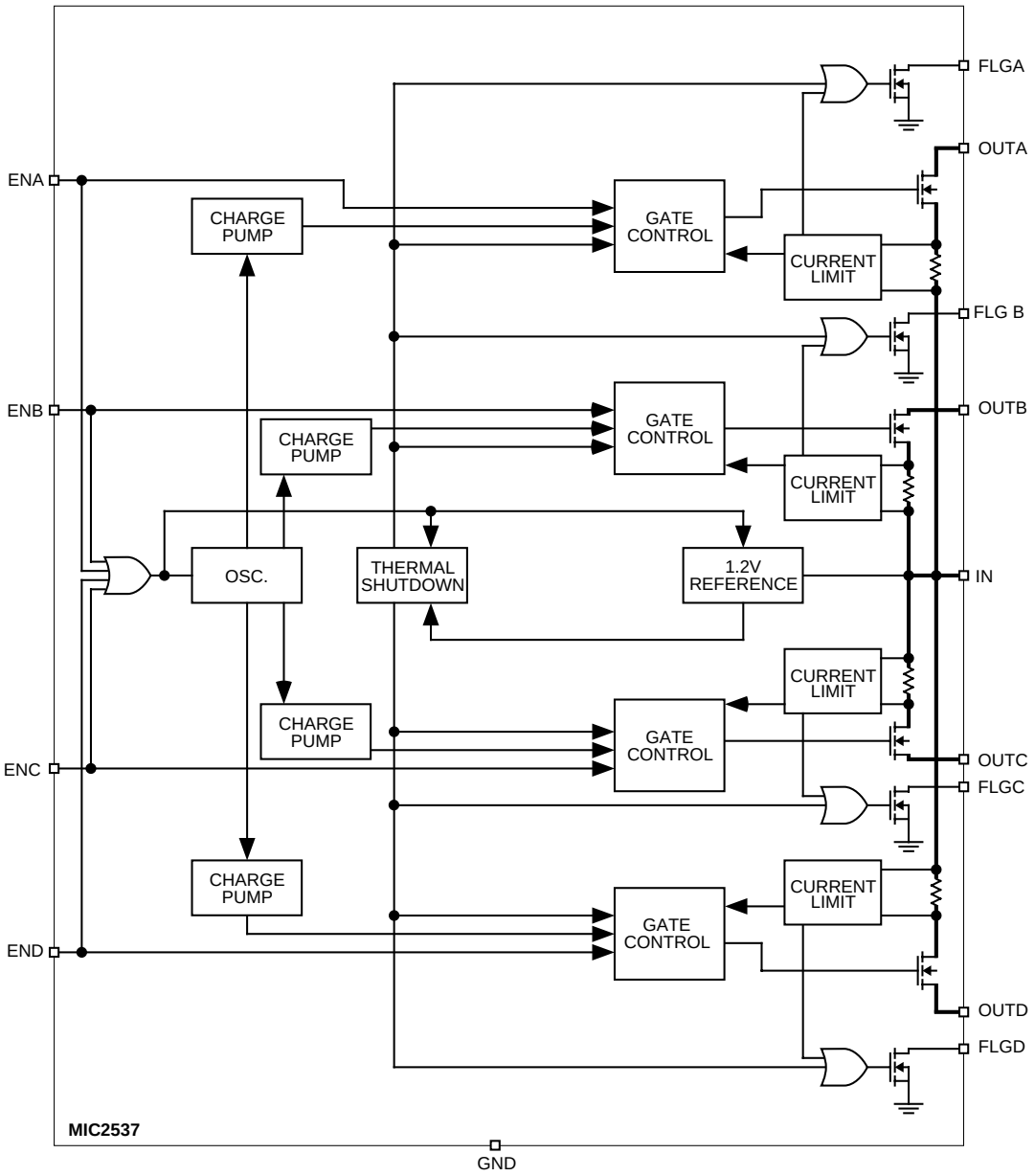

Functional Description

The MIC2537-1 and MIC2537-2 are quad high-side switches with active-high and active-low enable inputs, respectively. Fault conditions turn off or inhibit turn-on of one or more of the output transistors, depending upon the type of fault, and activate the open-drain error flag transistors making them sink current to ground.

Input and Output

IN (input) is the power supply connection to the logic circuitry and the drain of each output MOSFET. OUTx (output) is the source of each respective MOSFET. In a typical circuit, current flows through the switch from IN to OUTx toward the load. If V_{OUT} is greater than V_{IN}, current will flow from OUT to IN since the MOSFET is bidirectional when on.

The output MOSFET and driver circuitry are also designed to allow the MOSFET source to be externally forced to a higher voltage than the drain ($V_{OUTx} > V_{IN}$) when the output is off. In this situation, the MIC2537 prevents reverse current flow.

Thermal Shutdown

Thermal shutdown shuts off the affected output MOSFET and signals the corresponding fault flags if the die temperature exceeds 135°C. 10°C of hysteresis prevents the switch from turning on until the die temperature drops to 125°C. Overtemperature detection functions only when at least one switch is enabled.

Current-Limit Induced Thermal Shutdown

Internal circuitry increases the output MOSFET on-resistance until the series combination of the MOSFET on-resistance and the load impedance limits output current to approximately 200mA. The resulting increase in power dissipation may cause the shorted channel to go into thermal shutdown. In addition, even though individual channels are thermally isolated, it is possible they may shut down when an adjacent channel is shorted. When this is undesirable, shutdown of the channels not shorted can be avoided by externally responding to the fault and disabling the current limited channel before the shutdown temperature is reached. The delay between the flag indication of a current limit fault and thermal shutdown will vary with ambient temperature, board layout, and load impedance, but is typically several seconds. The USB controller must therefore recognize a fault and disable the appropriate channel within this time.

Current Sensing and Limiting

The current-limit threshold is preset internally. The preset level prevents damage to the output MOSFET and external load but allows a minimum current of 0.15A through the output MOSFET of each channel.

The current-limit circuit senses a portion of the output FET switch current. The current sense resistor shown in the block diagram is virtual and has no voltage drop. The reaction to an overcurrent condition varies with the following three scenarios:

Switch Enabled into Short Circuit

If a switch is powered on or enabled into an excessive load or short circuit, the switch immediately goes into a constant-current mode, slowly increasing the output voltage. The fault flag goes low until the load is reduced.

Short Circuit Applied to Output

When a heavy load or short circuit is applied to an enabled switch, a large transient current may flow until the current-limit circuitry responds. Once this occurs, the device limits current to less than the short circuit current-limit specification. See the “Functional Characteristics: Current-Limit Transient Response graph for details.

Current-Limit Response

The MIC2537 current-limit profile exhibits a small foldback effect of approximately 100mA. Once this current-limit threshold is exceeded the device enters constant-current mode. This constant current is specified as the short-circuit current limit in the “Electrical Characteristics” table. It is important to note that the MIC2537 will deliver load current up to the current-limit threshold. See the “Functional Characteristics: Current-Limit Response” graph for details.

Fault Flag

FLGx is an open-drain N-channel MOSFET output. Fault flags are active (low) for current limit or thermal shutdown. Each flag output MOSFET is capable of sinking a 10mA load to approximately 200mV above ground. Several FLGx pins may be wired-NOR connected to a common pull-up resistor.

Applications Information

Supply Filtering

A 0.1µF to 1µF bypass capacitor from IN to GND, located at the device, is strongly recommended to control supply transients. Without a bypass capacitor, an output short may cause sufficient ringing on the input (from supply lead inductance) to damage internal control circuitry.

Input or output transients must not exceed the absolute maximum supply voltage ($V_{IN(max)}$ = 6V) even for a short duration.

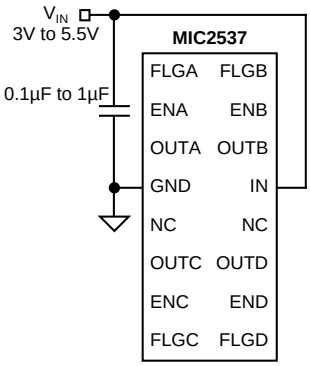

Figure 1. Supply Bypassing

Enable Input

EN must be driven logic high or logic low for a clearly defined input. Floating the input may cause unpredictable operation. EN should not be allowed to go negative with respect to GND.

Soft Start

The MIC2537 presents a high impedance when off and slowly becomes a low impedance as it turns on. This reduces inrush current and related voltage drop that results from charging a capacitive load, satisfying the USB voltage droop requirements.

Transient Overcurrent Fault-Flag Filter

When the MIC2537 is enabled, large values of capacitance at the output of the device will cause inrush currents to flow that exceed the short circuit current-limit threshold of the device and cause the flag to activate. The duration of this time depends on the size of the output capacitance. See "Functional Characteristics: Switch Turn-On and Turnoff Charcteristics" for details. During the charging time, the device enters into constant-current mode and the flag is activated. As the capacitance is charged the current decreases below the short circuit current-limit threshold and the flag will be deasserted.

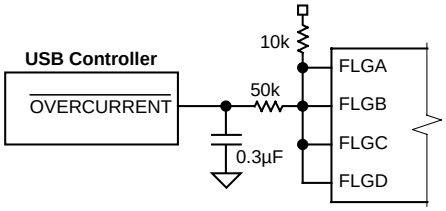

Figure 2. Transient Filter

In USB applications it is required that output bulk capacitance shown in "Typical Application" is utilized to meet transient regulation requirements during hot-plug events. When the MIC2537 is enabled, the flag will go active for about 5ms depending on output capacitance. Additionally, during hot-plug events, inrush currents may cause the flag to go active for approximately 30µs. If these "false" overcurrent indications are a system problem, they can be masked by an RC filter on the flag output (see Figure 2). Alternatively, a 15ms debounce routine may be programmed into the USB logic controller to eliminate the need for an RC filter.

Bus-Powered Hub Port Switching

The USB Specification requires that bus-powered hubs implement port switching on either a ganged or individual basis. The specific implementation must be reported via the Hub Descriptor Status Register. Individual port switching has advantages in that a fault on one port will not prevent the other ports from operating correctly. In addition, a soft-start circuit must be included in order to reduce inrush currents when the switch is enabled. To meet this requirement, the MIC2537 has been designed to slowly ramp its output.

Suspend Current

For hubs, *Universal Serial Bus Specification Revision 1.1* section 7.2.3, stipulates that the maximum suspend current for a configured hub is 2.5mA. This number is derived by allocating 500µA for up to four downstream ports plus 500µA for the hub's internal functions. A nonconfigured hub is considered a low-power device and cannot consume more than 500µA. In a nonconfigured state all downstream devices will be switched off. In most cases, a nonconfigured hub is not a practical state for the system. Therefore, the 2.5mA specification is the applicable target specification for the suspend state. In a bus-powered hub with less than 4 ports, the hub may use the additional current for internal functions.

The 500µA worst case suspend current must be further divided among the data port termination resistors and internal functions. The termination resistors will consume 3.6V ÷ (16.5KΩ – 5%) = 230µA. This leaves only 270µA for internal functions. Assuming 100µA as the maximum USB controller suspend current, 170µA remains for the rest of the system. The MIC2537 will consume 100µA maximum, leaving a margin of 70µA.

USB Voltage Regulation

USB specifications require a minimum downstream voltage supply of 4.40V from a bus-powered hub port (See *Application Note 17* for details). The USB specification allows for a 100mV drop across the hub, leaving 250mV for PCB, upstream cable, and connector resistance. Therefore, the on-resistance of the switch for each port, not including PCB resistance, must be about 100mV ÷ 100mA = 1Ω. The MIC2537 has a maximum on-resistance of 700mΩ, which easily satisfies this requirement.

Overcurrent Indication

The USB Specification does not require bus-powered hubs to report overcurrent conditions to the host since the hub is already current-limited at the upstream port. However, if it is desired to report overcurrent, the Hub Descriptor Status Register must be programmed to indicate this. The MIC2537 provides a flag output for this application.

Package Information

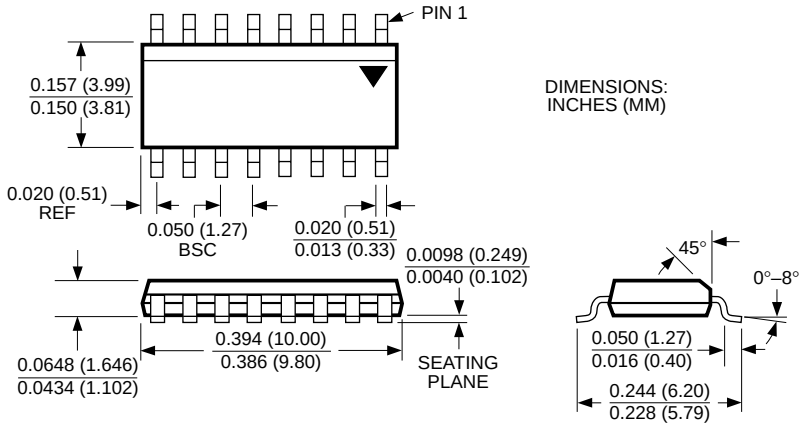

16-Lead SOP (M)

MICREL INC. 1849 FORTUNE DRIVE SAN JOSE, CA 95131 USA

TEL + 1 (408) 944-0800 FAX + 1 (408) 944-0970 WEB http://www.micrel.com

This information is believed to be accurate and reliable, however no responsibility is assumed by Micrel for its use nor for any infringement of patents or other rights of third parties resulting from its use. No license is granted by implication or otherwise under any patent or patent right of Micrel Inc.

© 1999 Micrel Incorporated

OCEAN CHIPS
Океан Электроники
Поставка электронных компонентов

Компания «Океан Электроники» предлагает заключение долгосрочных отношений при поставках импортных электронных компонентов на взаимовыгодных условиях!

Наши преимущества:

- Поставка оригинальных импортных электронных компонентов напрямую с производств Америки, Европы и Азии, а так же с крупнейших складов мира;
- Широкая линейка поставок активных и пассивных импортных электронных компонентов (более 30 млн. наименований);
- Поставка сложных, дефицитных, либо снятых с производства позиций;
- Оперативные сроки поставки под заказ (от 5 рабочих дней);
- Экспресс доставка в любую точку России;
- Помощь Конструкторского Отдела и консультации квалифицированных инженеров;
- Техническая поддержка проекта, помощь в подборе аналогов, поставка прототипов;
- Поставка электронных компонентов под контролем ВП;
- Система менеджмента качества сертифицирована по Международному стандарту ISO 9001;
- При необходимости вся продукция военного и аэрокосмического назначения проходит испытания и сертификацию в лаборатории (по согласованию с заказчиком);
- Поставка специализированных компонентов военного и аэрокосмического уровня качества (Xilinx, Altera, Analog Devices, Intersil, Interpoint, Microsemi, Actel, Aeroflex, Peregrine, VPT, Syfer, Eurofarad, Texas Instruments, MS Kennedy, Miteq, Cobham, E2V, MA-COM, Hittite, Mini-Circuits, General Dynamics и др.);

Компания «Океан Электроники» является официальным дистрибьютором и эксклюзивным представителем в России одного из крупнейших производителей разъемов военного и аэрокосмического назначения **«JONHON»**, а так же официальным дистрибьютором и эксклюзивным представителем в России производителя высокотехнологичных и надежных решений для передачи СВЧ сигналов **«FORSTAR»**.

AVIC JONHON

«JONHON» (основан в 1970 г.)

Разъемы специального, военного и аэрокосмического назначения:

(Применяются в военной, авиационной, аэрокосмической, морской, железнодорожной, горно- и нефтедобывающей отраслях промышленности)

«FORSTAR» (основан в 1998 г.)

ВЧ соединители, коаксиальные кабели, кабельные сборки и микроволновые компоненты:

(Применяются в телекоммуникациях гражданского и специального назначения, в средствах связи, РЛС, а так же военной, авиационной и аэрокосмической отраслях промышленности).

FORSTAR®

Телефон: 8 (812) 309-75-97 (многоканальный)
Факс: 8 (812) 320-03-32
Электронная почта: ocean@oceanchips.ru
Web: http://oceanchips.ru/
Адрес: 198099, г. Санкт-Петербург, ул. Калинина, д. 2, корп. 4, лит. А