dsPIC33CH128MP508 FAMILY

28/36/48/64/80-Pin Dual Core, 16-Bit Digital Signal Controllers with High-Resolution PWM and CAN Flexible Data (CAN FD)

Operating Conditions

- 3V to 3.6V, -40°C to +125°C:
  - Master Core: DC to 90 MIPS
  - Slave Core: DC to 100 MIPS

Core: Dual 16-Bit dsPIC33CH CPU

- Master/Slave Core Operation
- Independent Peripherals for Master Core and Slave Core
- Dual Partition for Slave PRAM LiveUpdate
- Configurable Shared Resources for Master Core and Slave Core
- Master Core with 64-128 Kbytes of Program Flash with ECC and 16K RAM
- Slave Core with 24 Kbytes of Program RAM (PRAM) with ECC and 4K Data Memory RAM
- Fast 6-Cycle Divide
- Message Boxes and FIFO to Communicate Between Master and Slave (MSI)
- Code Efficient (C and Assembly) Architecture
- 40-Bit Wide Accumulators
- Single-Cycle (MAC/MPY) with Dual Data Fetch
- Single-Cycle, Mixed-Sign MUL Plus Hardware Divide
- 32-Bit Multiply Support
- Five Sets of Interrupt Context Selected Registers and Accumulators per Core for Fast Interrupt Response
- Zero Overhead Looping

Clock Management

- Internal Oscillator
- Programmable PLLs and Oscillator Clock Sources
- Master Reference Clock Output
- Slave Reference Clock Output
- Fail-Safe Clock Monitor (FSCM)
- Fast Wake-up and Start-up
- Backup Internal Oscillator
- LPRC Oscillator

Power Management

- Low-Power Management Modes (Sleep, Idle, Doze)
- Integrated Power-on Reset and Brown-out Reset

High Resolution PWM with Fine Edge Placement

- Up to 12 PWM Channels:
  - Four channels for Master
  - Eight channels for Slave
- 250 ps PWM Resolution
- Applications Include:
  - DC/DC Converters
  - AC/DC power supplies
  - Uninterruptable Power Supply (UPS)
  - Motor Control: BLDC, PMSM, SR, ACIM

Timers/Output Compare/Input Capture

- Two General Purpose 16-Bit Timers:
  - One each for Master and Slave
- Peripheral Trigger Generator (PTG) Module:
  - One module for Master
  - Slave can interrupt on select PTG sources
  - Useful for automating complex sequences
- 12 SCCP Modules:
  - Eight modules for Master
  - Four modules for Slave
  - Timer, Capture/Compare and PWM Modes
  - 16 or 32-bit time base
  - 16 or 32-bit capture
  - 4-deep capture buffer
  - Fully Asynchronous Operation, Available in Sleep Modes

© 2017-2018 Microchip Technology Inc.

Advanced Analog Features

- Four ADC Modules:
  - One module for Master core
  - Three modules for Slave core
  - 12-bit, 3.5 Msps ADC
  - Up to 18 conversion channels
- Four DAC/Analog Comparator Modules:
  - One module for Master core
  - Three modules for Slave core
  - 12-bit DACs with hardware slope compensation
  - 15 ns analog comparators
- Three PGA Modules:
  - Three modules for Slave core
  - Can be read by Master ADC
  - Option to interface with Master ADC
- Shared DAC/Analog Output:
  - DAC/analog comparator outputs
  - PGA outputs

Communication Interfaces

- Three UART Modules:
  - Two modules for Master core
  - One module for Slave core
  - Support for DMX, LIN/J2602 protocols and IrDA®
- Three 4-Wire SPI/I^2S Modules:
  - Two modules for Master core
  - One module for Slave core
- CAN Flexible Data-Rate (FD) Module for the Master Core
- Three I^2C Modules:
  - Two modules for Master
  - One module for Slave
  - Support for SMBus

Other Features

- PPS to Allow Function Remap
- Programmable Cyclic Redundancy Check (CRC) for the Master
- Two SENT Modules for the Master

Direct Memory Access (DMA)

- Eight DMA Channels:
  - Six DMA channels available for the Master core
  - Two DMA channels available for the Slave core

Debugger Development Support

- In-Circuit and In-Application Programming
- Simultaneous Debugging Support for Master and Slave Cores
- Master Only Debug and Slave Only Debug Support
- Master with Three Complex, Five Simple Breakpoints and Slave with One Complex, Two Simple Breakpoints
- IEEE 1149.2 Compatible (JTAG) Boundary Scan
- Trace Buffer and Run-Time Watch

Safety Features

- DMT (Deadman Timer)
- ECC (Error Correcting Code)
- WDT (Watchdog Timer)
- CodeGuard™ Security
- CRC (Cyclic Redundancy Check)
- Two-Speed Start-up
- Fail-Safe Clock Monitoring
- Backup FRC (BFRC)
- Capless Internal Voltage Regulator
- Virtual Pins for Redundancy and Monitoring

© 2017-2018 Microchip Technology Inc.

TABLE 1: MASTER AND SLAVE CORE FEATURES

Feature	Master Core	Slave Core	Shared
Core Frequency	90 MIPS @ 180 MHz	100 MIPS @ 200 MHz	—
Program Memory	64K-128 Kbytes	24 Kbytes (PRAM)(2)	—
Internal Data RAM	16 Kbytes	4 Kbytes	—
16-Bit Timer	1	1	—
DMA	6	2	—
SCCP (Capture/Compare/Timer)	8	4	—
UART	2	1	—
SPI/I^2S	2	1	—
I^2C	2	1	—
CAN FD	1	—	—
SENT	2	—	—
CRC	1	—	—
QEI	1	1	—
PTG	1	—	—
CLC	4	4	—
16-Bit High-Speed PWM	4	8	—
ADC 12-Bit	1	3	—
Digital Comparator	4	4	—
12-Bit DAC/Analog CMP Module	1	3	—
Watchdog Timer	1	1	—
Deadman Timer	1	—	—
Input/Output	69	69	69
Simple Breakpoints	5	2	—
PGAs(1)	—	3	3
DAC Output Buffer	—	—	1
Oscillator	1	1	1

Note 1: Slave owns the peripheral/feature, but it is shared with the Master.

2: Dual Partition feature is available on Slave PRAM.

dsPIC33CH128MP508 PRODUCT FAMILIES

The device names, pin counts, memory sizes and peripheral availability of each device are listed in Table 2. The following pages show their pinout diagrams.

TABLE 2: dsPIC33CHXXXMP50X FAMILY

Product	Core	Pins	Flash[1]	Data RAM	12-ADC Module	ADC Channels	Timers	SCCP	CAN FD	SENT	UART	SPI/I²S	I²C	QEI	CLC	PTG	CRC	PWM (High Resolution)	Analog Comparators	PGA	Current Bias Source	REFO
dsPIC33CH64MP502	Master	28	64K	16K	1	12	1	8	1	2	2	2	2	1	4	1	1	4	1	—	1	1
	Slave		24K	4K	3	11	1	4	—	—	1	1	1	1	4	—	—	8	3	3	—	1
dsPIC33CH128MP502	Master	28	128K	16K	1	12	1	8	1	2	2	2	2	1	4	1	1	4	1	—	1	1
	Slave		24K	4K	3	11	1	4	—	—	1	1	1	1	4	—	—	8	3	3	—	1
dsPIC33CH64MP503	Master	36	64K	16K	1	16	1	8	1	2	2	2	2	1	4	1	1	4	1	—	1	1
	Slave		24K	4K	3	16	1	4	—	—	1	1	1	1	4	—	—	8	3	3	—	1
dsPIC33CH128MP503	Master	36	128K	16K	1	15	1	8	1	2	2	2	2	1	4	1	1	4	1	—	1	1
	Slave		24K	4K	3	16	1	4	—	—	1	1	1	1	4	—	—	8	3	3	—	1
dsPIC33CH64MP505	Master	48	64K	16K	1	16	1	8	1	2	2	2	2	1	4	1	1	4	1	—	1	1
	Slave		24K	4K	3	15	1	4	—	—	1	1	1	1	4	—	—	8	3	3	—	1
dsPIC33CH128MP505	Master	48	128K	16K	1	16	1	8	1	2	2	2	2	1	4	1	1	4	1	—	1	1
	Slave		24K	4K	3	15	1	4	—	—	1	1	1	1	4	—	—	8	3	3	—	1
dsPIC33CH64MP506	Master	64	64K	16K	1	16	1	8	1	2	2	2	2	1	4	1	1	4	1	—	1	1
	Slave		24K	4K	3	18	1	4	—	—	1	1	1	1	4	—	—	8	3	3	—	1
dsPIC33CH128MP506	Master	64	128K	16K	1	16	1	8	1	2	2	2	2	1	4	1	1	4	1	—	1	1
	Slave		24K	4K	3	18	1	4	—	—	1	1	1	1	4	—	—	8	3	3	—	1
dsPIC33CH64MP508	Master	80	64K	16K	1	16	1	8	1	2	2	2	2	1	4	1	1	4	1	—	1	1
	Slave		24K	4K	3	18	1	4	—	—	1	1	1	1	4	—	—	8	3	3	—	1
dsPIC33CH128MP508	Master	80	128K	16K	1	16	1	8	1	2	2	2	2	1	4	1	1	4	1	—	1	1
	Slave		24K	4K	3	18	1	4	—	—	1	1	1	1	4	—	—	8	3	3	—	1

Note 1: For the Slave core, the implemented program memory of 24K is PRAM.

© 2017-2018 Microchip Technology Inc.

TABLE 3: dsPIC33CHXXXMP20X FAMILY WITH NO CAN FD

Product	Core	Pins	Flash[1]	Data RAM	ADC Modules	ADC Channels	Timers	SCCP	CAN FD	SENT	UART	SPI/I²S	I²C	QEI	CLC	PTG	CRC	PWM (High Resolution)	Analog Comparators	PGA	Current Bias Source	REFO
dsPIC33CH64MP202	Master	28	64K	16K	1	12	1	8	—	2	2	2	2	1	4	1	1	4	1	—	1	1
	Slave		24K	4K	3	11	1	4	—	—	1	1	1	1	4	—	—	8	3	3	—	1
dsPIC33CH128MP202	Master	28	128K	16K	1	12	1	8	—	2	2	2	2	1	4	1	1	4	1	—	1	1
	Slave		24K	4K	3	11	1	4	—	—	1	1	1	1	4	—	—	8	3	3	—	1
dsPIC33CH64MP203	Master	36	64K	16K	1	16	1	8	—	2	2	2	2	1	4	1	1	4	1	—	1	1
	Slave		24K	4K	3	16	1	4	—	—	1	1	1	1	4	—	—	8	3	3	—	1
dsPIC33CH128MP203	Master	36	128K	16K	1	15	1	8	—	2	2	2	2	1	4	1	1	4	1	—	1	1
	Slave		24K	4K	3	16	1	4	—	—	1	1	1	1	4	—	—	8	3	3	—	1
dsPIC33CH64MP205	Master	48	64K	16K	1	16	1	8	—	2	2	2	2	1	4	1	1	4	1	—	1	1
	Slave		24K	4K	3	15	1	4	—	—	1	1	1	1	4	—	—	8	3	3	—	1
dsPIC33CH128MP205	Master	48	128K	16K	1	16	1	8	—	2	2	2	2	1	4	1	1	4	1	—	1	1
	Slave		24K	4K	3	15	1	4	—	—	1	1	1	1	4	—	—	8	3	3	—	1
dsPIC33CH64MP206	Master	64	64K	16K	1	16	1	8	—	2	2	2	2	1	4	1	1	4	1	—	1	1
	Slave		24K	4K	3	18	1	4	—	—	1	1	1	1	4	—	—	8	3	3	—	1
dsPIC33CH128MP206	Master	64	128K	16K	1	16	1	8	—	2	2	2	2	1	4	1	1	4	1	—	1	1
	Slave		24K	4K	3	18	1	4	—	—	1	1	1	1	4	—	—	8	3	3	—	1
dsPIC33CH64MP208	Master	80	64K	16K	1	16	1	8	—	2	2	2	2	1	4	1	1	4	1	—	1	1
	Slave		24K	4K	3	18	1	4	—	—	1	1	1	1	4	—	—	8	3	3	—	1
dsPIC33CH128MP208	Master	80	128K	16K	1	16	1	8	—	2	2	2	2	1	4	1	1	4	1	—	1	1
	Slave		24K	4K	3	18	1	4	—	—	1	1	1	1	4	—	—	8	3	3	—	1

Note 1: For the Slave core, the implemented program memory of 24K is PRAM.

© 2017-2018 Microchip Technology Inc.

Pin Diagrams

28-Pin SSOP(1)

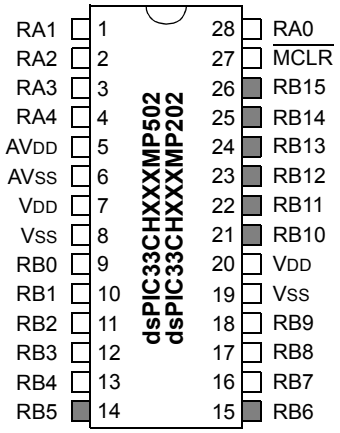

Note 1: **Shaded pins** are up to 5.5 VDC tolerant (refer to Table 3-28 and Table 4-25). For the list of analog ports, refer to Table 3-27 and Table 4-24.

TABLE 4: 28-PIN SSOP

Pin #	Master Core	Slave Core
1	AN1/RA1	S1AN15/S1RA1
2	AN2/RA2	S1AN16/S1RA2
3	AN3/IBIAS0/RA3	S1AN0/S1CMP1A/S1PGA1P1/S1RA3
4	AN4/IBIAS1/RA4	$\overline{\text{S1MCLR3}}$/S1AN1/S1CMP2A/S1PGA2P1/S1PGA3P2/S1RA4
5	AVDD	AVDD
6	AVSS	AVSS
7	VDD	VDD
8	VSS	VSS
9	OSCI/CLKI/AN5/**RP32**/RB0	S1AN5/**S1RP32**/S1RB0
10	OSCO/CLKO/AN6/IBIAS2/**RP33**/RB1(1)	S1AN4/**S1RP33**/S1RB1
11	DACOUT/AN7/CMP1D/**RP34**/INT0/RB2	$\overline{\text{S1MCLR2}}$/S1AN3/S1ANC0/S1ANC1/S1CMP1D/S1CMP2D/S1CMP3D/ **S1RP34**/S1INT0/S1RB2
12	PGD2/AN8/**RP35**/RB3	S1PGD2/S1AN18/S1CMP3A/S1PGA3P1/**S1RP35**/S1RB3
13	PGC2/**RP36**/RB4	S1PGC2/S1AN9/**S1RP36**/S1PWM5L/S1RB4
14	PGD3/**RP37**/SDA2/RB5	S1PGD3/**S1RP37**/S1RB5
15	PGC3/**RP38**/SCL2/RB6	S1PGC3/**S1RP38**/S1RB6
16	TDO/AN9/**RP39**/RB7	$\overline{\text{S1MCLR1}}$/S1AN6/**S1RP39**/S1PWM5H/S1RB7
17	PGD1/AN10/**RP40**/SCL1/RB8	S1PGD1/S1AN7/**S1RP40**/S1SCL1/S1RB8
18	PGC1/AN11/**RP41**/SDA1/RB9	S1PGC1/**S1RP41**/S1SDA1/S1RB9
19	VSS	VSS
20	VDD	VDD
21	TMS/**RP42**/PWM3H/RB10	**S1RP42**/S1PWM3H/S1RB10
22	TCK/**RP43**/PWM3L/RB11	**S1RP43**/S1PWM8H/S1PWM3L/S1RB11
23	TDI/**RP44**/PWM2H/RB12	**S1RP44**/S1PWM2H/S1RB12
24	**RP45**/PWM2L/RB13	**S1RP45**/S1PWM7H/S1PWM2L/S1RB13
25	**RP46**/PWM1H/RB14	**S1RP46**/S1PWM1H/S1RB14
26	**RP47**/PWM1L/RB15	**S1RP47**/S1PWM6H/S1PWM1L/S1RB15
27	$\overline{\text{MCLR}}$	—
28	AN0/CMP1A/RA0	S1RA0

Legend: **RPn** and **S1RPn** represent remappable pins for Peripheral Pin Select functions.

Note 1: At device power-up (POR), a pulse with an amplitude around 2V and a duration greater than 500 µs may be observed on this device pin, independent of pull-down resistors. It is recommended not to use this pin as an output driver unless the circuit being driven can endure this active duration.

© 2017-2018 Microchip Technology Inc.

Pin Diagrams (Continued)

28-Pin UQFN(1,2)

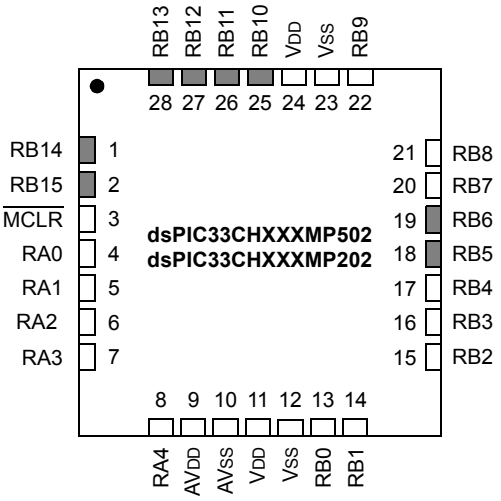

Note 1: **Shaded pins** are up to 5.5 VDC tolerant (refer to Table 3-28 and Table 4-25). For the list of analog ports, refer to Table 3-27 and Table 4-24.

2: The large center pad on the bottom of the package may be left floating or connected to VSS. The four-corner anchor pads are internally connected to the large bottom pad, and therefore, must be connected to the same net as the large center pad.

TABLE 5: 28-PIN UQFN

Pin #	Master Core	Slave Core
1	**RP46**/PWM1H/RB14	**S1RP46**/S1PWM1H/S1RB14
2	**RP47**/PWM1L/RB15	**S1RP47**/S1PWM6H/S1PWM1L/S1RB15
3	$\overline{\text{MCLR}}$	—
4	AN0/CMP1A/RA0	S1RA0
5	AN1/RA1	S1AN15/S1RA1
6	AN2/RA2	S1AN16/S1RA2
7	AN3/IBIAS0/RA3	S1AN0/S1CMP1A/S1PGA1P1/S1RA3
8	AN4/IBIAS1/RA4	$\overline{\text{S1MCLR3}}$/S1AN1/S1CMP2A/S1PGA2P1/S1PGA3P2/S1RA4
9	AVDD	AVDD
10	AVSS	AVSS
11	VDD	VDD
12	VSS	VSS
13	OSCI/CLKI/AN5/**RP32**/RB0	S1AN5/**S1RP32**/S1RB0
14	OSCO/CLKO/AN6/IBIAS2/**RP33**/RB1	S1AN4/**S1RP33**/S1RB1
15	DACOUT/AN7/CMP1D/**RP34**/INT0/RB2	$\overline{\text{S1MCLR2}}$/S1AN3/S1ANC0/S1ANC1/S1CMP1D/S1CMP2D/S1CMP3D/**S1RP34**/S1INT0/S1RB2
16	PGD2/AN8/**RP35**/RB3	S1PGD2/S1AN18/S1CMP3A/S1PGA3P1/**S1RP35**/S1RB3
17	PGC2/**RP36**/RB4	S1PGC2/S1AN9/**S1RP36**/S1PWM5L/S1RB4
18	PGD3/**RP37**/SDA2/RB5	S1PGD3/**S1RP37**/S1RB5
19	PGC3/**RP38**/SCL2/RB6	S1PGC3/**S1RP38**/S1RB6
20	TDO/AN9/**RP39**/RB7	$\overline{\text{S1MCLR1}}$/S1AN6/**S1RP39**/S1PWM5H/S1RB7
21	PGD1/AN10/**RP40**/SCL1/RB8	S1PGD1/S1AN7/**S1RP40**/S1SCL1/S1RB8
22	PGC1/AN11/**RP41**/SDA1/RB9	S1PGC1/**S1RP41**/S1SDA1/S1RB9
23	VSS	VSS
24	VDD	VDD
25	TMS/**RP42**/PWM3H/RB10	**S1RP42**/S1PWM3H/S1RB10
26	TCK/**RP43**/PWM3L/RB11	**S1RP43**/S1PWM8H/S1PWM3L/S1RB11
27	TDI/**RP44**/PWM2H/RB12	**S1RP44**/S1PWM2H/S1RB12
28	**RP45**/PWM2L/RB13	**S1RP45**/S1PWM7H/S1PWM2L/S1RB13

Legend: **RPn** and **S1RPn** represent remappable pins for Peripheral Pin Select functions.

Pin Diagrams (Continued)

36-Pin UQFN(1,2)

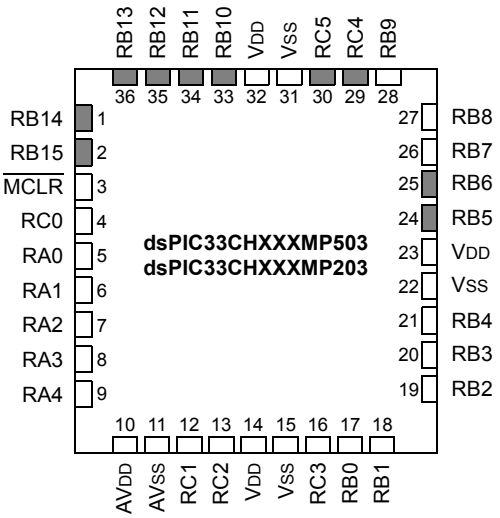

Note 1: **Shaded pins** are up to 5.5 VDC tolerant (refer to Table 3-28 and Table 4-25). For the list of analog ports, refer to Table 3-27 and Table 4-24.

2: The large center pad on the bottom of the package may be left floating or connected to VSS. The four-corner anchor pads are internally connected to the large bottom pad, and therefore, must be connected to the same net as the large center pad.

© 2017-2018 Microchip Technology Inc.

TABLE 6: 36-PIN UQFN

Pin #	Master Core	Slave Core
1	**RP46**/PWM1H/RB14	**S1RP46**/S1PWM1H/S1RB14
2	**RP47**/PWM1L/RB15	**S1RP47**/S1PWM6H/S1PWM1L/S1RB15
3	$\overline{\text{MCLR}}$	—
4	AN12/IBIAS3/**RP48**/RC0	S1AN10/**S1RP48**/S1RC0
5	AN0/CMP1A/RA0	S1RA0
6	AN1/RA1	S1AN15/S1RA1
7	AN2/RA2	S1AN16/S1RA2
8	AN3/IBIAS0/RA3	S1AN0/S1CMP1A/S1PGA1P1/S1RA3
9	AN4/IBIAS1/RA4	$\overline{\text{S1MCLR3}}$/S1AN1/S1CMP2A/S1PGA2P1/S1PGA3P2/S1RA4
10	AVDD	AVDD
11	AVSS	AVSS
12	AN13/ISRC0/**RP49**/RC1	S1ANA1/**S1RP49**/S1RC1
13	AN14/ISRC1/**RP50**/RC2	S1ANA0/**S1RP50**/S1RC2
14	VDD	VDD
15	VSS	VSS
16	CMP1B/**RP51**/RC3	S1AN8/S1CMP3B/**S1RP51**/S1RC3
17	OSCI/CLKI/AN5/**RP32**/RB0	S1AN5/**S1RP32**/S1RB0
18	OSCO/CLKO/AN6/IBIAS2/**RP33**/RB1	S1AN4/**S1RP33**/S1RB1
19	DACOUT/AN7/CMP1D/**RP34**/INT0/RB2	$\overline{\text{S1MCLR2}}$/S1AN3/S1ANC0/S1ANC1/S1CMP1D/S1CMP2D/S1CMP3D/ **S1RP34**/S1INT0/S1RB2
20	PGD2/AN8/**RP35**/RB3	S1PGD2/S1AN18/S1CMP3A/S1PGA3P1/**S1RP35**/S1RB3
21	PGC2/**RP36**/RB4	S1PGC2/S1AN9/**S1RP36**/S1PWM5L/S1RB4
22	VSS	VSS
23	VDD	VDD
24	PGD3/**RP37**/SDA2/RB5	S1PGD3/**S1RP37**/S1RB5
25	PGC3/**RP38**/SCL2/RB6	S1PGC3/**S1RP38**/S1RB6
26	TDO/AN9/**RP39**/RB7	$\overline{\text{S1MCLR1}}$/S1AN6/**S1RP39**/S1PWM5H/S1RB7
27	PGD1/AN10/**RP40**/SCL1/RB8	S1PGD1/S1AN7/**S1RP40**/S1SCL1/S1RB8
28	PGC1/AN11/**RP41**/SDA1/RB9	S1PGC1/**S1RP41**/S1SDA1/S1RB9
29	**RP52**/RC4	**S1RP52**/S1PWM2H/S1RC4
30	**RP53**/RC5	**S1RP53**/S1PWM2L/S1RC5
31	VSS	VSS
32	VDD	VDD
33	TMS/**RP42**/PWM3H/RB10	**S1RP42**/S1PWM3H/S1RB10
34	TCK/**RP43**/PWM3L/RB11	**S1RP43**/S1PWM8H/S1PWM3L/S1RB11
35	TDI/**RP44**/PWM2H/RB12	**S1RP44**/S1PWM7L/S1RB12
36	**RP45**/PWM2L/RB13	**S1RP45**/S1PWM7H/S1RB13

Legend: **RPn** and **S1RPn** represent remappable pins for Peripheral Pin Select functions.

Pin Diagrams (Continued)

48-Pin QFN/TQFP/UQFN(1,2)

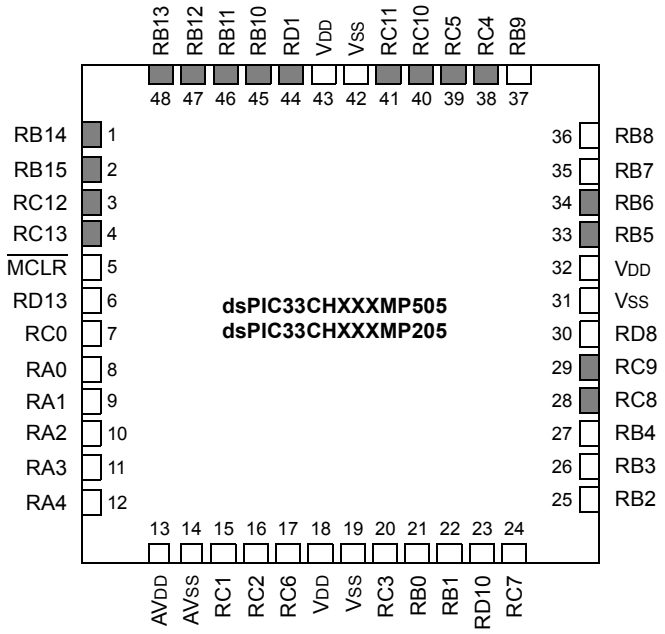

Note 1: **Shaded pins** are up to 5.5 VDC tolerant (refer to Table 3-28 and Table 4-25). For the list of analog ports, refer to Table 3-27 and Table 4-24.

2: The large center pad on the bottom of the package may be left floating or connected to VSS. The four-corner anchor pads are internally connected to the large bottom pad, and therefore, must be connected to the same net as the large center pad.

© 2017-2018 Microchip Technology Inc.

TABLE 7: 48-PIN QFN/TQFP/UQFN

Pin #	Master Core	Slave Core
1	**RP46**/PWM1H/RB14	**S1RP46**/S1PWM6L/S1RB14
2	**RP47**/PWM1L/RB15	**S1RP47**/S1PWM6H/S1RB15
3	**RP60**/RC12	**S1RP60**/S1PWM3H/S1RC12
4	**RP61**/RC13	**S1RP61**/S1PWM3L/S1RC13
5	$\overline{\text{MCLR}}$	—
6	RD13	S1ANN0/S1PGA1N2/S1RD13
7	AN12/IBIAS3/**RP48**/RC0	S1AN10/**S1RP48**/S1RC0
8	AN0/CMP1A/RA0	S1RA0
9	AN1/RA1	S1AN15/S1RA1
10	AN2/RA2	S1AN16/S1RA2
11	AN3/IBIAS0/RA3	S1AN0/S1CMP1A/S1PGA1P1/S1RA3
12	AN4/IBIAS1/RA4	$\overline{\text{S1MCLR3}}$/S1AN1/S1CMP2A/S1PGA2P1/S1PGA3P2/S1RA4
13	AVDD	AVDD
14	AVSS	AVSS
15	AN13/ISRC0/**RP49**/RC1	S1ANA1/**S1RP49**/S1RC1
16	AN14/ISRC1/**RP50**/RC2	S1ANA0/**S1RP50**/S1RC2
17	**RP54**/RC6	S1AN11/S1CMP1B/**S1RP54**/S1RC6
18	VDD	VDD
19	VSS	VSS
20	CMP1B/**RP51**/RC3	S1AN8/S1CMP3B/**S1RP51**/S1RC3
21	OSCI/CLKI/AN5/**RP32**/RB0	S1AN5/**S1RP32**/S1RB0
22	OSCO/CLKO/AN6/IBIAS2/**RP33**/RB1	S1AN4/**S1RP33**/S1RB1
23	ISRC3/RD10	S1AN13/S1CMP2B/S1RD10
24	AN15/ISRC2/**RP55**/RC7	S1AN12/**S1RP55**/S1RC7
25	DACOUT/AN7/CMP1D/**RP34**/INT0/RB2	$\overline{\text{S1MCLR2}}$/S1AN3/S1ANC0/S1ANC1/S1CMP1D/S1CMP2D/S1CMP3D/**S1RP34**/S1INT0/S1RB2
26	PGD2/AN8/**RP35**/RB3	S1PGD2/S1AN18/S1CMP3A/S1PGA3P1/**S1RP35**/S1RB3
27	PGC2/**RP36**/RB4	S1PGC2/S1AN9/**S1RP36**/S1PWM5L/S1RB4
28	**RP56**/ASDA1/SCK2/RC8	**S1RP56**/S1ASDA1/S1SCK1/S1RC8
29	**RP57**/ASCL1/SDI2/RC9	**S1RP57**/S1ASCL1/S1SDI1/S1RC9
30	SDO2/PCI19/RD8	S1SDO1/S1PCI19/S1RD8
31	VSS	VSS
32	VDD	VDD
33	PGD3/**RP37**/SDA2/RB5	S1PGD3/**S1RP37**/S1RB5
34	PGC3/**RP38**/SCL2/RB6	S1PGC3/**S1RP38**/S1RB6
35	TDO/AN9/**RP39**/RB7	$\overline{\text{S1MCLR1}}$/S1AN6/**S1RP39**/S1PWM5H/S1RB7
36	PGD1/AN10/**RP40**/SCL1/RB8	S1PGD1/S1AN7/**S1RP40**/S1SCL1/S1RB8
37	PGC1/AN11/**RP41**/SDA1/RB9	S1PGC1/**S1RP41**/S1SDA1/S1RB9
38	**RP52**/RC4	**S1RP52**/S1PWM2H/S1RC4
39	**RP53**/RC5	**S1RP53**/S1PWM2L/S1RC5
40	**RP58**/RC10	**S1RP58**/S1PWM1H/S1RC10
41	**RP59**/RC11	**S1RP59**/S1PWM1L/S1RC11
42	VSS	VSS
43	VDD	VDD
44	**RP65**/RD1	**S1RP65**/S1PWM4H/S1RD1
45	TMS/**RP42**/PWM3H/RB10	**S1RP42**/S1PWM8L/S1RB10
46	TCK/**RP43**/PWM3L/RB11	**S1RP43**/S1PWM8H/S1RB11
47	TDI/**RP44**/PWM2H/RB12	**S1RP44**/S1PWM7L/S1RB12
48	**RP45**/PWM2L/RB13	**S1RP45**/S1PWM7H/S1RB13

Legend: **RPn** and **S1RPn** represent remappable pins for Peripheral Pin Select functions.

Pin Diagrams (Continued)

64-Pin TQFP/QFN(1,2)

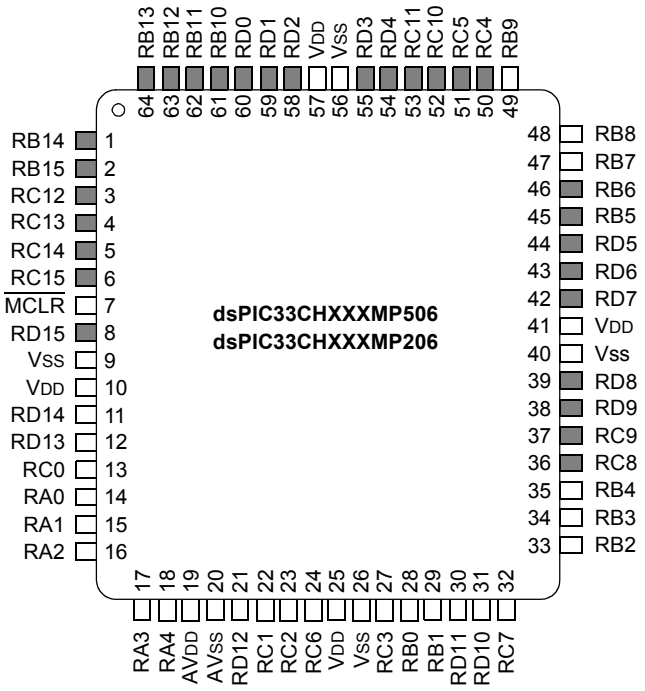

Note 1: **Shaded pins** are up to 5.5 VDC tolerant (refer to Table 3-28 and Table 4-25). For the list of analog ports, refer to Table 3-27 and Table 4-24.

2: The large center pad on the bottom of the package may be left floating or connected to VSS. The four-corner anchor pads are internally connected to the large bottom pad, and therefore, must be connected to the same net as the large center pad.

© 2017-2018 Microchip Technology Inc.

TABLE 8: 64-PIN TQFP/QFN

Pin #	Master Core	Slave Core
1	**RP46**/PWM1H/RB14	**S1RP46**/S1RB14
2	**RP47**/PWM1L/RB15	**S1RP47**/S1RB15
3	**RP60**/PWM4H/RC12	**S1RP60**/S1RC12
4	**RP61**/PWM4L/RC13	**S1RP61**/S1RC13
5	**RP62**/RC14	**S1RP62**/S1PWM7H/S1RC14
6	**RP63**/RC15	**S1RP63**/S1PWM7L/S1RC15
7	$\overline{\text{MCLR}}$	—
8	PCI22/RD15	S1PCI22/S1RD15
9	VSS	VSS
10	VDD	VDD
11	PCI21/RD14	S1ANN1/S1PGA2N2/S1PCI21/S1RD14
12	RD13	S1ANN0/S1PGA1N2/S1RD13
13	AN12/IBIAS3/**RP48**/RC0	S1AN10/**S1RP48**/S1RC0
14	AN0/CMP1A/RA0	S1RA0
15	AN1/RA1	S1AN15/S1RA1
16	AN2/RA2	S1AN16/S1RA2
17	AN3/IBIAS0/RA3	S1AN0/S1CMP1A/S1PGA1P1/S1RA3
18	AN4/IBIAS1/RA4	$\overline{\text{S1MCLR3}}$/S1AN1/S1CMP2A/S1PGA2P1/S1PGA3P2/S1RA4
19	AVDD	AVDD
20	AVSS	AVSS
21	RD12	S1AN14/S1PGA2P2/S1RD12
22	AN13/ISRC0/**RP49**/RC1	S1ANA1/**S1RP49**/S1RC1
23	AN14/ISRC1/**RP50**/RC2	S1ANA0/**S1RP50**/S1RC2
24	**RP54**/RC6	S1AN11/S1CMP1B/**S1RP54**/S1RC6
25	VDD	VDD
26	VSS	VSS
27	CMP1B/**RP51**/RC3	S1AN8/S1CMP3B/**S1RP51**/S1RC3
28	OSCI/CLKI/AN5/**RP32**/RB0	S1AN5/**S1RP32**/S1RB0
29	OSCO/CLKO/AN6/IBIAS2/**RP33**/RB1	S1AN4/**S1RP33**/S1RB1
30	RD11	S1AN17/S1PGA1P2/S1RD11
31	ISRC3/RD10	S1AN13/S1CMP2B/S1RD10
32	AN15/ISRC2/**RP55**/RC7	S1AN12/**S1RP55**/S1RC7
33	DACOUT/AN7/CMP1D/**RP34**/INT0/RB2	$\overline{\text{S1MCLR2}}$/S1AN3/S1ANC0/S1ANC1/S1CMP1D/S1CMP2D/S1CMP3D/**S1RP34**/S1INT0/S1RB2
34	PGD2/AN8/**RP35**/RB3	S1PGD2/S1AN18/S1CMP3A/S1PGA3P1/**S1RP35**/S1RB3
35	PGC2/**RP36**/RB4	S1PGC2/S1AN9/**S1RP36**/S1PWM5L/S1RB4
36	**RP56**/ASDA1/SCK2/RC8	**S1RP56**/S1ASDA1/S1SCK1/S1RC8
37	**RP57**/ASCL1/SDI2/RC9	**S1RP57**/S1ASCL1/S1SDI1/S1RC9
38	PCI20/RD9	S1PCI20/S1RD9
39	SDO2/PCI19/RD8	S1SDO1/S1PCI19/S1RD8
40	VSS	VSS
41	VDD	VDD
42	**RP71**/RD7	**S1RP71**/S1PWM8H/S1RD7
43	**RP70**/RD6	**S1RP70**/S1PWM6H/S1RD6
44	**RP69**/RD5	**S1RP69**/S1PWM6L/S1RD5
45	PGD3/**RP37**/SDA2/RB5	S1PGD3/**S1RP37**/S1RB5
46	PGC3/**RP38**/SCL2/RB6	S1PGC3/**S1RP38**/S1RB6
47	TDO/AN9/**RP39**/RB7	$\overline{\text{S1MCLR1}}$/S1AN6/**S1RP39**/S1PWM5H/S1RB7
48	PGD1/AN10/**RP40**/SCL1/RB8	S1PGD1/S1AN7/**S1RP40**/S1SCL1/S1RB8
49	PGC1/AN11/**RP41**/SDA1/RB9	S1PGC1/**S1RP41**/S1SDA1/S1RB9
50	**RP52**/RC4	**S1RP52**/S1PWM2H/S1RC4

Legend: **RPn** and **S1RPn** represent remappable pins for Peripheral Pin Select functions.

TABLE 8: 64-PIN TQFP/QFN (CONTINUED)

Pin #	Master Core	Slave Core
51	**RP53**/RC5	**S1RP53**/S1PWM2L/S1RC5
52	**RP58**/RC10	**S1RP58**/S1PWM1H/S1RC10
53	**RP59**/RC11	**S1RP59**/S1PWM1L/S1RC11
54	**RP68**/RD4	**S1RP68**/S1PWM3H/S1RD4
55	**RP67**/RD3	**S1RP67**/S1PWM3L/S1RD3
56	VSS	VSS
57	VDD	VDD
58	**RP66**/RD2	**S1RP66**/S1PWM8L/S1RD2
59	**RP65**/RD1	**S1RP65**/S1PWM4H/S1RD1
60	**RP64**/RD0	**S1RP64**/S1PWM4L/S1RD0
61	TMS/**RP42**/PWM3H/RB10	**S1RP42**/S1RB10
62	TCK/**RP43**/PWM3L/RB11	**S1RP43**/S1RB11
63	TDI/**RP44**/PWM2H/RB12	**S1RP44**/S1RB12
64	**RP45**/PWM2L/RB13	**S1RP45**/S1RB13

Legend: **RPn** and **S1RPn** represent remappable pins for Peripheral Pin Select functions.

© 2017-2018 Microchip Technology Inc.

Pin Diagrams (Continued)

80-Pin TQFP(1)

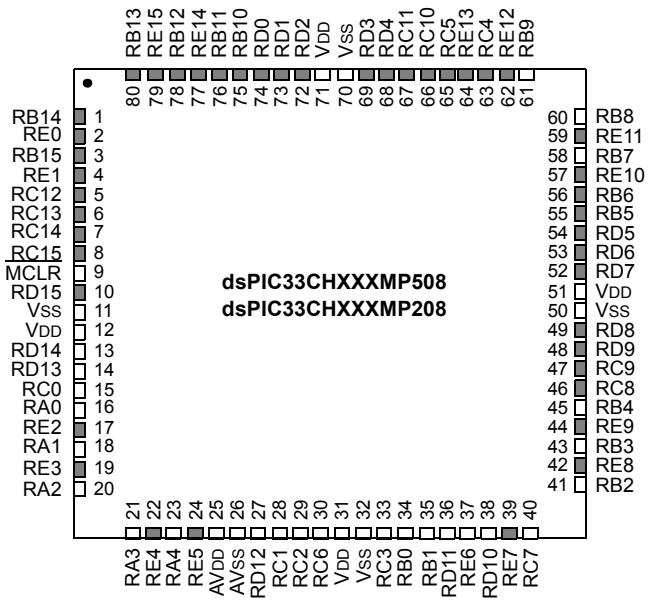

Note 1: **Shaded pins** are up to 5.5 VDC tolerant (refer to Table 3-28 and Table 4-25). For the list of analog ports, refer to Table 3-27 and Table 4-24.

TABLE 9: 80-PIN TQFP

Pin #	Master Core	Slave Core
1	**RP46**/PWM1H/RB14	**S1RP46**/S1RB14
2	RE0	S1RE0
3	**RP47**/PWM1L/RB15	**S1RP47**/S1RB15
4	RE1	S1RE1
5	**RP60**/PWM4H/RC12	**S1RP60**/S1RC12
6	**RP61**/PWM4L/RC13	**S1RP61**/S1RC13
7	**RP62**/RC14	**S1RP62**/S1PWM7H/S1RC14
8	**RP63**/RC15	**S1RP63**/S1PWM7L/S1RC15
9	$\overline{\text{MCLR}}$	—
10	PCI22/RD15	S1PCI22/S1RD15
11	VSS	VSS
12	VDD	VDD
13	PCI21/RD14	S1ANN1/S1PGA2N2/S1PCI21/S1RD14
14	RD13	S1ANN0/S1PGA1N2/S1RD13
15	AN12/IBIAS3/**RP48**/RC0	S1AN10/**S1RP48**/S1RC0
16	AN0/CMP1A/RA0	S1RA0
17	RE2	S1RE2
18	AN1/RA1	S1AN15/S1RA1
19	RE3	S1RE3
20	AN2/RA2	S1AN16/S1RA2
21	AN3/IBIAS0/RA3	S1AN0/S1CMP1A/S1PGA1P1/S1RA3
22	RE4	S1RE4
23	AN4/IBIAS1/RA4	$\overline{\text{S1MCLR3}}$/S1AN1/S1CMP2A/S1PGA2P1/S1PGA3P2/S1RA4
24	RE5	S1RE5
25	AVDD	AVDD
26	AVSS	AVSS
27	RD12	S1AN14/S1PGA2P2/S1RD12
28	AN13/ISRC0/**RP49**/RC1	S1ANA1/**S1RP49**/S1RC1
29	AN14/ISRC1/**RP50**/RC2	S1ANA0/**S1RP50**/S1RC2
30	**RP54**/RC6	S1AN11/S1CMP1B/**S1RP54**/S1RC6
31	VDD	VDD
32	VSS	VSS
33	CMP1B/**RP51**/RC3	S1AN8/S1CMP3B/**S1RP51**/S1RC3
34	OSCI/CLKI/AN5/**RP32**/RB0	S1AN5/**S1RP32**/S1RB0
35	OSCO/CLKO/AN6/IBIAS2/**RP33**/RB1	S1AN4/**S1RP33**/S1RB1
36	RD11	S1AN17/S1PGA1P2/S1RD11
37	RE6	S1PGA3N2/S1RE6
38	ISRC3/RD10	S1AN13/S1CMP2B/S1RD10
39	RE7	S1RE7
40	AN15/ISRC2/**RP55**/RC7	S1AN12/**S1RP55**/S1RC7
41	DACOUT/AN7/CMP1D/**RP34**/INT0/RB2	$\overline{\text{S1MCLR2}}$/S1AN3/S1ANC0/S1ANC1/S1CMP1D/S1CMP2D/S1CMP3D/**S1RP34**/S1INT0/S1RB2
42	RE8	S1RE8
43	PGD2/AN8/**RP35**/RB3	S1PGD2/S1AN18/S1CMP3A/S1PGA3P1/**S1RP35**/S1RB3
44	RE9	S1RE9
45	PGC2/**RP36**/RB4	S1PGC2/S1AN9/**S1RP36**/S1PWM5L/S1RB4
46	**RP56**/ASDA1/SCK2/RC8	**S1RP56**/S1ASDA1/S1SCK1/S1RC8
47	**RP57**/ASCL1/SDI2/RC9	**S1RP57**/S1ASCL1/S1SDI1/S1RC9
48	PCI20/RD9	S1PCI20/S1RD9
49	SDO2/PCI19/RD8	S1SDO1/S1PCI19/S1RD8
50	VSS	VSS

Legend: **RPn** and **S1RPn** represent remappable pins for Peripheral Pin Select functions.

© 2017-2018 Microchip Technology Inc.

TABLE 9: 80-PIN TQFP (CONTINUED)

Pin #	Master Core	Slave Core
51	VDD	VDD
52	**RP71**/RD7	**S1RP71**/S1PWM8H/S1RD7
53	**RP70**/RD6	**S1RP70**/S1PWM6H/S1RD6
54	**RP69**/RD5	**S1RP69**/S1PWM6L/S1RD5
55	PGD3/**RP37**/SDA2/RB5	S1PGD3/**S1RP37**/S1RB5
56	PGC3/**RP38**/SCL2/RB6	S1PGC3/**S1RP38**/S1RB6
57	RE10	S1RE10
58	TDO/AN9/**RP39**/RB7	$\overline{\text{S1MCLR1}}$/S1AN6/**S1RP39**/S1PWM5H/S1RB7
59	RE11	S1RE11
60	PGD1/AN10/**RP40**/SCL1/RB8	S1PGD1/S1AN7/**S1RP40**/S1SCL1/S1RB8
61	PGC1/AN11/**RP41**/SDA1/RB9	S1PGC1/**S1RP41**/S1SDA1/S1RB9
62	ASCL2/RE12	S1RE12
63	**RP52**/RC4	**S1RP52**/S1PWM2H/S1RC4
64	ASDA2/RE13	S1RE13
65	**RP53**/RC5	**S1RP53**/S1PWM2L/S1RC5
66	**RP58**/RC10	**S1RP58**/S1PWM1H/S1RC10
67	**RP59**/RC11	**S1RP59**/S1PWM1L/S1RC11
68	**RP68**/RD4	**S1RP68**/S1PWM3H/S1RD4
69	**RP67**/RD3	**S1RP67**/S1PWM3L/S1RD3
70	VSS	VSS
71	VDD	VDD
72	**RP66**/RD2	**S1RP66**/S1PWM8L/S1RD2
73	**RP65**/RD1	**S1RP65**/S1PWM4H/S1RD1
74	**RP64**/RD0	**S1RP64**/S1PWM4L/S1RD0
75	TMS/**RP42**/PWM3H/RB10	**S1RP42**/S1RB10
76	TCK/**RP43**/PWM3L/RB11	**S1RP43**/S1RB11
77	RE14	S1RE14
78	TDI/**RP44**/PWM2H/RB12	**S1RP44**/S1RB12
79	RE15	S1RE15
80	**RP45**/PWM2L/RB13	**S1RP45**/S1RB13

Legend: **RPn** and **S1RPn** represent remappable pins for Peripheral Pin Select functions.

Table of Contents

1.0 Device Overview 21
2.0 Guidelines for Getting Started with 16-Bit Digital Signal Controllers 29
3.0 Master Modules 35
4.0 Slave Modules 261
5.0 Master Slave Interface (MSI) 417
6.0 Oscillator with High-Frequency PLL 431
7.0 Power-Saving Features (Master and Slave) 471
8.0 Direct Memory Access (DMA) Controller 491
9.0 High-Resolution PWM (HSPWM) with Fine Edge Placement 501
10.0 Capture/Compare/PWM/Timer Modules (SCCP) 535
11.0 High-Speed Analog Comparator with Slope Compensation DAC 553
12.0 Quadrature Encoder Interface (QEI) (Master/Slave) 565
13.0 Universal Asynchronous Receiver Transmitter (UART) 583
14.0 Serial Peripheral Interface (SPI) 605
15.0 Inter-Integrated Circuit (I^2C) 623
16.0 Single-Edge Nibble Transmission (SENT) 633
17.0 Timer1 643
18.0 Configurable Logic Cell (CLC) 647
19.0 32-Bit Programmable Cyclic Redundancy Check (CRC) Generator 659
20.0 Current Bias Generator (CBG) 663
21.0 Special Features 667
22.0 Instruction Set Summary 713
23.0 Development Support 723
24.0 Electrical Characteristics 727
25.0 Packaging Information 767
Appendix A: Revision History 791
Index 793
The Microchip Web Site 803
Customer Change Notification Service 803
Customer Support 803
Product Identification System 805

© 2017-2018 Microchip Technology Inc.

TO OUR VALUED CUSTOMERS

It is our intention to provide our valued customers with the best documentation possible to ensure successful use of your Microchip products. To this end, we will continue to improve our publications to better suit your needs. Our publications will be refined and enhanced as new volumes and updates are introduced.

If you have any questions or comments regarding this publication, please contact the Marketing Communications Department via E-mail at **docerrors@microchip.com**. We welcome your feedback.

Most Current Data Sheet

To obtain the most up-to-date version of this data sheet, please register at our Worldwide Web site at:

http://www.microchip.com

You can determine the version of a data sheet by examining its literature number found on the bottom outside corner of any page. The last character of the literature number is the version number, (e.g., DS30000000A is version A of document DS30000000).

Errata

An errata sheet, describing minor operational differences from the data sheet and recommended workarounds, may exist for current devices. As device/documentation issues become known to us, we will publish an errata sheet. The errata will specify the revision of silicon and revision of document to which it applies.

To determine if an errata sheet exists for a particular device, please check with one of the following:

- Microchip's Worldwide Web site; **http://www.microchip.com**
- Your local Microchip sales office (see last page)

When contacting a sales office, please specify which device, revision of silicon and data sheet (include literature number) you are using.

Customer Notification System

Register on our web site at **www.microchip.com** to receive the most current information on all of our products.

Referenced Sources

This device data sheet is based on the following individual chapters of the *"dsPIC33/PIC24 Family Reference Manual"*. These documents should be considered as the general reference for the operation of a particular module or device feature.

Note 1: To access the documents listed below, browse to the documentation section of the dsPIC33CH128MP508 product page of the Microchip web site (www.microchip.com) or select a family reference manual section from the following list.

In addition to parameters, features and other documentation, the resulting page provides links to the related family reference manual sections.

- **"Introduction"** (DS70573)
- **"dsPIC33E Enhanced CPU"** (DS70005158)
- **"dsPIC33E/PIC24E Program Memory"** (DS70000613)
- **"Data Memory"** (DS70595)
- **"Dual Partition Flash Program Memory"** (DS70005156)
- **"Flash Programming"** (DS70609)
- **"Reset"** (DS70602)
- **"Interrupts"** (DS70000600)
- **"I/O Ports with Edge Detect"** (DS70005322)
- **"Deadman Timer"** (DS70005155)
- **"CAN Flexible Data-Rate (FD) Protocol Module"** (DS70005340)
- **"12-Bit High-Speed, Multiple SARs A/D Converter (ADC)"** (DS70005213)
- **"Peripheral Trigger Generator (PTG)"** (DS70000669)
- **"Programmable Gain Amplifier (PGA)"** (DS70005146)
- **"Master Slave Interface (MSI) Module"** (DS70005278)
- **"Watchdog Timer and Power-Saving Modes"** (DS70615)
- **"Oscillator Module with High-Speed PLL"** (DS70005255)
- **"Timer1 Module"** (DS70005279)
- **"Direct Memory Access Controller (DMA)"** (DS39742)
- **"Capture/Compare/PWM/Timer (MCCP and SCCP)"** (DS33035)
- **"High-Resolution PWM with Fine Edge Placement"** (DS70005320)
- **"Serial Peripheral Interface (SPI) with Audio Codec Support"** (DS70005136)
- **"Inter-Integrated Circuit (I^2C)"** (DS70000195)
- **"Multiprotocol Universal Asynchronous Receiver Transmitter (UART) Module"** (DS70005288)
- **"Single-Edge Nibble Transmission (SENT) Module"** (DS70005145)
- **"32-Bit Programmable Cyclic Redundancy Check (CRC)"** (DS30009729)
- **"Configurable Logic Cell (CLC)"** (DS70005298)
- **"Quadrature Encoder Interface (QEI)"** (DS70000601)
- **"High-Speed Analog Comparator Module"** (DS70005280)
- **"Current Bias Generator (CBG)"** (DS70005253)
- **"Dual Watchdog Timer"** (DS70005250)
- **"Programming and Diagnostics"** (DS70608)
- **"CodeGuard™ Security"** (DS70634)

© 2017-2018 Microchip Technology Inc.

1.0 DEVICE OVERVIEW

Note 1: This data sheet summarizes the features of the dsPIC33CH128MP508 family of devices. It is not intended to be a comprehensive resource. To complement the information in this data sheet, refer to the related section of the *"dsPIC33/PIC24 Family Reference Manual"*, which is available from the Microchip web site (www.microchip.com).

2: Some registers and associated bits described in this section may not be available on all devices. Refer to **Section 3.2 "Master Memory Organization"** and **Section 4.2 "Slave Memory Organization"** in this data sheet for device-specific register and bit information.

This document contains device-specific information for the dsPIC33CH128MP508 Digital Signal Controller (DSC) and Microcontroller (MCU) devices.

dsPIC33CH128MP508 devices contain extensive Digital Signal Processor (DSP) functionality with a high-performance, 16-bit MCU architecture.

Figure 1-2 shows a general block diagram of the cores and peripheral modules of the Master and Slave. Table 1-1 lists the functions of the various pins shown in the pinout diagrams.

The Master core and Slave core can operate independently, and can be programmed and debugged separately during the application development. Both processor (Master and Slave) subsystems have their own interrupt controllers, clock generators, ICD, port logic, I/O MUXes and PPS. The device is equivalent to having two complete dsPIC® DSCs on a single die.

The Master core will execute the code from Program Flash Memory (PFM) and the Slave core will operate from Program RAM Memory (PRAM).

Once the code development is complete, the Master Flash will be programmed with the Master code, as well as the Slave code. After a Power-on Reset (POR), the Slave code from Master Flash will be loaded to the PRAM (program memory of the Slave) and the Slave can execute the code independently of the Master. The Master and Slave can communicate with each other using the Master Slave Interface (MSI) peripheral, and can exchange data between them.

Figure 1-1 shows the block diagram of the device operation during a POR and the process of transferring the Slave code from the Master to Slave PRAM.

The I/O ports are shared between the Master and Slave. Table 1 shows the number of peripherals and the shared peripherals that the Master and Slave own. There are Configuration bits in the Flash memory that specify the ownership (Master or Slave) of each device pin.

The default (erased) state of the Flash assigns all of the device pins to the Master.

The two cores (Master and Slave) can both be connected to debug tools, which support independent and simultaneous debugging. When the Slave core or Master core is debugged (non-Dual Debug mode), the S1MCLRx is not used. MCLR is used for programming and debugging both the Master core and the Slave core. S1MCLRx is only used when debugging both the cores at the same time.

In normal operation, the "owner" of a device pin is responsible for full control of that pin; this includes both the digital and analog functionality.

The pin owner's GPIO registers control all aspects of the I/O pad, including the ANSELx, CNPUx, CNPDx, ODCx registers and slew rate control.

Note: Both the Master and Slave cores can monitor a pin as an input, regardless of pin ownership. Pin ownership is valid only for the output functionality of the port.

FIGURE 1-1: SLAVE CORE CODE TRANSFER BLOCK DIAGRAM

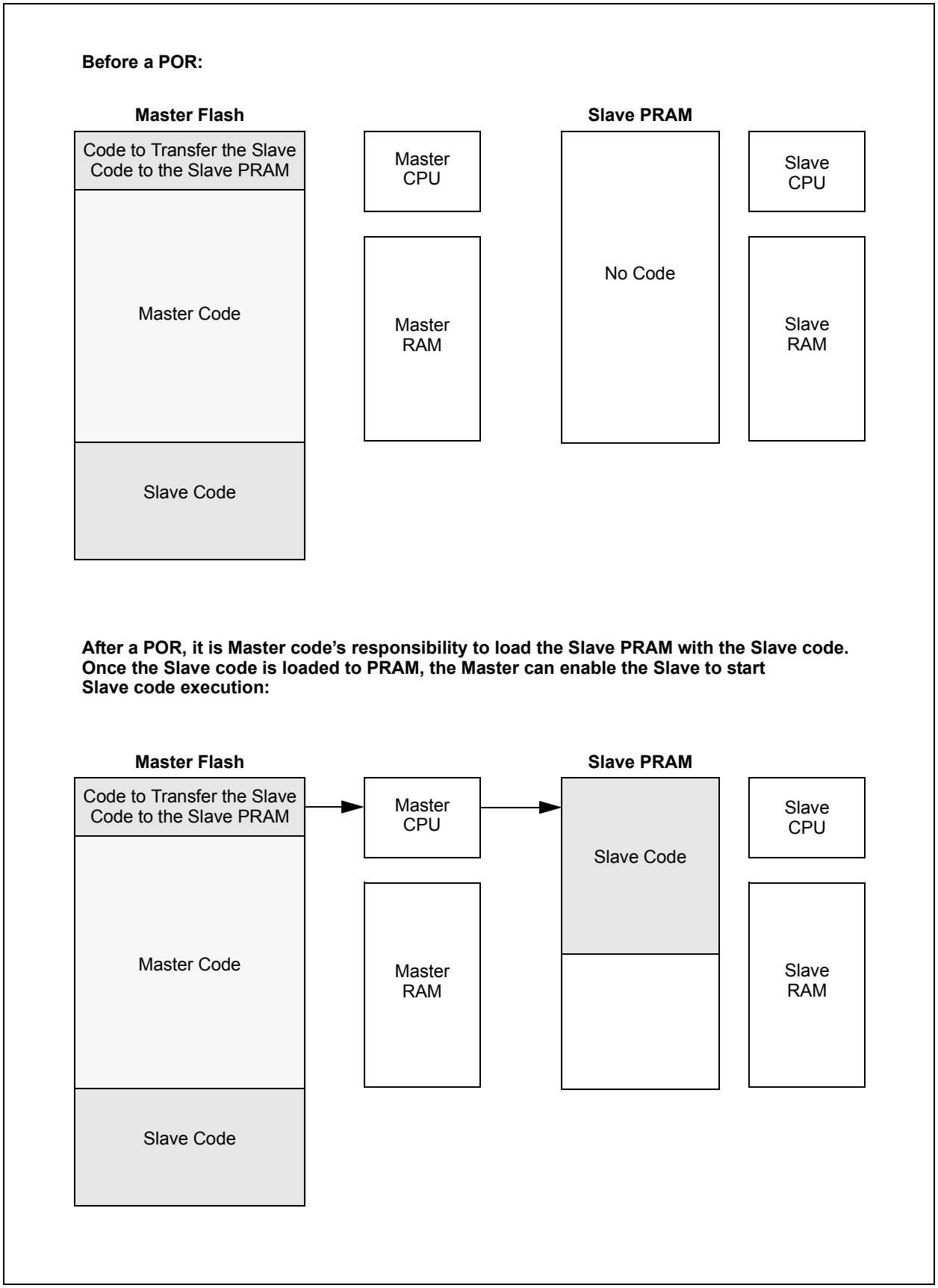

© 2017-2018 Microchip Technology Inc.

FIGURE 1-2: dsPIC33CH128MP508 FAMILY BLOCK DIAGRAM(1)

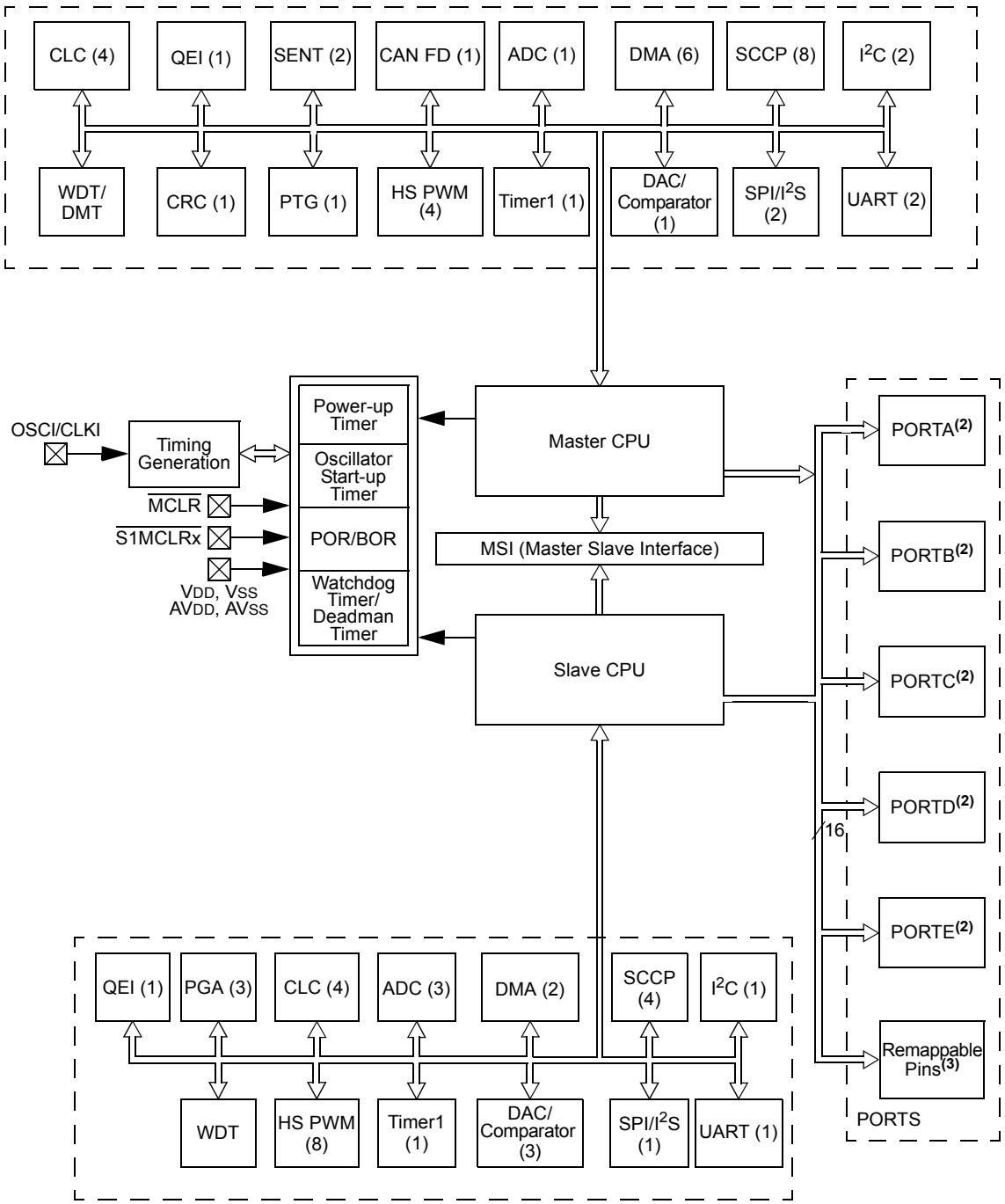

Note 1: The numbers in the parentheses are the number of instantiations of the module indicated.

2: Not all I/O pins or features are implemented on all device pinout configurations. See Table 1-1 for specific implementations by pin count.

3: Some peripheral I/Os are only accessible through remappable pins.

TABLE 1-1: PINOUT I/O DESCRIPTIONS

Pin Name(1)	Pin Type	Buffer Type	PPS	Description
AN0-AN18 S1AN0-S1AN18 S1ANA0, S1ANA1	I I I	Analog Analog Analog	No No No	Master analog input channels Slave analog input channels Slave alternate analog inputs
ADCTRG	I	ST	Yes	ADC Trigger Input 31
CAN1RX CAN1	I O	ST —	Yes Yes	CAN1 receive input CAN1 transmit output
CLKI CLKO	I O	ST/ CMOS —	No No	External Clock (EC) source input. Always associated with OSCI pin function. Oscillator crystal output. Connects to crystal or resonator in Crystal Oscillator mode. Optionally functions as CLKO in RC and EC modes. Always associated with OSCO pin function.
OSCI OSCO	I I/O	ST/ CMOS —	No No	Oscillator crystal input. ST buffer when configured in RC mode; CMOS otherwise. Oscillator crystal output. Connects to crystal or resonator in Crystal Oscillator mode. Optionally functions as CLKO in RC and EC modes.
REFOI/S1REFOI	I	ST	Yes	Reference clock input
REFCLKO/S1REFCLKO(3)	O	—	Yes	Reference clock output
INT0/S1INT0(3) INT1/S1INT1(3) INT2/S1INT2(3) INT3/S1INT3(3)	I I I I	ST ST ST ST	No Yes Yes Yes	External Interrupt 0 External Interrupt 1 External Interrupt 2 External Interrupt 3
IOCA<4:0>/S1IOCA<4:0>(3) IOCB<15:0>/S1IOCB<15:0>(3) IOCC<15:0>/S1IOCC<15:0>(3) IOCD<15:0>/S1IOCD<15:0>(3) IOCE<15:0>/S1IOCE<15:0>(3)	I I I I I	ST ST ST ST ST	No No No No No	Interrupt-on-Change input for PORTA Interrupt-on-Change input for PORTB Interrupt-on-Change input for PORTC Interrupt-on-Change input for PORTD Interrupt-on-Change input for PORTE
QEIA1 QEIB1 QEINDX1 QEIHOM1 QEICMP	I I I I O	ST ST ST ST —	Yes Yes Yes Yes Yes	QEI Input A QEI Input B QEI Index 1 input QEI Home 1 input QEI comparator output
RA0-RA4/S1RA0-S1RA4(3)	I/O	ST	No	PORTA is a bidirectional I/O port
RB0-RB15/S1RB0-S1RB15(3)	I/O	ST	No	PORTB is a bidirectional I/O port
RC0-RC15/S1RC0-S1RC15(3)	I/O	ST	No	PORTC is a bidirectional I/O port
RD0-RD15/S1RD0-S1RD15(3)	I/O	ST	No	PORTD is a bidirectional I/O port
RE0-RE15/S1RE0-S1RE15(3)	I/O	ST	No	PORTE is a bidirectional I/O port
T1CK/S1T1CK(3)	I	ST	Yes	Timer1 external clock input

Legend: CMOS = CMOS compatible input or output; Analog = Analog input; P = Power; ST = Schmitt Trigger input with CMOS levels; O = Output; I = Input; PPS = Peripheral Pin Select; TTL = TTL input buffer

Note 1: Not all pins are available in all package variants. See the **"Pin Diagrams"** section for pin availability.

2: These pins are remappable as well as dedicated. Some of the pins are associated with the Slave function and have S1 attached to the beginning of the name. For example, AN0 for the Slave is S1AN0.

3: S1 attached to the beginning of the name indicates the Slave feature for that function. For example, AN0 for the Slave is S1AN0.

© 2017-2018 Microchip Technology Inc.

TABLE 1-1: PINOUT I/O DESCRIPTIONS (CONTINUED)

Pin Name(1)	Pin Type	Buffer Type	PPS	Description
U1CTS/S1U1CTS(3)	I	ST	Yes	UART1 Clear-to-Send
U1RTS/S1U1RTS(3)	O	—	Yes	UART1 Request-to-Send
U1RX/S1U1RX(3)	I	ST	Yes	UART1 receive
U1TX/S1U1TX(3)	O	—	Yes	UART1 transmit
U1DSR/S1U1DSR	I	ST	Yes	UART1 Data-Set-Ready
U1DTR/S1U1DTR	O	—	Yes	UART1 Data-Terminal-Ready
U2CTS	I	ST	Yes	UART2 Clear-to-Send
U2RTS	O	—	Yes	UART2 Request-to-Send
U2RX	I	ST	Yes	UART2 receive
U2TX	O	—	Yes	UART2 transmit
U2DSR	I	ST	Yes	UART2 Data-Set-Ready
U2DTR	O	—	Yes	UART2 Data-Terminal-Ready
SENT1	I	ST	Yes	SENT1 input
SENT2	I	ST	Yes	SENT2 input
SENT1OUT	O	—	Yes	SENT1 output
SENT2OUT	O	—	Yes	SENT2 output
PTGTRG24	O	—	Yes	PTG Trigger Output 24
PTGTRG25	O	—	Yes	PTG Trigger Output 25
TCKI1-TCKI8/ S1TCKI1-S1TCKI4(3)	I	ST	Yes	SCCP Timer Inputs 1 through 8/1 through 4
ICM1-ICM8/ S1ICM1-S1ICM4(3)	I	ST	Yes	SCCP Capture Inputs 1 through 8/1 through 4
OCFA-OCFB/ S1OCFA-S1OCFB(3)	I	ST	Yes	SCCP Fault Inputs A through B
OCM1-OCM8/ S1OCM1-S1OCM4(3)	O	—	Yes	SCCP Compare Outputs 1 through 8/1 through 4
SCK1/S1SCK1(3)	I/O	ST	Yes	Synchronous serial clock input/output for SPI1
SDI1/S1SDI1(3)	I	ST	Yes	SPI1 data in
SDO1/S1SDO1(3)	O	—	Yes	SPI1 data out
SS1/S1SS1(3)	I/O	ST	Yes	SPI1 Slave synchronization or frame pulse I/O
SCK2	I/O	ST	Yes	Synchronous serial clock input/output for SPI2
SDI2	I	ST	Yes	SPI2 data in
SDO2	O	—	Yes	SPI2 data out
SS2	I/O	ST	Yes	SPI2 Slave synchronization or frame pulse I/O
SCL1/S1SCL1(3)	I/O	ST	No	Synchronous serial clock input/output for I2C1
SDA1/S1SDA1(3)	I/O	ST	No	Synchronous serial data input/output for I2C1
ASCL1	I/O	ST	No	Alternate synchronous serial clock input/output for I2C1
ASDA1	I/O	ST	No	Alternate synchronous serial data input/output for I2C1
SCL2	I/O	ST	No	Synchronous serial clock input/output for I2C2
SDA2	I/O	ST	No	Synchronous serial data input/output for I2C2
ASCL2	I/O	ST	No	Alternate synchronous serial clock input/output for I2C2
ASDA2	I/O	ST	No	Alternate synchronous serial data input/output for I2C2

Legend: CMOS = CMOS compatible input or output; Analog = Analog input; P = Power; ST = Schmitt Trigger input with CMOS levels; O = Output; I = Input; PPS = Peripheral Pin Select; TTL = TTL input buffer

Note 1: Not all pins are available in all package variants. See the **"Pin Diagrams"** section for pin availability.

2: These pins are remappable as well as dedicated. Some of the pins are associated with the Slave function and have S1 attached to the beginning of the name. For example, AN0 for the Slave is S1AN0.

3: S1 attached to the beginning of the name indicates the Slave feature for that function. For example, AN0 for the Slave is S1AN0.

TABLE 1-1: PINOUT I/O DESCRIPTIONS (CONTINUED)

Pin Name(1)	Pin Type	Buffer Type	PPS	Description
TMS	I	ST	No	JTAG Test mode select pin
TCK	I	ST	No	JTAG test clock input pin
TDI	I	ST	No	JTAG test data input pin
TDO	O	—	No	JTAG test data output pin
PCI8-PCI18/ S1PCI8-S1PCI18	I	ST	Yes	PWM Inputs 8 through 18
PWMEA-PWMED/ S1PWMEA-S1PWMED	O	—	Yes	PWM Event Outputs A through D
PCI19-PCI22/ S1PCI19-S1PCI22(3)	I	ST	No	PWM Inputs 19 through 22
PWM1L-PWM4L/S1PWM1L/ S1PWM8L(3)	O	—	No	PWM Low Outputs 1 through 8
PWM1H-PWM4H/ S1PWM1H-S1PWM8H(2,3)	O	—		PWM High Outputs 1 through 8
CLCINA-CLCIND/ S1CLCINA-S1CLCIND(3)	I	ST	Yes	CLC Inputs A through D
CLC1OUT-CLC4OUT	O	—	Yes	CLC Outputs 1 through 4
CMP1	O	—	Yes	Comparator 1 output
CMP1A/ S1CMP1A-S1CMP3A(3)	I	Analog	No	Comparator Channels 1A through 3A inputs
CMP1B/ S1CMP1B-S1CMP3B(3)	I	Analog	No	Comparator Channels 1B through 3B inputs
CMP1D/ S1CMP1D-S1CMP3D(3)	I	Analog	No	Comparator Channels 1D through 3D inputs
DACOUT	O	—	No	DAC output voltage
IBIAS3, IBIAS2, IBIAS1, IBIAS0/ISRC3, ISRC2, ISRC1, ISRC0	O	Analog	No	Constant-Current Outputs 0 through 3
S1PGA1P2	I	Analog	No	PGA1 Positive Input 2
S1PGA1N2	I	Analog	No	PGA1 Negative Input 2
S1PGA2P2	I	Analog	No	PGA2 Positive Input 2
S1PGA2N2	I	Analog	No	PGA2 Negative Input 2
S1PGA3P1-S1PGA3P2	I	Analog	No	PGA3 Positive Inputs 1 through 2
S1PGA3N2	I	Analog	No	PGA3 Negative Input 2
PGD1/S1PGD1(3)	I/O	ST	No	Data I/O pin for Programming/Debugging Communication Channel 1
PGC1/S1PGC1(3)	I	ST	No	Clock input pin for Programming/Debugging Communication Channel 1
PGD2/S1PGD2(3)	I/O	ST	No	Data I/O pin for Programming/Debugging Communication Channel 2
PGC2/S1PGC2(3)	I	ST	No	Clock input pin for Programming/Debugging Communication Channel 2
PGD3/S1PGD3(3)	I/O	ST	No	Data I/O pin for Programming/Debugging Communication Channel 3
PGC3/S1PGC3(3)	I	ST	No	Clock input pin for Programming/Debugging Communication Channel 3

Legend: CMOS = CMOS compatible input or output; Analog = Analog input; P = Power; ST = Schmitt Trigger input with CMOS levels; O = Output; I = Input; PPS = Peripheral Pin Select; TTL = TTL input buffer

Note 1: Not all pins are available in all package variants. See the **"Pin Diagrams"** section for pin availability.

2: These pins are remappable as well as dedicated. Some of the pins are associated with the Slave function and have S1 attached to the beginning of the name. For example, AN0 for the Slave is S1AN0.

3: S1 attached to the beginning of the name indicates the Slave feature for that function. For example, AN0 for the Slave is S1AN0.

© 2017-2018 Microchip Technology Inc.

TABLE 1-1: PINOUT I/O DESCRIPTIONS (CONTINUED)

Pin Name[1]	Pin Type	Buffer Type	PPS	Description
$\overline{\text{MCLR}}$/$\overline{\text{S1MCLR1}}$/$\overline{\text{S1MCLR2}}$/ $\overline{\text{S1MCLR3}}$	I/P	ST	No	Master Clear (Reset) input. This pin is an active-low Reset to the device. $\overline{\text{S1MCLRx}}$ is valid only for slave debug in Dual Debug mode.
AVDD	P	P	No	Positive supply for analog modules. This pin must be connected at all times.
AVSS	P	P	No	Ground reference for analog modules. This pin must be connected at all times.
VDD	P	—	No	Positive supply for peripheral logic and I/O pins
VSS	P	—	No	Ground reference for logic and I/O pins

Legend: CMOS = CMOS compatible input or output; Analog = Analog input; P = Power; ST = Schmitt Trigger input with CMOS levels; O = Output; I = Input; PPS = Peripheral Pin Select; TTL = TTL input buffer

Note 1: Not all pins are available in all package variants. See the **"Pin Diagrams"** section for pin availability.

2: These pins are remappable as well as dedicated. Some of the pins are associated with the Slave function and have S1 attached to the beginning of the name. For example, AN0 for the Slave is S1AN0.

3: S1 attached to the beginning of the name indicates the Slave feature for that function. For example, AN0 for the Slave is S1AN0.

NOTES:

© 2017-2018 Microchip Technology Inc.

2.0 GUIDELINES FOR GETTING STARTED WITH 16-BIT DIGITAL SIGNAL CONTROLLERS

2.1 Basic Connection Requirements

Getting started with the family devices of the dsPIC33CH128MP508 requires attention to a minimal set of device pin connections before proceeding with development. The following is a list of pin names which must always be connected:

- All VDD and VSS pins
  (see **Section 2.2 "Decoupling Capacitors"**)
- All AVDD and AVSS pins
  regardless if ADC module is not used (see **Section 2.2 "Decoupling Capacitors"**)
- $\overline{\text{MCLR}}$ pin
  (see **Section 2.3 "Master Clear (MCLR) Pin"**)
- PGCx/PGDx pins
  used for In-Circuit Serial Programming™ (ICSP™) and debugging purposes (see **Section 2.4 "ICSP Pins"**)
- OSCI and OSCO pins
  when an external oscillator source is used (see **Section 2.5 "External Oscillator Pins"**)

2.2 Decoupling Capacitors

The use of decoupling capacitors on every pair of power supply pins, such as VDD, VSS, AVDD and AVSS is required.

Consider the following criteria when using decoupling capacitors:

- **Value and type of capacitor:** Recommendation of 0.1 µF (100 nF), 10-20V. This capacitor should be a low-ESR and have resonance frequency in the range of 20 MHz and higher. It is recommended to use ceramic capacitors.
- **Placement on the printed circuit board:** The decoupling capacitors should be placed as close to the pins as possible. It is recommended to place the capacitors on the same side of the board as the device. If space is constricted, the capacitor can be placed on another layer on the PCB using a via; however, ensure that the trace length from the pin to the capacitor is within one-quarter inch (6 mm) in length.
- **Handling high-frequency noise:** If the board is experiencing high-frequency noise, above tens of MHz, add a second ceramic-type capacitor in parallel to the above described decoupling capacitor. The value of the second capacitor can be in the range of 0.01 µF to 0.001 µF. Place this second capacitor next to the primary decoupling capacitor. In high-speed circuit designs, consider implementing a decade pair of capacitances as close to the power and ground pins as possible. For example, 0.1 µF in parallel with 0.001 µF.
- **Maximizing performance:** On the board layout from the power supply circuit, run the power and return traces to the decoupling capacitors first, and then to the device pins. This ensures that the decoupling capacitors are first in the power chain. Equally important is to keep the trace length between the capacitor and the power pins to a minimum, thereby reducing PCB track inductance.

© 2017-2018 Microchip Technology Inc.

FIGURE 2-1: RECOMMENDED MINIMUM CONNECTION

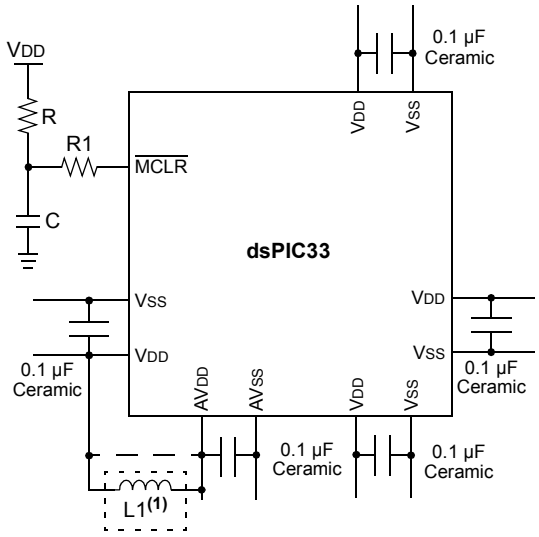

Note 1: As an option, instead of a hard-wired connection, an inductor (L1) can be substituted between VDD and AVDD to improve ADC noise rejection. The inductor impedance should be less than 1Ω and the inductor capacity greater than 10 mA.

Where:

$$f = \frac{F_{CNV}}{2} \quad \text{(i.e., ADC Conversion Rate/2)}$$

$$f = \frac{1}{(2\pi\sqrt{LC})}$$

$$L = \left(\frac{1}{(2\pi f\sqrt{C})}\right)^2$$

2.2.1 BULK CAPACITORS

On boards with power traces running longer than six inches in length, it is suggested to use a bulk capacitor for integrated circuits, including DSCs, to supply a local power source. The value of the bulk capacitor should be determined based on the trace resistance that connects the power supply source to the device and the maximum current drawn by the device in the application. In other words, select the bulk capacitor so that it meets the acceptable voltage sag at the device. Typical values range from 4.7 µF to 47 µF.

2.3 Master Clear ($\overline{\text{MCLR}}$) Pin

The $\overline{\text{MCLR}}$ pin provides two specific device functions:

- Device Reset
- Device Programming and Debugging.

During device programming and debugging, the resistance and capacitance that can be added to the pin must be considered. Device programmers and debuggers drive the $\overline{\text{MCLR}}$ pin. Consequently, specific voltage levels (VIH and VIL) and fast signal transitions must not be adversely affected. Therefore, specific values of R and C will need to be adjusted based on the application and PCB requirements.

For example, as shown in Figure 2-2, it is recommended that the capacitor, C, be isolated from the $\overline{\text{MCLR}}$ pin during programming and debugging operations.

Place the components, as shown in Figure 2-2, within one-quarter inch (6 mm) from the $\overline{\text{MCLR}}$ pin.

Note 1: There are the $\overline{\text{S1MCLR1}}$, $\overline{\text{S1MCLR2}}$ and $\overline{\text{S1MCLR3}}$ pins and they are used for Slave debug during the dual debug process. Those pins do not reset the Slave core during normal operation.

FIGURE 2-2: EXAMPLE OF $\overline{\text{MCLR}}$ PIN CONNECTIONS

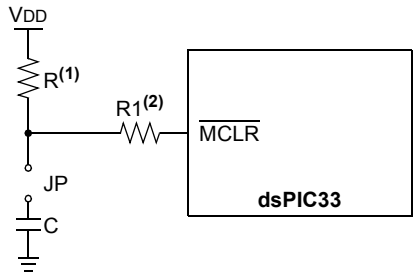

Note 1: R ≤ 10 kΩ is recommended. A suggested starting value is 10 kΩ. Ensure that the $\overline{\text{MCLR}}$ pin VIH and VIL specifications are met.

2: R1 ≤ 470Ω will limit any current flowing into $\overline{\text{MCLR}}$ from the external capacitor, C, in the event of $\overline{\text{MCLR}}$ pin breakdown due to Electrostatic Discharge (ESD) or Electrical Overstress (EOS). Ensure that the $\overline{\text{MCLR}}$ pin VIH and VIL specifications are met.

© 2017-2018 Microchip Technology Inc.

2.4 ICSP Pins

The PGCx and PGDx pins are used for ICSP and debugging purposes. It is recommended to keep the trace length between the ICSP connector and the ICSP pins on the device as short as possible. If the ICSP connector is expected to experience an ESD event, a series resistor is recommended, with the value in the range of a few tens of Ohms, not to exceed 100 Ohms.

Pull-up resistors, series diodes and capacitors on the PGCx and PGDx pins are not recommended as they will interfere with the programmer/debugger communications to the device. If such discrete components are an application requirement, they should be removed from the circuit during programming and debugging. Alternatively, refer to the AC/DC characteristics and timing requirements information in the respective device Flash programming specification for information on capacitive loading limits and pin Voltage Input High (V_{IH}) and Voltage Input Low (V_{IL}) requirements.

Ensure that the "Communication Channel Select" (i.e., PGCx/PGDx pins) programmed into the device matches the physical connections for the ICSP to PICkit™ 3, MPLAB® ICD 3 or MPLAB REAL ICE™ emulator.

For more information on MPLAB ICD 2, MPLAB ICD 3 and REAL ICE emulator connection requirements, refer to the following documents that are available on the Microchip web site.

- *"Using MPLAB® ICD 3 In-Circuit Debugger"* (poster) (DS51765)
- *"Development Tools Design Advisory"* (DS51764)
- *"MPLAB® REAL ICE™ In-Circuit Emulator User's Guide"* (DS51616)
- *"Using MPLAB® REAL ICE™ In-Circuit Emulator"* (poster) (DS51749)

2.5 External Oscillator Pins

Many DSCs have options for at least two oscillators: a high-frequency Primary Oscillator (POSC) and a low-frequency Secondary Oscillator (SOSC). For details, see **Section 6.4.1 "Master Oscillator Control Registers"**.

The oscillator circuit should be placed on the same side of the board as the device. Also, place the oscillator circuit close to the respective oscillator pins, not exceeding one-half inch (12 mm) distance between them. The load capacitors should be placed next to the oscillator itself, on the same side of the board. Use a grounded copper pour around the oscillator circuit to isolate them from surrounding circuits. The grounded copper pour should be routed directly to the MCU ground. Do not run any signal traces or power traces inside the ground pour. Also, if using a two-sided board, avoid any traces on the other side of the board where the crystal is placed. A suggested layout is shown in Figure 2-3.

FIGURE 2-3: SUGGESTED PLACEMENT OF THE OSCILLATOR CIRCUIT

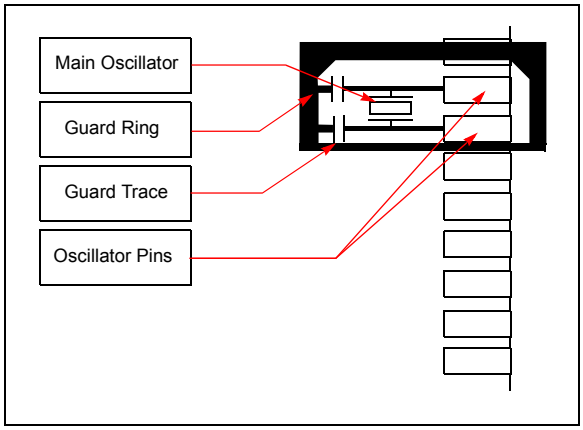

2.6 Oscillator Value Conditions on Device Start-up

If the PLL of the target device is enabled and configured for the device start-up oscillator, the maximum oscillator source frequency must be limited to a certain frequency (see **Section 6.0 "Oscillator with High-Frequency PLL"**) to comply with device PLL start-up conditions. This means that if the external oscillator frequency is outside this range, the application must start up in the FRC mode first. The default PLL settings after a POR with an oscillator frequency outside this range will violate the device operating speed.

Once the device powers up, the application firmware can initialize the PLL SFRs, CLKDIV and PLLFBD, to a suitable value, and then perform a clock switch to the Oscillator + PLL clock source. Note that clock switching must be enabled in the device Configuration Word.

2.7 Unused I/Os

Unused I/O pins should be configured as outputs and driven to a logic low state.

Alternatively, connect a 1k to 10k resistor between VSS and unused pins, and drive the output to logic low.

2.8 Targeted Applications

- Power Factor Correction (PFC):
  - Interleaved PFC
  - Critical Conduction PFC
  - Bridgeless PFC
- DC/DC Converters:
  - Buck, Boost, Forward, Flyback, Push-Pull
  - Half/Full-Bridge
  - Phase-Shift Full-Bridge
  - Resonant Converters
- DC/AC:
  - Half/Full-Bridge Inverter
  - Resonant Inverter
- Motor Control
  - BLDC
  - PMSM
  - SR
  - ACIM

Examples of typical application connections are shown in Figure 2-4 through Figure 2-6.

FIGURE 2-4: INTERLEAVED PFC

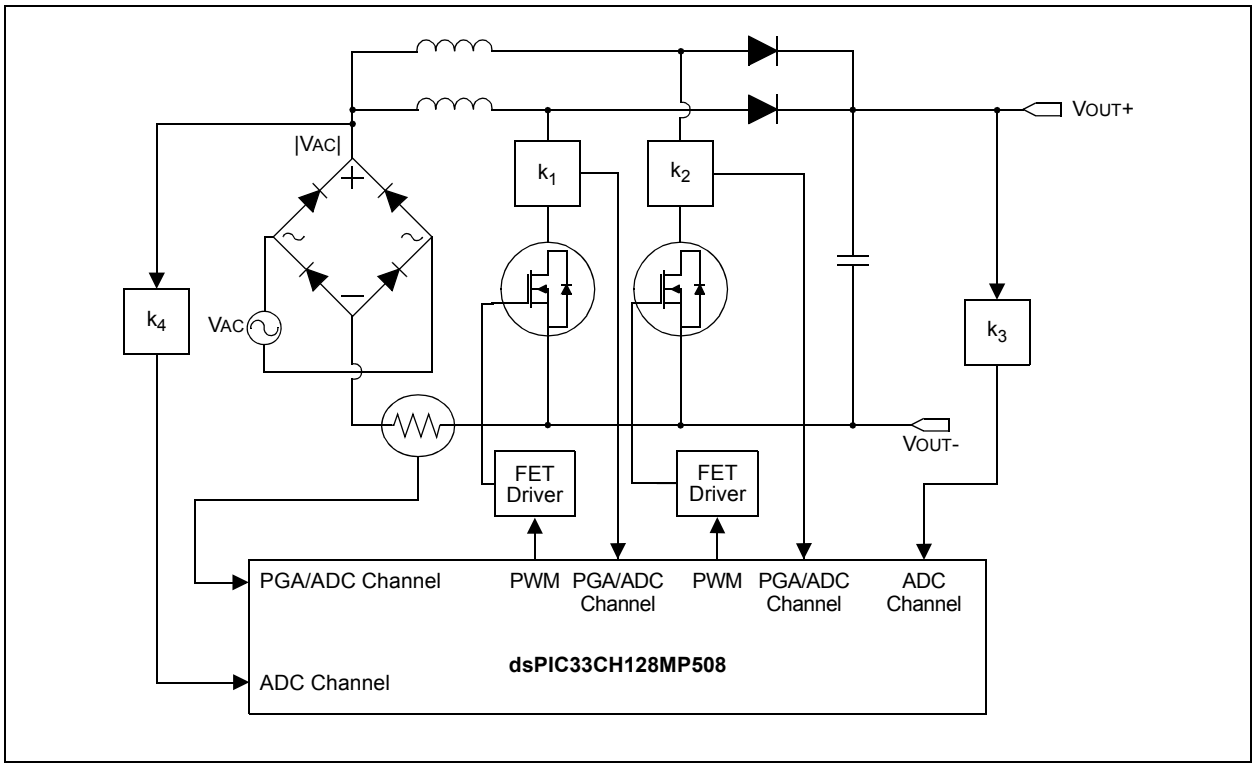

© 2017-2018 Microchip Technology Inc.

FIGURE 2-5: PHASE-SHIFTED FULL-BRIDGE CONVERTER

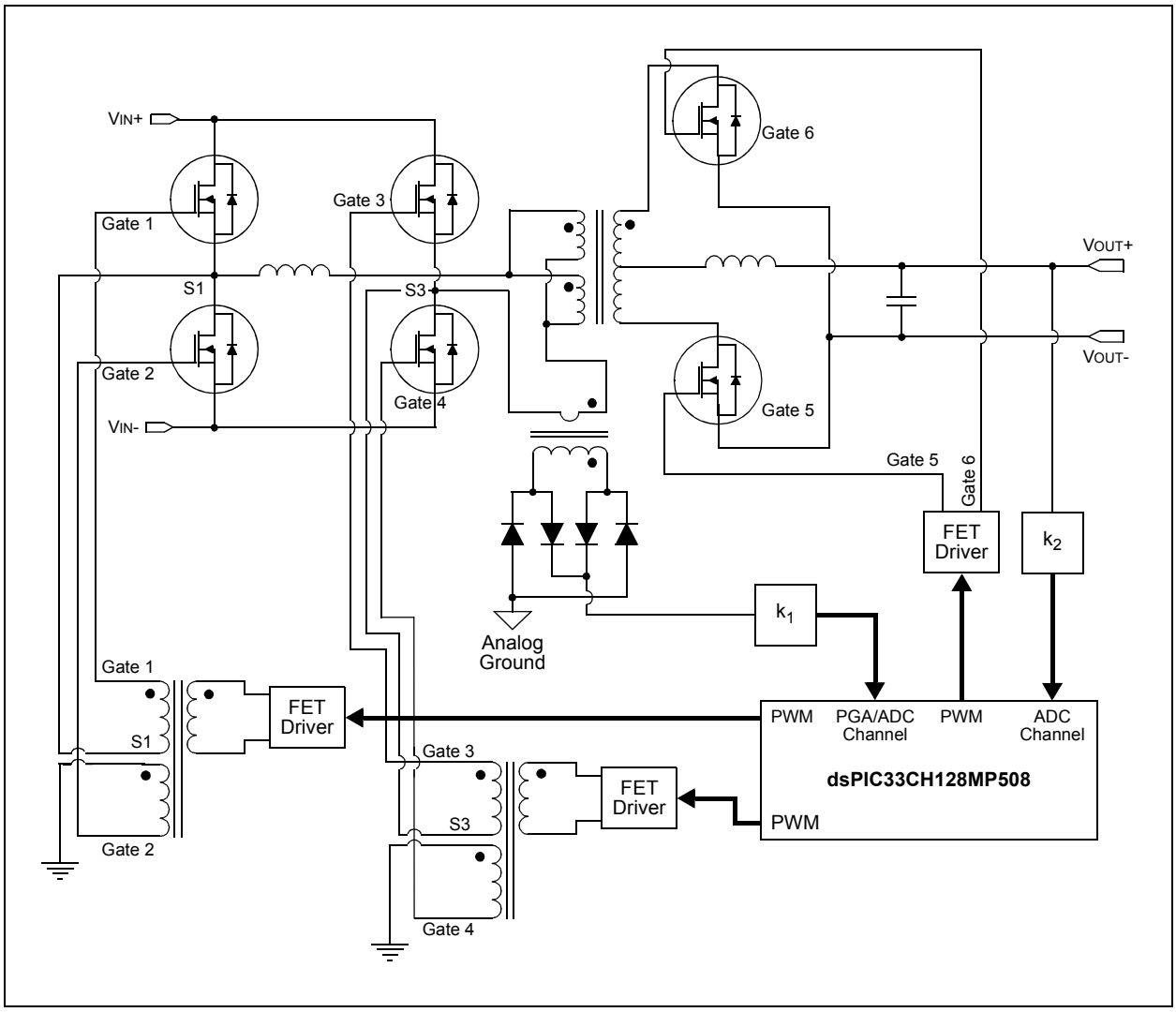

FIGURE 2-6: OFF-LINE UPS

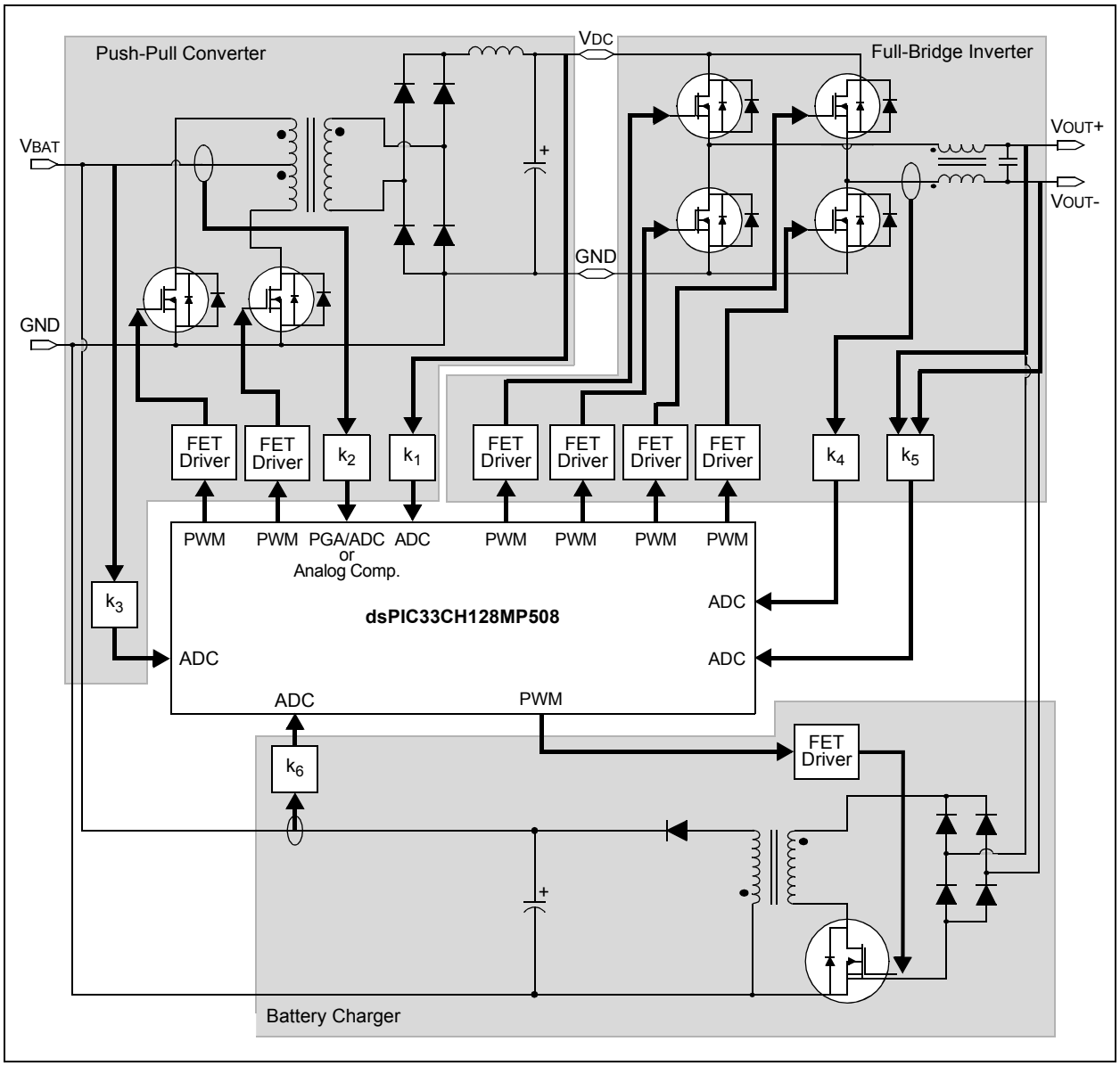

© 2017-2018 Microchip Technology Inc.

3.0 MASTER MODULES

3.1 Master CPU

Note 1:	This data sheet summarizes the features of the dsPIC33CH128MP508 family of devices. It is not intended to be a comprehensive reference source. To complement the information in this data sheet, refer to **"dsPIC33E Enhanced CPU"** (DS70005158) in the *"dsPIC33/PIC24 Family Reference Manual"*, which is available from the Microchip web site (www.microchip.com).

There are two independent CPU cores in the dsPIC33CH128MP508 family. The Master and Slave cores are similar, except for the fact that the Slave core can run at a higher speed than the Master core.

The Slave core fetches instructions from the PRAM and the Master core fetches the code from the Flash. The Master and Slave cores can run independently asynchronously, at the same speed or at a different speed. This section discusses the Master core.

Note:	All of the associated register names are the same on the Master, as well as on the Slave. The Slave code will be developed in a separate project in MPLAB® X IDE with the device selection, dsPIC33CH128MP508**S1**, where the **S1** indicates the Slave device.

The dsPIC33CH128MP508 family CPU has a 16-bit (data) modified Harvard architecture with an enhanced instruction set, including significant support for Digital Signal Processing (DSP). The CPU has a 24-bit instruction word with a variable length opcode field. The Program Counter (PC) is 23 bits wide and addresses up to 4M x 24 bits of user program memory space.

An instruction prefetch mechanism helps maintain throughput and provides predictable execution. Most instructions execute in a single-cycle effective execution rate, with the exception of instructions that change the program flow, the double-word move (`MOV.D`) instruction, PSV accesses and the table instructions. Overhead-free program loop constructs are supported using the `DO` and `REPEAT` instructions, both of which are interruptible at any point.

3.1.1 REGISTERS

The dsPIC33CH128MP508 devices have sixteen, 16-bit Working registers in the programmer's model. Each of the Working registers can act as a Data, Address or Address Offset register. The 16th Working register (W15) operates as a Software Stack Pointer for interrupts and calls.

In addition, the dsPIC33CH128MP508 devices include four Alternate Working register sets, which consist of W0 through W14. The Alternate Working registers can be made persistent to help reduce the saving and restoring of register content during Interrupt Service Routines (ISRs). The Alternate Working registers can be assigned to a specific Interrupt Priority Level (IPL1 through IPL7) by configuring the CTXTx<2:0> bits in the FALTREG Configuration register. The Alternate Working registers can also be accessed manually by using the `CTXTSWP` instruction. The CCTXI<2:0> and MCTXI<2:0> bits in the CTXTSTAT register can be used to identify the current, and most recent, manually selected Working register sets.

3.1.2 INSTRUCTION SET

The instruction set for dsPIC33CH128MP508 devices has two classes of instructions: the MCU class of instructions and the DSP class of instructions. These two instruction classes are seamlessly integrated into the architecture and execute from a single execution unit. The instruction set includes many addressing modes and was designed for optimum C compiler efficiency.

3.1.3 DATA SPACE ADDRESSING

The base Data Space (DS) can be addressed as up to 4K words or 8 Kbytes, and is split into two blocks, referred to as X and Y data memory. Each memory block has its own independent Address Generation Unit (AGU). The MCU class of instructions operates solely through the X memory AGU, which accesses the entire memory map as one linear Data Space. Certain DSP instructions operate through the X and Y AGUs to support dual operand reads, which splits the data address space into two parts. The X and Y Data Space boundary is device-specific.

The upper 32 Kbytes of the Data Space memory map can optionally be mapped into Program Space (PS) at any 16K program word boundary. The program-to-Data Space mapping feature, known as Program Space Visibility (PSV), lets any instruction access Program Space as if it were Data Space. Refer to **"Data Memory"** (DS70595) in the *"dsPIC33/PIC24 Family Reference Manual"* for more details on PSV and table accesses.

On dsPIC33CH128MP508 family devices, overhead-free circular buffers (Modulo Addressing) are supported in both X and Y address spaces. The Modulo Addressing removes the software boundary checking overhead for DSP algorithms. The X AGU Circular Addressing can be used with any of the MCU class of instructions. The X AGU also supports Bit-Reversed Addressing to greatly simplify input or output data re-ordering for radix-2 FFT algorithms.

3.1.4 ADDRESSING MODES

The CPU supports these addressing modes:

- Inherent (no operand)
- Relative
- Literal
- Memory Direct
- Register Direct
- Register Indirect

Each instruction is associated with a predefined addressing mode group, depending upon its functional requirements. As many as six addressing modes are supported for each instruction.

© 2017-2018 Microchip Technology Inc.

FIGURE 3-1: dsPIC33CH128MP508 FAMILY (MASTER) CPU BLOCK DIAGRAM

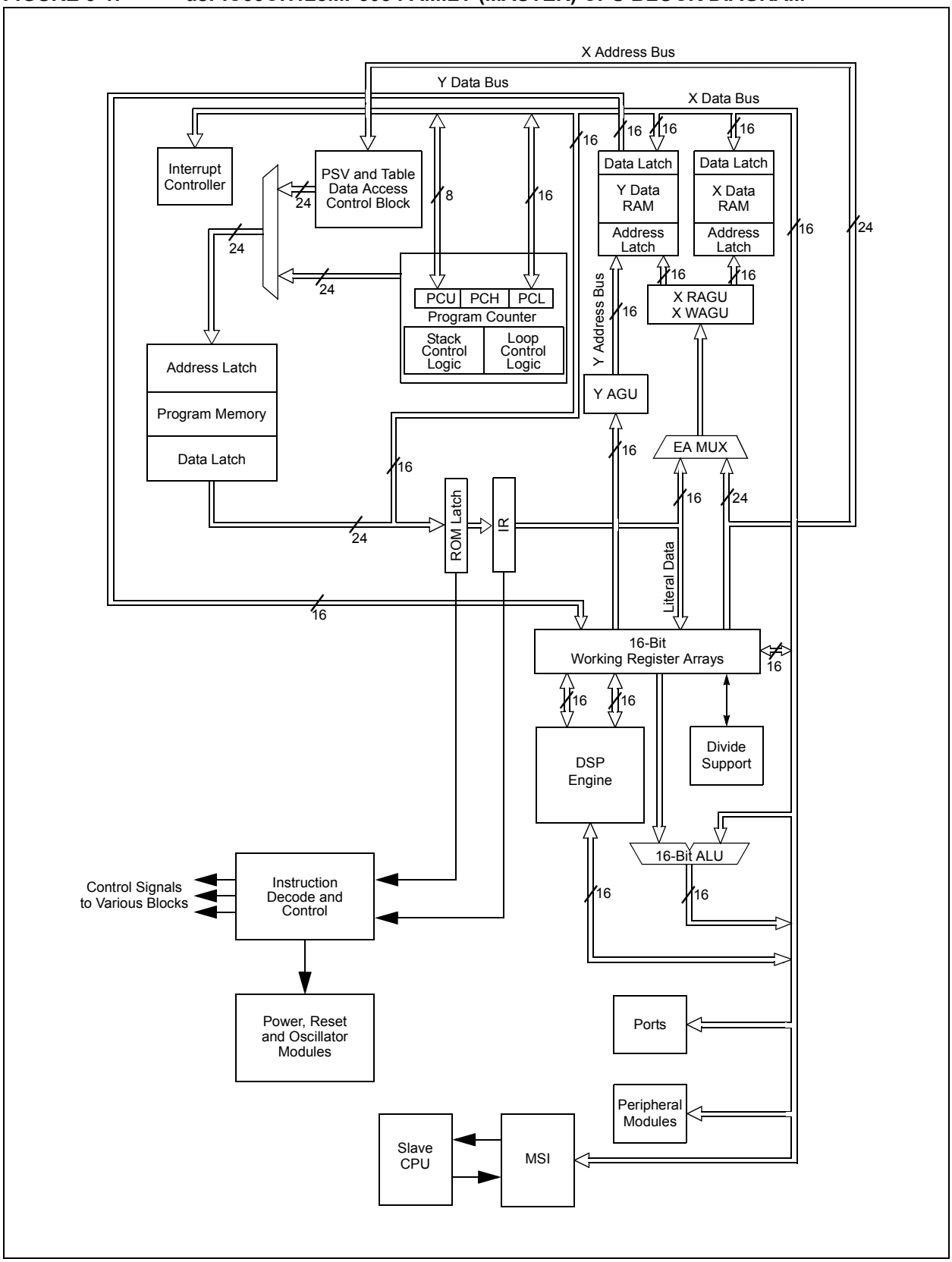

3.1.5 PROGRAMMER'S MODEL

The programmer's model for the dsPIC33CH128MP508 family is shown in Figure 3-2. All registers in the programmer's model are memory-mapped and can be manipulated directly by instructions. Table 3-1 lists a description of each register.

In addition to the registers contained in the programmer's model, the dsPIC33CH128MP508 devices contain control registers for Modulo Addressing, Bit-Reversed Addressing and interrupts. These registers are described in subsequent sections of this document.

All registers associated with the programmer's model are memory-mapped, as shown in Figure 3-3 and Figure 3-4.

TABLE 3-1: PROGRAMMER'S MODEL REGISTER DESCRIPTIONS

Register(s) Name	Description
W0 through W15(1)	Working Register Array
W0 through W14(1)	Alternate Working Register Array 1
W0 through W14(1)	Alternate Working Register Array 2
W0 through W14(1)	Alternate Working Register Array 3
W0 through W14(1)	Alternate Working Register Array 4
ACCA, ACCB	40-Bit DSP Accumulators (Additional 4 Alternate Accumulators)
PC	23-Bit Program Counter
SR	ALU and DSP Engine STATUS Register
SPLIM	Stack Pointer Limit Value Register
TBLPAG	Table Memory Page Address Register
DSRPAG	Extended Data Space (EDS) Read Page Register
RCOUNT	REPEAT Loop Counter Register
DCOUNT	DO Loop Counter Register
DOSTARTH, DOSTARTL(2)	DO Loop Start Address Register (High and Low)
DOENDH, DOENDL	DO Loop End Address Register (High and Low)
CORCON	Contains DSP Engine, DO Loop Control and Trap Status bits

Note 1: Memory-mapped W0 through W14 represent the value of the register in the currently active CPU context.

2: The DOSTARTH and DOSTARTL registers are read-only.

© 2017-2018 Microchip Technology Inc.

FIGURE 3-2: PROGRAMMER'S MODEL (MASTER)

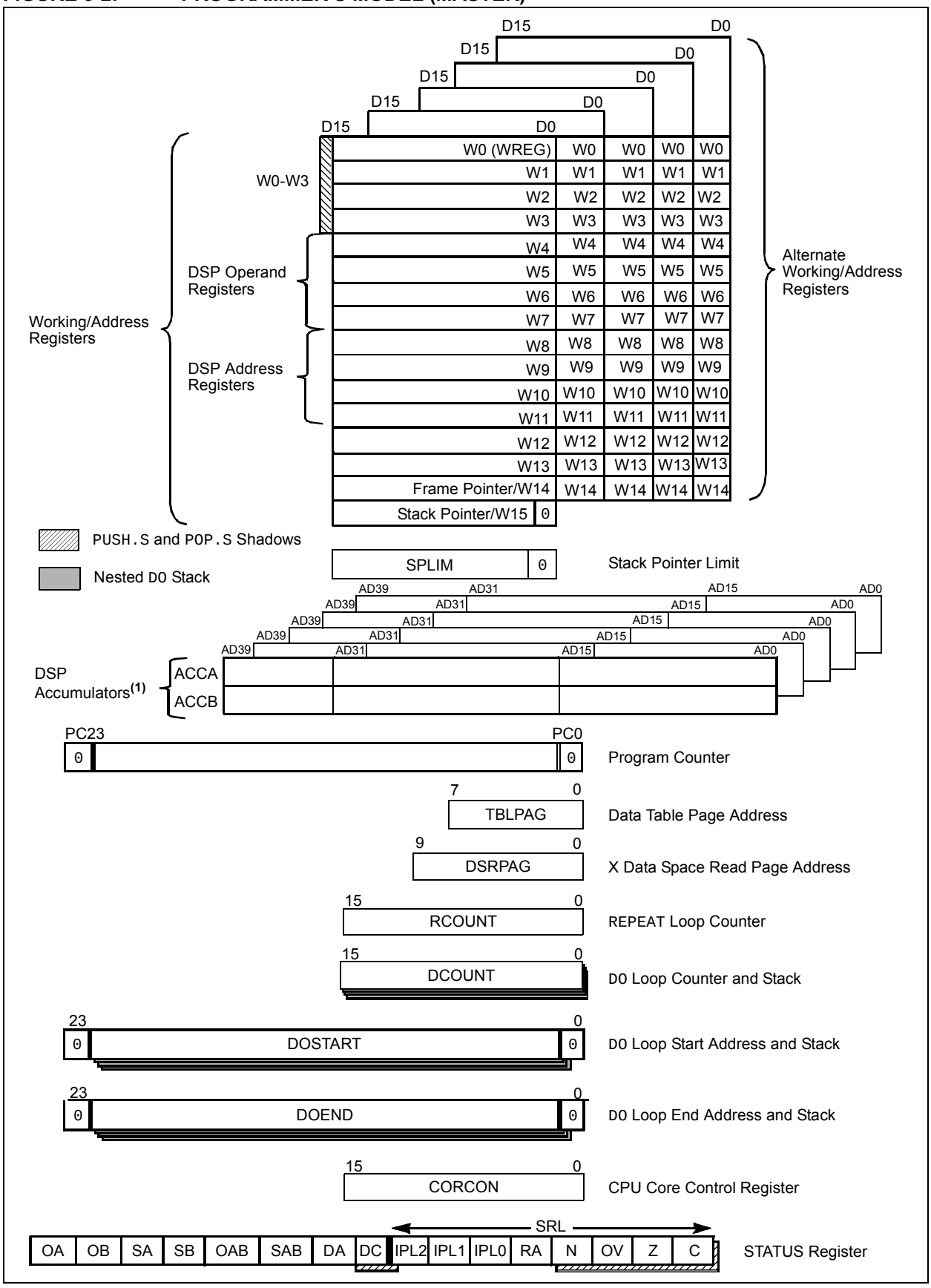

3.1.6 CPU RESOURCES

Many useful resources are provided on the main product page of the Microchip web site for the devices listed in this data sheet. This product page contains the latest updates and additional information.

3.1.6.1 Key Resources

- **"dsPIC33E Enhanced CPU"** (DS70005158) in the *"dsPIC33/PIC24 Family Reference Manual"*
- Code Samples
- Application Notes
- Software Libraries
- Webinars
- All related *"dsPIC33/PIC24 Family Reference Manual"* Sections
- Development Tools

© 2017-2018 Microchip Technology Inc.

3.1.7 CPU CONTROL/STATUS REGISTERS

REGISTER 3-1: SR: CPU STATUS REGISTER

R/W-0	R/W-0	R/W-0	R/W-0	R/C-0	R/C-0	R-0	R/W-0
OA	OB	SA(3)	SB(3)	OAB	SAB	DA	DC
bit 15							bit 8

R/W-0(2)	R/W-0(2)	R/W-0(2)	R-0	R/W-0	R/W-0	R/W-0	R/W-0
IPL2(1)	IPL1(1)	IPL0(1)	RA	N	OV	Z	C
bit 7							bit 0

Legend:	C = Clearable bit		
R = Readable bit	W = Writable bit	U = Unimplemented bit, read as ‘0’	
-n = Value at POR	‘1’= Bit is set	‘0’ = Bit is cleared	x = Bit is unknown

bit 15 **OA:** Accumulator A Overflow Status bit
`1` = Accumulator A has overflowed
`0` = Accumulator A has not overflowed

bit 14 **OB:** Accumulator B Overflow Status bit
`1` = Accumulator B has overflowed
`0` = Accumulator B has not overflowed

bit 13 **SA:** Accumulator A Saturation ‘Sticky’ Status bit(3)
`1` = Accumulator A is saturated or has been saturated at some time
`0` = Accumulator A is not saturated

bit 12 **SB:** Accumulator B Saturation ‘Sticky’ Status bit(3)
`1` = Accumulator B is saturated or has been saturated at some time
`0` = Accumulator B is not saturated

bit 11 **OAB:** OA || OB Combined Accumulator Overflow Status bit
`1` = Accumulator A or B has overflowed
`0` = Neither Accumulator A or B has overflowed

bit 10 **SAB:** SA || SB Combined Accumulator ‘Sticky’ Status bit
`1` = Accumulator A or B is saturated or has been saturated at some time
`0` = Neither Accumulator A or B is saturated

bit 9 **DA:** `DO` Loop Active bit
`1` = `DO` loop is in progress
`0` = `DO` loop is not in progress

bit 8 **DC:** MCU ALU Half Carry/$\overline{\text{Borrow}}$ bit
`1` = A carry-out from the 4th low-order bit (for byte-sized data) or 8th low-order bit (for word-sized data) of the result occurred
`0` = No carry-out from the 4th low-order bit (for byte-sized data) or 8th low-order bit (for word-sized data) of the result occurred

Note 1: The IPL<2:0> bits are concatenated with the IPL<3> bit (CORCON<3>) to form the CPU Interrupt Priority Level. The value in parentheses indicates the IPL, if IPL<3> = `1`. User interrupts are disabled when IPL<3> = `1`.

2: The IPL<2:0> Status bits are read-only when the NSTDIS bit (INTCON1<15>) = `1`.

3: A data write to the SR register can modify the SA and SB bits by either a data write to SA and SB or by clearing the SAB bit. To avoid a possible SA or SB bit write race condition, the SA and SB bits should not be modified using bit operations.

REGISTER 3-1: SR: CPU STATUS REGISTER (CONTINUED)

bit 7-5 **IPL<2:0>:** CPU Interrupt Priority Level Status bits(1,2)

111 = CPU Interrupt Priority Level is 7 (15); user interrupts are disabled
110 = CPU Interrupt Priority Level is 6 (14)
101 = CPU Interrupt Priority Level is 5 (13)
100 = CPU Interrupt Priority Level is 4 (12)
011 = CPU Interrupt Priority Level is 3 (11)
010 = CPU Interrupt Priority Level is 2 (10)
001 = CPU Interrupt Priority Level is 1 (9)
000 = CPU Interrupt Priority Level is 0 (8)

bit 4 **RA:** REPEAT Loop Active bit

1 = REPEAT loop is in progress
0 = REPEAT loop is not in progress

bit 3 **N:** MCU ALU Negative bit

1 = Result was negative
0 = Result was non-negative (zero or positive)

bit 2 **OV:** MCU ALU Overflow bit

This bit is used for signed arithmetic (2's complement). It indicates an overflow of the magnitude that causes the sign bit to change state.
1 = Overflow occurred for signed arithmetic (in this arithmetic operation)
0 = No overflow occurred

bit 1 **Z:** MCU ALU Zero bit

1 = An operation that affects the Z bit has set it at some time in the past
0 = The most recent operation that affects the Z bit has cleared it (i.e., a non-zero result)

bit 0 **C:** MCU ALU Carry/$\overline{\text{Borrow}}$ bit

1 = A carry-out from the Most Significant bit of the result occurred
0 = No carry-out from the Most Significant bit of the result occurred

Note 1: The IPL<2:0> bits are concatenated with the IPL<3> bit (CORCON<3>) to form the CPU Interrupt Priority Level. The value in parentheses indicates the IPL, if IPL<3> = 1. User interrupts are disabled when IPL<3> = 1.

2: The IPL<2:0> Status bits are read-only when the NSTDIS bit (INTCON1<15>) = 1.

3: A data write to the SR register can modify the SA and SB bits by either a data write to SA and SB or by clearing the SAB bit. To avoid a possible SA or SB bit write race condition, the SA and SB bits should not be modified using bit operations.

© 2017-2018 Microchip Technology Inc.

REGISTER 3-2: CORCON: CORE CONTROL REGISTER

R/W-0	U-0	R/W-0	R/W-0	R/W-0	R-0	R-0	R-0
VAR	—	US1	US0	EDT(1)	DL2	DL1	DL0
bit 15							bit 8

R/W-0	R/W-0	R/W-1	R/W-0	R/C-0	R-0	R/W-0	R/W-0
SATA	SATB	SATDW	ACCSAT	IPL3(2)	SFA	RND	IF
bit 7							bit 0

Legend:	C = Clearable bit		
R = Readable bit	W = Writable bit	U = Unimplemented bit, read as ‘0’	
-n = Value at POR	‘1’ = Bit is set	‘0’ = Bit is cleared	x = Bit is unknown

bit 15 **VAR:** Variable Exception Processing Latency Control bit
1 = Variable exception processing is enabled
0 = Fixed exception processing is enabled

bit 14 **Unimplemented:** Read as ‘0’

bit 13-12 **US<1:0>:** DSP Multiply Unsigned/Signed Control bits
11 = Reserved
10 = DSP engine multiplies are mixed sign
01 = DSP engine multiplies are unsigned
00 = DSP engine multiplies are signed

bit 11 **EDT:** Early DO Loop Termination Control bit(1)
1 = Terminates executing DO loop at the end of the current loop iteration
0 = No effect

bit 10-8 **DL<2:0>:** DO Loop Nesting Level Status bits
111 = Seven DO loops are active
...
001 = One DO loop is active
000 = Zero DO loops are active

bit 7 **SATA:** ACCA Saturation Enable bit
1 = Accumulator A saturation is enabled
0 = Accumulator A saturation is disabled

bit 6 **SATB:** ACCB Saturation Enable bit
1 = Accumulator B saturation is enabled
0 = Accumulator B saturation is disabled

bit 5 **SATDW:** Data Space Write from DSP Engine Saturation Enable bit
1 = Data Space write saturation is enabled
0 = Data Space write saturation is disabled

bit 4 **ACCSAT:** Accumulator Saturation Mode Select bit
1 = 9.31 saturation (super saturation)
0 = 1.31 saturation (normal saturation)

bit 3 **IPL3:** CPU Interrupt Priority Level Status bit 3(2)
1 = CPU Interrupt Priority Level is greater than 7
0 = CPU Interrupt Priority Level is 7 or less

Note 1: This bit is always read as ‘0’.
2: The IPL3 bit is concatenated with the IPL<2:0> bits (SR<7:5>) to form the CPU Interrupt Priority Level.

REGISTER 3-2: CORCON: CORE CONTROL REGISTER (CONTINUED)

bit 2 **SFA:** Stack Frame Active Status bit
1 = Stack frame is active; W14 and W15 address 0x0000 to 0xFFFF, regardless of DSRPAG
0 = Stack frame is not active; W14 and W15 address the base Data Space

bit 1 **RND:** Rounding Mode Select bit
1 = Biased (conventional) rounding is enabled
0 = Unbiased (convergent) rounding is enabled

bit 0 **IF:** Integer or Fractional Multiplier Mode Select bit
1 = Integer mode is enabled for DSP multiply
0 = Fractional mode is enabled for DSP multiply

Note 1: This bit is always read as '0'.
2: The IPL3 bit is concatenated with the IPL<2:0> bits (SR<7:5>) to form the CPU Interrupt Priority Level.

REGISTER 3-3: CTXTSTAT: CPU W REGISTER CONTEXT STATUS REGISTER

U-0	U-0	U-0	U-0	U-0	R-0	R-0	R-0
—	—	—	—	—	CCTXI2	CCTXI1	CCTXI0
bit 15							bit 8

U-0	U-0	U-0	U-0	U-0	R-0	R-0	R-0
—	—	—	—	—	MCTXI2	MCTXI1	MCTXI0
bit 7							bit 0

Legend:			
R = Readable bit	W = Writable bit	U = Unimplemented bit, read as '0'	
-n = Value at POR	'1' = Bit is set	'0' = Bit is cleared	x = Bit is unknown

bit 15-11 **Unimplemented:** Read as '0'

bit 10-8 **CCTXI<2:0>:** Current (W Register) Context Identifier bits
111 = Reserved
•
•
•
100 = Alternate Working Register Set 4 is currently in use
011 = Alternate Working Register Set 3 is currently in use
010 = Alternate Working Register Set 2 is currently in use
001 = Alternate Working Register Set 1 is currently in use
000 = Default register set is currently in use

bit 7-3 **Unimplemented:** Read as '0'

bit 2-0 **MCTXI<2:0>:** Manual (W Register) Context Identifier bits
111 = Reserved
•
•
•
100 = Alternate Working Register Set 4 was most recently manually selected
011 = Alternate Working Register Set 3 was most recently manually selected
010 = Alternate Working Register Set 2 was most recently manually selected
001 = Alternate Working Register Set 1 was most recently manually selected
000 = Default register set was most recently manually selected

© 2017-2018 Microchip Technology Inc.

3.1.8 ARITHMETIC LOGIC UNIT (ALU)

The dsPIC33CH128MP508 family ALU is 16 bits wide and is capable of addition, subtraction, bit shifts and logic operations. Unless otherwise mentioned, arithmetic operations are two's complement in nature. Depending on the operation, the ALU can affect the values of the Carry (C), Zero (Z), Negative (N), Overflow (OV) and Digit Carry (DC) Status bits in the SR register. The C and DC Status bits operate as Borrow and Digit Borrow bits, respectively, for subtraction operations.

The ALU can perform 8-bit or 16-bit operations, depending on the mode of the instruction that is used. Data for the ALU operation can come from the W register array or data memory, depending on the addressing mode of the instruction. Likewise, output data from the ALU can be written to the W register array or a data memory location.

Refer to the *"16-Bit MCU and DSC Programmer's Reference Manual"* (DS70000157) for information on the SR bits affected by each instruction.

The core CPU incorporates hardware support for both multiplication and division. This includes a dedicated hardware multiplier and support hardware for 16-bit divisor division.

3.1.8.1 Multiplier

Using the high-speed, 17-bit x 17-bit multiplier, the ALU supports unsigned, signed or mixed-sign operation in several MCU multiplication modes:

- 16-bit x 16-bit signed
- 16-bit x 16-bit unsigned
- 16-bit signed x 5-bit (literal) unsigned
- 16-bit signed x 16-bit unsigned
- 16-bit unsigned x 5-bit (literal) unsigned
- 16-bit unsigned x 16-bit signed
- 8-bit unsigned x 8-bit unsigned

3.1.8.2 Divider

The divide block supports 32-bit/16-bit and 16-bit/16-bit signed and unsigned integer divide operations with the following data sizes:

- 32-bit signed/16-bit signed divide
- 32-bit unsigned/16-bit unsigned divide
- 16-bit signed/16-bit signed divide
- 16-bit unsigned/16-bit unsigned divide

The 16-bit signed and unsigned `DIV` instructions can specify any W register for both the 16-bit divisor (Wn) and any W register (aligned) pair (W(m + 1):Wm) for the 32-bit dividend. The divide algorithm takes one cycle per bit of divisor, so both 32-bit/16-bit and 16-bit/16-bit instructions take the same number of cycles to execute. There are additional instructions: `DIV2` and `DIVF2`. Divide instructions will complete in six cycles.

3.1.9 DSP ENGINE

The DSP engine consists of a high-speed 17-bit x 17-bit multiplier, a 40-bit barrel shifter and a 40-bit adder/subtracter (with two target accumulators, round and saturation logic).

The DSP engine can also perform inherent accumulator-to-accumulator operations that require no additional data. These instructions are, `ADD`, `SUB`, `NEG`, `MIN` and `MAX`.

The DSP engine has options selected through bits in the CPU Core Control register (CORCON), as listed below:

- Fractional or integer DSP multiply (IF)
- Signed, unsigned or mixed-sign DSP multiply (USx)
- Conventional or convergent rounding (RND)
- Automatic saturation on/off for ACCA (SATA)
- Automatic saturation on/off for ACCB (SATB)
- Automatic saturation on/off for writes to data memory (SATDW)
- Accumulator Saturation mode selection (ACCSAT)

TABLE 3-2: DSP INSTRUCTIONS SUMMARY

Instruction	Algebraic Operation	ACC Write-Back
`CLR`	$A = 0$	Yes
`ED`	$A = (x - y)^2$	No
`EDAC`	$A = A + (x - y)^2$	No
`MAC`	$A = A + (x \bullet y)$	Yes
`MAC`	$A = A + x^2$	No
`MOVSAC`	No change in A	Yes
`MPY`	$A = x \bullet y$	No
`MPY`	$A = x^2$	No
`MPY.N`	$A = -x \bullet y$	No
`MSC`	$A = A - x \bullet y$	Yes

3.2 Master Memory Organization

Note: This data sheet summarizes the features of the dsPIC33CH128MP508 family of devices. It is not intended to be a comprehensive reference source. To complement the information in this data sheet, refer to **"dsPIC33E/PIC24E Program Memory"** (DS70000613) in the *"dsPIC33/PIC24 Family Reference Manual"*, which is available from the Microchip web site (www.microchip.com).

The dsPIC33CH128MP508 family architecture features separate program and data memory spaces, and buses. This architecture also allows the direct access of program memory from the Data Space (DS) during code execution.

3.2.1 PROGRAM ADDRESS SPACE

The program address memory space of the dsPIC33CH128MP508 family devices is 4M instructions. The space is addressable by a 24-bit value derived either from the 23-bit PC during program execution, or from table operation or Data Space remapping, as described in **Section 3.2.9 "Interfacing Program and Data Memory Spaces"**.

User application access to the program memory space is restricted to the lower half of the address range (0x000000 to 0x7FFFFF). The exception is the use of TBLRD operations, which use TBLPAG<7> to permit access to calibration data and Device ID sections of the configuration memory space.

The program memory maps for the Master dsPIC33CHXXXMPX08 device are shown in Figure 3-3 and Figure 3-4.

FIGURE 3-3: PROGRAM MEMORY MAP FOR MASTER dsPIC33CH128MPXXX DEVICES(1)

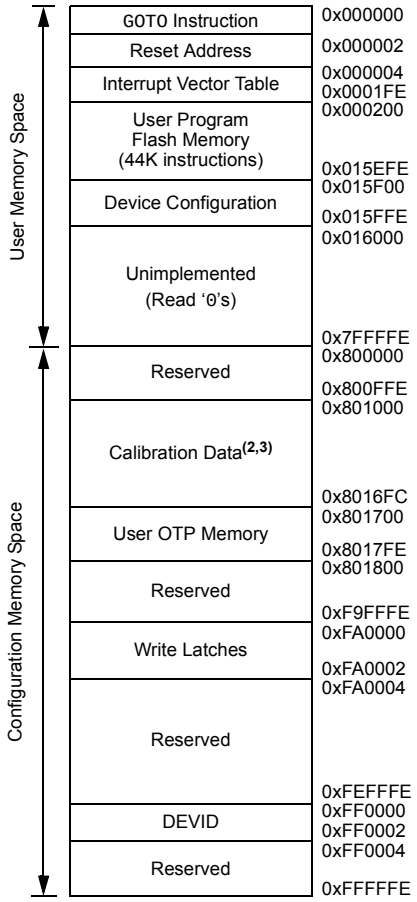

Note 1: Memory areas are not shown to scale.
2: Calibration data area must be maintained during programming.
3: Calibration data area includes UDID locations.

© 2017-2018 Microchip Technology Inc.

FIGURE 3-4: PROGRAM MEMORY MAP FOR MASTER dsPIC33CH64MPXXX DEVICES(1)

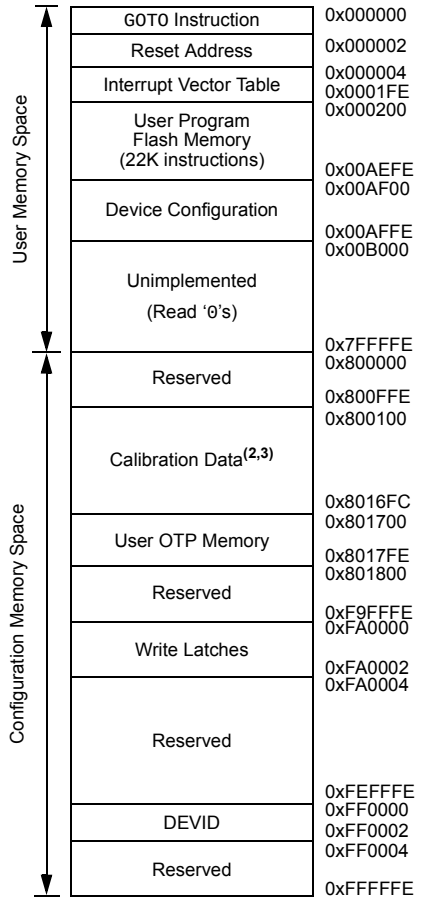

Note 1: Memory areas are not shown to scale.

2: Calibration data area must be maintained during programming.

3: Calibration data area includes UDID locations.

3.2.1.1 Program Memory Organization

The program memory space is organized in word-addressable blocks. Although it is treated as 24 bits wide, it is more appropriate to think of each address of the program memory as a lower and upper word, with the upper byte of the upper word being unimplemented. The lower word always has an even address, while the upper word has an odd address (Figure 3-5).

Program memory addresses are always word-aligned on the lower word, and addresses are incremented or decremented, by two, during code execution. This arrangement provides compatibility with data memory space addressing and makes data in the program memory space accessible.

3.2.1.2 Interrupt and Trap Vectors

All dsPIC33CH128MP508 family devices reserve the addresses between 0x000000 and 0x000200 for hard-coded program execution vectors. A hardware Reset vector is provided to redirect code execution from the default value of the PC on device Reset to the actual start of code. A `GOTO` instruction is programmed by the user application at address, 0x000000, of Flash memory, with the actual address for the start of code at address, 0x000002, of Flash memory.

A more detailed discussion of the Interrupt Vector Tables (IVTs) is provided in **Section 3.5 "Master Interrupt Controller"**.

FIGURE 3-5: PROGRAM MEMORY ORGANIZATION

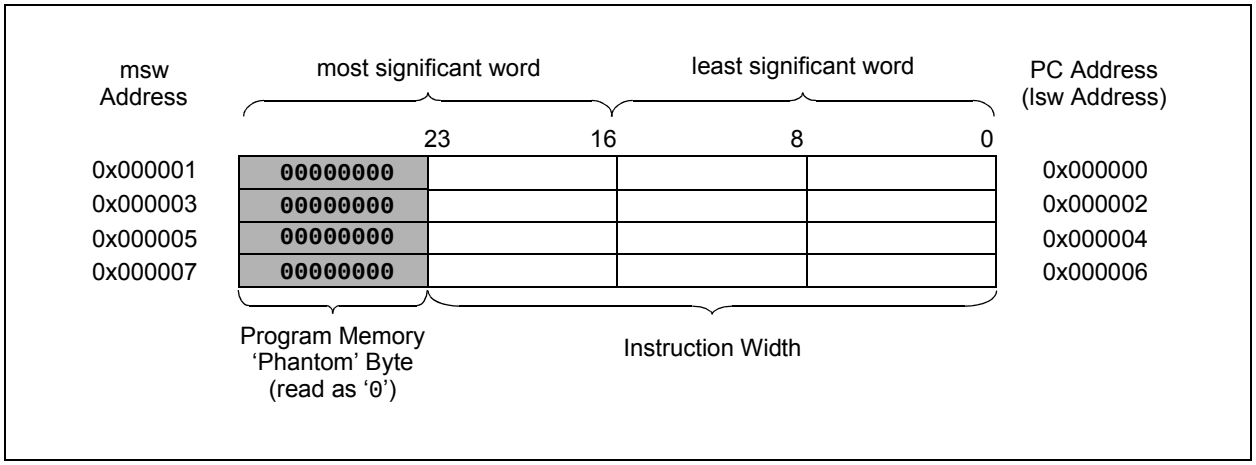

3.2.2 UNIQUE DEVICE IDENTIFIER (UDID)

All dsPIC33CH128MP508 family devices are individually encoded during final manufacturing with a Unique Device Identifier or UDID. The UDID cannot be erased by a bulk erase command or any other user-accessible means. This feature allows for manufacturing traceability of Microchip Technology devices in applications where this is a requirement. It may also be used by the application manufacturer for any number of things that may require unique identification, such as:

- Tracking the device
- Unique serial number
- Unique security key

The UDID comprises five 24-bit program words. When taken together, these fields form a unique 120-bit identifier.

The UDID is stored in five read-only locations, located between 0x801200 and 0x801208 in the device configuration space. Table 3-3 lists the addresses of the identifier words and shows their contents

TABLE 3-3: UDID ADDRESSES

UDID	Address	Description
UDID1	0x801200	UDID Word 1
UDID2	0x801202	UDID Word 2
UDID3	0x801204	UDID Word 3
UDID4	0x801206	UDID Word 4
UDID5	0x801208	UDID Word 5

© 2017-2018 Microchip Technology Inc.

3.2.3 DATA ADDRESS SPACE (MASTER)

The dsPIC33CH128MP508 family CPU has a separate 16-bit wide data memory space. The Data Space is accessed using separate Address Generation Units (AGUs) for read and write operations. The data memory map is shown in Figure 3-6.

All Effective Addresses (EAs) in the data memory space are 16 bits wide and point to bytes within the Data Space. This arrangement gives a base Data Space address range of 64 Kbytes or 32K words.

The lower half of the data memory space (i.e., when EA<15> = 0) is used for implemented memory addresses, while the upper half (EA<15> = 1) is reserved for the Program Space Visibility (PSV).

The dsPIC33CH128MP508 family devices implement up to 16 Kbytes of data memory. If an EA points to a location outside of this area, an all-zero word or byte is returned.

3.2.3.1 Data Space Width

The data memory space is organized in byte-addressable, 16-bit wide blocks. Data is aligned in data memory and registers as 16-bit words, but all Data Space EAs resolve to bytes. The Least Significant Bytes (LSBs) of each word have even addresses, while the Most Significant Bytes (MSBs) have odd addresses.

3.2.3.2 Data Memory Organization and Alignment

To maintain backward compatibility with PIC® MCU devices and improve Data Space memory usage efficiency, the dsPIC33CH128MP508 family instruction set supports both word and byte operations. As a consequence of byte accessibility, all Effective Address calculations are internally scaled to step through word-aligned memory. For example, the core recognizes that Post-Modified Register Indirect Addressing mode [Ws++] results in a value of Ws + 1 for byte operations and Ws + 2 for word operations.

A data byte read, reads the complete word that contains the byte, using the LSb of any EA to determine which byte to select. The selected byte is placed onto the LSB of the data path. That is, data memory and registers are organized as two parallel, byte-wide entities with shared (word) address decode, but separate write lines. Data byte writes only write to the corresponding side of the array or register that matches the byte address.

All word accesses must be aligned to an even address. Misaligned word data fetches are not supported, so care must be taken when mixing byte and word operations, or translating from 8-bit MCU code. If a misaligned read or write is attempted, an address error trap is generated. If the error occurred on a read, the instruction underway is completed. If the error occurred on a write, the instruction is executed but the write does not occur. In either case, a trap is then executed, allowing the system and/or user application to examine the machine state prior to execution of the address Fault.

All byte loads into any W register are loaded into the LSB; the MSB is not modified.

A Sign-Extend (SE) instruction is provided to allow user applications to translate 8-bit signed data to 16-bit signed values. Alternatively, for 16-bit unsigned data, user applications can clear the MSB of any W register by executing a Zero-Extend (ZE) instruction on the appropriate address.

3.2.3.3 SFR Space

The first 4 Kbytes of the Near Data Space, from 0x0000 to 0x0FFF, is primarily occupied by Special Function Registers (SFRs). These are used by the dsPIC33CH128MP508 family core and peripheral modules for controlling the operation of the device.

SFRs are distributed among the modules that they control and are generally grouped together by module. Much of the SFR space contains unused addresses; these are read as '0'.

Note:	The actual set of peripheral features and interrupts varies by the device. Refer to the corresponding device tables and pinout diagrams for device-specific information.

3.2.3.4 Near Data Space

The 8-Kbyte area, between 0x0000 and 0x1FFF, is referred to as the Near Data Space. Locations in this space are directly addressable through a 13-bit absolute address field within all memory direct instructions. Additionally, the whole Data Space is addressable using MOV instructions, which support Memory Direct Addressing mode with a 16-bit address field, or by using Indirect Addressing mode using a Working register as an Address Pointer.

FIGURE 3-6: DATA MEMORY MAP FOR dsPIC33CH128MP508 DEVICES

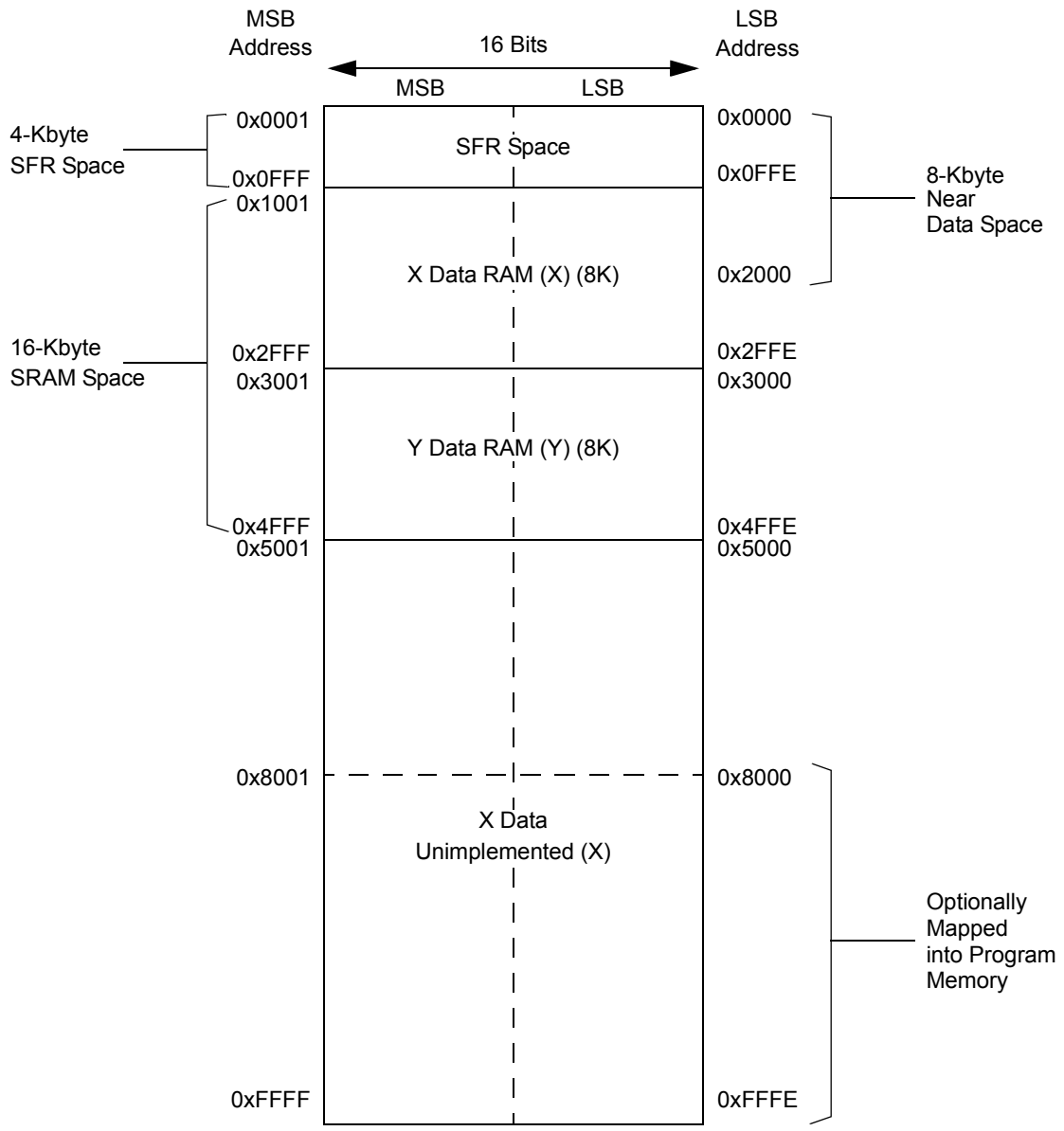

Note: Memory areas are not shown to scale.

© 2017-2018 Microchip Technology Inc.

3.2.3.5 X and Y Data Spaces

The dsPIC33CH128MP508 family core has two Data Spaces, X and Y. These Data Spaces can be considered either separate (for some DSP instructions) or as one unified linear address range (for MCU instructions). The Data Spaces are accessed using two Address Generation Units (AGUs) and separate data paths. This feature allows certain instructions to concurrently fetch two words from RAM, thereby enabling efficient execution of DSP algorithms, such as Finite Impulse Response (FIR) filtering and Fast Fourier Transform (FFT).

The X Data Space is used by all instructions and supports all addressing modes. X Data Space has separate read and write data buses. The X read data bus is the read data path for all instructions that view Data Space as combined X and Y address space. It is also the X data prefetch path for the dual operand DSP instructions (`MAC` class).

The Y Data Space is used in concert with the X Data Space by the `MAC` class of instructions (`CLR`, `ED`, `EDAC`, `MAC`, `MOVSAC`, `MPY`, `MPY.N` and `MSC`) to provide two concurrent data read paths.

Both the X and Y Data Spaces support Modulo Addressing mode for all instructions, subject to addressing mode restrictions. Bit-Reversed Addressing mode is only supported for writes to X Data Space.

All data memory writes, including in DSP instructions, view Data Space as combined X and Y address space. The boundary between the X and Y Data Spaces is device-dependent and is not user-programmable.

3.2.4 MEMORY RESOURCES

Many useful resources are provided on the main product page of the Microchip web site for the devices listed in this data sheet. This product page contains the latest updates and additional information.

3.2.4.1 Key Resources

- **"dsPIC33E Enhanced CPU"** (DS70005158) in the *"dsPIC33/PIC24 Family Reference Manual"*
- Code Samples
- Application Notes
- Software Libraries
- Webinars
- All Related *"dsPIC33/PIC24 Family Reference Manual"* Sections
- Development Tools

3.2.5 SFR MAPS

The following tables show dsPIC33CH128MP508 family Master SFR names, addresses and Reset values. These tables contain all registers applicable to the dsPIC33CH128MP508 family. Not all registers are present on all device variants. Refer to Table 1 and Table 2 for peripheral availability. Table 4-25 shows port availability for the different package options.

TABLE 3-4: MASTER SFR BLOCK 000h

Register	Address	All Resets	Register	Address	All Resets	Register	Address	All Resets
Core			MODCON	046	00--000000000000	**CRC**		
WREG0	000	0000000000000000	XMODSRT	048	xxxxxxxxxxxxxxx0	CRCCONL	0B0	0-000000010000--
WREG1	002	0000000000000000	XMODEND	04A	xxxxxxxxxxxxxxx1	CRCCONH	0B2	---00000---00000
WREG2	004	0000000000000000	YMODSRT	04C	xxxxxxxxxxxxxxx0	CRCXORL	0B4	000000000000000-
WREG3	006	0000000000000000	YMODEND	04E	xxxxxxxxxxxxxxx1	CRCXORH	0B6	0000000000000000
WREG4	008	0000000000000000	XBREV	050	0xxxxxxxxxxxxxxx	CRCDATL	0B8	0000000000000000
WREG5	00A	0000000000000000	DISICNT	052	xxxxxxxxxxxxxx00	CRCDATH	0BA	0000000000000000
WREG6	00C	0000000000000000	TBLPAG	054	--------00000000	CRCWDATL	0BC	0000000000000000
WREG7	00E	0000000000000000	YPAG	056	--------00000001	CRCWDATH	0BE	0000000000000000
WREG8	010	0000000000000000	MSTRPR	058	----------00---0	**CLC**		
WREG9	012	0000000000000000	CTXTSTAT	05A	0000000000000000	CLC1CONL	0C0	0-0-00--000--000
WREG10	014	0000000000000000	DMTCON	05C	0000000000000000	CLC1CONH	0C2	------------0000
WREG11	016	0000000000000000	DMTPRECLR	060	0000000000000000	CLC1SEL	0C4	-000-000-000-000
WREG12	018	0000000000000000	DMTCLR	064	0000000000000000	CLC1GLSL	0C8	0000000000000000
WREG13	01A	0000000000000000	DMTSTAT	068	0000000000000000	CLC1GLSH	0CA	0000000000000000
WREG14	01C	0000000000000000	DMTCNTL	06C	0000000000000000	CLC2CONL	0CC	0-0-00--000--000
WREG15	01E	0000100000000000	DMTCNTH	06E	0000000000000000	CLC2CONH	0CE	------------0000
SPLIM	020	xxxxxxxxxxxxxxxx	DMTHOLDREG	070	0000000000000000	CLC2SEL	0D0	-000-000-000-000
ACCAL	022	xxxxxxxxxxxxxxxx	DMTPSCNTL	074	0000000000000000	CLC2GLSL	0D4	0000000000000000
ACCAH	024	xxxxxxxxxxxxxxxx	DMTPSCNTH	076	0000000000000000	CLC2GLSH	0D6	0000000000000000
ACCAU	026	xxxxxxxxxxxxxxxx	DMTPSINTVL	078	0000000000000000	CLC3CONL	0D8	0-0-00--000--000
ACCBL	028	xxxxxxxxxxxxxxxx	DMTPSINTVH	07A	0000000000000000	CLC3CONH	0DA	------------0000
ACCBH	02A	xxxxxxxxxxxxxxxx	**SENT**			CLC3SEL	0DC	-000-000-000-000
ACCBU	02C	xxxxxxxxxxxxxxxx	SENT1CON1	080	0000000000000000	CLC3GLSL	0E0	0000000000000000
PCL	02E	0000000000000000	SENT1CON2	084	0000000000000000	CLC3GLSH	0E2	0000000000000000
PCH	030	--------00000000	SENT1CON3	088	0000000000000000	CLC4CONL	0E4	0-0-00--000--000
DSRPAG	032	------0000000001	SENT1STAT	08C	0000000000000000	CLC4CONH	0E6	------------0000
DSWPAG	034	-----00000000001	SENT1SYNC	090	0000000000000000	CLC4SEL	0E8	-000-000-000-000
RCOUNT	036	xxxxxxxxxxxxxxxx	SENT1DATL	094	0000000000000000	CLC4GLSL	0EC	0000000000000000
DCOUNT	038	xxxxxxxxxxxxxxxx	SENT1DATH	096	0000000000000000	CLC4GLSH	0EE	0000000000000000
DOSTART	03A	1111111111111111	SENT2CON1	098	0000000000000000	ECCCONL	0F0	---------------0
DOSTARTL	03A	1111111111111110	SENT2CON2	09C	0000000000000000	ECCCONH	0F2	0000000000000000
DOSTARTH	03C	0000000011111111	SENT2CON3	0A0	0000000000000000	ECCADDRL	0F4	0000000000000000
DOENDL	03E	xxxxxxxxxxxxxxx0	SENT2STAT	0A4	0000000000000000	ECCADDRH	0F6	0000000000000000
DOENDH	040	---------xxxxxxx	SENT2SYNC	0A8	0000000000000000	ECCSTATL	0F8	0000000000000000
SR	042	0000000000000000	SENT2DATL	0AC	0000000000000000	ECCSTATH	0FA	------0000000000
CORCON	044	x-xx000000100000	SENT2DATH	0AE	0000000000000000			

Legend: x = unknown or indeterminate value; "-" = unimplemented bits. Address and Reset values are in hexadecimal and binary, respectively.

Note 1: SFR shown is for the superset 80-pin device.

© 2017-2018 Microchip Technology Inc.

TABLE 3-5: MASTER SFR BLOCK 100h

Register	Address	All Resets	Register	Address	All Resets	Register	Address	All Resets
Timers			INT1TMRH	15E	0000000000000000	MSI1MBX3D	1E0	0000000000000000
T1CON	100	0-0000000-00-00-	INT1HLDL	160	0000000000000000	MSI1MBX4D	1E2	0000000000000000
TMR1	104	0000000000000000	INT1HLDH	162	0000000000000000	MSI1MBX5D	1E4	0000000000000000
PR1	108	0000000000000000	INDX1CNTL	164	0000000000000000	MSI1MBX6D	1E6	0000000000000000
QEI			INDX1CNTH	166	0000000000000000	MSI1MBX7D	1E8	0000000000000000
QEI1CON	140	0000000000000000	INDX1HLDL	168	0000000000000000	MSI1MBX8D	1EA	0000000000000000
QEI1IOCL	144	000000000000xxxx	INDX1HLDH	16A	0000000000000000	MSI1MBX9D	1EC	0000000000000000
QEI1IOCH	146	----------0	QEI1GECL	16C	0000000000000000	MSI1MBX10D	1EE	0000000000000000
QEI1STAT	148	--00000000000000	QEI1GECH	16E	0000000000000000	MSI1MBX11D	1F0	0000000000000000
POS1CNTL	14C	0000000000000000	QEI1LECL	170	0000000000000000	MSI1MBX12D	1F2	0000000000000000
POS1CNTH	14E	0000000000000000	QEI1LECH	172	0000000000000000	MSI1MBX13D	1F4	0000000000000000
POS1HLDL	150	0000000000000000	MSI1CON	1D2	0---xx0000000000	MSI1MBX14D	1F6	0000000000000000
POS1HLDH	152	0000000000000000	MSI1STAT	1D4	0000000000000000	MSI1MBX15D	1F8	0000000000000000
VEL1CNTL	154	0000000000000000	MSI1KEY	1D6	--------00000000	MSI1FIFOCS	1FA	0---00000---0000
VEL1CNTH	156	0000000000000000	MSI1MBXS	1D8	--------00000000	MRSWFDATA	1FC	0000000000000000
VEL1HLDL	158	0000000000000000	MSI1MBX0D	1DA	0000000000000000	MWSRFDATA	1FE	0000000000000000
VEL1HLDH	15A	0000000000000000	MSI1MBX1D	1DC	0000000000000000			
INT1TMRL	15C	0000000000000000	MSI1MBX2D	1DE	0000000000000000			

Legend: x = unknown or indeterminate value; "-" = unimplemented bits. Address and Reset values are in hexadecimal and binary, respectively.

TABLE 3-6: MASTER SFR BLOCK 200h

Register	Address	All Resets	Register	Address	All Resets	Register	Address	All Resets
I²C			U1P2	24E	-------000000000	SPI1CON1H	2AE	0000000000000000
I2C1CONL	200	0-01000000000000	U1P3	250	0000000000000000	SPI1CON2L	2B0	-----------00000
I2C1CONH	202	---------0000000	U1P3H	252	--------00000000	SPI1CON2H	2B2	----------
I2C1STAT	204	000--00000000000	U1TXCHK	254	--------00000000	SPI1STATL	2B4	---00--0001-1-00
I2C1ADD	208	------0000000000	U1RXCHK	256	--------00000000	SPI1STATH	2B6	--000000--000000
I2C1MSK	20C	------0000000000	U1SCCON	258	----------00000-	SPI1BUFL	2B8	0000000000000000
I2C1BRG	210	0000000000000000	U1SCINT	25A	--00-000--00-000	SPI1BUFH	2BA	0000000000000000
I2C1TRN	214	--------11111111	U1INT	25C	--------00---0--	SPI1BRGL	2BC	---xxxxxxxxxxxx
I2C1RCV	218	--------00000000	U2MODE	260	0-000-0000000000	SPI1BRGH	2BE	----------
I2C2CONL	21C	0-01000000000000	U2MODEH	262	00---00000000000	SPI1IMSKL	2C0	---00--0000-0-00
I2C2CONH	21E	---------0000000	U2STA	264	0000000010000000	SPI1IMSKH	2C2	0-0000000-000000
I2C2STAT	220	000--00000000000	U2STAH	266	-000-00000101110	SPI1URDTL	2C4	0000000000000000
I2C2ADD	224	------0000000000	U2BRG	268	0000000000000000	SPI1URDTH	2C6	0000000000000000
I2C2MSK	228	------0000000000	U2BRGH	26A	------------0000	SPI2CON1L	2C8	0-00000000000000
I2C2BRG	22C	0000000000000000	U2RXREG	26C	--------xxxxxxxx	SPI2CON1H	2CA	0000000000000000
I2C2TRN	230	--------11111111	U2TXREG	270	-------xxxxxxxxx	SPI2CON2L	2CC	-----------00000
I2C2RCV	234	--------00000000	U2P1	274	-------000000000	SPI2CON2H	2CE	----------
UART			U2P2	276	-------000000000	SPI2STATL	2D0	---00--0001-1-00
U1MODE	238	0-000-0000000000	U2P3	278	0000000000000000	SPI2STATH	2D2	--000000--000000
U1MODEH	23A	00---00000000000	U2P3H	27A	--------00000000	SPI2BUFL	2D4	0000000000000000
U1STA	23C	0000000010000000	U2TXCHK	27C	--------00000000	SPI2BUFH	2D6	0000000000000000
U1STAH	23E	-000-00000101110	U2RXCHK	27E	--------00000000	SPI2BRGL	2D8	---xxxxxxxxxxxx
U1BRG	240	0000000000000000	U2SCCON	280	----------00000-	SPI2BRGH	2DA	----------
U1BRGH	242	------------0000	U2SCINT	282	--00-000--00-000	SPI2IMSKL	2DC	---00--0000-0-00
U1RXREG	244	--------xxxxxxxx	U2INT	284	--------00---0--	SPI2IMSKH	2DE	0-0000000-000000
U1TXREG	248	-------xxxxxxxxx	**SPI**			SPI2URDTL	2E0	0000000000000000
U1P1	24C	-------000000000	SPI1CON1L	2AC	0-00000000000000	SPI2URDTH	2E2	0000000000000000

Legend: x = unknown or indeterminate value; "-" = unimplemented bits. Address and Reset values are in hexadecimal and binary, respectively.

© 2017-2018 Microchip Technology Inc.

TABLE 3-7: MASTER SFR BLOCK 300h-400h

Register	Address	All Resets	Register	Address	All Resets	Register	Address	All Resets
High-Speed PWM			PG1TRIGB	356	0000000000000000	PG3FFPCIH	3AE	0000-00000000000
PCLKCON	300	00-----0--00--00	PG1TRIGC	358	0000000000000000	PG3SPCIL	3B0	0000000000000000
FSCL	302	0000000000000000	PG1DTL	35A	--00000000000000	PG3SPCIH	3B2	0000-00000000000
FSMINPER	304	0000000000000000	PG1DTH	35C	--00000000000000	PG3LEBL	3B4	0000000000000000
MPHASE	306	0000000000000000	PG1CAP	35E	0000000000000000	PG3LEBH	3B6	-----000----0000
MDC	308	0000000000000000	PG2CONL	360	0-00000000000000	PG3PHASE	3B8	0000000000000000
MPER	30A	0000000000000000	PG2CONH	362	000-000000--0000	PG3DC	3BA	0000000000000000
LFSR	30C	0000000000000000	PG2STAT	364	0000000000000000	PG3DCA	3BC	--------00000000
CMBTRIGL	30E	--------00000000	PG2IOCONL	366	0000000000000000	PG3PER	3BE	0000000000000000
CMBTRIGH	310	--------00000000	PG2IOCONH	368	-000---0--000000	PG3TRIGA	3C0	0000000000000000
LOGCONA	312	000000000000-000	PG2EVTL	36A	00000000---00000	PG3TRIGB	3C2	0000000000000000
LOGCONB	314	000000000000-000	PG2EVTH	36C	0000--0000000000	PG3TRIGC	3C4	0000000000000000
LOGCONC	316	000000000000-000	PG2FPCIL	36E	0000000000000000	PG3DTL	3C6	--00000000000000
LOGCOND	318	000000000000-000	PG2FPCIH	370	0000-00000000000	PG3DTH	3C8	--00000000000000
LOGCONE	31A	000000000000-000	PG2CLPCIL	372	0000000000000000	PG3CAP	3CA	0000000000000000
LOGCONF	31C	000000000000-000	PG2CLPCIH	374	0000-00000000000	PG4CONL	3CC	0-00000000000000
PWMEVTA	31E	0000----0000-000	PG2FFPCIL	376	0000000000000000	PG4CONH	3CE	000-000000--0000
PWMEVTB	320	0000----0000-000	PG2FFPCIH	378	0000-00000000000	PG4STAT	3D0	0000000000000000
PWMEVTC	322	0000----0000-000	PG2SPCIL	37A	0000000000000000	PG4IOCONL	3D2	0000000000000000
PWMEVTD	324	0000----0000-000	PG2SPCIH	37C	0000-00000000000	PG4IOCONH	3D4	-000---0--000000
PWMEVTE	326	0000----0000-000	PG2LEBL	37E	0000000000000000	PG4EVTL	3D6	00000000---00000
PWMEVTF	328	0000----0000-000	PG2LEBH	380	-----000----0000	PG4EVTH	3D8	0000--0000000000
PG1CONL	32A	0-00000000000000	PG2PHASE	382	0000000000000000	PG4FPCIL	3DA	0000000000000000
PG1CONH	32C	000-000000--0000	PG2DC	384	0000000000000000	PG4FPCIH	3DC	0000-00000000000
PG1STAT	32E	0000000000000000	PG2DCA	386	--------00000000	PG4CLPCIL	3DE	0000000000000000
PG1IOCONL	330	0000000000000000	PG2PER	388	0000000000000000	PG4CLPCIH	3E0	0000-00000000000
PG1IOCONH	332	-000---0--000000	PG2TRIGA	38A	0000000000000000	PG4FFPCIL	3E2	0000000000000000
PG1EVTL	334	00000000---00000	PG2TRIGB	38C	0000000000000000	PG4FFPCIH	3E4	0000-00000000000
PG1EVTH	336	0000--0000000000	PG2TRIGC	38E	0000000000000000	PG4SPCIL	3E6	0000000000000000
PG1FPCIL	338	0000000000000000	PG2DTL	390	--00000000000000	PG4SPCIH	3E8	0000-00000000000
PG1FPCIH	33A	0000-00000000000	PG2DTH	392	--00000000000000	PG4LEBL	3EA	0000000000000000
PG1CLPCIL	33C	0000000000000000	PG2CAP	394	0000000000000000	PG4LEBH	3EC	-----000----0000
PG1CLPCIH	33E	0000-00000000000	PG3CONL	396	0-00000000000000	PG4PHASE	3EE	0000000000000000
PG1FFPCIL	340	0000000000000000	PG3CONH	398	000-000000--0000	PG4DC	3F0	0000000000000000
PG1FFPCIH	342	0000-00000000000	PG3STAT	39A	0000000000000000	PG4DCA	3F2	--------00000000
PG1SPCIL	344	0000000000000000	PG3IOCONL	39C	0000000000000000	PG4PER	3F4	0000000000000000
PG1SPCIH	346	0000-00000000000	PG3IOCONH	39E	-000---0--000000	PG4TRIGA	3F6	0000000000000000
PG1LEBL	348	0000000000000000	PG3EVTL	3A0	00000000---00000	PG4TRIGB	3F8	0000000000000000
PG1LEBH	34A	-----000----0000	PG3EVTH	3A2	0000--0000000000	PG4TRIGC	3FA	0000000000000000
PG1PHASE	34C	0000000000000000	PG3FPCIL	3A4	0000000000000000	PG4DTL	3FC	--00000000000000
PG1DC	34E	0000000000000000	PG3FPCIH	3A6	0000-00000000000	PG4DTH	3FE	--00000000000000
PG1DCA	350	--------00000000	PG3CLPCIL	3A8	0000000000000000	PG4CAP	400	0000000000000000
PG1PER	352	0000000000000000	PG3CLPCIH	3AA	0000-00000000000			
PG1TRIGA	354	0000000000000000	PG3FFPCIL	3AC	0000000000000000			

Legend: x = unknown or indeterminate value; "-" = unimplemented bits. Address and Reset values are in hexadecimal and binary, respectively.

TABLE 3-8: MASTER SFR BLOCK 500h

Register	Address	All Resets	Register	Address	All Resets	Register	Address	All Resets
CAN FD			C1TSCONL	5D4	------0000000000	C1RXOVIFH	5EA	0000000000000000
C1CONL	5C0	0-00011101100000	C1TSCONH	5D6	----------000	C1TXATIFL	5EC	0000000000000000
C1CONH	5C2	0000010010011000	C1VECL	5D8	---00000-1000000	C1TXATIFH	5EE	0000000000000000
C1NBTCFGL	5C4	-0001111-0001111	C1VECH	5DA	-10000---1000000	C1TXREQL	5F0	0000000000000000
C1NBTCFGH	5C6	0000000000111110	C1INTL	5DC	000000-----00000	C1TXREQH	5F2	0000000000000000
C1DBTCFGL	5C8	----0011----0011	C1INTH	5DE	00000000---00000	C1TRECL	5F4	0000000000000000
C1DBTCFGH	5CA	00000000---01110	C1RXIFL	5E0	000000000000000-	C1TRECH	5F6	----------100000
C1TDCL	5CC	-0010000--000000	C1RXIFH	5E2	0000000000000000	C1BDIAG0L	5F8	0000000000000000
C1TDCH	5CE	------00------10	C1TXIFL	5E4	0000000000000000	C1BDIAG0H	5FA	0000000000000000
C1TBCL	5D0	0000000000000000	C1TXIFH	5E6	0000000000000000	C1BDIAG1L	5FC	0000000000000000
C1TBCH	5D2	0000000000000000	C1RXOVIFL	5E8	000000000000000-	C1BDIAG1H	5FE	00000-000-000000

Legend: x = unknown or indeterminate value; “-” = unimplemented bits. Address and Reset values are in hexadecimal and binary, respectively.

© 2017-2018 Microchip Technology Inc.

TABLE 3-9: MASTER SFR BLOCK 600h

Register	Address	All Resets	Register	Address	All Resets	Register	Address	All Resets
CAN FD (Continued)			C1FIFOCON6H	65A	00000000-1100000	C1MASK5L	6AC	0000000000000000
C1TEFCONL	600	-----100--0-0000	C1FIFOSTA6	65C	---0000000000000	C1MASK5H	6AE	0000000000000000
C1TEFCONH	602	---00000--------	C1FIFOUA6L	660	xxxxxxxxxxxxxxxx	C1FLTOBJ6L	6B0	0000000000000000
C1TEFSTA	604	------------0000	C1FIFOUA6H	662	xxxxxxxxxxxxxxxx	C1FLTOBJ6H	6B2	0000000000000000
C1TEFUAL	608	xxxxxxxxxxxxxxxx	C1FIFOCON7L	664	-----10000000000	C1MASK6L	6B4	0000000000000000
C1TEFUAH	60A	xxxxxxxxxxxxxxxx	C1FIFOCON7H	666	00000000-1100000	C1MASK6H	6B6	0000000000000000
C1FIFOBAL	60C	0000000000000000	C1FIFOSTA7	668	---0000000000000	C1FLTOBJ7L	7B8	0000000000000000
C1FIFOBAH	60E	0000000000000000	C1FIFOUA7L	66C	xxxxxxxxxxxxxxxx	C1FLTOBJ7H	6BA	0000000000000000
C1TXQCONL	610	-----1001--0-0-0	C1FIFOUA7H	66E	xxxxxxxxxxxxxxxx	C1MASK7L	6BC	0000000000000000
C1TXQCONH	612	00000000-1100000	C1FLTCON0L	670	0--000000--00000	C1MASK7H	6BE	0000000000000000
C1TXQSTA	614	---000000000-0-0	C1FLTCON0H	672	0--000000--00000	C1FLTOBJ8L	6C0	0000000000000000
C1TXQUAL	618	xxxxxxxxxxxxxxxx	C1FLTCON1L	674	0--000000--00000	C1FLTOBJ8H	6C2	0000000000000000
C1TXQUAH	61A	xxxxxxxxxxxxxxxx	C1FLTCON1H	676	0--000000--00000	C1MASK8L	6C4	0000000000000000
C1FIFOCON1L	61C	-----10000000000	C1FLTCON2L	678	0--000000--00000	C1MASK8H	6C6	0000000000000000
C1FIFOCON1H	61E	00000000-1100000	C1FLTCON2H	67A	0--000000--00000	C1FLTOBJ9L	6C8	0000000000000000
C1FIFOSTA1	620	---0000000000000	C1FLTCON3L	67C	0--000000--00000	C1FLTOBJ9H	6CA	0000000000000000
C1FIFOUA1L	624	xxxxxxxxxxxxxxxx	C1FLTCON3H	67E	0--000000--00000	C1MASK9L	6CC	0000000000000000
C1FIFOUA1H	626	xxxxxxxxxxxxxxxx	C1FLTOBJ0L	680	0000000000000000	C1MASK9H	6CE	0000000000000000
C1FIFOCON2L	628	-----10000000000	C1FLTOBJ0H	682	0000000000000000	C1FLTOBJ10L	6D0	0000000000000000
C1FIFOCON2H	62A	00000000-1100000	C1MASK0L	684	0000000000000000	C1FLTOBJ10H	6D2	0000000000000000
C1FIFOSTA2	62C	---0000000000000	C1MASK0H	686	0000000000000000	C1MASK10L	6D4	0000000000000000
C1FIFOUA2L	630	xxxxxxxxxxxxxxxx	C1FLTOBJ1L	688	0000000000000000	C1MASK10H	6D6	0000000000000000
C1FIFOUA2H	632	xxxxxxxxxxxxxxxx	C1FLTOBJ1H	68A	0000000000000000	C1FLTOBJ11L	6D8	0000000000000000
C1FIFOCON3L	634	-----10000000000	C1MASK1L	68C	0000000000000000	C1FLTOBJ11H	6DA	0000000000000000
C1FIFOCON3H	636	00000000-1100000	C1MASK1H	68E	0000000000000000	C1MASK11L	6DC	0000000000000000
C1FIFOSTA3	638	---0000000000000	C1FLTOBJ2L	690	0000000000000000	C1MASK11H	6DE	0000000000000000
C1FIFOUA3L	63C	xxxxxxxxxxxxxxxx	C1FLTOBJ2H	692	0000000000000000	C1FLTOBJ12L	6E0	0000000000000000
C1FIFOUA3H	63E	xxxxxxxxxxxxxxxx	C1MASK2L	694	0000000000000000	C1FLTOBJ12H	6E2	0000000000000000
C1FIFOCON4L	640	-----10000000000	C1MASK2H	696	0000000000000000	C1MASK12L	6E4	0000000000000000
C1FIFOCON4H	642	00000000-1100000	C1FLTOBJ3L	698	0000000000000000	C1MASK12H	6E6	0000000000000000
C1FIFOSTA4	644	---0000000000000	C1FLTOBJ3H	69A	0000000000000000	C1FLTOBJ13L	6E8	0000000000000000
C1FIFOUA4L	648	xxxxxxxxxxxxxxxx	C1MASK3L	69C	0000000000000000	C1FLTOBJ13H	6EA	0000000000000000
C1FIFOUA4H	64A	xxxxxxxxxxxxxxxx	C1MASK3H	69C	0000000000000000	C1MASK13L	6EC	0000000000000000
C1FIFOCON5L	64C	-----10000000000	C1FLTOBJ4L	6A0	0000000000000000	C1MASK13H	6EE	0000000000000000
C1FIFOCON5H	64E	00000000-1100000	C1FLTOBJ4H	6A2	0000000000000000	C1FLTOBJ14L	6F0	0000000000000000
C1FIFOSTA5	650	---0000000000000	C1MASK4L	6A4	0000000000000000	C1FLTOBJ14H	6F2	0000000000000000
C1FIFOUA5L	654	xxxxxxxxxxxxxxxx	C1MASK4H	6A6	0000000000000000			
C1FIFOUA5H	656	xxxxxxxxxxxxxxxx	C1FLTOBJ5L	6A8	0000000000000000			
C1FIFOCON6L	658	-----10000000000	C1FLTOBJ5H	6AA	0000000000000000			

Legend: x = unknown or indeterminate value; "-" = unimplemented bits. Address and Reset values are in hexadecimal and binary, respectively.

TABLE 3-10: MASTER SFR BLOCK 700h

Register	Address	All Resets	Register	Address	All Resets	Register	Address	All Resets
CAN FD (Continued)			C1FLTOBJ15L	6F8	0000000000000000	C1MASK15H	6FE	-000000000000000
C1MASK14L	6F4	0000000000000000	C1FLTOBJ15H	6FA	-000000000000000			
C1MASK14H	6F6	-000000000000000	C1MASK15L	6FC	0000000000000000			

Legend: x = unknown or indeterminate value; "-" = unimplemented bits. Address and Reset values are in hexadecimal and binary, respectively.

TABLE 3-11: MASTER SFR BLOCK 800h

Register	Address	All Resets	Register	Address	All Resets	Register	Address	All Resets
Interrupts			IPC3	846	-100-100-100-100	IPC33	882	-100-100-100-100
IFS0	800	0000000000-00000	IPC4	848	-100-100-100-100	IPC34	884	-100-100-100-100
IFS1	802	0000000000000000	IPC5	84A	-100-100-100-100	IPC35	886	---------100-100
IFS2	804	00000-00-00000--	IPC6	84C	-100-100-100-100	IPC35	886	---------100-100
IFS3	806	000--------00000	IPC7	84E	-100-100-100-100	IPC36	888	-----100--------
IFS4	808	--000----0000-00	IPC8	850	-100-100--------	IPC37	88A	-----100-100----
IFS5	80A	000000000000000-	IPC9	852	-----100-100-100	IPC38	88C	---------100-100
IFS6	80C	0000000000000000	IPC10	854	-100-----100-100	IPC39	88E	---------100----
IFS7	80E	0000000000000---	IPC11	856	-100-100-100-100	IPC42	894	-100-100-100-100
IFS8	810	--0000000000000-	IPC12	858	-100-100-100-100	IPC43	896	-100-100-100-100
IFS9	812	--0---00-00--0--	IPC13	85A	-------------100	IPC44	898	-100-100-100-100
IFS10	814	00000000--------	IPC15	85E	-100-100-100----	IPC45	89A	-------------100
IFS11	816	-00--------00000	IPC16	860	-100-----100-100	IPC47	89E	-----100-100----
IEC0	820	0000000000-00000	IPC17	862	-----100-100-100	INTCON1	8C0	000000000000000-
IEC1	822	0000000000000000	IPC18	864	-100------------	INTCON2	8C2	000----0----0000
IEC2	824	00000-00-00000--	IPC19	866	---------100-100	INTCON3	8C4	-------0---0---0
IEC3	826	000--------00000	IPC20	868	-100-100-100----	INTCON4	8C6	--------------00
IEC4	828	--000----0000-00	IPC21	86A	-100-100-100-100	INTTREG	8C8	000-000000000000
IEC5	82A	000000000000000-	IPC22	86C	-100-100-100-100	**Flash**		
IEC6	82C	0000000000000000	IPC23	86E	-100-100-100-100	NVMCON	8D0	0000--00----0000
IEC7	82E	0000000000000---	IPC24	870	-100-100-100-100	NVMADR	8D2	0000000000000000
IEC8	830	--0000000000000-	IPC25	872	-100-100-100-100	NVMADRU	8D4	--------00000000
IEC8	830	--0000000000000-	IPC26	874	-100-100-100-100	NVMKEY	8D6	--------00000000
IEC9	832	--0---00-00--0--	IPC27	876	-100-100-100-100	NVMSRCADRL	8D8	0000000000000000
IEC10	834	00000000------00	IPC28	878	-100------------	NVMSRCADRH	8DA	--------00000000
IEC11	836	-00--------00000	IPC29	87A	-100-100-100-100	**CBG**		
IPC0	840	-100-100-100-100	IPC30	87C	-100-100-100-100	BIASCON	8F0	--------0---0000
IPC1	842	-100-100-----100	IPC31	87E	-100-100-100-100	IBIASCONL	8F4	--000000--000000
IPC2	844	-100-100-100-100	IPC32	880	-100-100-100----	IBIASCONH	8F6	--000000--000000

Legend: x = unknown or indeterminate value; "-" = unimplemented bits. Address and Reset values are in hexadecimal and binary, respectively.

© 2017-2018 Microchip Technology Inc.

TABLE 3-12: MASTER SFR BLOCK 900h

Register	Address	All Resets	Register	Address	All Resets	Register	Address	All Resets
PTG			CCP1CON3H	95A	0000------0-00--	CCP3PRL	9AC	1111111111111111
PTGCST	900	0-00-00000x---00	CCP1STATL	95C	-----0--00xx0000	CCP3PRH	9AE	1111111111111111
PTGCON	902	-----00000000000	CCP1STATH	95E	-----00000	CCP3RAL	9B0	0000000000000000
PTGBTE	904	xxxxxxxxxxxxxxxx	CCP1TMRL	960	0000000000000000	CCP3RBL	9B4	0000000000000000
PTGBTEH	906	----------	CCP1TMRH	962	0000000000000000	CCP3BUFL	9B8	0000000000000000
PTGHOLD	908	0000000000000000	CCP1PRL	964	1111111111111111	CCP3BUFH	9BA	0000000000000000
PTGT0LIM	90C	0000000000000000	CCP1PRH	966	1111111111111111	CCP4CON1L	9BC	0-00000000000000
PTGT1LIM	910	0000000000000000	CCP1RAL	968	0000000000000000	CCP4CON1H	9BE	00--000000000000
PTGSDLIM	914	0000000000000000	CCP1RBL	96C	0000000000000000	CCP4CON2L	9C0	00-0----00000000
PTGC0LIM	918	0000000000000000	CCP1BUFL	970	0000000000000000	CCP4CON2H	9C2	0------100-00000
PTGC1LIM	91C	0000000000000000	CCP1BUFH	972	0000000000000000	CCP4CON3H	9C6	0000------0-00--
PTGADJ	920	0000000000000000	CCP2CON1L	974	0-00000000000000	CCP4STATL	9C8	-----0--00xx0000
PTGL0	924	0000000000000000	CCP2CON1H	976	00--000000000000	CCP4STATH	9CA	-----00000
PTGQPTR	928	-----00000	CCP2CON2L	978	00-0----00000000	CCP4TMRL	9CC	0000000000000000
PTGQUE0	930	xxxxxxxxxxxxxxxx	CCP2CON2H	97A	0------100-00000	CCP4TMRH	9CE	0000000000000000
PTGQUE1	932	xxxxxxxxxxxxxxxx	CCP2CON3H	97E	0000------0-00--	CCP4PRL	9D0	1111111111111111
PTGQUE2	934	xxxxxxxxxxxxxxxx	CCP2STATL	980	-----0--00xx0000	CCP4PRH	9D2	1111111111111111
PTGQUE3	936	xxxxxxxxxxxxxxxx	CCP2STATH	982	-----00000	CCP4RAL	9D4	0000000000000000
PTGQUE4	938	xxxxxxxxxxxxxxxx	CCP2TMRL	984	0000000000000000	CCP4RBL	9D8	0000000000000000
PTGQUE5	93A	xxxxxxxxxxxxxxxx	CCP2TMRH	986	0000000000000000	CCP4BUFL	9DC	0000000000000000
PTGQUE6	93C	xxxxxxxxxxxxxxxx	CCP2PRL	988	1111111111111111	CCP4BUFH	9DE	0000000000000000
PTGQUE7	93E	xxxxxxxxxxxxxxxx	CCP2PRH	98A	1111111111111111	CCP5CON1L	9E0	0-00000000000000
PTGQUE8	940	xxxxxxxxxxxxxxxx	CCP2RAL	98C	0000000000000000	CCP5CON1H	9E2	00--000000000000
PTGQUE9	942	xxxxxxxxxxxxxxxx	CCP2RBL	990	0000000000000000	CCP5CON2L	9E4	00-0----00000000
PTGQUE10	944	xxxxxxxxxxxxxxxx	CCP2BUFL	994	0000000000000000	CCP5CON2H	9E6	0------100-00000
PTGQUE11	946	xxxxxxxxxxxxxxxx	CCP2BUFH	996	0000000000000000	CCP5CON3H	9EA	0000------0-00--
PTGQUE12	948	xxxxxxxxxxxxxxxx	CCP3CON1L	998	0-00000000000000	CCP5STATL	9EC	-----0--00xx0000
PTGQUE13	94A	xxxxxxxxxxxxxxxx	CCP3CON1H	99A	00--000000000000	CCP5STATH	9EE	-----00000
PTGQUE14	94C	xxxxxxxxxxxxxxxx	CCP3CON2L	99C	00-0----00000000	CCP5TMRL	9F0	0000000000000000
PTGQUE15	94E	xxxxxxxxxxxxxxxx	CCP3CON2H	99E	0------100-00000	CCP5TMRH	9F2	0000000000000000
CCP			CCP3CON3H	9A2	0000------0-00--	CCP5PRL	9F4	1111111111111111
CCP1CON1L	950	0-00000000000000	CCP3STATL	9A4	-----0--00xx0000	CCP5PRH	9F6	1111111111111111
CCP1CON1H	952	00--000000000000	CCP3STATH	9A6	-----00000	CCP5RAL	9F8	0000000000000000
CCP1CON2L	954	00-0----00000000	CCP3TMRL	9A8	0000000000000000	CCP5RBL	9FC	0000000000000000
CCP1CON2H	956	0------100-00000	CCP3TMRH	9AA	0000000000000000			

Legend: x = unknown or indeterminate value; “-” = unimplemented bits. Address and Reset values are in hexadecimal and binary, respectively.

TABLE 3-13: MASTER SFR BLOCK A00h

Register	Address	All Resets	Register	Address	All Resets	Register	Address	All Resets
CCP (Continued)			CCP7PRH	A3E	1111111111111111	DMADST0	ACA	0000000000000000
CCP5BUFL	A00	0000000000000000	CCP7RAL	A40	0000000000000000	DMACNT0	ACC	0000000000000001
CCP5BUFH	A02	0000000000000000	CCP7RBL	A44	0000000000000000	DMACH1	ACE	---0-00000000000
CCP6CON1L	A04	0-00000000000000	CCP7BUFL	A48	0000000000000000	DMAINT1	AD0	0000000000000--0
CCP6CON1H	A06	00--000000000000	CCP7BUFH	A4A	0000000000000000	DMASRC1	AD2	0000000000000000
CCP6CON2L	A08	00-0----00000000	CCP8CON1L	A4C	0-00000000000000	DMADST1	AD4	0000000000000000
CCP6CON2H	A0A	0------100-00000	CCP8CON1H	A4E	00--000000000000	DMACNT1	AD6	0000000000000001
CCP6CON3H	A0E	0000------0-00--	CCP8CON2L	A50	00-0----00000000	DMACH2	AD8	---0-00000000000
CCP6STATL	A10	-----0--00xx0000	CCP8CON2H	A52	0------100-00000	DMAINT2	ADA	0000000000000--0
CCP6STATH	A12	-----------00000	CCP8CON3H	A56	0000------0-00--	DMASRC2	ADC	0000000000000000
CCP6TMRL	A14	0000000000000000	CCP8STATL	A58	-----0--00xx0000	DMADST2	ADE	0000000000000000
CCP6TMRH	A16	0000000000000000	CCP8STATH	A5A	-----------00000	DMACNT2	AE0	0000000000000001
CCP6PRL	A18	1111111111111111	CCP8TMRL	A5C	0000000000000000	DMACH3	AE2	---0-00000000000
CCP6PRH	A1A	1111111111111111	CCP8TMRH	A5E	0000000000000000	DMAINT3	AE4	0000000000000--0
CCP6RAL	A1C	0000000000000000	CCP8PRL	A60	1111111111111111	DMASRC3	AE6	0000000000000000
CCP6RBL	A20	0000000000000000	CCP8PRH	A62	1111111111111111	DMADST3	AE8	0000000000000000
CCP6BUFL	A24	0000000000000000	CCP8RAL	A64	0000000000000000	DMACNT3	AEA	0000000000000001
CCP6BUFH	A26	0000000000000000	CCP8RBL	A68	0000000000000000	DMACH4	AEC	---0-00000000000
CCP7CON1L	A28	0-00000000000000	CCP8BUFL	A6C	0000000000000000	DMAINT4	AEE	0000000000000--0
CCP7CON1H	A2A	00--000000000000	CCP8BUFH	A6E	0000000000000000	DMASRC4	AF0	0000000000000000
CCP7CON2L	A2C	00-0----00000000	**DMA**			DMADST4	AF2	0000000000000000
CCP7CON2H	A2E	0------100-00000	DMACON	ABC	0--------------0	DMACNT4	AF4	0000000000000001
CCP7CON3H	A32	0000------0-00--	DMABUF	ABE	0000000000000000	DMACH5	AF6	---0-00000000000
CCP7STATL	A34	-----0--00xx0000	DMAL	AC0	0000000000000000	DMAINT5	AF8	0000000000000--0
CCP7STATH	A36	-----------00000	DMAH	AC2	0001000000000000	DMASRC5	AFA	0000000000000000
CCP7TMRL	A38	0000000000000000	DMACH0	AC4	---0-00000000000	DMADST5	AFC	0000000000000000
CCP7TMRH	A3A	0000000000000000	DMAINT0	AC6	0000000000000--0	DMACNT5	AFE	0000000000000001
CCP7PRL	A3C	1111111111111111	DMASRC0	AC8	0000000000000000			

Legend: x = unknown or indeterminate value; “-” = unimplemented bits. Address and Reset values are in hexadecimal and binary, respectively.

© 2017-2018 Microchip Technology Inc.

TABLE 3-14: MASTER SFR BLOCK B00h

Register	Address	All Resets	Register	Address	All Resets	Register	Address	All Resets
ADC			ADCMP1ENH	B42	----------00000	ADTRIG0H	B82	0000000000000000
ADCON1L	B00	000-00000----000	ADCMP1LO	B44	0000000000000000	ADTRIG1L	B84	0000000000000000
ADCON1H	B02	--------011-----	ADCMP1HI	B46	0000000000000000	ADTRIG1H	B86	0000000000000000
ADCON2L	B04	00-0-00000000000	ADCMP2ENL	B48	0000000000000000	ADTRIG2L	B88	0000000000000000
ADCON2H	B06	00-0000000000000	ADCMP2ENH	B4A	----------00000	ADTRIG2H	B8A	0000000000000000
ADCON3L	B08	00000x0000000000	ADCMP2LO	B4C	0000000000000000	ADTRIG3L	B8C	0000000000000000
ADCON3H	B0A	000000000-------	ADCMP2HI	B4E	0000000000000000	ADTRIG3H	B8E	0000000000000000
ADMOD0L	B10	-0-0-0-0-0-0-0-0	ADCMP3ENL	B50	0000000000000000	ADTRIG4L	B90	0000000000000000
ADMOD0H	B12	-0-0-0-0-0-0-0-0	ADCMP3ENH	B52	----------00000	ADTRIG4H	B92	0000000000000000
ADMOD1L	B14	-------0-0-0-0-0	ADCMP3LO	B54	0000000000000000	ADTRIG5L	B94	000-----00000000
ADIEL	B20	xxxxxxxxxxxxxxxx	ADCMP3HI	B56	0000000000000000	ADCMP0CON	BA0	0000000000000000
ADIEH	B22	----------xxxxx	ADFL0DAT	B68	0000000000000000	ADCMP1CON	BA4	0000000000000000
ADCSS1L	B28	0000000000000000	ADFL0CON	B6A	0xx0000000000000	ADCMP2CON	BA8	0000000000000000
ADSTATL	B30	0000000000000000	ADFL1DAT	B6C	0000000000000000	ADCMP3CON	BAC	0000000000000000
ADSTATH	B32	----------00000	ADFL1CON	B6E	0xx0000000000000	ADLVLTRGL	BD0	0000000000000000
ADCMP0ENL	B38	0000000000000000	ADFL2DAT	B70	0000000000000000	ADLVLTRGH	BD2	----------xxxxx
ADCMP0ENH	B3A	----------00000	ADFL2CON	B72	0xx0000000000000	ADEIEL	BF0	xxxxxxxxxxxxxxxx
ADCMP0LO	B3C	0000000000000000	ADFL3DAT	B74	0000000000000000	ADEIEH	BF2	----------xxxxx
ADCMP0HI	B3E	0000000000000000	ADFL3CON	B76	0xx0000000000000	ADEISTATL	BF8	xxxxxxxxxxxxxxxx
ADCMP1ENL	B40	0000000000000000	ADTRIG0L	B80	0000000000000000	ADEISTATH	BFA	----------xxxxx

Legend: x = unknown or indeterminate value; “-” = unimplemented bits. Address and Reset values are in hexadecimal and binary, respectively.

TABLE 3-15: MASTER SFR BLOCK C00h

Register	Address	All Resets	Register	Address	All Resets	Register	Address	All Resets
ADC (Continued)			ADCBUF9	C1E	0000000000000000	**DAC**		
ADCON5L	C00	0-------0-------	ADCBUF10	C20	0000000000000000	DACCTRL1L	C80	000-----0000-000
ADCON5H	C02	0---xxxx0-------	ADCBUF11	C22	0000000000000000	DACCTRL2L	C84	------0001010101
ADCAL1H	C0A	00000-00-000----	ADCBUF12	C24	0000000000000000	DACCTRL2H	C86	------0010001010
ADCBUF0	C0C	0000000000000000	ADCBUF13	C26	0000000000000000	DAC1CONL	C88	000--000x0000000
ADCBUF1	C0E	0000000000000000	ADCBUF14	C28	0000000000000000	DAC1CONH	C8A	------0000000000
ADCBUF2	C10	0000000000000000	ADCBUF15	C2A	0000000000000000	DAC1DATL	C8C	0000000000000000
ADCBUF3	C12	0000000000000000	ADCBUF16	C2C	0000000000000000	DAC1DATH	C8E	0000000000000000
ADCBUF4	C14	0000000000000000	ADCBUF17	C2E	0000000000000000	SLP1CONL	C90	0000000000000000
ADCBUF5	C16	0000000000000000	ADCBUF18	C30	0000000000000000	SLP1CONH	C92	0---000---------
ADCBUF6	C18	0000000000000000	ADCBUF19	C32	0000000000000000	SLP1DAT	C94	0000000000000000
ADCBUF7	C1A	0000000000000000	ADCBUF20	C34	0000000000000000	VREGCON	CFC	0---------000000
ADCBUF8	C1C	0000000000000000						

Legend: x = unknown or indeterminate value; “-” = unimplemented bits. Address and Reset values are in hexadecimal and binary, respectively.

© 2017-2018 Microchip Technology Inc.

TABLE 3-16: MASTER SFR BLOCK D00h

Register	Address	All Resets	Register	Address	All Resets	Register	Address	All Resets
I/O Ports			RPINR19	D2A	1111111111111111	RPOR4	D88	--000000--000000
RPCON	D00	----0----------	RPINR20	D2C	1111111111111111	RPOR5	D8A	--000000--000000
RPINR0	D04	11111111--------	RPINR21	D2E	1111111111111111	RPOR6	D8C	--000000--000000
RPINR1	D06	1111111111111111	RPINR22	D30	1111111111111111	RPOR7	D8E	--000000--000000
RPINR2	D08	11111111--------	RPINR23	D32	1111111111111111	RPOR8	D90	--000000--000000
RPINR3	D0A	1111111111111111	RPINR26	D38	--------11111111	RPOR9	D92	--000000--000000
RPINR4	D0C	1111111111111111	RPINR30	D40	11111111--------	RPOR10	D94	--000000--000000
RPINR5	D0E	1111111111111111	RPINR37	D4E	11111111--------	RPOR11	D96	--000000--000000
RPINR6	D10	1111111111111111	RPINR38	D50	--------11111111	RPOR12	D98	--000000--000000
RPINR7	D12	1111111111111111	RPINR42	D58	1111111111111111	RPOR13	D9A	--000000--000000
RPINR8	D14	1111111111111111	RPINR43	D5A	1111111111111111	RPOR14	D9C	--000000--000000
RPINR9	D16	1111111111111111	RPINR44	D5C	1111111111111111	RPOR15	D9E	--000000--000000
RPINR10	D18	1111111111111111	RPINR45	D5E	1111111111111111	RPOR16	DA0	--000000--000000
RPINR11	D1A	1111111111111111	RPINR46	D60	1111111111111111	RPOR17	DA2	--000000--000000
RPINR12	D1C	1111111111111111	RPINR47	D62	1111111111111111	RPOR18	DA4	--000000--000000
RPINR13	D1E	1111111111111111	RPOR0	D80	--000000--000000	RPOR19	DA6	--000000--000000
RPINR14	D20	1111111111111111	RPOR1	D82	--000000--000000	RPOR20	DA8	--000000--000000
RPINR15	D22	1111111111111111	RPOR2	D84	--000000--000000	RPOR21	DAA	--000000--000000
RPINR18	D28	1111111111111111	RPOR3	D86	--000000--000000	RPOR22	DAC	--000000--000000

Legend: x = unknown or indeterminate value; “-” = unimplemented bits. Address and Reset values are in hexadecimal and binary, respectively.

TABLE 3-17: MASTER SFR BLOCK E00h

Register	Address	All Resets	Register	Address	All Resets	Register	Address	All Resets
I/O Ports (Continued)			CNCONB	E2A	0---0----------	LATD	E5A	xxxxxxxxxxxxxxxx
ANSELA	E00	----------11111	CNEN0B	E2C	0000000000000000	ODCD	E5C	0000000000000000
TRISA	E02	----------11111	CNSTATB	E2E	0000000000000000	CNPUD	E5E	0000000000000000
PORTA	E04	----------xxxxx	CNEN1B	E30	0000000000000000	CNPDD	E60	0000000000000000
LATA	E06	----------xxxxx	CNFB	E32	0000000000000000	CNCOND	E62	0---0----------
ODCA	E08	----------00000	ANSELC	E38	--------1---1111	CNEN0D	E64	0000000000000000
CNPUA	E0A	----------00000	TRISC	E3A	1111111111111111	CNSTATD	E66	0000000000000000
CNPDA	E0C	----------00000	PORTC	E3C	xxxxxxxxxxxxxxxx	CNEN1D	E68	0000000000000000
CNCONA	E0E	0---0----------	LATC	E3E	xxxxxxxxxxxxxxxx	CNFD	E6A	0000000000000000
CNEN0A	E10	----------00000	ODCC	E40	0000000000000000	TRISE	E72	1111111111111111
CNSTATA	E12	----------00000	CNPUC	E42	0000000000000000	PORTE	E74	xxxxxxxxxxxxxxxx
CNEN1A	E14	----------00000	CNPDC	E44	0000000000000000	LATE	E76	xxxxxxxxxxxxxxxx
CNFA	E16	----------00000	CNCONC	E46	0---0----------	ODCE	E78	0000000000000000
ANSELB	E1C	------111---1111	CNEN0C	E48	0000000000000000	CNPUE	E7A	0000000000000000
TRISB	E1E	1111111111111111	CNSTATC	E4A	0000000000000000	CNPDE	E7C	0000000000000000
PORTB	E20	xxxxxxxxxxxxxxxx	CNEN1C	E4C	0000000000000000	CNCONE	E7E	0---0----------
LATB	E22	xxxxxxxxxxxxxxxx	CNFC	E4E	0000000000000000	CNEN0E	E80	0000000000000000
ODCB	E24	0000000000000000	ANSELD	E54	-----1----------	CNSTATE	E82	0000000000000000
CNPUB	E26	0000000000000000	TRISD	E56	1111111111111111	CNEN1E	E84	0000000000000000
CNPDB	E28	0000000000000000	PORTD	E58	xxxxxxxxxxxxxxxx	CNFE	E86	0000000000000000

Legend: x = unknown or indeterminate value; “-” = unimplemented bits. Address and Reset values are in hexadecimal and binary, respectively.

© 2017-2018 Microchip Technology Inc.

TABLE 3-18: MASTER SFR BLOCK F00h

Register	Address	All Resets	Register	Address	All Resets	Register	Address	All Resets
Reset			PMD1	FA4	----000-00000-00	PCTRAPH	FC2	--------00000000
RCON	F80	00--x-0000000011	PMD2	FA6	--------00000000	FEXL	FC4	xxxxxxxxxxxxxxxx
Oscillator			PMD3	FA8	--------0-----0-	FEXH	FC6	--------xxxxxxxx
OSCCON	F84	-000-yyy0-0-0--0	PMD4	FAA	------------0---	DPCL	FCE	xxxxxxxxxxxxxxxx
CLKDIV	F86	00110000--000001	PMD6	FAE	--000000--------	DPCH	FD0	--------xxxxxxxx
PLLFBD	F88	----000010010110	PMD7	FB0	-------x----0---	APPO	FD2	xxxxxxxxxxxxxxxx
PLLDIV	F8A	------00-011-001	PMD8	FB2	---00--0--xx000-	APPI	FD4	xxxxxxxxxxxxxxxx
OSCTUN	F8C	----------000000	**WDT**			APPS	FD6	-----------xxxxx
ACLKCON1	F8E	00-----0--000001	WDTCONL	FB4	0--0000000000000	STROUTL	FD8	xxxxxxxxxxxxxxxx
APLLFBD1	F90	----000010010110	WDTCONH	FB6	0000000000000000	STROUTH	FDA	xxxxxxxxxxxxxxxx
APLLDIV1	F92	------00-011-001	REFOCONL	FB8	0-000-00----0000	STROVCNT	FDC	xxxxxxxxxxxxxxxx
CANCLKCON	F9A	----xxxx-xxxxxxx	REFOCONH	FBA	-000000000000000	JDATAH	FFA	xxxxxxxxxxxxxxxx
PMD			REFOTRIML	FBC	0000000000000000	JDATAL	FFC	xxxxxxxxxxxxxxxx
PMDCON	FA0	----0-----------	PCTRAPL	FC0	0000000000000000			

Legend: x = unknown or indeterminate value; “-” =unimplemented bits; y = value set by Configuration bits. Address and Reset values are in hexadecimal and binary, respectively.

3.2.5.1 Paged Memory Scheme

The dsPIC33CH128MP508 architecture extends the available Data Space through a paging scheme, which allows the available Data Space to be accessed using `MOV` instructions in a linear fashion for pre- and post-modified Effective Addresses (EAs). The upper half of the base Data Space address is used in conjunction with the Data Space Read Page (DSRPAG) register to form the Program Space Visibility (PSV) address.

The Data Space Read Page (DSRPAG) register is located in the SFR space. Construction of the PSV address is shown in Figure 3-7. When DSRPAG<9> = 1 and the base address bit, EA<15> = 1, the DSRPAG<8:0> bits are concatenated onto EA<14:0> to form the 24-bit PSV read address.

The paged memory scheme provides access to multiple 32-Kbyte windows in the PSV memory. The Data Space Read Page (DSRPAG) register, in combination with the upper half of the Data Space address, can provide up to 8 Mbytes of PSV address space. The paged data memory space is shown in Figure 3-8.

The Program Space (PS) can be accessed with a DSRPAG of 0x200 or greater. Only reads from PS are supported using the DSRPAG.

FIGURE 3-7: PROGRAM SPACE VISIBILITY (PSV) READ ADDRESS GENERATION

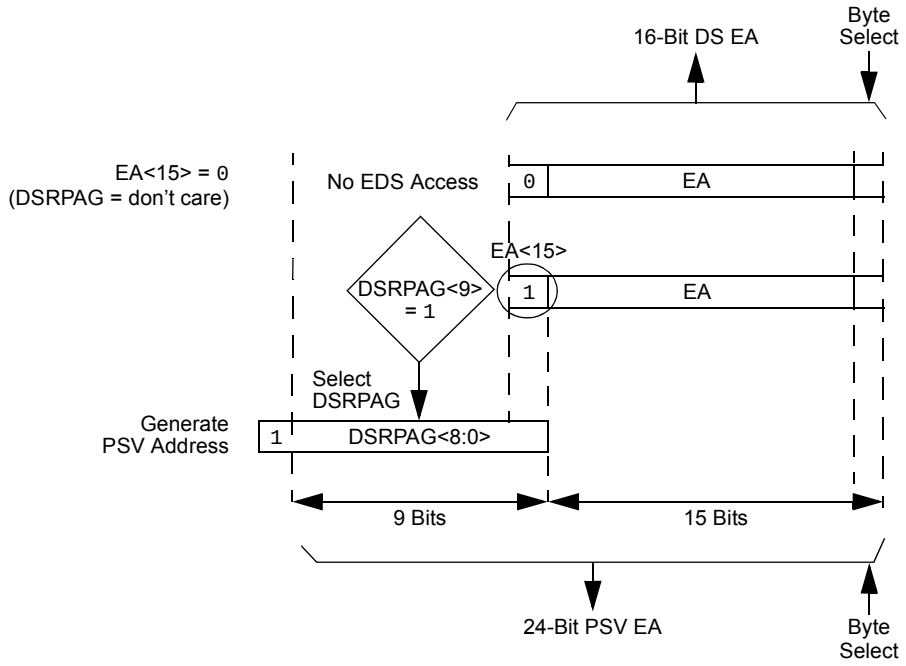

Note: DS read access when DSRPAG = 0x000 will force an address error trap.

© 2017-2018 Microchip Technology Inc.

FIGURE 3-8: PAGED DATA MEMORY SPACE

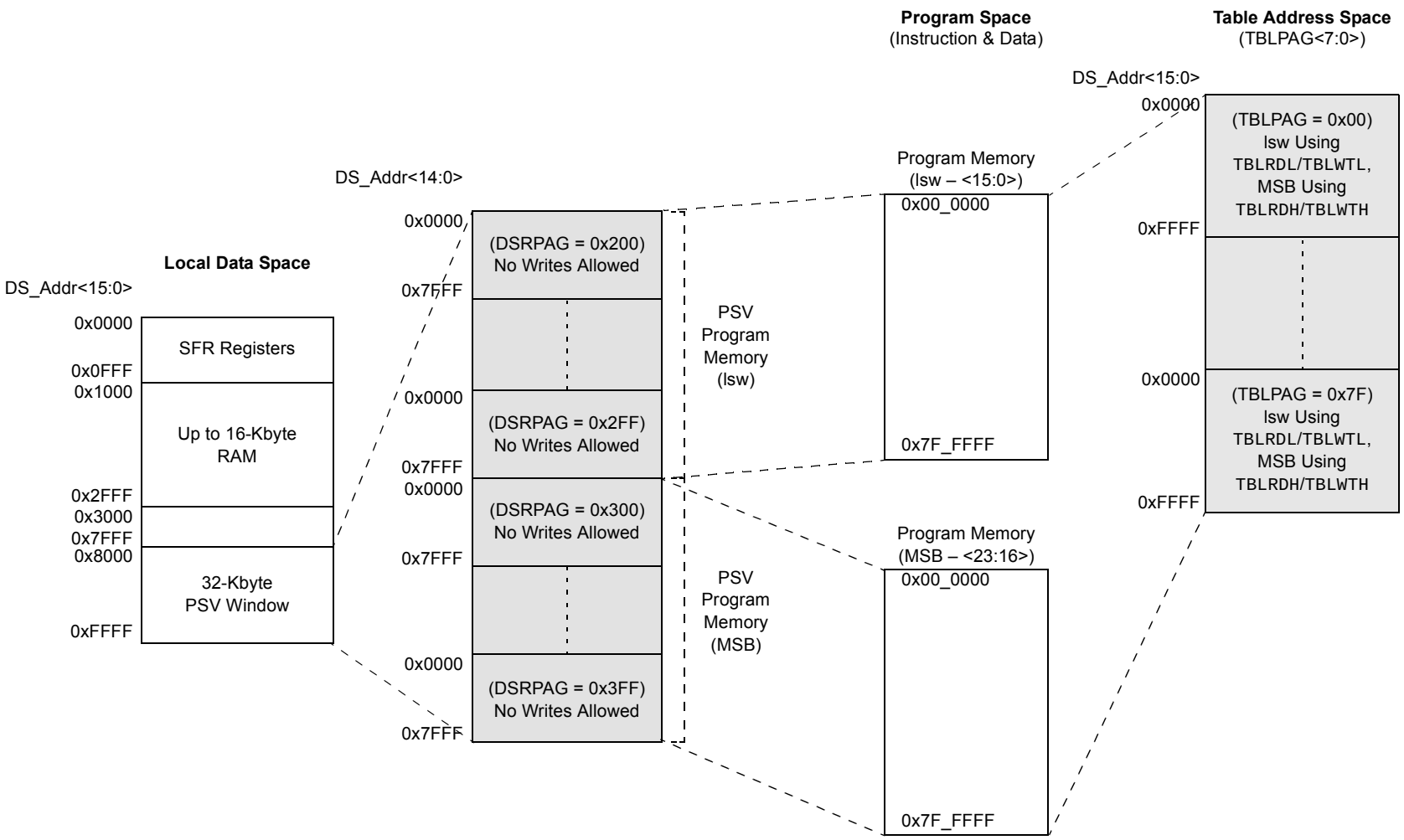

© 2017-2018 Microchip Technology Inc.

When a PSV page overflow or underflow occurs, EA<15> is cleared as a result of the register indirect EA calculation. An overflow or underflow of the EA in the PSV pages can occur at the page boundaries when:

- The initial address, prior to modification, addresses the PSV page
- The EA calculation uses Pre- or Post-Modified Register Indirect Addressing; however, this does not include Register Offset Addressing

In general, when an overflow is detected, the DSRPAG register is incremented and the EA<15> bit is set to keep the base address within the PSV window. When an underflow is detected, the DSRPAG register is decremented and the EA<15> bit is set to keep the base address within the PSV window. This creates a linear PSV address space, but only when using Register Indirect Addressing modes.

Exceptions to the operation described above arise when entering and exiting the boundaries of Page 0 and PSV spaces. Table 3-19 lists the effects of overflow and underflow scenarios at different boundaries.

In the following cases, when overflow or underflow occurs, the EA<15> bit is set and the DSRPAG is not modified; therefore, the EA will wrap to the beginning of the current page:

- Register Indirect with Register Offset Addressing
- Modulo Addressing
- Bit-Reversed Addressing

TABLE 3-19: OVERFLOW AND UNDERFLOW SCENARIOS AT PAGE 0 AND PSV SPACE BOUNDARIES(2,3,4)

O/U, R/W	Operation	Before			After		
		DSRPAG	DS EA<15>	Page Description	DSRPAG	DS EA<15>	Page Description
O, Read	[++Wn] or [Wn++]	DSRPAG = 0x2FF	1	PSV: Last lsw page	DSRPAG = 0x300	1	PSV: First MSB page
O, Read		DSRPAG = 0x3FF	1	PSV: Last MSB page	DSRPAG = 0x3FF	0	See **Note 1**
U, Read	[--Wn] or [Wn--]	DSRPAG = 0x001	1	PSV page	DSRPAG = 0x001	0	See **Note 1**
U, Read		DSRPAG = 0x200	1	PSV: First lsw page	DSRPAG = 0x200	0	See **Note 1**
U, Read		DSRPAG = 0x300	1	PSV: First MSB page	DSRPAG = 0x2FF	1	PSV: Last lsw page

Legend: O = Overflow, U = Underflow, R = Read, W = Write

Note 1: The Register Indirect Addressing now addresses a location in the base Data Space (0x0000-0x8000).

2: An EDS access, with DSRPAG = 0x000, will generate an address error trap.

3: Only reads from PS are supported using DSRPAG.

4: Pseudolinear Addressing is not supported for large offsets.

© 2017-2018 Microchip Technology Inc.

3.2.5.2 Extended X Data Space

The lower portion of the base address space range, between 0x0000 and 0x7FFF, is always accessible, regardless of the contents of the Data Space Read Page register. It is indirectly addressable through the register indirect instructions. It can be regarded as being located in the default EDS Page 0 (i.e., EDS address range of 0x000000 to 0x007FFF with the base address bit, EA<15> = 0, for this address range). However, Page 0 cannot be accessed through the upper 32 Kbytes, 0x8000 to 0xFFFF, of base Data Space in combination with DSRPAG = 0x00. Consequently, DSRPAG is initialized to 0x001 at Reset.

> **Note 1:** DSRPAG should not be used to access Page 0. An EDS access with DSRPAG set to 0x000 will generate an address error trap.
>
> **2:** Clearing the DSRPAG in software has no effect.

The remaining PSV pages are only accessible using the DSRPAG register in combination with the upper 32 Kbytes, 0x8000 to 0xFFFF, of the base address, where the base address bit, EA<15> = 1.

3.2.5.3 Software Stack

The W15 register serves as a dedicated Software Stack Pointer (SSP), and is automatically modified by exception processing, subroutine calls and returns; however, W15 can be referenced by any instruction in the same manner as all other W registers. This simplifies reading, writing and manipulating the Stack Pointer (for example, creating stack frames).

> **Note:** To protect against misaligned stack accesses, W15<0> is fixed to '0' by the hardware.

W15 is initialized to 0x1000 during all Resets. This address ensures that the SSP points to valid RAM in all dsPIC33CH128MP508 devices and permits stack availability for non-maskable trap exceptions. These can occur before the SSP is initialized by the user software. You can reprogram the SSP during initialization to any location within Data Space.

The Software Stack Pointer always points to the first available free word and fills the software stack, working from lower toward higher addresses. Figure 3-9 illustrates how it pre-decrements for a stack pop (read) and post-increments for a stack push (writes).

When the PC is pushed onto the stack, PC<15:0> are pushed onto the first available stack word, then PC<22:16> are pushed into the second available stack location. For a PC push during any CALL instruction, the MSB of the PC is zero-extended before the push, as shown in Figure 3-9. During exception processing, the MSB of the PC is concatenated with the lower eight bits of the CPU STATUS Register, SR. This allows the contents of SRL to be preserved automatically during interrupt processing.

> **Note 1:** To maintain system Stack Pointer (W15) coherency, W15 is never subject to (EDS) paging, and is therefore, restricted to an address range of 0x0000 to 0xFFFF. The same applies to the W14 when used as a Stack Frame Pointer (SFA = 1).
>
> **2:** As the stack can be placed in, and can access X and Y spaces, care must be taken regarding its use, particularly with regard to local automatic variables in a C development environment

FIGURE 3-9: CALL STACK FRAME

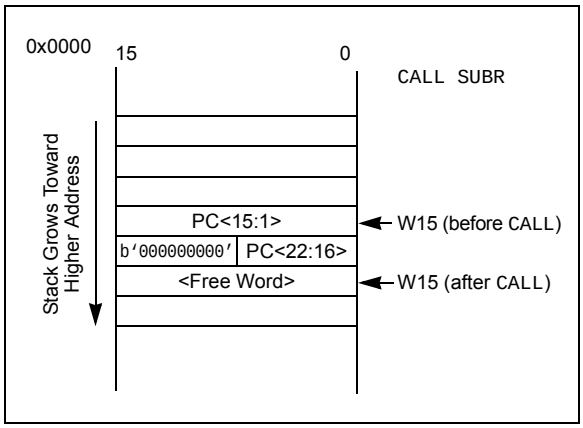

3.2.6 INSTRUCTION ADDRESSING MODES

The addressing modes shown in Table 3-20 form the basis of the addressing modes optimized to support the specific features of individual instructions. The addressing modes provided in the MAC class of instructions differ from those in the other instruction types.

3.2.6.1 File Register Instructions

Most file register instructions use a 13-bit address field (f) to directly address data present in the first 8192 bytes of data memory (Near Data Space). Most file register instructions employ a Working register, W0, which is denoted as WREG in these instructions. The destination is typically either the same file register or WREG (with the exception of the MUL instruction), which writes the result to a register or register pair. The MOV instruction allows additional flexibility and can access the entire Data Space.

3.2.6.2 MCU Instructions

The three-operand MCU instructions are of the form:

```
Operand 3 = Operand 1 <function> Operand 2
```

where Operand 1 is always a Working register (that is, the addressing mode can only be Register Direct), which is referred to as Wb. Operand 2 can be a W register fetched from data memory or a 5-bit literal. The result location can either be a W register or a data memory location. The following addressing modes are supported by MCU instructions:

- Register Direct
- Register Indirect
- Register Indirect Post-Modified
- Register Indirect Pre-Modified
- 5-Bit or 10-Bit Literal

Note: Not all instructions support all the addressing modes given above. Individual instructions can support different subsets of these addressing modes.

TABLE 3-20: FUNDAMENTAL ADDRESSING MODES SUPPORTED

Addressing Mode	Description
File Register Direct	The address of the file register is specified explicitly.
Register Direct	The contents of a register are accessed directly.
Register Indirect	The contents of Wn form the Effective Address (EA).
Register Indirect Post-Modified	The contents of Wn form the EA. Wn is post-modified (incremented or decremented) by a constant value.
Register Indirect Pre-Modified	Wn is pre-modified (incremented or decremented) by a signed constant value to form the EA.
Register Indirect with Register Offset (Register Indexed)	The sum of Wn and Wb forms the EA.
Register Indirect with Literal Offset	The sum of Wn and a literal forms the EA.

© 2017-2018 Microchip Technology Inc.

3.2.6.3 Move and Accumulator Instructions

Move instructions, and the DSP accumulator class of instructions, provide a greater degree of addressing flexibility than other instructions. In addition to the addressing modes supported by most MCU instructions, move and accumulator instructions also support Register Indirect with Register Offset Addressing mode, also referred to as Register Indexed mode.

> **Note:** For the MOV instructions, the addressing mode specified in the instruction can differ for the source and destination EA. However, the 4-bit Wb (Register Offset) field is shared by both source and destination (but typically only used by one).

In summary, the following addressing modes are supported by move and accumulator instructions:

- Register Direct
- Register Indirect
- Register Indirect Post-Modified
- Register Indirect Pre-Modified
- Register Indirect with Register Offset (Indexed)
- Register Indirect with Literal Offset
- 8-Bit Literal
- 16-Bit Literal

> **Note:** Not all instructions support all the addressing modes given above. Individual instructions may support different subsets of these addressing modes.

3.2.6.4 MAC Instructions

The dual source operand DSP instructions (CLR, ED, EDAC, MAC, MPY, MPY.N, MOVSAC and MSC), also referred to as MAC instructions, use a simplified set of addressing modes to allow the user application to effectively manipulate the Data Pointers through register indirect tables.

The two-source operand prefetch registers must be members of the set {W8, W9, W10, W11}. For data reads, W8 and W9 are always directed to the X RAGU, and W10 and W11 are always directed to the Y AGU. The Effective Addresses generated (before and after modification) must therefore, be valid addresses within X Data Space for W8 and W9, and Y Data Space for W10 and W11.

> **Note:** Register Indirect with Register Offset Addressing mode is available only for W9 (in X space) and W11 (in Y space).

In summary, the following addressing modes are supported by the MAC class of instructions:

- Register Indirect
- Register Indirect Post-Modified by 2
- Register Indirect Post-Modified by 4
- Register Indirect Post-Modified by 6
- Register Indirect with Register Offset (Indexed)

3.2.6.5 Other Instructions

Besides the addressing modes outlined previously, some instructions use literal constants of various sizes. For example, BRA (branch) instructions use 16-bit signed literals to specify the branch destination directly, whereas the DISI instruction uses a 14-bit unsigned literal field. In some instructions, such as ULNK, the source of an operand or result is implied by the opcode itself. Certain operations, such as a NOP, do not have any operands.

3.2.7 MODULO ADDRESSING

Modulo Addressing mode is a method of providing an automated means to support circular data buffers using hardware. The objective is to remove the need for software to perform data address boundary checks when executing tightly looped code, as is typical in many DSP algorithms.

Modulo Addressing can operate in either Data or Program Space (since the Data Pointer mechanism is essentially the same for both). One circular buffer can be supported in each of the X (which also provides the pointers into Program Space) and Y Data Spaces. Modulo Addressing can operate on any W Register Pointer. However, it is not advisable to use W14 or W15 for Modulo Addressing since these two registers are used as the Stack Frame Pointer and Stack Pointer, respectively.

In general, any particular circular buffer can be configured to operate in only one direction, as there are certain restrictions on the buffer start address (for incrementing buffers) or end address (for decrementing buffers), based upon the direction of the buffer.

The only exception to the usage restrictions is for buffers that have a power-of-two length. As these buffers satisfy the start and end address criteria, they can operate in a Bidirectional mode (that is, address boundary checks are performed on both the lower and upper address boundaries).

3.2.7.1 Start and End Address

The Modulo Addressing scheme requires that a starting and ending address be specified and loaded into the 16-bit Modulo Buffer Address registers: XMODSRT, XMODEND, YMODSRT and YMODEND (see Table 3-4).

> **Note:** Y space Modulo Addressing EA calculations assume word-sized data (LSb of every EA is always clear).

The length of a circular buffer is not directly specified. It is determined by the difference between the corresponding start and end addresses. The maximum possible length of the circular buffer is 32K words (64 Kbytes).

3.2.7.2 W Address Register Selection

The Modulo and Bit-Reversed Addressing Control register, MODCON<15:0>, contains enable flags, as well as a W register field to specify the W Address registers. The XWM and YWM fields select the registers that operate with Modulo Addressing:

- If XWM = `1111`, X RAGU and X WAGU Modulo Addressing is disabled
- If YWM = `1111`, Y AGU Modulo Addressing is disabled

The X Address Space Pointer W (XWM) register, to which Modulo Addressing is to be applied, is stored in MODCON<3:0> (see Table 3.2.1). Modulo Addressing is enabled for X Data Space when XWM is set to any value other than ‘`1111`’ and the XMODEN bit is set (MODCON<15>).

The Y Address Space Pointer W (YWM) register, to which Modulo Addressing is to be applied, is stored in MODCON<7:4>. Modulo Addressing is enabled for Y Data Space when YWM is set to any value other than ‘`1111`’ and the YMODEN bit (MODCON<14>) is set.

FIGURE 3-10: MODULO ADDRESSING OPERATION EXAMPLE

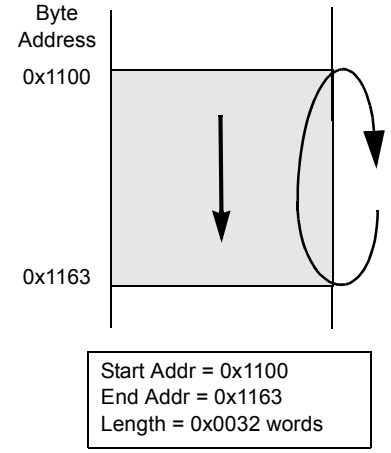


```
MOV     #0x1100, W0
MOV     W0, XMODSRT     ;set modulo start address
MOV     #0x1163, W0
MOV     W0, MODEND      ;set modulo end address
MOV     #0x8001, W0
MOV     W0, MODCON      ;enable W1, X AGU for modulo

MOV     #0x0000, W0     ;W0 holds buffer fill value

MOV     #0x1110, W1     ;point W1 to buffer

DO      AGAIN, #0x31    ;fill the 50 buffer locations
MOV     W0, [W1++]      ;fill the next location
AGAIN:  INC W0, W0      ;increment the fill value
```


© 2017-2018 Microchip Technology Inc.

3.2.7.3 Modulo Addressing Applicability

Modulo Addressing can be applied to the Effective Address (EA) calculation associated with any W register. Address boundaries check for addresses equal to:

- The upper boundary addresses for incrementing buffers
- The lower boundary addresses for decrementing buffers

It is important to realize that the address boundaries check for addresses less than, or greater than, the upper (for incrementing buffers) and lower (for decrementing buffers) boundary addresses (not just equal to). Address changes can, therefore, jump beyond boundaries and still be adjusted correctly.

Note:	The modulo corrected Effective Address is written back to the register only when Pre-Modify or Post-Modify Addressing mode is used to compute the Effective Address. When an address offset (such as [W7 + W2]) is used, Modulo Addressing correction is performed, but the contents of the register remain unchanged.

3.2.8 BIT-REVERSED ADDRESSING

Bit-Reversed Addressing mode is intended to simplify data reordering for radix-2 FFT algorithms. It is supported by the X AGU for data writes only.

The modifier, which can be a constant value or register contents, is regarded as having its bit order reversed. The address source and destination are kept in normal order. Thus, the only operand requiring reversal is the modifier.

3.2.8.1 Bit-Reversed Addressing Implementation

Bit-Reversed Addressing mode is enabled in any of these situations:

- BWMx bits (W register selection) in the MODCON register are any value other than ‘1111’ (the stack cannot be accessed using Bit-Reversed Addressing)
- The BREN bit is set in the XBREV register
- The addressing mode used is Register Indirect with Pre-Increment or Post-Increment

If the length of a bit-reversed buffer is $M = 2^N$ bytes, the last ‘N’ bits of the data buffer start address must be zeros.

XB<14:0> is the Bit-Reversed Addressing modifier, or ‘pivot point’, which is typically a constant. In the case of an FFT computation, its value is equal to half of the FFT data buffer size.

Note:	All bit-reversed EA calculations assume word-sized data (LSb of every EA is always clear). The XB value is scaled accordingly to generate compatible (byte) addresses.

When enabled, Bit-Reversed Addressing is executed only for Register Indirect with Pre-Increment or Post-Increment Addressing and word-sized data writes. It does not function for any other addressing mode or for byte-sized data and normal addresses are generated instead. When Bit-Reversed Addressing is active, the W Address Pointer is always added to the address modifier (XB) and the offset associated with the Register Indirect Addressing mode is ignored. In addition, as word-sized data is a requirement, the LSb of the EA is ignored (and always clear).

Note:	Modulo Addressing and Bit-Reversed Addressing can be enabled simultaneously using the same W register, but Bit-Reversed Addressing operation will always take precedence for data writes when enabled.

If Bit-Reversed Addressing has already been enabled by setting the BREN (XBREV<15>) bit, a write to the XBREV register should not be immediately followed by an indirect read operation using the W register that has been designated as the Bit-Reversed Pointer.

FIGURE 3-11: BIT-REVERSED ADDRESSING EXAMPLE

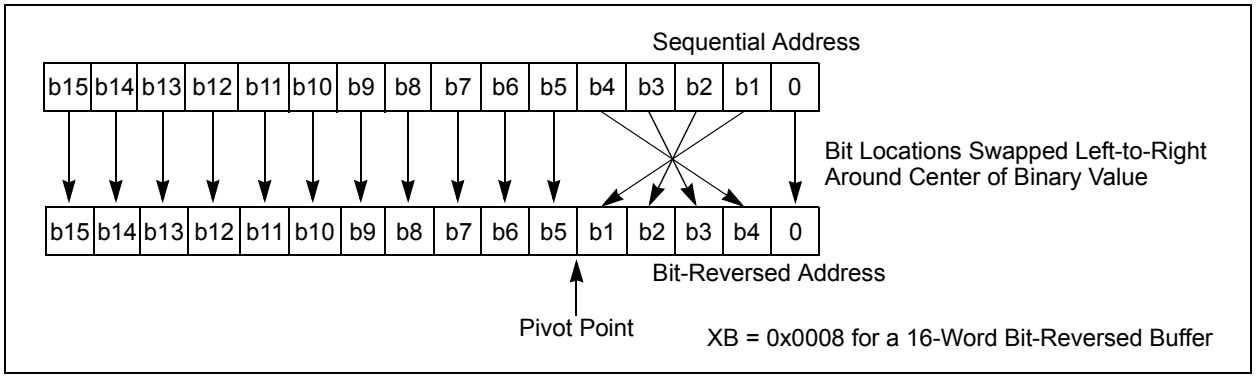

TABLE 3-21: BIT-REVERSED ADDRESSING SEQUENCE (16-ENTRY)

Normal Address					Bit-Reversed Address				
A3	A2	A1	A0	Decimal	A3	A2	A1	A0	Decimal
0	0	0	0	0	0	0	0	0	0
0	0	0	1	1	1	0	0	0	8
0	0	1	0	2	0	1	0	0	4
0	0	1	1	3	1	1	0	0	12
0	1	0	0	4	0	0	1	0	2
0	1	0	1	5	1	0	1	0	10
0	1	1	0	6	0	1	1	0	6
0	1	1	1	7	1	1	1	0	14
1	0	0	0	8	0	0	0	1	1
1	0	0	1	9	1	0	0	1	9
1	0	1	0	10	0	1	0	1	5
1	0	1	1	11	1	1	0	1	13
1	1	0	0	12	0	0	1	1	3
1	1	0	1	13	1	0	1	1	11
1	1	1	0	14	0	1	1	1	7
1	1	1	1	15	1	1	1	1	15

© 2017-2018 Microchip Technology Inc.

3.2.9 INTERFACING PROGRAM AND DATA MEMORY SPACES

The dsPIC33CH128MP508 family architecture uses a 24-bit wide Program Space (PS) and a 16-bit wide Data Space (DS). The architecture is also a modified Harvard scheme, meaning that data can also be present in the Program Space. To use this data successfully, it must be accessed in a way that preserves the alignment of information in both spaces.

Aside from normal execution, the architecture of the dsPIC33CH128MP508 family devices provides two methods by which Program Space can be accessed during operation:

- Using table instructions to access individual bytes or words anywhere in the Program Space
- Remapping a portion of the Program Space into the Data Space (Program Space Visibility)

Table instructions allow an application to read or write to small areas of the program memory. This capability makes the method ideal for accessing data tables that need to be updated periodically. It also allows access to all bytes of the program word. The remapping method allows an application to access a large block of data on a read-only basis, which is ideal for look-ups from a large table of static data. The application can only access the least significant word of the program word.

TABLE 3-22: PROGRAM SPACE ADDRESS CONSTRUCTION

Access Type	Access Space	Program Space Address				
		<23>	<22:16>	<15>	<14:1>	<0>
Instruction Access (Code Execution)	User	0	PC<22:1>			0
		0xxx xxxx xxxx xxxx xxxx xxx0				
TBLRD/TBLWT (Byte/Word Read/Write)	User	TBLPAG<7:0>		Data EA<15:0>		
		0xxx xxxx		xxxx xxxx xxxx xxxx		
	Configuration	TBLPAG<7:0>		Data EA<15:0>		
		1xxx xxxx		xxxx xxxx xxxx xxxx		

FIGURE 3-12: DATA ACCESS FROM PROGRAM SPACE ADDRESS GENERATION

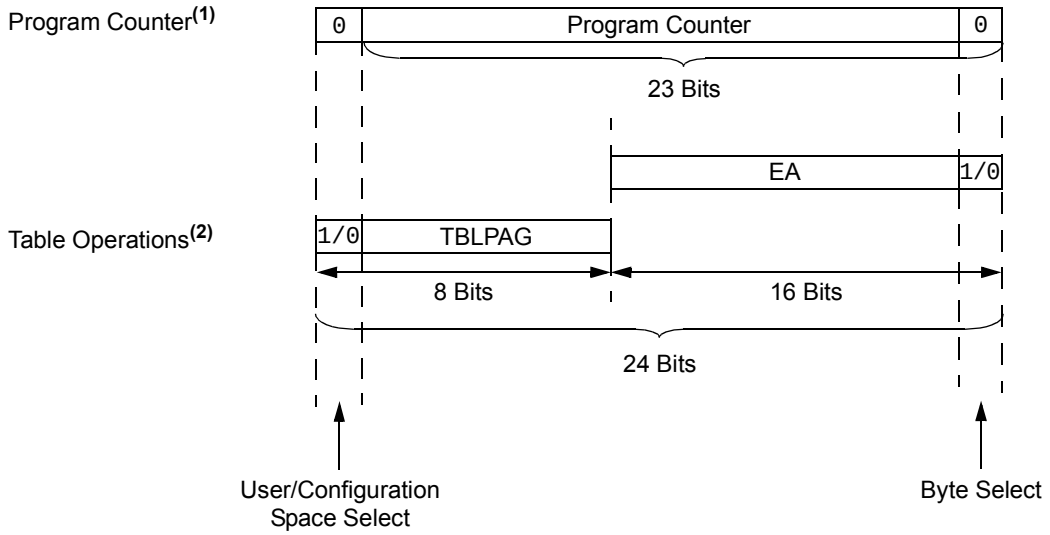

Note 1: The Least Significant bit (LSb) of Program Space addresses is always fixed as '0' to maintain word alignment of data in the Program and Data Spaces.

2: Table operations are not required to be word-aligned. Table Read operations are permitted in the configuration memory space.

3.2.9.1 Data Access from Program Memory Using Table Instructions

The TBLRDL and TBLWTL instructions offer a direct method of reading or writing the lower word of any address within the Program Space without going through Data Space. The TBLRDH and TBLWTH instructions are the only method to read or write the upper 8 bits of a Program Space word as data.

The PC is incremented by two for each successive 24-bit program word. This allows program memory addresses to directly map to Data Space addresses. Program memory can thus be regarded as two 16-bit wide word address spaces, residing side by side, each with the same address range. TBLRDL and TBLWTL access the space that contains the least significant data word. TBLRDH and TBLWTH access the space that contains the upper data byte.

Two table instructions are provided to move byte or word-sized (16-bit) data to and from Program Space. Both function as either byte or word operations.

- TBLRDL (Table Read Low):
  - In Word mode, this instruction maps the lower word of the Program Space location (P<15:0>) to a data address (D<15:0>)
  - In Byte mode, either the upper or lower byte of the lower program word is mapped to the lower byte of a data address. The upper byte is selected when Byte Select is '1'; the lower byte is selected when it is '0'.
- TBLRDH (Table Read High):
  - In Word mode, this instruction maps the entire upper word of a program address (P<23:16>) to a data address. The 'phantom' byte (D<15:8>) is always '0'.
  - In Byte mode, this instruction maps the upper or lower byte of the program word to D<7:0> of the data address in the TBLRDL instruction. The data is always '0' when the upper 'phantom' byte is selected (Byte Select = 1).

In a similar fashion, two table instructions, TBLWTH and TBLWTL, are used to write individual bytes or words to a Program Space address. The details of their operation are explained in **Section 3.3 "Master Flash Program Memory"**.

For all table operations, the area of program memory space to be accessed is determined by the Table Page register (TBLPAG). TBLPAG covers the entire program memory space of the device, including user application and configuration spaces. When TBLPAG<7> = 0, the table page is located in the user memory space. When TBLPAG<7> = 1, the page is located in configuration space.

FIGURE 3-13: ACCESSING PROGRAM MEMORY WITH TABLE INSTRUCTIONS

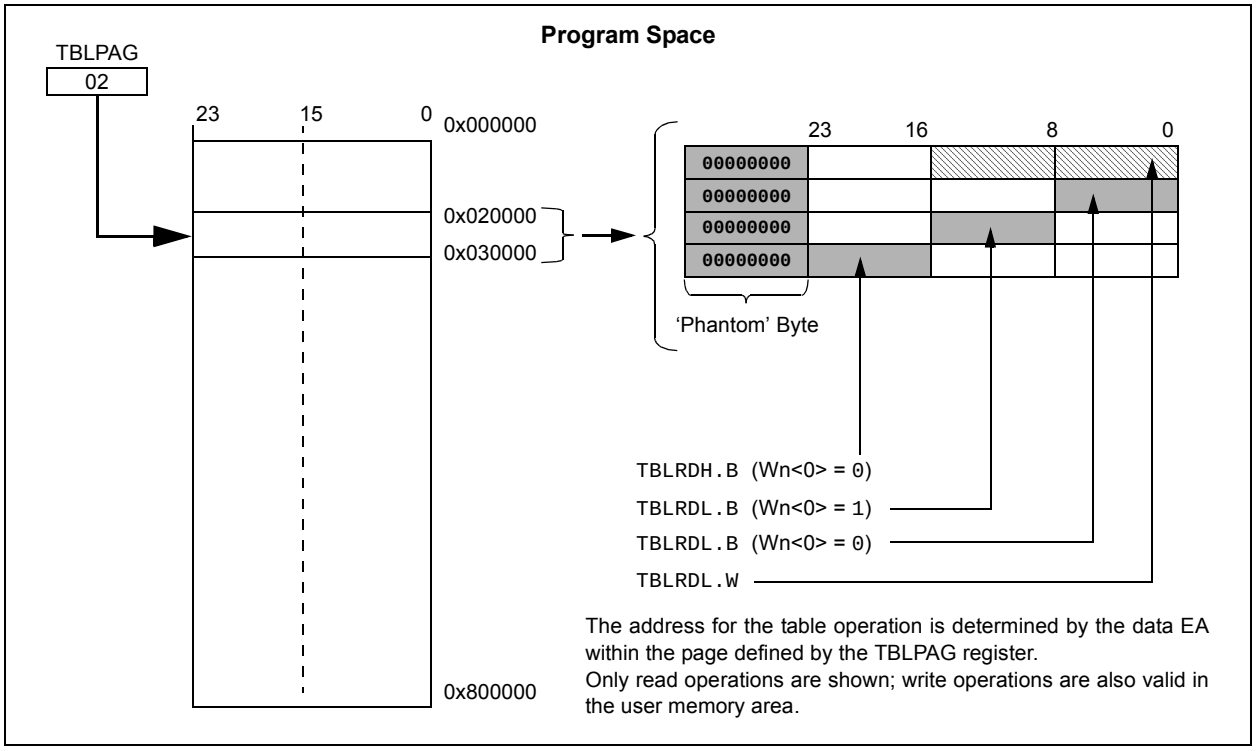

© 2017-2018 Microchip Technology Inc.

3.3 Master Flash Program Memory

Note 1: This data sheet summarizes the features of the dsPIC33CH128MP508 family of devices. It is not intended to be a comprehensive reference source. To complement the information in this data sheet, refer to **"Flash Programming"** (DS70609) in the *"dsPIC33/PIC24 Family Reference Manual"*, which is available from the Microchip web site (www.microchip.com).

2: This section refers to the **"Dual Partition Flash Program Memory"** (DS70005156) in the *"dsPIC33/PIC24 Family Reference Manual"*, but the Dual Partition is not implemented in the Master Flash.

The dsPIC33CH128MP508 family devices contain internal Flash program memory for storing and executing application code. The memory is readable, writable and erasable during normal operation over the entire VDD range.

Flash memory can be programmed in three ways:

- In-Circuit Serial Programming™ (ICSP™) programming capability
- Enhanced In-Circuit Serial Programming (Enhanced ICSP)
- Run-Time Self-Programming (RTSP)

ICSP allows for a dsPIC33CH128MP508 family device to be serially programmed while in the end application circuit. This is done with a Programming Clock and Programming Data (PGCx/PGDx) line, and three other lines for power (VDD), ground (VSS) and Master Clear ($\overline{\text{MCLR}}$). This allows customers to manufacture boards with unprogrammed devices and then program the device just before shipping the product. This also allows the most recent firmware or a custom firmware to be programmed.

Enhanced In-Circuit Serial Programming uses an on-board bootloader, known as the Program Executive, to manage the programming process. Using an SPI data frame format, the Program Executive can erase, program and verify program memory. For more information on Enhanced ICSP, see the device programming specification.

RTSP allows the Master Flash user application code to update itself during run time. The feature is capable of writing a single program memory word (two instructions) or an entire row as needed.

3.3.1 FLASH PROGRAMMING OPERATIONS

For ICSP and RTSP programming of the Master Flash, `TBLWTL` and `TBLWTH` instructions are used to write to the NVM write latches. An NVM write operation then writes the contents of both latches to the Flash, starting at the address defined by the contents of TBLPAG, and the NVMADR and NVMADRU registers.

Programmers can program two adjacent words (24 bits x 2) of Program Flash Memory at a time on every other word address boundary (0x000002, 0x000006, 0x00000A, etc.). To do this, it is necessary to erase the page that contains the desired address of the location the user wants to change. For protection against accidental operations, the write initiate sequence for NVMKEY must be used to allow any erase or program operation to proceed. After the programming command has been executed, the user application must wait for the programming time until programming is complete.

Regardless of the method used to program the Flash, a few basic requirements should be met:

- A full 48-bit double instruction word should always be programmed to a Flash location. Either instruction may simply be a `NOP` to fulfill this requirement. This ensures a valid ECC value is generated for each pair of instructions written.
- Assuming the above step is followed, the last 24-bit location in implemented program space should never be executed. The penultimate instruction must contain a program flow change instruction, such as a `RETURN` or `BRA` instruction.

FIGURE 3-14: ADDRESSING FOR TABLE REGISTERS

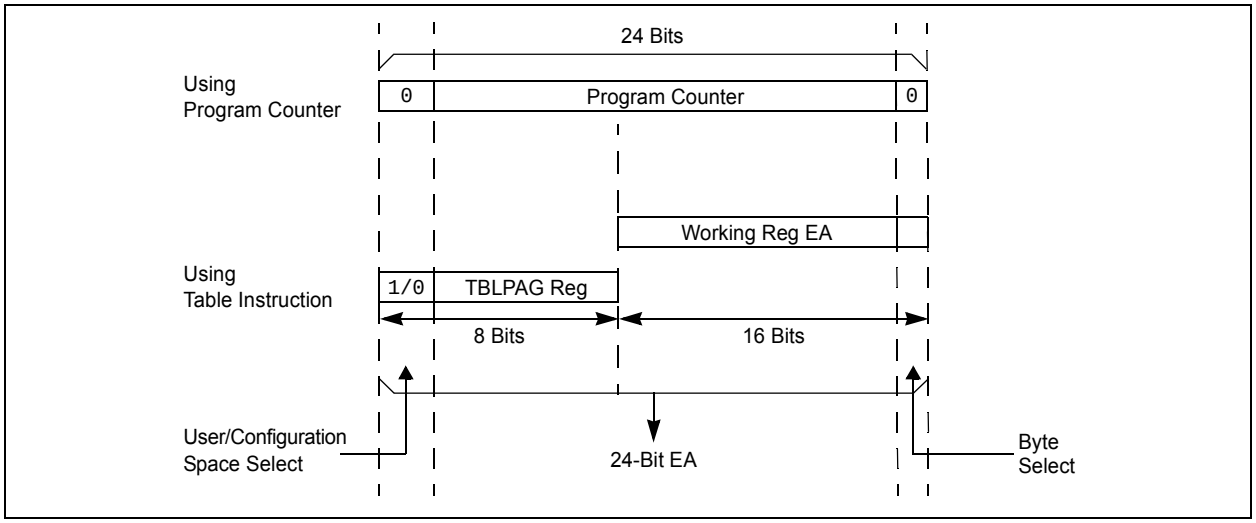

© 2017-2018 Microchip Technology Inc.

3.3.2 RTSP OPERATION

RTSP allows the user application to program one double instruction word or one row at a time.The double instruction word write blocks and single row write blocks are edge-aligned, from the beginning of program memory, on boundaries of one double instruction word and 64 double instruction words, respectively.

The basic sequence for RTSP programming is to first load two 24-bit instructions into the NVM write latches found in configuration memory space. Refer to Figure 3-3 through Figure 3-4 for write latch addresses. Then, the WR bit in the NVMCON register is set to initiate the write process. The processor stalls (waits) until the programming operation is finished. The WR bit is automatically cleared when the operation is finished.

Double instruction word writes are performed by manually loading both write latches, using `TBLWTL` and `TBLWTH` instructions, and then initiating the NVM write while the NVMOPx bits are set to '`0x1`'. The program space destination address is defined by the NVMADR/U registers.

EXAMPLE 3-1: FLASH WRITE/READ

```
////////Flash write ///////////////////////
//Sample code for writing 0x123456 to address locations  0x10000 / 10002
    NVMCON = 0x4001;
    TBLPAG = 0xFA;                    // write latch upper address
    NVMADR = 0x0000;                  // set target write address of general segment
    NVMADRU = 0x0001;
    __builtin_tblwtl(0, 0x3456);      // load write latches
    __builtin_tblwth (0,0x12);

    __builtin_tblwtl(2, 0x3456);      // load write latches
    __builtin_tblwth (2,0x12);

    asm volatile ("disi #5");
    __builtin_write_NVM();
    while(_WR == 1 ) ;


////////////Flash Read///////////////
//Sample code to read the Flash content of address 0x10000
// readDataL/ readDataH variables need to defined
    TBLPAG = 0x0001;
    readDataL = __builtin_tblrdl(0x0000);
    readDataH = __builtin_tblrdh(0x0000);
```

Row programming is performed by first loading 128 instructions into data RAM and then loading the address of the first instruction in that row into the NVMSRCADRL/H registers. Once the write has been initiated, the device will automatically load two instructions into the write latches and write them to the program space destination address defined by the NVMADR/U registers.

The operation will increment the NVMSRCADRL/H and the NVMADR/U registers until all double instruction words have been programmed.

The RPDF bit (NVMCON<9>) selects the format of the stored data in RAM to be either compressed or uncompressed. See Figure 3-15 for data formatting. Compressed data helps to reduce the amount of required RAM by using the upper byte of the second word for the MSB of the second instruction.

All erase and program operations may optionally use the NVM interrupt to signal the successful completion of the operation.

FIGURE 3-15: UNCOMPRESSED/ COMPRESSED FORMAT

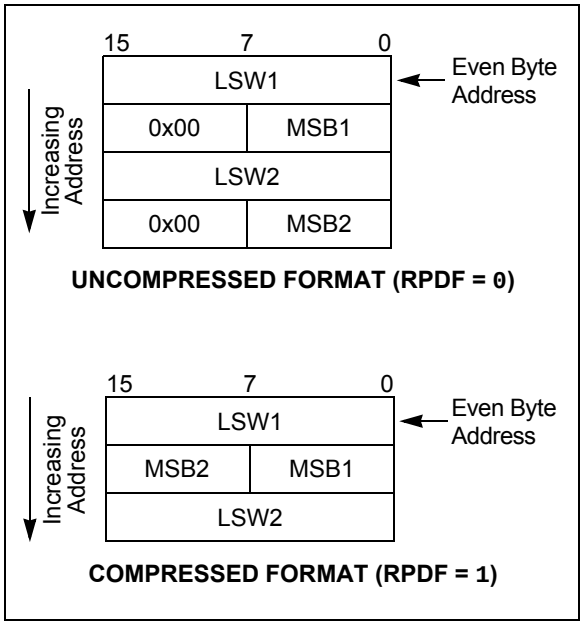

3.3.3 ERROR CORRECTING CODE (ECC)

In order to improve program memory performance and durability, the devices include Error Correcting Code functionality (ECC) as an integral part of the Flash memory controller. ECC can determine the presence of single bit errors in program data, including which bit is in error, and correct the data automatically without user intervention. ECC cannot be disabled.

When data is written to program memory, ECC generates a 7-bit Hamming code parity value for every two (24-bit) instruction words. The data is stored in blocks of 48 data bits and 7 parity bits; parity data is not memory-mapped and is inaccessible. When the data is read back, the ECC calculates the parity on it and compares it to the previously stored parity value. If a parity mismatch occurs, there are two possible outcomes:

- Single bit error has occurred and has been automatically corrected on readback.
- Double-bit error has occurred and the read data is not changed.

Single bit error occurrence can be identified by the state of the ECCSBEIF (IFS0<13>) bit. An interrupt can be generated when the corresponding interrupt enable bit is set, ECCSBEIE (IEC0<13>). The ECCSTATL register contains the parity information for single bit errors. The SECOUT<7:0> bit field contains the expected calculated SEC parity and SECIN<7:0> bits contain the actual value from a Flash read operation. The SECSYNDx bits (ECCSTATH<7:0>) indicate the bit position of the single bit error within the 48-bit pair of instruction words. When no error is present, SECINx equals SECOUTx and SECSYNDx is zero.

Double-bit errors result in a generic hard trap. The ECCDBE bit (INTCON4<1>) will be set to identify the source of the hard trap. If no Interrupt Service Routine is implemented for the hard trap, a device Reset will also occur. The ECCSTATH register contains double-bit error status information. The DEDOUT bit is the expected calculated DED parity and DEDIN is the actual value from a Flash read operation. When no error is present, DEDIN equals DEDOUT.

© 2017-2018 Microchip Technology Inc.

3.3.3.1 ECC Fault Injection

To test Fault handling, an EEC error can be generated. Both single and double-bit errors can be generated in both the read and write data paths. Read path Fault injection first reads the Flash data and then modifies it prior to entering the ECC logic. Write path Fault injection modifies the actual data prior to it being written into the target Flash and will cause an EEC error on subsequent Flash read. The following procedure is used to inject a Fault:

1. Load Flash target address into the ECCADDR register.
2. Select 1st Fault bit determined by FLT1PTRx (ECCCONH<7:0>). The target bit is inverted to create the Fault.
3. If a double Fault is desired, select the 2nd Fault bit determined by FLT2PTRx (ECCCONH<15:8>), otherwise set to all ‘1’s.
4. Write the NVMKEY unlock sequence.
5. Enable the ECC Fault injection logic by setting the FLTINJ bit (ECCCONL<0>)
6. Perform a read or write to the Flash target address.

3.3.4 CONTROL REGISTERS

Five SFRs are used to write and erase the Program Flash Memory: NVMCON, NVMKEY, NVMADR, NVMADRU and NVMSRCADRL/H.

The NVMCON register (Register 3-4) selects the operation to be performed (page erase, word/row program, Inactive Partition erase) and initiates the program or erase cycle.

NVMKEY (Register 3-7) is a write-only register that is used for write protection. To start a programming or erase sequence, the user application must consecutively write 0x55 and 0xAA to the NVMKEY register.

There are two NVM Address registers: NVMADR and NVMADRU. These two registers, when concatenated, form the 24-bit Effective Address (EA) of the selected word/row for programming operations, or the selected page for erase operations. The NVMADRU register is used to hold the upper 8 bits of the EA, while the NVMADR register is used to hold the lower 16 bits of the EA.

For row programming operation, data to be written to Program Flash Memory is written into data memory space (RAM) at an address defined by the NVMSRCADRL/H register (location of first element in row programming data).

3.3.5 NVM CONTROL REGISTERS

REGISTER 3-4: NVMCON: NONVOLATILE MEMORY (NVM) CONTROL REGISTER

R/SO-0(1)	R/W-0(1)	R/W-0(1)	R/W-0	U-0	U-0	R/W-0	R/C-0
WR	WREN	WRERR	NVMSIDL(2)	—	—	RPDF	URERR
bit 15							bit 8

U-0	U-0	U-0	U-0	R/W-0(1)	R/W-0(1)	R/W-0(1)	R/W-0(1)
—	—	—	—	NVMOP3(3,4)	NVMOP2(3,4)	NVMOP1(3,4)	NVMOP0(3,4)
bit 7							bit 0

Legend:	C = Clearable bit	SO = Settable Only bit	
R = Readable bit	W = Writable bit	U = Unimplemented bit, read as ‘0’	
-n = Value at POR	‘1’ = Bit is set	‘0’ = Bit is cleared	x = Bit is unknown

bit 15 **WR:** Write Control bit(1)
- 1 = Initiates a Flash memory program or erase operation; the operation is self-timed and the bit is cleared by hardware once the operation is complete
- 0 = Program or erase operation is complete and inactive

bit 14 **WREN:** Write Enable bit(1)
- 1 = Enables Flash program/erase operations
- 0 = Inhibits Flash program/erase operations

bit 13 **WRERR:** Write Sequence Error Flag bit(1)
- 1 = An improper program or erase sequence attempt, or termination has occurred (bit is set automatically on any set attempt of the WR bit)
- 0 = The program or erase operation completed normally

bit 12 **NVMSIDL:** NVM Stop in Idle Control bit(2)
- 1 = Flash voltage regulator goes into Standby mode during Idle mode
- 0 = Flash voltage regulator is active during Idle mode

bit 11-10 **Unimplemented:** Read as ‘0’

bit 9 **RPDF:** Row Programming Data Format bit
- 1 = Row data to be stored in RAM is in compressed format
- 0 = Row data to be stored in RAM is in uncompressed format

bit 8 **URERR:** Row Programming Data Underrun Error bit
- 1 = Indicates row programming operation has been terminated
- 0 = No data underrun error is detected

bit 7-4 **Unimplemented:** Read as ‘0’

Note 1: These bits can only be reset on a POR.

2: If this bit is set, there will be minimal power savings (I_{IDLE}), and upon exiting Idle mode, there is a delay (T_{VREG}) before Flash memory becomes operational.

3: All other combinations of NVMOP<3:0> are unimplemented.

4: Execution of the PWRSAV instruction is ignored while any of the NVM operations are in progress.

5: Two adjacent words on a 4-word boundary are programmed during execution of this operation.

© 2017-2018 Microchip Technology Inc.

REGISTER 3-4: NVMCON: NONVOLATILE MEMORY (NVM) CONTROL REGISTER (CONTINUED)

bit 3-0 **NVMOP<3:0>:** NVM Operation Select bits(1,3,4)

1111 = Reserved
1110 = User memory bulk erase operation
1101 = Reserved
1100 = Reserved
1011 = Reserved
1010 = Reserved
1001 = Reserved
1000 = Reserved
0111 = Reserved
0101 = Reserved
0100 = Reserved
0011 = Memory page erase operation
0010 = Memory row program operation
0001 = Memory double-word operation(5)
0000 = Reserved

Note 1: These bits can only be reset on a POR.

2: If this bit is set, there will be minimal power savings (IIDLE), and upon exiting Idle mode, there is a delay (TVREG) before Flash memory becomes operational.

3: All other combinations of NVMOP<3:0> are unimplemented.

4: Execution of the PWRSAV instruction is ignored while any of the NVM operations are in progress.

5: Two adjacent words on a 4-word boundary are programmed during execution of this operation.

REGISTER 3-5: NVMADR: NONVOLATILE MEMORY LOWER ADDRESS REGISTER

R/W-x	R/W-x	R/W-x	R/W-x	R/W-x	R/W-x	R/W-x	R/W-x
NVMADR<15:8>							
bit 15							bit 8

R/W-x	R/W-x	R/W-x	R/W-x	R/W-x	R/W-x	R/W-x	R/W-x
NVMADR<7:0>							
bit 7							bit 0

Legend:			
R = Readable bit	W = Writable bit	U = Unimplemented bit, read as ‘0’	
-n = Value at POR	‘1’ = Bit is set	‘0’ = Bit is cleared	x = Bit is unknown

bit 15-0 **NVMADR<15:0>:** Nonvolatile Memory Lower Write Address bits
Selects the lower 16 bits of the location to program or erase in Program Flash Memory. This register may be read or written to by the user application.

REGISTER 3-6: NVMADRU: NONVOLATILE MEMORY UPPER ADDRESS REGISTER

U-0	U-0	U-0	U-0	U-0	U-0	U-0	U-0
—	—	—	—	—	—	—	—
bit 15							bit 8

R/W-x	R/W-x	R/W-x	R/W-x	R/W-x	R/W-x	R/W-x	R/W-x
NVMADRU<23:16>							
bit 7							bit 0

Legend:			
R = Readable bit	W = Writable bit	U = Unimplemented bit, read as ‘0’	
-n = Value at POR	‘1’ = Bit is set	‘0’ = Bit is cleared	x = Bit is unknown

bit 15-8 **Unimplemented:** Read as ‘0’

bit 7-0 **NVMADRU<23:16>:** Nonvolatile Memory Upper Write Address bits
Selects the upper 8 bits of the location to program or erase in Program Flash Memory. This register may be read or written to by the user application.

© 2017-2018 Microchip Technology Inc.

REGISTER 3-7: NVMKEY: NONVOLATILE MEMORY KEY REGISTER

U-0	U-0	U-0	U-0	U-0	U-0	U-0	U-0
—	—	—	—	—	—	—	—
bit 15							bit 8

W-0	W-0	W-0	W-0	W-0	W-0	W-0	W-0
NVMKEY<7:0>							
bit 7							bit 0

Legend:			
R = Readable bit	W = Writable bit	U = Unimplemented bit, read as ‘0’	
-n = Value at POR	‘1’ = Bit is set	‘0’ = Bit is cleared	x = Bit is unknown

bit 15-8 **Unimplemented:** Read as ‘0’

bit 7-0 **NVMKEY<7:0>:** NVM Key Register bits (write-only)

REGISTER 3-8: NVMSRCADR: NVM SOURCE DATA ADDRESS REGISTER

R/W-0	R/W-0	R/W-0	R/W-0	R/W-0	R/W-0	R/W-0	R/W-0
NVMSRCADR<15:8>							
bit 15							bit 8

R/W-0	R/W-0	R/W-0	R/W-0	R/W-0	R/W-0	R/W-0	R/W-0
NVMSRCADR<7:0>							
bit 7							bit 0

Legend:			
R = Readable bit	W = Writable bit	U = Unimplemented bit, read as ‘0’	
-n = Value at POR	‘1’ = Bit is set	‘0’ = Bit is cleared	x = Bit is unknown

bit 15-0 **NVMSRCADR<15:0>:** NVM Source Data Address bits
The RAM address of the data to be programmed into Flash when the NVMOP<3:0> bits are set to row programming.

3.3.6 ECC CONTROL REGISTERS

REGISTER 3-9: ECCCONL: ECC FAULT INJECTION CONFIGURATION REGISTER LOW

U-0	U-0	U-0	U-0	U-0	U-0	U-0	U-0
—	—	—	—	—	—	—	—
bit 15							bit 8

U-0	U-0	U-0	U-0	U-0	U-0	U-0	R/W-0
—	—	—	—	—	—	—	FLTINMJ
bit 7							bit 0

Legend:			
R = Readable bit	W = Writable bit	U = Unimplemented bit, read as ‘0’	
-n = Value at POR	‘1’ = Bit is set	‘0’ = Bit is cleared	x = Bit is unknown

bit 15-1 **Unimplemented:** Read as ‘0’

bit 0 **FLTINJ:** Fault Injection Sequence Enable bit
1 = Enabled
0 = Disabled

REGISTER 3-10: ECCCONH: ECC FAULT INJECTION CONFIGURATION REGISTER HIGH

R/W-0	R/W-0	R/W-0	R/W-0	R/W-0	R/W-0	R/W-0	R/W-0
FLT2PTR<7:0>							
bit 15							bit 8

R/W-0	R/W-0	R/W-0	R/W-0	R/W-0	R/W-0	R/W-0	R/W-0
FLT1PTR<7:0>							
bit 7							bit 0

Legend:			
R = Readable bit	W = Writable bit	U = Unimplemented bit, read as ‘0’	
-n = Value at POR	‘1’ = Bit is set	‘0’ = Bit is cleared	x = Bit is unknown

bit 15-8 **FLT2PTR<7:0>:** ECC Fault Injection Bit Pointer 2
11111111-00111000 = No Fault injection occurs
00110111 = Fault injection (bit inversion) occurs on bit 55 of ECC bit order
...
00000001 = Fault injection (bit inversion) occurs on bit 1 of ECC bit order
00000000 = Fault injection (bit inversion) occurs on bit 0 of ECC bit order

bit 7-0 **FLT1PTR<7:0>:** ECC Fault Injection Bit Pointer 1
11111111-00111000 = No Fault injection occurs
00110111 = Fault injection occurs on bit 55 of ECC bit order
...
00000001 = Fault injection occurs on bit 1 of ECC bit order
00000000 = Fault injection occurs on bit 0 of ECC bit order

© 2017-2018 Microchip Technology Inc.

REGISTER 3-11: ECCADDRL: ECC FAULT INJECT ADDRESS COMPARE REGISTER LOW

R/W-0	R/W-0	R/W-0	R/W-0	R/W-0	R/W-0	R/W-0	R/W-0
ECCADDR<15:8>							
bit 15							bit 8

R/W-0	R/W-0	R/W-0	R/W-0	R/W-0	R/W-0	R/W-0	R/W-0
ECCADDR<7:0>							
bit 7							bit 0

Legend:			
R = Readable bit	W = Writable bit	U = Unimplemented bit, read as ‘0’	
-n = Value at POR	‘1’ = Bit is set	‘0’ = Bit is cleared	x = Bit is unknown

bit 15-0 **ECCADDR<15:0>:** ECC Fault Injection NVM Address Match Compare bits

REGISTER 3-12: ECCADDRH: ECC FAULT INJECT ADDRESS COMPARE REGISTER HIGH

R/W-0	R/W-0	R/W-0	R/W-0	R/W-0	R/W-0	R/W-0	R/W-0
ECCADDR<31:24>							
bit 15							bit 8

R/W-0	R/W-0	R/W-0	R/W-0	R/W-0	R/W-0	R/W-0	R/W-0
ECCADDR<23:16>							
bit 7							bit 0

Legend:			
R = Readable bit	W = Writable bit	U = Unimplemented bit, read as ‘0’	
-n = Value at POR	‘1’ = Bit is set	‘0’ = Bit is cleared	x = Bit is unknown

bit 15-0 **ECCADDR<31:16>:** ECC Fault Injection NVM Address Match Compare bits

REGISTER 3-13: ECCSTATL: ECC SYSTEM STATUS DISPLAY REGISTER LOW

R-0	R-0	R-0	R-0	R-0	R-0	R-0	R-0
SECOUT<7:0>							
bit 15							bit 8

R-0	R-0	R-0	R-0	R-0	R-0	R-0	R-0
SECIN<7:0							
bit 7							bit 0

Legend:			
R = Readable bit	W = Writable bit	U = Unimplemented bit, read as ‘0’	
-n = Value at POR	‘1’ = Bit is set	‘0’ = Bit is cleared	x = Bit is unknown

bit 15-8 **SECOUT<7:0>:** Calculated Single Error Correction Parity Value bits

bit 7-0 **SECIN<7:0>:** Read Single Error Correction Parity Value bits
Bits are the actual parity value of a Flash read operation.

REGISTER 3-14: ECCSTATH: ECC SYSTEM STATUS DISPLAY REGISTER HIGH

U-0	U-0	U-0	U-0	U-0	U-0	R-0	R-0
—	—	—	—	—	—	DEDOUT	DEDIN
bit 15							bit 8

R-0	R-0	R-0	R-0	R-0	R-0	R-0	R-0
SECSYND<7:0>							
bit 7							bit 0

Legend:			
R = Readable bit	W = Writable bit	U = Unimplemented bit, read as ‘0’	
-n = Value at POR	‘1’ = Bit is set	‘0’ = Bit is cleared	x = Bit is unknown

bit 15-10 **Unimplemented:** Read as ‘0’

bit 9 **DEDOUT:** Calculated Dual Bit Error Detection Parity bit

bit 8 **DEDIN:** Read Dual Bit Error Detection Parity bit

bit 7-0 **SECSYND<7:0>:** Calculated ECC Syndrome Value bits
Indicates the bit location that contains the error.

© 2017-2018 Microchip Technology Inc.

3.4 Master Resets

Note 1: This data sheet summarizes the features of the dsPIC33CH128MP508 family of devices. It is not intended to be a comprehensive reference source. To complement the information in this data sheet, refer to **"Reset"** (DS70602) in the *"dsPIC33/PIC24 Family Reference Manual"*, which is available from the Microchip web site (www.microchip.com).

The Reset module combines all Reset sources and controls the device Master Reset Signal, $\overline{\text{SYSRST}}$. The following is a list of device Reset sources:

- POR: Power-on Reset
- BOR: Brown-out Reset
- $\overline{\text{MCLR}}$: Master Clear Pin Reset
- SWR: RESET Instruction
- WDTO: Watchdog Timer Time-out Reset
- CM: Configuration Mismatch Reset
- TRAPR: Trap Conflict Reset
- IOPUWR: Illegal Condition Device Reset
  - Illegal Opcode Reset
  - Uninitialized W Register Reset
  - Security Reset

A simplified block diagram of the Reset module is shown in Figure 3-16.

Any active source of Reset will make the $\overline{\text{SYSRST}}$ signal active. On system Reset, some of the registers associated with the CPU and peripherals are forced to a known Reset state, and some are unaffected.

Note: Refer to the specific peripheral section or **Section 3.2 "Master Memory Organization"** of this data sheet for register Reset states.

All types of device Reset set a corresponding status bit in the RCON register to indicate the type of Reset (see Register 3-15).

A POR clears all the bits, except for the BOR and POR bits (RCON<1:0>) that are set. The user application can set or clear any bit, at any time, during code execution. The RCON bits only serve as status bits. Setting a particular Reset status bit in software does not cause a device Reset to occur.

The RCON register also has other bits associated with the Watchdog Timer and device power-saving states. The function of these bits is discussed in other sections of this data sheet.

Note: The status bits in the RCON register should be cleared after they are read so that the next RCON register value after a device Reset is meaningful.

For all Resets, the default clock source is determined by the FNOSC<2:0> bits in the FOSCSEL Configuration register. The value of the FNOSCx bits is loaded into the NOSC<2:0> (OSCCON<10:8>) bits on Reset, which in turn, initializes the system clock.

FIGURE 3-16: MASTER RESET SYSTEM BLOCK DIAGRAM

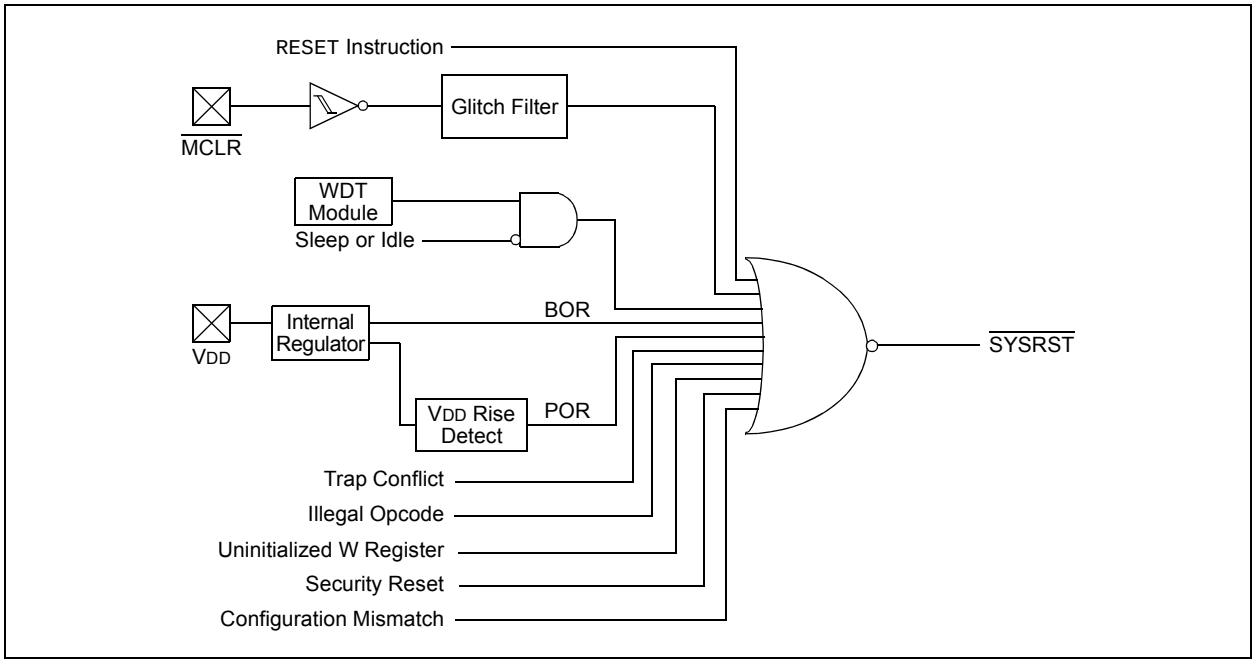

3.4.1 RESET RESOURCES

Many useful resources are provided on the main product page of the Microchip web site for the devices listed in this data sheet. This product page contains the latest updates and additional information.

3.4.1.1 Key Resources

- **"Reset"** (DS70602) in the *"dsPIC33/PIC24 Family Reference Manual"*
- Code Samples
- Application Notes
- Software Libraries
- Webinars
- All Related *"dsPIC33/PIC24 Family Reference Manual"* Sections
- Development Tools

© 2017-2018 Microchip Technology Inc.

3.4.2 RESET CONTROL REGISTER

REGISTER 3-15: RCON: RESET CONTROL REGISTER(1)

R/W-0	R/W-0	U-0	U-0	U-0	U-0	R/W-0	R/W-0
TRAPR	IOPUWR	—	—	—	—	CM	VREGS
bit 15							bit 8

R/W-0	R/W-0	U-0	R/W-0	R/W-0	R/W-0	R/W-1	R/W-1
EXTR	SWR	—	WDTO	SLEEP	IDLE	BOR	POR
bit 7							bit 0

Legend:			
R = Readable bit	W = Writable bit	U = Unimplemented bit, read as ‘0’	
-n = Value at POR	‘1’ = Bit is set	‘0’ = Bit is cleared	x = Bit is unknown

bit 15 **TRAPR:** Trap Reset Flag bit
1 = A Trap Conflict Reset has occurred
0 = A Trap Conflict Reset has not occurred

bit 14 **IOPUWR:** Illegal Opcode or Uninitialized W Register Access Reset Flag bit
1 = An illegal opcode detection, an illegal address mode or Uninitialized W register used as an Address Pointer caused a Reset
0 = An illegal opcode or Uninitialized W Register Reset has not occurred

bit 13-10 **Unimplemented:** Read as ‘0’

bit 9 **CM:** Configuration Mismatch Flag bit
1 = A Configuration Mismatch Reset has occurred.
0 = A Configuration Mismatch Reset has not occurred

bit 8 **VREGS:** Voltage Regulator Standby During Sleep bit
1 = Voltage regulator is active during Sleep
0 = Voltage regulator goes into Standby mode during Sleep

bit 7 **EXTR:** External Reset ($\overline{\text{MCLR}}$) Pin bit
1 = A Master Clear (pin) Reset has occurred
0 = A Master Clear (pin) Reset has not occurred

bit 6 **SWR:** Software RESET (Instruction) Flag bit
1 = A RESET instruction has been executed
0 = A RESET instruction has not been executed

bit 5 **Unimplemented:** Read as ‘0’

bit 4 **WDTO:** Watchdog Timer Time-out Flag bit
1 = WDT time-out has occurred
0 = WDT time-out has not occurred

bit 3 **SLEEP:** Wake-up from Sleep Flag bit
1 = Device has been in Sleep mode
0 = Device has not been in Sleep mode

bit 2 **IDLE:** Wake-up from Idle Flag bit
1 = Device has been in Idle mode
0 = Device has not been in Idle mode

bit 1 **BOR:** Brown-out Reset Flag bit
1 = A Brown-out Reset has occurred
0 = A Brown-out Reset has not occurred

Note 1: All of the Reset status bits can be set or cleared in software. Setting one of these bits in software does not cause a device Reset.

REGISTER 3-15: RCON: RESET CONTROL REGISTER(1) (CONTINUED)

bit 0 **POR:** Power-on Reset Flag bit
1 = A Power-on Reset has occurred
0 = A Power-on Reset has not occurred

Note 1: All of the Reset status bits can be set or cleared in software. Setting one of these bits in software does not cause a device Reset.

© 2017-2018 Microchip Technology Inc.

3.5 Master Interrupt Controller

Note 1: This data sheet summarizes the features of the dsPIC33CH128MP508 family of devices. It is not intended to be a comprehensive reference source. To complement the information in this data sheet, refer to **"Interrupts"** (DS70000600) in the *"dsPIC33/PIC24 Family Reference Manual"*, which is available from the Microchip web site (www.microchip.com).

The dsPIC33CH128MP508 family interrupt controller reduces the numerous peripheral interrupt request signals to a single interrupt request signal to the dsPIC33CH128MP508 family CPU.

The interrupt controller has the following features:

- Six Processor Exceptions and Software Traps
- Seven User-Selectable Priority Levels
- Interrupt Vector Table (IVT) with a Unique Vector for each Interrupt or Exception Source
- Fixed Priority within a Specified User Priority Level
- Fixed Interrupt Entry and Return Latencies
- Alternate Interrupt Vector Table (AIVT) for Debug Support

3.5.1 INTERRUPT VECTOR TABLE

The dsPIC33CH128MP508 family Interrupt Vector Table (IVT), shown in Figure 3-17, resides in program memory, starting at location, 000004h. The IVT contains six non-maskable trap vectors and up to 246 sources of interrupts. In general, each interrupt source has its own vector. Each interrupt vector contains a 24-bit wide address. The value programmed into each interrupt vector location is the starting address of the associated Interrupt Service Routine (ISR).

Interrupt vectors are prioritized in terms of their natural priority. This priority is linked to their position in the vector table. Lower addresses generally have a higher natural priority. For example, the interrupt associated with Vector 0 takes priority over interrupts at any other vector address.

3.5.1.1 Alternate Interrupt Vector Table

The Alternate Interrupt Vector Table (AIVT), shown in Figure 3-18, is available only when the Boot Segment (BS) is defined and the AIVT has been enabled. To enable the Alternate Interrupt Vector Table, the Configuration bit, AIVTDIS in the FSEC register, must be programmed and the AIVTEN bit must be set (INTCON2<8> = 1). When the AIVT is enabled, all interrupt and exception processes use the alternate vectors instead of the default vectors. The AIVT begins at the start of the last page of the Boot Segment, defined by BSLIM<12:0>. The second half of the page is no longer usable space. The Boot Segment must be at least two pages to enable the AIVT.

Note: Although the Boot Segment must be enabled in order to enable the AIVT, application code does not need to be present inside of the Boot Segment. The AIVT (and IVT) will inherit the Boot Segment code protection.

The AIVT supports debugging by providing a means to switch between an application and a support environment without requiring the interrupt vectors to be reprogrammed. This feature also enables switching between applications for evaluation of different software algorithms at run time.

3.5.2 RESET SEQUENCE

A device Reset is not a true exception because the interrupt controller is not involved in the Reset process. The dsPIC33CH128MP508 family devices clear their registers in response to a Reset, which forces the PC to zero. The device then begins program execution at location, 0x000000. A GOTO instruction at the Reset address can redirect program execution to the appropriate start-up routine.

Note: Any unimplemented or unused vector locations in the IVT should be programmed with the address of a default interrupt handler routine that contains a RESET instruction.

FIGURE 3-17: dsPIC33CH128MP508 FAMILY MASTER INTERRUPT VECTOR TABLE

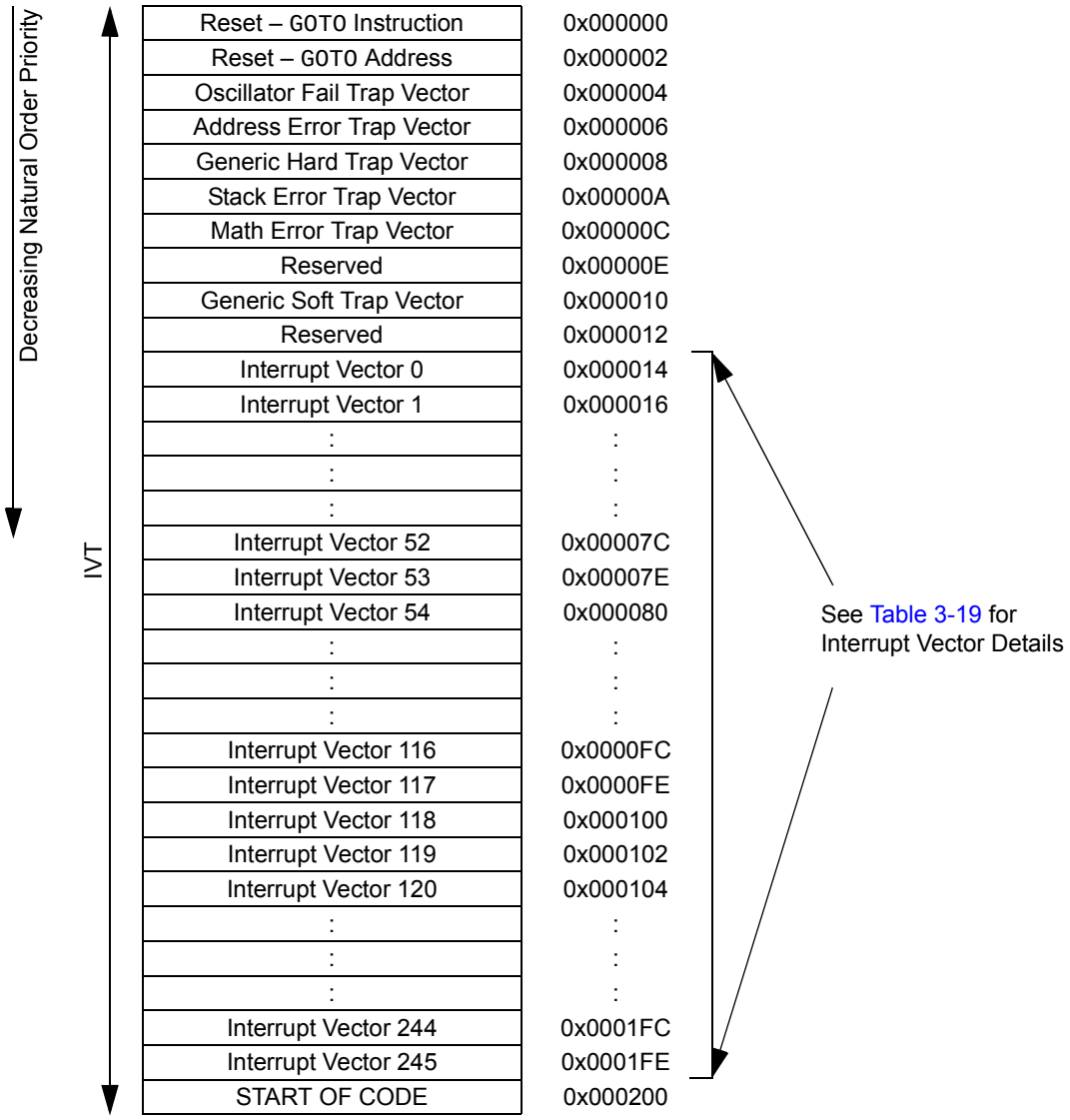

Note: In Dual Partition modes, each partition has a dedicated Interrupt Vector Table.

© 2017-2018 Microchip Technology Inc.

FIGURE 3-18: dsPIC33CH128MP508 ALTERNATE MASTER INTERRUPT VECTOR TABLE(2)

Decreasing Natural Order Priority

AIVT

Reserved	BSLIM<12:0>(1) + 0x000000
Reserved	BSLIM<12:0>(1) + 0x000002
Oscillator Fail Trap Vector	BSLIM<12:0>(1) + 0x000004
Address Error Trap Vector	BSLIM<12:0>(1) + 0x000006
Generic Hard Trap Vector	BSLIM<12:0>(1) + 0x000008
Stack Error Trap Vector	BSLIM<12:0>(1) + 0x00000A
Math Error Trap Vector	BSLIM<12:0>(1) + 0x00000C
Reserved	BSLIM<12:0>(1) + 0x00000E
Generic Soft Trap Vector	BSLIM<12:0>(1) + 0x000010
Reserved	BSLIM<12:0>(1) + 0x000012
Interrupt Vector 0	BSLIM<12:0>(1) + 0x000014
Interrupt Vector 1	BSLIM<12:0>(1) + 0x000016
:	:
:	:
:	:
Interrupt Vector 52	BSLIM<12:0>(1) + 0x00007C
Interrupt Vector 53	BSLIM<12:0>(1) + 0x00007E
Interrupt Vector 54	BSLIM<12:0>(1) + 0x000080
:	:
:	:
:	:
Interrupt Vector 116	BSLIM<12:0>(1) + 0x0000FC
Interrupt Vector 117	BSLIM<12:0>(1) + 0x0000FE
Interrupt Vector 118	BSLIM<12:0>(1) + 0x000100
Interrupt Vector 119	BSLIM<12:0>(1) + 0x000102
Interrupt Vector 120	BSLIM<12:0>(1) + 0x000104
:	:
:	:
:	:
Interrupt Vector 244	BSLIM<12:0>(1) + 0x0001FC
Interrupt Vector 245	BSLIM<12:0>(1) + 0x0001FE

See Table 3-19 for Interrupt Vector Details

Note 1: The address depends on the size of the Boot Segment defined by BSLIM<12:0>: [(BSLIM<12:0> – 1) x 0x800] + Offset.

2: In Dual Partition modes, each partition has a dedicated Alternate Interrupt Vector Table (if enabled).

TABLE 3-23: MASTER INTERRUPT VECTOR DETAILS

Interrupt Source	Vector #	IRQ #	IVT Address	Interrupt Bit Location		
				Flag	Enable	Priority
INT0 – External Interrupt 0	8	0	0x000014	IFS0<0>	IEC0<0>	IPC0<2:0>
T1 – Timer1	9	1	0x000016	IFS0<1>	IEC0<1>	IPC0<6:4>
CNA – Change Notice Interrupt A	10	2	0x000018	IFS0<2>	IEC0<2>	IPC0<10:8>
CNB – Change Notice Interrupt B	11	3	0x00001A	IFS0<3>	IEC0<3>	IPC0<14:12>
DMA0 – DMA Channel 0	12	4	0x00001C	IFS0<4>	IEC0<4>	IPC1<2:0>
Reserved	13	5	0x00001E	—	—	—
CCP1 – Input Capture/Output Compare 1	14	6	0x000020	IFS0<6>	IEC0<6>	IPC1<10:8>
CCT1 – CCP1 Timer	15	7	0x000022	IFS0<7>	IEC0<7>	IPC1<14:12>
DMA1 – DMA Channel 1	16	8	0x000024	IFS0<8>	IEC0<8>	IPC2<2:0>
SPI1RX – SPI1 Receiver	17	9	0x000026	IFS0<9>	IEC0<9>	IPC2<6:4>
SPI1TX – SPI1 Transmitter	18	10	0x000028	IFS0<10>	IEC0<10>	IPC2<10:8>
U1RX – UART1 Receiver	19	11	0x00002A	IFS0<11>	IEC0<11>	IPC2<14:12>
U1TX – UART1 Transmitter	20	12	0x00002C	IFS0<12>	IEC0<12>	IPC3<2:0>
ECCSBE – ECC Single Bit Error	21	13	0x00002E	IFS0<13>	IEC0<13>	IPC3<6:4>
NVM – NVM Write Complete	22	14	0x000030	IFS0<14>	IEC0<14>	IPC3<10:8>
INT1 – External Interrupt 1	23	15	0x000032	IFS0<15>	IEC0<15>	IPC3<14:12>
SI2C1 – I2C1 Slave Event	24	16	0x000034	IFS1<0>	IEC1<0>	IPC4<2:0>
MI2C1 – I2C1 Master Event	25	17	0x000036	IFS1<1>	IEC1<1>	IPC4<6:4>
DMA2 – DMA Channel 2	26	18	0x000038	IFS1<2>	IEC1<2>	IPC4<10:8>
CNC – Change Notice Interrupt C	27	19	0x00003A	IFS1<3>	IEC1<3>	IPC4<14:12>
INT2 – External Interrupt 2	28	20	0x00003C	IFS1<4>	IEC1<4>	IPC5<2:0>
DMA3 – DMA Channel 3	29	21	0x00003E	IFS1<5>	IEC1<5>	IPC5<6:4>
DMA4 – DMA Channel 4	30	22	0x000040	IFS1<6>	IEC1<6>	IPC5<10:8>
CCP2 – Input Capture/Output Compare 2	31	23	0x000042	IFS1<7>	IEC1<7>	IPC5<14:12>
CCT2 – CCP2 Timer	32	24	0x000044	IFS1<8>	IEC1<8>	IPC6<2:0>
CAN1 – CAN1 Combined Error	33	25	0x000046	IFS1<9>	IEC1<9>	IPC6<6:4>
INT3 – External Interrupt 3	34	26	0x000048	IFS1<10>	IEC1<10>	IPC6<10:8>
U2RX – UART2 Receiver	35	27	0x00004A	IFS1<11>	IEC1<11>	IPC6<14:12>
U2TX – UART2 Transmitter	36	28	0x00004C	IFS1<12>	IEC1<12>	IPC7<2:0>
SPI2RX – SPI2 Receiver	37	29	0x00004E	IFS1<13>	IEC1<13>	IPC7<6:4>
SPI2TX – SPI2 Transmitter	38	30	0x000050	IFS1<14>	IEC1<14>	IPC7<10:8>
C1RX – CAN1 RX Data Ready	39	31	0x000052	IFS1<15>	IEC1<15>	IPC7<14:12>
Reserved	40-41	32-33	0x000054-0x000056	—	—	—
DMA5 – DMA Channel 5	42	34	0x000058	IFS2<2>	IEC2<2>	IPC8<10:8>
CCP3 – Input Capture/Output Compare 3	43	35	0x00005A	IFS2<3>	IEC2<3>	IPC8<14:12>
CCT3 – CCP3 Timer	44	36	0x00005C	IFS2<4>	IEC2<4>	IPC9<2:0>
SI2C2 – I2C2 Slave Event	45	37	0x00005E	IFS2<5>	IEC2<5>	IPC9<6:4>
MI2C2 – I2C2 Master Event	46	38	0x000060	IFS2<6>	IEC2<6>	IPC9<10:8>
Reserved	47	39	0x000062	—	—	—
CCP4 – Input Capture/Output Compare 4	48	40	0x000064	IFS2<8>	IEC2<8>	IPC10<2:0>
CCT4 – CCP4 Timer	49	41	0x000066	IFS2<9>	IEC2<9>	IPC10<6:4>
Reserved	50	42	0x000068	—	—	—
CCP5 – Input Capture/Output Compare 5	51	43	0x00006A	IFS2<11>	IEC2<11>	IPC10<14:12>
CCT5 – CCP5 Timer	52	44	0x00006C	IFS2<12>	IEC2<12>	IPC11<2:0>
DMT – Deadman Timer	53	45	0x00006E	IFS2<13>	IEC2<13>	IPC11<6:4>
CCP6 – Input Capture/Output Compare 6	54	46	0x000070	IFS2<14>	IEC2<14>	IPC11<10:8>
CCT6 – CCP6 Timer	55	47	0x000072	IFS2<15>	IEC2<15>	IPC11<14:12>

© 2017-2018 Microchip Technology Inc.

TABLE 3-23: MASTER INTERRUPT VECTOR DETAILS (CONTINUED)

Interrupt Source	Vector #	IRQ #	IVT Address	Interrupt Bit Location		
				Flag	Enable	Priority
QEI1 – QEI Position Counter Compare	56	48	0x000074	IFS3<0>	IEC3<0>	IPC12<2:0>
U1E – UART1 Error	57	49	0x000076	IFS3<1>	IEC3<1>	IPC12<6:4>
U2E – UART2 Error	58	50	0x000078	IFS3<2>	IEC3<2>	IPC12<10:8>
CRC – CRC Generator	59	51	0x00007A	IFS3<3>	IEC3<3>	IPC12<14:12>
C1TX – CAN1 TX Data Request	60	52	0x00007C	IFS3<4>	IEC3<4>	IPC13<2:0>
Reserved	61-68	53-68	0x00007E-0x00008C	—	—	—
ICD – In-Circuit Debugger	69	61	0x00008E	IFS3<13>	IEC3<13>	IPC15<6:4>
JTAG – JTAG Programming	70	62	0x000090	IFS3<14>	IEC3<14>	IPC15<10:8>
PTGSTEP – PTG Step	71	63	0x000092	IFS3<15>	IEC3<15>	IPC15<14:12>
I2C1BC – I2C1 Bus Collision	72	64	0x000094	IFS4<0>	IEC4<0>	IPC16<2:0>
I2C2BC – I2C2 Bus Collision	73	65	0x000096	IFS4<1>	IEC4<1>	IPC16<6:4>
Reserved	74	66	0x000098	—	—	—
PWM1 – PWM Generator 1	75	67	0x00009A	IFS4<3>	IEC4<3>	IPC16<14:12>
PWM2 – PWM Generator 2	76	68	0x00009C	IFS4<4>	IEC4<4>	IPC17<2:0>
PWM3 – PWM Generator 3	77	69	0x00009E	IFS4<5>	IEC4<5>	IPC17<6:4>
PWM4 – PWM Generator 4	78	70	0x0000A0	IFS4<6>	IEC4<6>	IPC17<10:8>
Reserved	79-82	71-74	0x0000A2	—	—	—
CND – Change Notice D	83	75	0x0000AA	IFS4<11>	IEC4<11>	IPC18<14:12>
CNE – Change Notice E	84	76	0x0000AC	IFS4<12>	IEC4<12>	IPC19<2:0>
CMP1 – Comparator 1	85	77	0x0000AE	IFS4<13>	IEC4<13>	IPC19<6:4>
Reserved	86-88	78-80	0x0000B0-0x0000B4	—	—	—
PTGWDT – PTG Watchdog Timer Time-out	89	81	0x0000B6	IFS5<1>	IEC5<1>	IPC20<6:4>
PTG0 – PTG Trigger 0	90	82	0x0000B8	IFS5<2>	IEC5<2>	IPC20<10:8>
PTG1 – PTG Trigger 1	91	83	0x0000BA	IFS5<3>	IEC5<3>	IPC20<14:12>
PTG2 – PTG Trigger 2	92	84	0x0000BC	IFS5<4>	IEC5<4>	IPC21<2:0>
PTG3 – PTG Trigger 3	93	85	0x0000BE	IFS5<5>	IEC5<6>	IPC21<6:4>
SENT1 – SENT1 TX/RX	94	86	0x0000C0	IFS5<6>	IEC5<6>	IPC21<10:8>
SENT1E – SENT1 Error	95	87	0x0000C2	IFS5<7>	IEC5<7>	IPC21<14:12>
SENT2 – SENT2 TX/RX	96	88	0x0000C4	IFS5<8>	IEC5<8>	IPC22<2:0>
SENT2E – SENT2 Error	97	89	0x0000C6	IFS5<9>	IEC5<9>	IPC22<6:4>
ADC – ADC Global Interrupt	98	90	0x0000C8	IFS5<10>	IEC5<10>	IPC22<10:8>
ADCAN0 – ADC AN0 Interrupt	99	91	0x0000CA	IFS5<11>	IEC5<11>	IPC22<14:12>
ADCAN1 – ADC AN1 Interrupt	100	92	0x0000CC	IFS5<12>	IEC5<12>	IPC23<2:0>
ADCAN2 – ADC AN2 Interrupt	101	93	0x0000CE	IFS5<13>	IEC5<13>	IPC23<6:4>
ADCAN3 – ADC AN3 Interrupt	102	94	0x0000D0	IFS5<14>	IEC5<14>	IPC23<10:8>
ADCAN4 – ADC AN4 Interrupt	103	95	0x0000D2	IFS5<15>	IEC5<15>	IPC23<14:12>
ADCAN5 – ADC AN5 Interrupt	104	96	0x0000D4	IFS6<0>	IEC6<0>	IPC24<2:0>
ADCAN6 – ADC AN6 Interrupt	105	97	0x0000D6	IFS6<1>	IEC6<1>	IPC24<6:4>
ADCAN7 – ADC AN7 Interrupt	106	98	0x0000D8	IFS6<2>	IEC6<2>	IPC24<10:8>
ADCAN8 – ADC AN8 Interrupt	107	99	0x0000DA	IFS6<3>	IEC6<3>	IPC24<14:12>
ADCAN9 – ADC AN9 Interrupt	108	100	0x0000DC	IFS6<4>	IEC6<4>	IPC25<2:0>
ADCAN10 – ADC AN10 Interrupt	109	101	0x0000DE	IFS6<5>	IEC6<5>	IPC25<6:4>
ADCAN11 – ADC AN11 Interrupt	110	102	0x0000E0	IFS6<6>	IEC6<6>	IPC25<10:8>
ADCAN12 – ADC AN12 Interrupt	111	103	0x0000E2	IFS6<7>	IEC6<7>	IPC25<14:12>
ADCAN13 – ADC AN13 Interrupt	112	104	0x0000E4	IFS6<8>	IEC6<8>	IPC26<2:0>
ADCAN14 – ADC AN14 Interrupt	113	105	0x0000E6	IFS6<9>	IEC6<9>	IPC26<6:4>
ADCAN15 – ADC AN15 Interrupt	114	106	0x0000E8	IFS6<10>	IEC6<10>	IPC26<10:8>

TABLE 3-23: MASTER INTERRUPT VECTOR DETAILS (CONTINUED)

Interrupt Source	Vector #	IRQ #	IVT Address	Interrupt Bit Location		
				Flag	Enable	Priority
ADCAN16 – ADC AN16 Interrupt	115	107	0x0000EA	IFS6<11>	IEC6<11>	IPC26<14:12>
ADCAN17 – ADC AN17 Interrupt	116	108	0x0000EC	IFS6<12>	IEC6<12>	IPC27<2:0>
ADCAN18 – ADC AN18 Interrupt	117	109	0x0000EE	IFS6<13>	IEC6<13>	IPC27<6:4>
ADCAN19 – ADC AN19 Interrupt	118	110	0x0000F0	IFS6<14>	IEC6<14>	IPC27<10:8>
ADCAN20 – ADC AN20 Interrupt	119	111	0x0000F2	IFS6<15>	IEC6<15>	IPC27<14:12>
Reserved	120-122	112-114	0x0000F4-0x0000F8	—	—	—
ADFLT – ADC Fault	123	115	0x0000FA	IFS7<3>	IEC7<3>	IPC28<14:12>
ADCMP0 – ADC Digital Comparator 0	124	116	0x0000FC	IFS7<4>	IEC7<4>	IPC29<2:0>
ADCMP1 – ADC Digital Comparator 1	125	117	0x0000FE	IFS7<5>	IEC7<5>	IPC29<6:4>
ADCMP2 – ADC Digital Comparator 2	126	118	0x000100	IFS7<6>	IEC7<6>	IPC29<10:8>
ADCMP3 – ADC Digital Comparator 3	127	119	0x000102	IFS7<7>	IEC7<7>	IPC29<14:12>
ADFLTR0 – ADC Oversample Filter 0	128	120	0x000104	IFS7<8>	IEC7<8>	IPC30<2:0>
ADFLTR1 – ADC Oversample Filter 1	129	121	0x000106	IFS7<9>	IEC7<9>	IPC30<6:4>
ADFLTR2 – ADC Oversample Filter 2	130	122	0x000108	IFS7<10>	IEC7<10>	IPC30<10:8>
ADFLTR3 – ADC Oversample Filter 3	131	123	0x00010A	IFS7<11>	IEC7<11>	IPC30<14:12>
CLC1P – CLC1 Positive Edge	132	124	0x00010C	IFS7<12>	IEC7<12>	IPC31<2:0>
CLC2P – CLC2 Positive Edge	133	125	0x00010E	IFS7<13>	IEC7<13>	IPC31<6:4>
SPI1G – SPI1 Error	134	126	0x000110	IFS7<14>	IEC7<14>	IPC31<10:8>
SPI2G – SPI2 Error	135	127	0x000112	IFS7<15>	IEC7<15>	IPC31<14:12>
Reserved	136	128	0x000114	—	—	—
MSIS1 – MSI Slave Initiated Interrupt	137	129	0x000116	IFS8<1>	IEC8<1>	IPC32<6:4>
MSIA – MSI Protocol A	138	130	0x000118	IFS8<2>	IEC8<2>	IPC32<10:8>
MSIB – MSI Protocol B	139	131	0x00011A	IFS8<3>	IEC8<3>	IPC32<14:12>
MSIC – MSI Protocol C	140	132	0x00011C	IFS8<4>	IEC8<4>	IPC33<2:0>
MSID – MSI Protocol D	141	133	0x00011E	IFS8<5>	IEC8<5>	IPC33<6:4>
MSIE – MSI Protocol E	142	134	0x000120	IFS8<6>	IEC8<6>	IPC33<10:8>
MSIF – MSI Protocol F	143	135	0x000122	IFS8<7>	IEC8<7>	IPC33<14:12>
MSIG – MSI Protocol G	144	136	0x000124	IFS8<8>	IEC8<8>	IPC34<2:0>
MSIH – MSI Protocol H	145	137	0x000126	IFS8<9>	IEC8<9>	IPC34<6:4>
MSIDT – Master Read FIFO Data Ready	146	138	0x000128	IFS8<10>	IEC8<10>	IPC34<10:8>
MSIWFE – Master Write FIFO Empty	147	139	0x00012A	IFS8<11>	IEC8<11>	IPC34<14:12>
MSIFLT – Read or Write FIFO Fault (Over/Underflow)	148	140	0x00012C	IFS8<12>	IEC8<12>	IPC35<2:0>
S1SRST – MSI Slave Reset	149	141	0x00012E	IFS8<13>	IEC8<13>	IPC35<6:4>
Reserved	150-153	142-145	0x000130-0x000136	—	—	—
S1BRK – Slave Break	154	146	0x000138	IFS9<2>	IEC9<2>	IPC36<10:8>
Reserved	155-156	147-148	0x00013A-0x00013C	—	—	—
CCP7 – Input Capture/Output Compare 7	157	149	0x00013E	IFS9<5>	IEC9<5>	IPC37<6:4>
CCT7 – CCP7 Timer	158	150	0x000140	IFS9<6>	IEC9<6>	IPC37<10:8>
Reserved	159	151	0x000142	—	—	—
CCP8 – Input Capture/Output Compare 8	160	152	0x000144	IFS9<8>	IEC9<8>	IPC38<2:0>
CCT8 – CCP8 Timer	161	153	0x000146	IFS9<9>	IEC9<9>	IPC38<6:4>
Reserved	162-164	154-156	0x000148-0x00014C	—	—	—
S1CLKF – Slave Clock Fail	165	157	0x00014E	IFS9<13>	IEC9<13>	IPC39<6:4>
Reserved	166-175	158-167	0x000150-0x000162	—	—	—
ADFIFO – ADC FIFO Ready	176	168	0x000164	IFS10<8>	IEC10<8>	IPC42<2:0>

© 2017-2018 Microchip Technology Inc.

TABLE 3-23: MASTER INTERRUPT VECTOR DETAILS (CONTINUED)

Interrupt Source	Vector #	IRQ #	IVT Address	Interrupt Bit Location		
				Flag	Enable	Priority
PEVTA – PWM Event A	177	169	0x000166	IFS10<9>	IEC10<9>	IPC42<6:4>
PEVTB – PWM Event B	178	170	0x000168	IFS10<10>	IEC10<10>	IPC42<10:8>
PEVTC – PWM Event C	179	171	0x00016A	IFS10<11>	IEC10<11>	IPC42<14:12>
PEVTD – PWM Event D	180	172	0x00016C	IFS10<12>	IEC10<12>	IPC43<2:0>
PEVTE – PWM Event E	181	173	0x00016E	IFS10<13>	IEC10<13>	IPC43<6:4>
PEVTF – PWM Event F	182	174	0x000170	IFS10<14>	IEC10<14>	IPC43<10:8>
CLC3P – CLC3 Positive Edge	183	175	0x000172	IFS10<15>	IEC10<15>	IPC43<14:12>
CLC4P – CLC4 Positive Edge	184	176	0x000174	IFS11<0>	IEC11<0	IPC44<2:0>
CLC1N – CLC1 Negative Edge	185	177	0x000176	IFS11<1>	IEC11<1	IPC44<6:4>
CLC2N – CLC2 Negative Edge	186	178	0x000178	IFS11<2>	IEC11<2	IPC44<10:8>
CLC3N – CLC3 Negative Edge	187	179	0x00017A	IFS11<3>	IEC11<3	IPC44<14:>12>
CLC4N – CLC4 Negative Edge	188	180	0x00017C	IFS11<4>	IEC11<4	IPC45<2:0>
Reserved	189-196	181-188	0x0017E-0x0018C	—	—	—
U1EVT – UART1 Event	197	189	0x00018E	IFS11<13>	IF2C11<13>	IPC47<6:4>
U2EVT – UART2 Event	198	190	0x000190	IFS11<14>	IF2C11<14>	IPC47<12:8>

TABLE 3-24: MASTER INTERRUPT FLAG REGISTERS

Register	Address	Bit 15	Bit14	Bit 13	Bit 12	Bit 11	Bit 10	Bit 9	Bit 8	Bit 7	Bit 6	Bit 5	Bit 4	Bit 3	Bit 2	Bit 1	Bit 0
IFS0	800h	INT1IF	NVMIF	ECCSBEIF	U1TXIF	U1RXIF	SPI1TXIF	SPI1RXIF	DMA1IF	CCT1IF	CCP1IF	—	DMA0IF	CNBIF	CNAIF	T1IF	INT0IF
IFS1	802h	C1RXIF	SPI2TXIF	SPI2RXIF	U2TXIF	U2RXIF	INT3IF	C1IF	CCT2IF	CCP2IF	DMA4IF	DMA3IF	INT2IF	CNCIF	DMA2IF	MI2C1IF	SI2C1IF
IFS2	804h	CCT6IF	CCP6IF	DMTIF	CCT5IF	CCP5IF	—	CCT4IF	CCP4IF	—	MI2C2IF	SI2C2IF	CCT3IF	CCP3IF	DMA5IF	—	—
IFS3	806h	PTGSTEPIF	JTAGIF	ICDIF	—	—	—	—	—	—	—	—	C1TXIF	CRCIF	U2EIF	U1EIF	QEI1IF
IFS4	808h	—	—	CMP1IF	CNEIF	CNDIF	—	—	—	—	PWM4IF	PWM3IF	PWM2IF	PWM1IF	—	I2C2BCIF	I2C1BCIF
IFS5	80Ah	ADCAN4IF	ADCAN3IF	ADCAN2IF	ADCAN1IF	ADCAN0IF	ADCIF	SENT2EIF	SENT2IF	SENT1EIF	SENT1IF	PTG3IF	PTG2IF	PTG1IF	PTG0IF	PTGWDTIF	—
IFS6	80Ch	ADCAN20IF	ADCAN19IF	ADCAN18IF	ADCAN17IF	ADCAN16IF	ADCAN15IF	ADCAN14IF	ADCAN13IF	ADCAN12IF	ADCAN11IF	ADCAN10IF	ADCAN9IF	ADCAN8IF	ADCAN7IF	ADCAN6IF	ADCAN5IF
IFS7	80Eh	SPI2GIF	SPI1GIF	CLC2PIF	CLC1PIF	ADFLTR3IF	ADFLTR2IF	ADFLTR1IF	ADFLTR0IF	ADCMP3IF	ADCMP2IF	ADCMP1IF	ADCMP0IF	ADFLTIF	—	—	—
IFS8	810h	—	—	S1SRSTIF	MSIFLTIF	MSIWFEIF	MSIDTIF	MSIHIF	MSIGIF	MSIFIF	MSIEIF	MSIDIF	MSICIF	MSIBIF	MSIAIF	MSIS1IF	—
IFS9	812h	—	—	S1CLKFIF	—	—	—	CCT8IF	CCP8IF	—	CCT7IF	CCP7IF	—	—	S1BRKIF	—	—
IFS10	814h	CLC3PIF	PEVTFIF	PEVTEIF	PEVTDIF	PEVTCIF	PEVTBIF	PEVTAIF	ADFIFOIF	—	—	—	—	—	—	—	—
IFS11	816h	—	U2EVTIF	U1EVTIF	—	—	—	—	—	—	—	—	CLC4NIF	CLC3NIF	CLC2NPIF	CLC1NIF	CLC4PIF

Legend: — = Unimplemented.

TABLE 3-25: MASTER INTERRUPT ENABLE REGISTERS

Register	Address	Bit 15	Bit14	Bit 13	Bit 12	Bit 11	Bit 10	Bit 9	Bit 8	Bit 7	Bit 6	Bit 5	Bit 4	Bit 3	Bit 2	Bit 1	Bit 0
IEC0	820h	INT1IE	NVMIE	ECCSBEIE	U1TXIE	U1RXIE	SPI1TXIE	SPI1RXIE	DMA1IE	CCT1IE	CCP1IE	—	DMA0IE	CNBIE	CNAIE	T1IE	INT0IE
IEC1	822h	C1RXIE	SPI2TXIE	SPI2RXIE	U2TXIE	U2RXIE	INT3IE	C1IE	CCT2IE	CCP2IE	DMA4IE	DMA3IE	INT2IE	CNCIE	DMA2IE	MI2C1IE	SI2C1IE
IEC2	824h	CCT6IE	CCP6IE	DMTIE	CCT5IE	CCP5IE	—	CCT4IE	CCP4IE	—	MI2C2IE	SI2C2IE	CCT3IE	CCP3IE	DMA5IE	—	—
IEC3	826h	PTGSTEPIE	JTAGIE	ICDIE	—	—	—	—	—	—	—	—	C1TXIE	CRCIE	U2EIE	U1EIE	QEI1IE
IEC4	828h	—	—	CMP1IE	CNEIE	CNDIE	—	—	—	—	PWM4IE	PWM3IE	PWM2IE	PWM1IE	—	I2C2BCIE	I2C1BCIE
IEC5	82Ah	ADCAN4IE	ADCAN3IE	ADCAN2IE	ADCAN1IE	ADCAN0IE	ADCIE	SENT2EIE	SENT2IE	SENT1EIE	SENT1IE	PTG3IE	PTG2IE	PTG1IE	PTG0IE	PTGWDTIE	—
IEC6	82Ch	ADCAN20IE	ADCAN19IE	ADCAN18IE	ADCAN17IE	ADCAN16IE	ADCAN15IE	ADCAN14IE	ADCAN13IE	ADCAN12IE	ADCAN11IE	ADCAN10IE	ADCAN9IE	ADCAN8IE	ADCAN7IE	ADCAN6IE	ADCAN5IE
IEC7	82Eh	SPI2GIE	SPI1GIE	CLC2PIE	CLC1PIE	ADFLTR3IE	ADFLTR2IE	ADFLTR1IE	ADFLTR0IE	ADCMP3IE	ADCMP2IE	ADCMP1IE	ADCMP0IE	ADFLTIE	—	—	—
IEC8	830h	—	—	S1SRSTIE	MSIFLTIE	MSIWFEIE	MSIDTIE	MSIHIE	MSIGIE	MSIFIE	MSIEIE	MSIDIE	MSICIE	MSIBIE	MSIAIE	MSIS1IE	—
IEC9	832h	—	—	S1CLKFIE	—	—	—	CCT8IE	CCP8IE	—	CCT7IE	CCP7IE	—	—	S1BRKIE	—	—
IEC10	834h	CLC3PIE	PEVTFIE	PEVTEIE	PEVTDIE	PEVTCIE	PEVTBIE	PEVTAIE	ADFIFOIE	—	—	—	—	—	—	—	—
IEC11	836h	—	U2EVTIE	U1EVTIE	—	—	—	—	—	—	—	—	CLC4NIE	CLC3NIE	CLC2NIE	CLC1NIE	CLC4PIE

Legend: — = Unimplemented.

© 2017-2018 Microchip Technology Inc.

TABLE 3-26: MASTER INTERRUPT PRIORITY REGISTERS

Register	Address	Bit 15	Bit14	Bit 13	Bit 12	Bit 11	Bit 10	Bit 9	Bit 8	Bit 7	Bit 6	Bit 5	Bit 4	Bit 3	Bit 2	Bit 1	Bit 0
IPC0	840h	—	CNBIP2	CNBIP1	CNBIP0	—	CNAIP2	CNAIP1	CNAIP0	—	T1IP2	T1IP1	T1IP0	—	INT0IP2	INT0IP1	INT0IP0
IPC1	842h	—	CCT1IP2	CCT1IP1	CCT1IP0	—	CCP1IP2	CCP1IP1	CCP1IP0	—	—	—	—	—	DMA0IP2	DMA0IP1	DMA0IP0
IPC2	844h	—	U1RXIP2	U1RXIP1	U1RXIP0	—	SPI1TXIP2	SPI1TXIP1	SPI1TXIP0	—	SPI1RXIP2	SPI1RXIP1	SPI1RXIP0	—	DMA1IP2	DMA1IP1	DMA1IP0
IPC3	846h	—	INT1IP2	INT1IP1	INT1IP0	—	NVMIP2	NVMIP1	NVMIP0	—	ECCSBEIP2	ECCSBEIP1	ECCSBEIP0	—	U1TXIP2	U1TXIP1	U1TXIP0
IPC4	848h	—	CNCIP2	CNCIP1	CNCIP0	—	DMA2IP2	DMA2IP1	DMA2IP0	—	MI2C1IP2	MI2C1IP1	MI2C1IP0	—	SI2C1IP2	SI2C1IP1	SI2C1IP0
IPC5	84Ah	—	CCP2IP2	CCP2IP1	CCP2IP0	—	DMA4IP2	DMA4IP1	DMA4IP0	—	DMA3IP2	DMA3IP1	DMA3IP20	—	INT2IP2	INT2IP1	INT2IP0
IPC6	84Ch	—	U2RXIP2	U2RXIP1	U2RXIP0	—	INT3IP2	INT3IP1	INT3IP0	—	CAN1IP2	CAN1IP1	CAN1IP0	—	CCT2IP2	CCT2IP1	CCT2IP0
IPC7	84Eh	—	C1RXIP2	C1RXIP1	C1RXIP0	—	SPI2TXIP2	SPI2TXIP1	SPI2TXIP0	—	SPI2RXIP2	SPI2RXIP1	SPI2RXIP0	—	U2TXIP2	U2TXIP1	U2TXIP0
IPC8	850h	—	CCP3IP2	CCP3IP1	CCP3IP0	—	DMA5IP2	DMA5IP1	DMA5IP0	—	—	—	—	—	—	—	—
IPC9	852h	—	—	—	—	—	MI2C2IP2	MI2C2IP1	MI2C2IP0	—	SI2C2IP2	SI2C2IP1	SI2C2IP0	—	CCT3IP2	CCT3IP1	CCT3IP0
IPC10	854h	—	CCP5IP2	CCP5IP1	CCP5IP0	—	—	—	—	—	CCT4IP2	CCT4IP1	CCT4IP0	—	CCP4IP2	CCP4IP1	CCP4IP0
IPC11	856h	—	CCT6IP2	CCT6IP1	CCT6IP0	—	CCP6IP2	CCP6IP1	CCP6IP0	—	DMTIP2	DMTIP1	DMTIP0	—	CCT5IP2	CCT5IP1	CCT5IP0
IPC12	858h	—	CRCIP2	CRCIP1	CRCIP0	—	U2EIP2	U2EIP1	U2EIP0	—	U1EIP2	U1EIP1	U1EIP0	—	QEI1IP2	QEI1IP1	QEI1IP0
IPC13	85Ah	—	—	—	—	—	—	—	—	—	—	—	—	—	C1TXIP2	C1TXIP1	C1TXIP0
IPC14	85Ch	—	—	—	—	—	—	—	—	—	—	—	—	—			
IPC15	85Eh	—	PTGSTEPIP2	PTGSTEPIP1	PTGSTEPIP0	—	JTAGIP2	JTAGIP1	JTAGIP0	—	ICDIP2	ICDIP1	ICDIP0	—	—	—	—
IPC16	860h	—	PWM1IP2	PWM1IP1	PWM1IP0	—	—	—	—	—	I2C2BCIP2	I2C2BCIP1	I2C2BCIP0	—	I2C1BCIP2	I2C1BCIP1	I2C1BCIP0
IPC17	862h	—	—	—	—	—	PWM4IP2	PWM4IP1	PWM4IP0	—	PWM3IP2	PWM3IP1	PWM3IP0	—	PWM2IP2	PWM2IP1	PWM2IP0
IPC18	864h	—	CNDIP2	CNDIP1	CNDIP0	—	—	—	—	—	—	—	—	—	—	—	—
IPC19	866h	—	—	—	—	—	—	—	—	—	CMP1IP2	CMP1IP1	CMP1IP0	—	CNEIP2	CNEIP1	CNEIP0
IPC20	868h	—	PTG1IP2	PTG1IP1	PTG1IP0	—	PTG0IP2	PTG0IP1	PTG0IP0	—	PTGWDTIP2	PTGWDTIP1	PTGWDTIP0	—	—	—	—
IPC21	86Ah	—	SENT1EIP2	SENT1EIP1	SENT1EIP0	—	SENT1IP2	SENT1IP1	SENT1IP0	—	PTG3IP2	PTG3IP1	PTG3IP0	—	PTG2IP2	PTG2IP1	PTG2IP0
IPC22	86Ch	—	ADCAN0IP2	ADCAN0IP1	ADCAN0IP0	—	ADCIP2	ADCIP1	ADCIP0	—	SENT2EIP2	SENT2EIP1	SENT2EIP0	—	SENT2IP2	SENT2IP1	SENT2IP0
IPC23	86Eh	—	ADCAN4IP2	ADCAN4IP1	ADCAN4IP0	—	ADCAN3IP2	ADCAN3IP1	ADCAN3IP0	—	ADCAN2IP2	ADCAN2IP1	ADCAN2IP0	—	ADCAN1IP2	ADCAN1IP1	ADCAN1IP0
IPC24	870h	—	ADCAN8IP2	ADCAN8IP1	ADCAN8IP0	—	ADCAN7IP2	ADCAN7IP1	ADCAN7IP0	—	ADCAN6IP2	ADCAN6IP1	ADCAN6IP0	—	ADCAN5IP2	ADCAN5IP1	ADCAN5IP0
IPC25	872h	—	ADCAN12IP2	ADCAN12IP1	ADCAN12IP0	—	ADCAN11IP2	ADCAN11IP1	ADCAN11IP0	—	ADCAN10IP2	ADCAN10IP1	ADCAN10IP0	—	ADCAN9IP2	ADCAN9IP1	ADCAN9IP0
IPC26	874h	—	ADCAN16IP2	ADCAN16IP2	ADCAN16IP2	—	ADCAN15IP2	ADCAN15IP1	ADCAN15IP0	—	ADCAN14IP2	ADCAN14IP1	ADCAN14IP0	—	ADCAN13IP2	ADCAN13IP1	ADCAN13IP0
IPC27	876h	—	ADCAN20IP2	ADCAN20IP1	ADCAN20IP0	—	ADCAN19IP2	ADCAN19IP1	ADCAN19IP0	—	ADCAN18IP2	ADCAN18IP1	ADCAN18IP0	—	ADCAN17IP2	ADCAN17IP1	ADCAN17IP0
IPC28	878h	—	ADFLTIP2	ADFLTIP1	ADFLTIP0	—	—	—	—	—	—	—	—	—	—	—	—
IPC29	87Ah	—	ADCMP3IP2	ADCMP3IP1	ADCMP3IP0	—	ADCMP2IP2	ADCMP2IP1	ADCMP2IP0	—	ADCMP1IP2	ADCMP1IP1	ADCMP1IP0	—	ADCMP0IP2	ADCMP0IP1	ADCMP0IP0
IPC30	87Ch	—	ADFLTR3IP2	ADFLTR3IP1	ADFLTR3IP0	—	ADFLTR2IP2	ADFLTR2IP1	ADFLTR2IP0	—	ADFLTR1IP2	ADFLTR1IP1	ADFLTR1IP0	—	ADFLTR0IP2	ADFLTR0IP1	ADFLTR0IP0
IPC31	87Eh	—	SPI2GIP0	SPI2GIP1	SPI2GIP0	—	SPI1GIP2	SPI1GIP1	SPI1GIP0	—	CLC2PIP2	CLC2PIP1	CLC2PIP0	—	CLC1PIP2	CLC1PIP1	CLC1PIP0
IPC32	880h	—	MSIBIP2	MSIBIP1	MSIBIP0	—	MSIAIP2	MSIAIP1	MSIAIP0	—	MSIS1IP2	MSIS1IP1	MSIS1IP0	—	—	—	—
IPC33	882h	—	MSIFIP2	MSIFIP1	MSIFIP0	—	MSIEIP2	MSIEIP1	MSIEIP0	—	MSIDIP2	MSIDIP1	MSIDIP0	—	MSICIP2	MSICIP1	MSICIP0
IPC34	884h	—	MSIWFEIP2	MSIWFEIP1	MSIWFEIP0	—	MSIDTIP2	MSIDTIP1	MSIDTIP0	—	MSIHIP2	MSIHIP1	MSIHIP0	—	MSIGIP2	MSIGIP1	MSIGIP0

Legend: — = Unimplemented.

© 2017-2018 Microchip Technology Inc.

TABLE 3-26: MASTER INTERRUPT PRIORITY REGISTERS (CONTINUED)

Register	Address	Bit 15	Bit14	Bit 13	Bit 12	Bit 11	Bit 10	Bit 9	Bit 8	Bit 7	Bit 6	Bit 5	Bit 4	Bit 3	Bit 2	Bit 1	Bit 0
IPC35	886h	—	—	—	—	—	—	—	—	—	S1SRSTIP2	S1SRSTIP1	S1SRSTIP0	—	MSIFLTIP2	MSIFLTIP1	MSIFLTIP0
IPC36	888h	—	—	—	—	—	S1BRKIP2	S1BRKIP1	S1BRKIP0	—	—	—	—	—	—	—	—
IPC37	88Ah	—	—	—	—	—	CCT7IP2	CCT7IP1	CCT7IP0	—	CCP7IP2	CCP7IP1	CCP7IP0	—	—	—	—
IPC38	88Ch	—	—	—	—	—	—	—	—	—	CCT8IP2	CCT8IP1	CCT8IP0	—	CCP8IP2	CCP8IP1	CCP8IP0
IPC39	88Eh	—	—	—	—	—	—	—	—	—	S1CLKFIP2	S1CLKFIP1	S1CLKFIP0	—	—	—	—
IPC40	890h	—	—	—	—	—	—	—	—	—	—	—	—	—	—	—	—
IPC41	892h	—	—	—	—	—	—	—	—	—	—	—	—	—	—	—	—
IPC42	894h	—	PEVTCIP2	PEVTCIP1	PEVTCIP0	—	PEVTBIP2	PEVTBIP1	PEVTBIP0	—	PEVTAIP2	PEVTAIP1	PEVTAIP0	—	ADFIFOIP2	ADFIFOIP1	ADFIFOIP0
IPC43	896h	—	CLC3PIP2	CLC3PIP1	CLC3PIP0	—	PEVTFIP2	PEVTFIP1	PEVTFIP0	—	PEVTEIP2	PEVTEIP1	PEVTEIP0	—	PEVTDIP2	PEVTDIP1	PEVTDIP0
IPC44	898h	—	CLC3NIP2	CLC3NIP1	CLC3NIP0	—	CLC2NIP2	CLC2NIP1	CLC2NIP0	—	CLC1NIP2	CLC1NIP1	CLC1NIP0	—	CLC4PIP2	CLC4PIP1	CLC4PIP0
IPC45	89Ah	—	—	—	—	—	—	—	—	—	—	—	—	—	CLC4NIP2	CLC4NIP1	CLC4NIP0
IPC46	89Ch	—	—	—	—	—	—	—	—	—	—	—	—	—	—	—	—
IPC47	89Eh	—	—	—	—	—	U2EVTIP2	U2EVTIP1	U2EVTIP0	—	U1EVTIP2	U1EVTIP1	U1EVTIP0	—	—	—	—

Legend: — = Unimplemented.

© 2017-2018 Microchip Technology Inc.

3.5.3 INTERRUPT RESOURCES

Many useful resources are provided on the main product page of the Microchip web site for the devices listed in this data sheet. This product page contains the latest updates and additional information.

3.5.3.1 Key Resources

- **"Interrupts"** (DS70000600) in the *"dsPIC33/PIC24 Family Reference Manual"*
- Code Samples
- Application Notes
- Software Libraries
- Webinars
- All Related *"dsPIC33/PIC24 Family Reference Manual"* Sections
- Development Tools

3.5.4 INTERRUPT CONTROL AND STATUS REGISTERS

The dsPIC33CH128MP508 family devices implement the following registers for the interrupt controller:

- INTCON1
- INTCON2
- INTCON3
- INTCON4
- INTTREG

3.5.4.1 INTCON1 through INTCON4

Global interrupt control functions are controlled from INTCON1, INTCON2, INTCON3 and INTCON4.

INTCON1 contains the Interrupt Nesting Disable bit (NSTDIS), as well as the control and status flags for the processor trap sources.

The INTCON2 register controls external interrupt request signal behavior, contains the Global Interrupt Enable bit (GIE) and the Alternate Interrupt Vector Table Enable bit (AIVTEN).

INTCON3 contains the status flags for the Auxiliary PLL and DO stack overflow status trap sources.

The INTCON4 register contains the Software Generated Hard Trap Status bit (SGHT).

3.5.4.2 IFSx

The IFSx registers maintain all of the interrupt request flags. Each source of interrupt has a status bit, which is set by the respective peripherals or external signal and is cleared via software.

3.5.4.3 IECx

The IECx registers maintain all of the interrupt enable bits. These control bits are used to individually enable interrupts from the peripherals or external signals.

3.5.4.4 IPCx

The IPCx registers are used to set the Interrupt Priority Level (IPL) for each source of interrupt. Each user interrupt source can be assigned to one of seven priority levels.

3.5.4.5 INTTREG

The INTTREG register contains the associated interrupt vector number and the new CPU Interrupt Priority Level, which are latched into the Vector Number (VECNUM<7:0>) and Interrupt Level bits (ILR<3:0>) fields in the INTTREG register. The new Interrupt Priority Level is the priority of the pending interrupt.

The interrupt sources are assigned to the IFSx, IECx and IPCx registers in the same sequence as they are listed in Table 3-23. For example, INT0 (External Interrupt 0) is shown as having Vector Number 8 and a natural order priority of 0. Thus, the INT0IF bit is found in IFS0<0>, the INT0IE bit in IEC0<0> and the INT0IP<2:0> bits in the first position of IPC0 (IPC0<2:0>).

3.5.4.6 Status/Control Registers

Although these registers are not specifically part of the interrupt control hardware, two of the CPU Control registers contain bits that control interrupt functionality. For more information on these registers, refer to **"dsPIC33E Enhanced CPU"** (DS70005158) in the *"dsPIC33/PIC24 Family Reference Manual"*.

- The CPU STATUS Register, SR, contains the IPL<2:0> bits (SR<7:5>). These bits indicate the current CPU Interrupt Priority Level. The user software can change the current CPU Interrupt Priority Level by writing to the IPLx bits.
- The CORCON register contains the IPL3 bit, which together with IPL<2:0>, also indicates the current CPU priority level. IPL3 is a read-only bit so that trap events cannot be masked by the user software.

All Interrupt registers are described in Register 3-18 through Register 3-22 in the following pages.

3.5.5 INTERRUPT STATUS/CONTROL REGISTERS

REGISTER 3-16: SR: CPU STATUS REGISTER(1)

R/W-0	R/W-0	R/W-0	R/W-0	R/C-0	R/C-0	R-0	R/W-0
OA	OB	SA	SB	OAB	SAB	DA	DC
bit 15							bit 8

R/W-0(3)	R/W-0(3)	R/W-0(3)	R-0	R/W-0	R/W-0	R/W-0	R/W-0
IPL2(2)	IPL1(2)	IPL0(2)	RA	N	OV	Z	C
bit 7							bit 0

Legend:	C = Clearable bit		
R = Readable bit	W = Writable bit	U = Unimplemented bit, read as ‘0’	
-n = Value at POR	‘1’= Bit is set	‘0’ = Bit is cleared	x = Bit is unknown

bit 7-5 **IPL<2:0>:** CPU Interrupt Priority Level Status bits(2,3)
`111` = CPU Interrupt Priority Level is 7 (15); user interrupts are disabled
`110` = CPU Interrupt Priority Level is 6 (14)
`101` = CPU Interrupt Priority Level is 5 (13)
`100` = CPU Interrupt Priority Level is 4 (12)
`011` = CPU Interrupt Priority Level is 3 (11)
`010` = CPU Interrupt Priority Level is 2 (10)
`001` = CPU Interrupt Priority Level is 1 (9)
`000` = CPU Interrupt Priority Level is 0 (8)

Note 1: For complete register details, see Register 3-1.
2: The IPL<2:0> bits are concatenated with the IPL<3> bit (CORCON<3>) to form the CPU Interrupt Priority Level. The value in parentheses indicates the IPL, if IPL<3> = `1`. User interrupts are disabled when IPL<3> = `1`.
3: The IPL<2:0> Status bits are read-only when the NSTDIS bit (INTCON1<15>) = `1`.

© 2017-2018 Microchip Technology Inc.

REGISTER 3-17: CORCON: CORE CONTROL REGISTER(1)

R/W-0	U-0	R/W-0	R/W-0	R/W-0	R-0	R-0	R-0
VAR	—	US1	US0	EDT	DL2	DL1	DL0
bit 15							bit 8

R/W-0	R/W-0	R/W-1	R/W-0	R/C-0	R-0	R/W-0	R/W-0
SATA	SATB	SATDW	ACCSAT	IPL3(2)	SFA	RND	IF
bit 7							bit 0

Legend:	C = Clearable bit		
R = Readable bit	W = Writable bit	U = Unimplemented bit, read as ‘0’	
-n = Value at POR	‘1’= Bit is set	‘0’ = Bit is cleared	x = Bit is unknown

bit 15 **VAR:** Variable Exception Processing Latency Control bit
`1` = Variable exception processing is enabled
`0` = Fixed exception processing is enabled

bit 3 **IPL3:** CPU Interrupt Priority Level Status bit 3(2)
`1` = CPU Interrupt Priority Level is greater than 7
`0` = CPU Interrupt Priority Level is 7 or less

Note 1: For complete register details, see Register 3-2.
2: The IPL3 bit is concatenated with the IPL<2:0> bits (SR<7:5>) to form the CPU Interrupt Priority Level.

REGISTER 3-18: INTCON1: INTERRUPT CONTROL REGISTER 1

R/W-0	R/W-0	R/W-0	R/W-0	R/W-0	R/W-0	R/W-0	R/W-0
NSTDIS	OVAERR	OVBERR	COVAERR	COVBERR	OVATE	OVBTE	COVTE
bit 15							bit 8

R/W-0	R/W-0	R/W-0	R/W-0	R/W-0	R/W-0	R/W-0	U-0
SFTACERR	DIV0ERR	DMACERR	MATHERR	ADDRERR	STKERR	OSCFAIL	—
bit 7							bit 0

Legend:			
R = Readable bit	W = Writable bit	U = Unimplemented bit, read as ‘0’	
-n = Value at POR	‘1’ = Bit is set	‘0’ = Bit is cleared	x = Bit is unknown

bit 15 **NSTDIS:** Interrupt Nesting Disable bit
1 = Interrupt nesting is disabled
0 = Interrupt nesting is enabled

bit 14 **OVAERR:** Accumulator A Overflow Trap Flag bit
1 = Trap was caused by an overflow of Accumulator A
0 = Trap was not caused by an overflow of Accumulator A

bit 13 **OVBERR:** Accumulator B Overflow Trap Flag bit
1 = Trap was caused by an overflow of Accumulator B
0 = Trap was not caused by an overflow of Accumulator B

bit 12 **COVAERR:** Accumulator A Catastrophic Overflow Trap Flag bit
1 = Trap was caused by a catastrophic overflow of Accumulator A
0 = Trap was not caused by a catastrophic overflow of Accumulator A

bit 11 **COVBERR:** Accumulator B Catastrophic Overflow Trap Flag bit
1 = Trap was caused by a catastrophic overflow of Accumulator B
0 = Trap was not caused by a catastrophic overflow of Accumulator B

bit 10 **OVATE:** Accumulator A Overflow Trap Enable bit
1 = Trap overflow of Accumulator A
0 = Trap is disabled

bit 9 **OVBTE:** Accumulator B Overflow Trap Enable bit
1 = Trap overflow of Accumulator B
0 = Trap is disabled

bit 8 **COVTE:** Catastrophic Overflow Trap Enable bit
1 = Trap catastrophic overflow of Accumulator A or B is enabled
0 = Trap is disabled

bit 7 **SFTACERR:** Shift Accumulator Error Status bit
1 = Math error trap was caused by an invalid accumulator shift
0 = Math error trap was not caused by an invalid accumulator shift

© 2017-2018 Microchip Technology Inc.

REGISTER 3-18: INTCON1: INTERRUPT CONTROL REGISTER 1 (CONTINUED)

bit 6 **DIV0ERR:** Divide-by-Zero Error Status bit
1 = Math error trap was caused by a divide-by-zero
0 = Math error trap was not caused by a divide-by-zero

bit 5 **DMACERR:** DMA Controller Trap Status bit
1 = DMAC error trap has occurred
0 = DMAC error trap has not occurred

bit 4 **MATHERR:** Math Error Status bit
1 = Math error trap has occurred
0 = Math error trap has not occurred

bit 3 **ADDRERR:** Address Error Trap Status bit
1 = Address error trap has occurred
0 = Address error trap has not occurred

bit 2 **STKERR:** Stack Error Trap Status bit
1 = Stack error trap has occurred
0 = Stack error trap has not occurred

bit 1 **OSCFAIL:** Oscillator Failure Trap Status bit
1 = Oscillator failure trap has occurred
0 = Oscillator failure trap has not occurred

bit 0 **Unimplemented:** Read as ‘0’

REGISTER 3-19: INTCON2: INTERRUPT CONTROL REGISTER 2

R/W-1	R/W-0	R/W-0	U-0	U-0	U-0	U-0	R/W-0
GIE	DISI	SWTRAP	—	—	—	—	AIVTEN
bit 15							bit 8

U-0	U-0	U-0	U-0	R/W-0	R/W-0	R/W-0	R/W-0
—	—	—	—	INT3EP	INT2EP	INT1EP	INT0EP
bit 7							bit 0

Legend:			
R = Readable bit	W = Writable bit	U = Unimplemented bit, read as ‘0’	
-n = Value at POR	‘1’ = Bit is set	‘0’ = Bit is cleared	x = Bit is unknown

bit 15 **GIE:** Global Interrupt Enable bit
`1` = Interrupts and associated IE bits are enabled
`0` = Interrupts are disabled, but traps are still enabled

bit 14 **DISI:** `DISI` Instruction Status bit
`1` = `DISI` instruction is active
`0` = `DISI` instruction is not active

bit 13 **SWTRAP:** Software Trap Status bit
`1` = Software trap is enabled
`0` = Software trap is disabled

bit 12-9 **Unimplemented:** Read as ‘`0`’

bit 8 **AIVTEN:** Alternate Interrupt Vector Table Enable bit
`1` = Uses Alternate Interrupt Vector Table
`0` = Uses standard Interrupt Vector Table

bit 7-4 **Unimplemented:** Read as ‘`0`’

bit 3 **INT3EP:** External Interrupt 3 Edge Detect Polarity Select bit
`1` = Interrupt on negative edge
`0` = Interrupt on positive edge

bit 2 **INT2EP:** External Interrupt 2 Edge Detect Polarity Select bit
`1` = Interrupt on negative edge
`0` = Interrupt on positive edge

bit 1 **INT1EP:** External Interrupt 1 Edge Detect Polarity Select bit
`1` = Interrupt on negative edge
`0` = Interrupt on positive edge

bit 0 **INT0EP:** External Interrupt 0 Edge Detect Polarity Select bit
`1` = Interrupt on negative edge
`0` = Interrupt on positive edge

© 2017-2018 Microchip Technology Inc.

REGISTER 3-20: INTCON3: INTERRUPT CONTROL REGISTER 3

U-0	U-0	U-0	U-0	U-0	U-0	R/W-0	R/W-0
—	—	—	—	—	—	CAN	NAE
bit 15							bit 8

U-0	U-0	U-0	R/W-0	U-0	U-0	U-0	R/W-0
—	—	—	DOOVR	—	—	—	APLL
bit 7							bit 0

Legend:			
R = Readable bit	W = Writable bit	U = Unimplemented bit, read as ‘0’	
-n = Value at POR	‘1’ = Bit is set	‘0’ = Bit is cleared	x = Bit is unknown

bit 15-10 **Unimplemented:** Read as ‘0’

bit 9 **CAN:** CAN Address Error Soft Trap Status bit
1 = CAN address error soft trap has occurred
0 = CAN address error soft trap has not occurred

bit 8 **NAE:** NVM Address Error Soft Trap Status bit
1 = NVM address error soft trap has occurred
0 = NVM address error soft trap has not occurred

bit 7-5 **Unimplemented:** Read as ‘0’

bit 4 **DOOVR:** DO Stack Overflow Soft Trap Status bit
1 = DO stack overflow soft trap has occurred
0 = DO stack overflow soft trap has not occurred

bit 3-1 **Unimplemented:** Read as ‘0’

bit 0 **APLL:** Auxiliary PLL Loss of Lock Soft Trap Status bit
1 = APLL lock soft trap has occurred
0 = APLL lock soft trap has not occurred

REGISTER 3-21: INTCON4: INTERRUPT CONTROL REGISTER 4

U-0	U-0	U-0	U-0	U-0	U-0	U-0	U-0
—	—	—	—	—	—	—	—
bit 15							bit 8

U-0	U-0	U-0	U-0	U-0	U-0	R/W-0	R/W-0
—	—	—	—	—	—	ECCDBE	SGHT
bit 7							bit 0

Legend:			
R = Readable bit	W = Writable bit	U = Unimplemented bit, read as ‘0’	
-n = Value at POR	‘1’ = Bit is set	‘0’ = Bit is cleared	x = Bit is unknown

bit 15-2 **Unimplemented:** Read as ‘0’

bit 1 **ECCDBE:** ECC Double-Bit Error Trap bit
1 = ECC double-bit error trap has occurred
0 = ECC double-bit error trap has not occurred

bit 0 **SGHT:** Software Generated Hard Trap Status bit
1 = Software generated hard trap has occurred
0 = Software generated hard trap has not occurred

© 2017-2018 Microchip Technology Inc.

REGISTER 3-22: INTTREG: INTERRUPT CONTROL AND STATUS REGISTER

U-0	U-0	R-0	U-0	R-0	R-0	R-0	R-0
—	—	VHOLD	—	ILR3	ILR2	ILR1	ILR0
bit 15							bit 8

R-0	R-0	R-0	R-0	R-0	R-0	R-0	R-0
VECNUM7	VECNUM6	VECNUM5	VECNUM4	VECNUM3	VECNUM2	VECNUM1	VECNUM0
bit 7							bit 0

Legend:			
R = Readable bit	W = Writable bit	U = Unimplemented bit, read as ‘0’	
-n = Value at POR	‘1’ = Bit is set	‘0’ = Bit is cleared	x = Bit is unknown

bit 15-14 **Unimplemented:** Read as ‘0’

bit 13 **VHOLD:** Vector Number Capture Enable bit
1 = VECNUM<7:0> bits read current value of vector number encoding tree (i.e., highest priority pending interrupt)
0 = Vector number latched into VECNUM<7:0> at Interrupt Acknowledge and retained until next IACK

bit 12 **Unimplemented:** Read as ‘0’

bit 11-8 **ILR<3:0>:** New CPU Interrupt Priority Level bits
1111 = CPU Interrupt Priority Level is 15
...
0001 = CPU Interrupt Priority Level is 1
0000 = CPU Interrupt Priority Level is 0

bit 7-0 **VECNUM<7:0>:** Vector Number of Pending Interrupt bits
11111111 = 255, Reserved; do not use
...
00001001 = 9, IC1 – Input Capture 1
00001000 = 8, INT0 – External Interrupt 0
00000111 = 7, Reserved; do not use
00000110 = 6, Generic soft error trap
00000101 = 5, Reserved; do not use
00000100 = 4, Math error trap
00000011 = 3, Stack error trap
00000010 = 2, Generic hard trap
00000001 = 1, Address error trap
00000000 = 0, Oscillator fail trap

3.6 Master I/O Ports

Note 1: This data sheet summarizes the features of the dsPIC33CH128MP508 family of devices. It is not intended to be a comprehensive reference source. To complement the information in this data sheet, refer to **"I/O Ports with Edge Detect"** (DS70005322) in the *"dsPIC33/PIC24 Family Reference Manual"*, which is available from the Microchip web site (www.microchip.com).

2: The I/O ports are shared by Master core and Slave core. All input goes to both the Master and Slave. The I/O ownership is defined by the Configuration bits.

3: The TMS pin function may be active multiple times during ICSP™ device erase, programming and debugging. When the TMS function is active, the integrated pull-up resistor will pull the pin to VDD. Proper care should be taken if there are sensitive circuits connected on the TMS pin during programming/erase and debugging.

Many of the device pins are shared among the peripherals and the Parallel I/O ports. All I/O input ports feature Schmitt Trigger inputs for improved noise immunity. The Master and Slave have the same number of I/O ports and are shared. The Master PORT registers are located in the Master SFR and the Slave PORT registers are located in the Slave SFR, respectively.

Some of the key features of the I/O ports are:

- Individual Output Pin Open-Drain Enable/Disable
- Individual Input Pin Weak Pull-up and Pull-Down
- Monitor Selective Inputs and Generate Interrupt when Change in Pin State is Detected
- Operation during Sleep and Idle modes

Note: The output functionality of the ports is defined by the Configuration registers, FCFGPRA0 to FCFGPRE0. When these Configuration bits are maintained as '1', the Master owns the pin (only the output function); when the bits are '0', the ownership of that specific pin belongs to the Slave.

The input function of the I/O is valid for both Master and Slave. The Configuration registers, FCFGPRA0 to FCFGPRE0, do not have any control over the input function.

3.6.1 PARALLEL I/O (PIO) PORTS

All port pins have 12 registers directly associated with their operation as digital I/Os. The Data Direction register (TRISx) determines whether the pin is an input or an output. If the data direction bit is a '1', then the pin is an input.

All port pins are defined as inputs after a Reset. Reads from the latch (LATx), read the latch. Writes to the latch, write the latch. Reads from the port (PORTx), read the port pins, while writes to the port pins, write the latch. Any bit and its associated data and control registers that are not valid for a particular device are disabled. This means the corresponding LATx and TRISx registers, and the port pin are read as zeros.

When a pin is shared with another peripheral or function that is defined as an input only, it is nevertheless regarded as a dedicated port because there is no other competing source of outputs. Table 3-27 shows the pin availability. Table 3-28 shows the 5V input tolerant pins across this device.

© 2017-2018 Microchip Technology Inc.

TABLE 3-27: PIN AND ANSELx AVAILABILITY

Device	Rx15	Rx14	Rx13	Rx12	Rx11	Rx10	Rx9	Rx8	Rx7	Rx6	Rx5	Rx4	Rx3	Rx2	Rx1	Rx0
PORTA																
dsPIC33XXXMP508/208	—	—	—	—	—	—	—	—	—	—	—	X	X	X	X	X
dsPIC33XXXMP506/206	—	—	—	—	—	—	—	—	—	—	—	X	X	X	X	X
dsPIC33XXXMP505/205	—	—	—	—	—	—	—	—	—	—	—	X	X	X	X	X
dsPIC33XXXMP503/203	—	—	—	—	—	—	—	—	—	—	—	X	X	X	X	X
dsPIC33XXXMP502/202	—	—	—	—	—	—	—	—	—	—	—	X	X	X	X	X
ANSELA	—	—	—	—	—	—	—	—	—	—	—	X	X	X	X	X
PORTB																
dsPIC33XXXMP508/208	X	X	X	X	X	X	X	X	X	X	X	X	X	X	X	X
dsPIC33XXXMP506/206	X	X	X	X	X	X	X	X	X	X	X	X	X	X	X	X
dsPIC33XXXMP505/205	X	X	X	X	X	X	X	X	X	X	X	X	X	X	X	X
dsPIC33XXXMP503/203	X	X	X	X	X	X	X	X	X	X	X	X	X	X	X	X
dsPIC33XXXMP502/202	X	X	X	X	X	X	X	X	X	X	X	X	X	X	X	X
ANSELB	—	—	—	—	—	X	X	X	—	—	—	X	X	X	X	X
PORTC																
dsPIC33XXXMP508/208	X	X	X	X	X	X	X	X	X	X	X	X	X	X	X	X
dsPIC33XXXMP506/206	X	X	X	X	X	X	X	X	X	X	X	X	X	X	X	X
dsPIC33XXXMP505/205	—	—	X	X	X	X	X	X	X	X	X	X	X	X	X	X
dsPIC33XXXMP503/203	—	—	—	—	—	—	—	—	—	—	X	X	X	X	X	X
dsPIC33XXXMP502/202	—	—	—	—	—	—	—	—	—	—	—	—	—	—	—	—
ANSELC	—	—	—	—	—	—	—	—	X	—	—	—	X	X	X	X
PORTD																
dsPIC33XXXMP508/208	X	X	X	X	X	X	X	X	X	X	X	X	X	X	X	X
dsPIC33XXXMP506/206	X	X	X	X	X	X	X	X	X	X	X	X	X	X	X	X
dsPIC33XXXMP505/205	—	—	X	—	—	X	—	X	—	—	—	—	—	—	X	—
dsPIC33XXXMP503/203	—	—	—	—	—	—	—	—	—	—	—	—	—	—	—	—
dsPIC33XXXMP502/202	—	—	—	—	—	—	—	—	—	—	—	—	—	—	—	—
ANSELD	—	—	—	—	—	X	—	—	—	—	—	—	—	—	—	—
PORTE																
dsPIC33XXXMP508/208	X	X	X	X	X	X	X	X	X	X	X	X	X	X	X	X
dsPIC33XXXMP506/206	—	—	—	—	—	—	—	—	—	—	—	—	—	—	—	—
dsPIC33XXXMP505/205	—	—	—	—	—	—	—	—	—	—	—	—	—	—	—	—
dsPIC33XXXMP503/203	—	—	—	—	—	—	—	—	—	—	—	—	—	—	—	—
dsPIC33XXXMP502/202	—	—	—	—	—	—	—	—	—	—	—	—	—	—	—	—

TABLE 3-28: 5V INPUT TOLERANT PORTS

PORTA	—	—	—	—	—	—	—	—	—	—	—	RA4	RA3	RA2	RA1	RA0
PORTB	RB15	RB14	RB13	RB12	RB11	RB10	RB9	RB8	RB7	RB6	RB5	RB4	RB3	RB2	RB1	RB0
PORTC	RC15	RC14	RC13	RC12	RC11	RC10	RC9	RC8	RC7	RC6	RC5	RC4	RC3	RC2	RC1	RC0
PORTD	RD15	RD14	RD13	RD12	RD11	RD10	RD9	RD8	RD7	RD6	RD5	RD4	RD3	RD2	RD1	RD0
PORTE	RE15	RE14	RE13	RE12	RE11	RE10	RE9	RE8	RE7	RE6	RE5	RE4	RE3	RE2	RE1	RE0

Legend: **Shaded pins** are up to 5.5 VDC input tolerant.

FIGURE 3-19: BLOCK DIAGRAM OF A TYPICAL SHARED PORT STRUCTURE

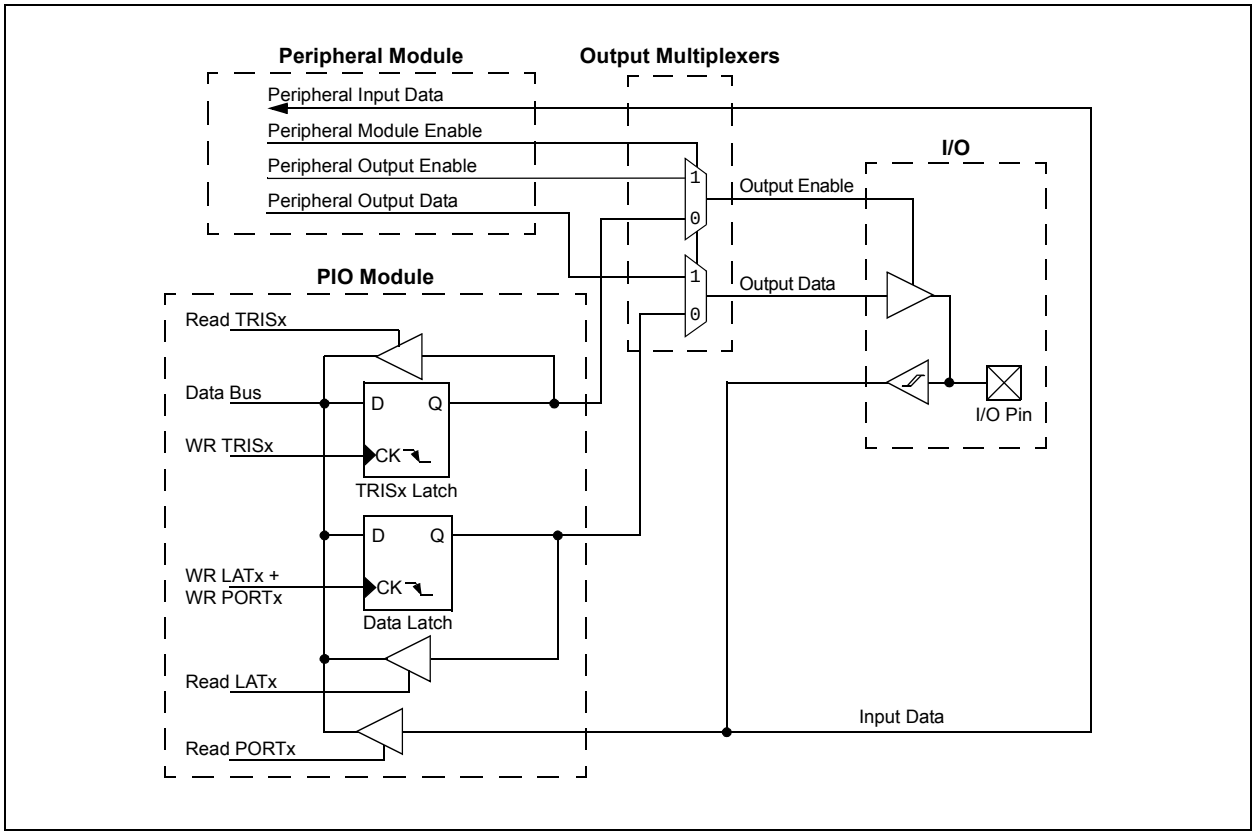

© 2017-2018 Microchip Technology Inc.

3.6.1.1 Open-Drain Configuration

In addition to the PORTx, LATx and TRISx registers for data control, port pins can also be individually configured for either digital or open-drain output. This is controlled by the Open-Drain Enable for PORTx register, ODCx, associated with each port. Setting any of the bits configures the corresponding pin to act as an open-drain output.

The open-drain feature allows the generation of outputs, other than VDD, by using external pull-up resistors. The maximum open-drain voltage allowed on any pin is the same as the maximum VIH specification for that particular pin.

3.6.2 CONFIGURING ANALOG AND DIGITAL PORT PINS

The ANSELx registers control the operation of the analog port pins. The port pins that are to function as analog inputs or outputs must have their corresponding ANSELx and TRISx bits set. In order to use port pins for I/O functionality with digital modules, such as timers, UARTs, etc., the corresponding ANSELx bit must be cleared.

The ANSELx registers have a default value of 0xFFFF; therefore, all pins that share analog functions are analog (not digital) by default.

Pins with analog functions affected by the ANSELx registers are listed with a buffer type of analog in the Pinout I/O Descriptions (see Table 1-1).

If the TRISx bit is cleared (output) while the ANSELx bit is set, the digital output level (VOH or VOL) is converted by an analog peripheral, such as the ADC module or comparator module.

When the PORTx register is read, all pins configured as analog input channels are read as cleared (a low level).

Pins configured as digital inputs do not convert an analog input. Analog levels on any pin, defined as a digital input (including the ANx pins), can cause the input buffer to consume current that exceeds the device specifications.

3.6.2.1 I/O Port Write/Read Timing

One instruction cycle is required between a port direction change or port write operation and a read operation of the same port. Typically, this instruction would be a NOP.

The following registers are in the PORT module:

- Register 3-23: ANSELx (one per port)
- Register 3-24: TRISx (one per port)
- Register 3-25: PORTx (one per port)
- Register 3-26: LATx (one per port)
- Register 3-27: ODCx (one per port)
- Register 3-28: CNPUx (one per port)
- Register 3-29: CNPDx (one per port)
- Register 3-30: CNCONx (one per port – optional)
- Register 3-31: CNEN0x (one per port)
- Register 3-32: CNSTATx (one per port – optional)
- Register 3-33: CNEN1x (one per port)
- Register 3-34: CNFx (one per port)

3.6.3 MASTER PORT CONTROL REGISTERS

REGISTER 3-23: ANSELx: ANALOG SELECT FOR PORTx REGISTER

R/W-1	R/W-1	R/W-1	R/W-1	R/W-1	R/W-1	R/W-1	R/W-1
ANSELx<15:8>							
bit 15							bit 8

R/W-1	R/W-1	R/W-1	R/W-1	R/W-1	R/W-1	R/W-1	R/W-1
ANSELx<7:0>							
bit 7							bit 0

Legend:			
R = Readable bit	W = Writable bit	U = Unimplemented bit, read as ‘0’	
-n = Value at POR	‘1’ = Bit is set	‘0’ = Bit is cleared	x = Bit is unknown

bit 15-0 **ANSELx<15:0>:** Analog Select for PORTx bits
`1` = Analog input is enabled and digital input is disabled on the PORTx[n] pin
`0` = Analog input is disabled and digital input is enabled on the PORTx[n] pin

© 2017-2018 Microchip Technology Inc.

REGISTER 3-24: TRISx: OUTPUT ENABLE FOR PORTx REGISTER

R/W-1	R/W-1	R/W-1	R/W-1	R/W-1	R/W-1	R/W-1	R/W-1
TRISx<15:8>							
bit 15							bit 8

R/W-1	R/W-1	R/W-1	R/W-1	R/W-1	R/W-1	R/W-1	R/W-1
TRISx<7:0>							
bit 7							bit 0

Legend:			
R = Readable bit	W = Writable bit	U = Unimplemented bit, read as ‘0’	
-n = Value at POR	‘1’ = Bit is set	‘0’ = Bit is cleared	x = Bit is unknown

bit 15-0 **TRISx<15:0>:** Output Enable for PORTx bits
`1` = LATx[n] is not driven on the PORTx[n] pin
`0` = LATx[n] is driven on the PORTx[n] pin

REGISTER 3-25: PORTx: INPUT DATA FOR PORTx REGISTER

R/W-1	R/W-1	R/W-1	R/W-1	R/W-1	R/W-1	R/W-1	R/W-1
PORTx<15:8>							
bit 15							bit 8

R/W-1	R/W-1	R/W-1	R/W-1	R/W-1	R/W-1	R/W-1	R/W-1
PORTx<7:0>							
bit 7							bit 0

Legend:			
R = Readable bit	W = Writable bit	U = Unimplemented bit, read as ‘0’	
-n = Value at POR	‘1’ = Bit is set	‘0’ = Bit is cleared	x = Bit is unknown

bit 15-0 **PORTx<15:0>:** PORTx Data Input Value bits

REGISTER 3-26: LATx: OUTPUT DATA FOR PORTx REGISTER

R/W-x	R/W-x	R/W-x	R/W-x	R/W-x	R/W-x	R/W-x	R/W-x
LATx<15:8>							
bit 15							bit 8

R/W-x	R/W-x	R/W-x	R/W-x	R/W-x	R/W-x	R/W-x	R/W-x
LATx<7:0>							
bit 7							bit 0

Legend:			
R = Readable bit	W = Writable bit	U = Unimplemented bit, read as ‘0’	
-n = Value at POR	‘1’ = Bit is set	‘0’ = Bit is cleared	x = Bit is unknown

bit 15-0 **LATx<15:0>:** PORTx Data Output Value bits

REGISTER 3-27: ODCx: OPEN-DRAIN ENABLE FOR PORTx REGISTER

R/W-0	R/W-0	R/W-0	R/W-0	R/W-0	R/W-0	R/W-0	R/W-0
ODCx<15:8>							
bit 15							bit 8

R/W-0	R/W-0	R/W-0	R/W-0	R/W-0	R/W-0	R/W-0	R/W-0
ODCx<7:0>							
bit 7							bit 0

Legend:			
R = Readable bit	W = Writable bit	U = Unimplemented bit, read as ‘0’	
-n = Value at POR	‘1’ = Bit is set	‘0’ = Bit is cleared	x = Bit is unknown

bit 15-0 **ODCx<15:0>:** PORTx Open-Drain Enable bits
`1` = Open-drain is enabled on the PORTx pin
`0` = Open-drain is disabled on the PORTx pin

© 2017-2018 Microchip Technology Inc.

REGISTER 3-28: CNPUx: CHANGE NOTIFICATION PULL-UP ENABLE FOR PORTx REGISTER

R/W-0	R/W-0	R/W-0	R/W-0	R/W-0	R/W-0	R/W-0	R/W-0
CNPUx<15:8>							
bit 15							bit 8

R/W-0	R/W-0	R/W-0	R/W-0	R/W-0	R/W-0	R/W-0	R/W-0
CNPUx<7:0>							
bit 7							bit 0

Legend:			
R = Readable bit	W = Writable bit	U = Unimplemented bit, read as ‘0’	
-n = Value at POR	‘1’ = Bit is set	‘0’ = Bit is cleared	x = Bit is unknown

bit 15-0 **CNPUx<15:0>:** Change Notification Pull-up Enable for PORTx bits
`1` = The pull-up for PORTx[n] is enabled – takes precedence over the pull-down selection
`0` = The pull-up for PORTx[n] is disabled

REGISTER 3-29: CNPDx: CHANGE NOTIFICATION PULL-DOWN ENABLE FOR PORTx REGISTER

R/W-0	R/W-0	R/W-0	R/W-0	R/W-0	R/W-0	R/W-0	R/W-0
CNPDx<15:8>							
bit 15							bit 8

R/W-0	R/W-0	R/W-0	R/W-0	R/W-0	R/W-0	R/W-0	R/W-0
CNPDx<7:0>							
bit 7							bit 0

Legend:			
R = Readable bit	W = Writable bit	U = Unimplemented bit, read as ‘0’	
-n = Value at POR	‘1’ = Bit is set	‘0’ = Bit is cleared	x = Bit is unknown

bit 15-0 **CNPDx<15:0>:** Change Notification Pull-Down Enable for PORTx bits
`1` = The pull-down for PORTx[n] is enabled (if the pull-up for PORTx[n] is not enabled)
`0` = The pull-down for PORTx[n] is disabled

REGISTER 3-30: CNCONx: CHANGE NOTIFICATION CONTROL FOR PORTx REGISTER

R/W-0	U-0	U-0	U-0	R/W-0	U-0	U-0	U-0
ON	—	—	—	CNSTYLE	—	—	—
bit 15							bit 8

U-0	U-0	U-0	U-0	U-0	U-0	U-0	U-0
—	—	—	—	—	—	—	—
bit 7							bit 0

Legend:			
R = Readable bit	W = Writable bit	U = Unimplemented bit, read as ‘0’	
-n = Value at POR	‘1’ = Bit is set	‘0’ = Bit is cleared	x = Bit is unknown

bit 15 **ON:** Change Notification (CN) Control for PORTx On bit
`1` = CN is enabled
`0` = CN is disabled

bit 14-12 **Unimplemented:** Read as ‘`0`’

bit 11 **CNSTYLE:** Change Notification Style Selection bit
`1` = Edge style (detects edge transitions, CNFx<15:0> bits are used for a Change Notification event)
`0` = Mismatch style (detects change from last port read, CNSTATx<15:0> bits are used for a Change Notification event)

bit 10-0 **Unimplemented:** Read as ‘`0`’

REGISTER 3-31: CNEN0x: INTERRUPT CHANGE NOTIFICATION ENABLE FOR PORTx REGISTER

R/W-0	R/W-0	R/W-0	R/W-0	R/W-0	R/W-0	R/W-0	R/W-0
CNEN0x<15:8>							
bit 15							bit 8

R/W-0	R/W-0	R/W-0	R/W-0	R/W-0	R/W-0	R/W-0	R/W-0
CNEN0x<7:0>							
bit 7							bit 0

Legend:			
R = Readable bit	W = Writable bit	U = Unimplemented bit, read as ‘0’	
-n = Value at POR	‘1’ = Bit is set	‘0’ = Bit is cleared	x = Bit is unknown

bit 15-0 **CNEN0x<15:0>:** Interrupt Change Notification Enable for PORTx bits
`1` = Interrupt-on-change (from the last read value) is enabled for PORTx[n]
`0` = Interrupt-on-change is disabled for PORTx[n]

© 2017-2018 Microchip Technology Inc.

REGISTER 3-32: CNSTATx: INTERRUPT CHANGE NOTIFICATION STATUS FOR PORTx REGISTER

R-0	R-0	R-0	R-0	R-0	R-0	R-0	R-0
CNSTATx<15:8>							
bit 15							bit 8

R-0	R-0	R-0	R-0	R-0	R-0	R-0	R-0
CNSTATx<7:0>							
bit 7							bit 0

Legend:			
R = Readable bit	W = Writable bit	U = Unimplemented bit, read as ‘0’	
-n = Value at POR	‘1’ = Bit is set	‘0’ = Bit is cleared	x = Bit is unknown

bit 15-0 **CNSTATx<15:0>:** Interrupt Change Notification Status for PORTx bits
When CNSTYLE (CNCONx<11>) = `0`:
`1` = Change occurred on PORTx[n] since last read of PORTx[n]
`0` = Change did not occur on PORTx[n] since last read of PORTx[n]

REGISTER 3-33: CNEN1x: INTERRUPT CHANGE NOTIFICATION EDGE SELECT FOR PORTx REGISTER

R/W-0	R/W-0	R/W-0	R/W-0	R/W-0	R/W-0	R/W-0	R/W-0
CNEN1x<15:8>							
bit 15							bit 8

R/W-0	R/W-0	R/W-0	R/W-0	R/W-0	R/W-0	R/W-0	R/W-0
CNEN1x<7:0>							
bit 7							bit 0

Legend:			
R = Readable bit	W = Writable bit	U = Unimplemented bit, read as ‘0’	
-n = Value at POR	‘1’ = Bit is set	‘0’ = Bit is cleared	x = Bit is unknown

bit 15-0 **CNEN1x<15:0>:** Interrupt Change Notification Edge Select for PORTx bits

REGISTER 3-34: CNFx: INTERRUPT CHANGE NOTIFICATION FLAG FOR PORTx REGISTER

R/W-0	R/W-0	R/W-0	R/W-0	R/W-0	R/W-0	R/W-0	R/W-0
CNFx<15:8>							
bit 15							bit 8

R/W-0	R/W-0	R/W-0	R/W-0	R/W-0	R/W-0	R/W-0	R/W-0
CNFx<7:0>							
bit 7							bit 0

Legend:			
R = Readable bit	W = Writable bit	U = Unimplemented bit, read as ‘0’	
-n = Value at POR	‘1’ = Bit is set	‘0’ = Bit is cleared	x = Bit is unknown

bit 15- **CNFx<15:0>:** Interrupt Change Notification Flag for PORTx bits
When CNSTYLE (CNCONx<11>) = 1:
1 = An enabled edge event occurred on the PORTx[n] pin
0 = An enabled edge event did not occur on the PORTx[n] pin

© 2017-2018 Microchip Technology Inc.

3.6.4 INPUT CHANGE NOTIFICATION (ICN)

The Input Change Notification function of the I/O ports allows the dsPIC33CH128MP508 family devices to generate interrupt requests to the processor in response to a Change-of-State (COS) on selected input pins. This feature can detect input Change-of-States, even in Sleep mode, when the clocks are disabled. Every I/O port pin can be selected (enabled) for generating an interrupt request on a Change-of-State. Five control registers are associated with the Change Notification (CN) functionality of each I/O port. To enable the Change Notification feature for the port, the ON bit (CNCONx<15>) must be set.

The CNEN0x and CNEN1x registers contain the CN interrupt enable control bits for each of the input pins. The setting of these bits enables a CN interrupt for the corresponding pins. Also, these bits, in combination with the CNSTYLE bit (CNCONx<11>), define a type of transition when the interrupt is generated. Possible CN event options are listed in Table 3-29.

TABLE 3-29: CHANGE NOTIFICATION EVENT OPTIONS

CNSTYLE Bit (CNCONx<11>)	CNEN1x Bit	CNEN0x Bit	Change Notification Event Description
0	Does not matter	0	Disabled
0	Does not matter	1	Detects a mismatch between the last read state and the current state of the pin
1	0	0	Disabled
1	0	1	Detects a positive transition only (from ‘0’ to ‘1’)
1	1	0	Detects a negative transition only (from ‘1’ to ‘0’)
1	1	1	Detects both positive and negative transitions

The CNSTATx register indicates whether a change occurred on the corresponding pin since the last read of the PORTx bit. In addition to the CNSTATx register, the CNFx register is implemented for each port. This register contains flags for Change Notification events. These flags are set if the valid transition edge, selected in the CNEN0x and CNEN1x registers, is detected. CNFx stores the occurrence of the event. CNFx bits must be cleared in software to get the next Change Notification interrupt. The CN interrupt is generated only for the I/Os configured as inputs (corresponding TRISx bits must be set).

Note: Pull-ups and pull-downs on Input Change Notification pins should always be disabled when the port pin is configured as a digital output.

3.6.5 PERIPHERAL PIN SELECT (PPS)

A major challenge in general purpose devices is providing the largest possible set of peripheral features, while minimizing the conflict of features on I/O pins. The challenge is even greater on low pin count devices. In an application where more than one peripheral needs to be assigned to a single pin, inconvenient work arounds in application code, or a complete redesign, may be the only option.

Peripheral Pin Select configuration provides an alternative to these choices by enabling peripheral set selection and placement on a wide range of I/O pins. By increasing the pinout options available on a particular device, users can better tailor the device to their entire application, rather than trimming the application to fit the device.

The Peripheral Pin Select configuration feature operates over a fixed subset of digital I/O pins. Users may independently map the input and/or output of most digital peripherals to any one of these I/O pins. Hardware safeguards are included that prevent accidental or spurious changes to the peripheral mapping once it has been established.

3.6.6 AVAILABLE PINS

The number of available pins is dependent on the particular device and its pin count. Pins that support the Peripheral Pin Select feature include the label, “RPn”, in their full pin designation, where “n” is the remappable pin number. “RP” is used to designate pins that support both remappable input and output functions.

3.6.7 AVAILABLE PERIPHERALS

The peripherals managed by the Peripheral Pin Select are all digital only peripherals. These include general serial communications (UART and SPI), general purpose timer clock inputs, timer-related peripherals (input capture and output compare) and interrupt-on-change inputs.

In comparison, some digital only peripheral modules are never included in the Peripheral Pin Select feature. This is because the peripheral’s function requires special I/O circuitry on a specific port and cannot be easily connected to multiple pins. One example includes I^2C modules. A similar requirement excludes all modules with analog inputs, such as the A/D Converter (ADC)

A key difference between remappable and non-remappable peripherals is that remappable peripherals are not associated with a default I/O pin. The peripheral must always be assigned to a specific I/O pin before it can be used. In contrast, non-remappable peripherals are always available on a default pin, assuming that the peripheral is active and not conflicting with another peripheral.

When a remappable peripheral is active on a given I/O pin, it takes priority over all other digital I/Os and digital communication peripherals associated with the pin. Priority is given regardless of the type of peripheral that is mapped. Remappable peripherals never take priority over any analog functions associated with the pin.

3.6.8 CONTROLLING CONFIGURATION CHANGES

Because peripheral mapping can be changed during run time, some restrictions on peripheral remapping are needed to prevent accidental configuration changes. The dsPIC33CH128MP508 devices have implemented the control register lock sequence.

3.6.8.1 CONTROL REGISTER LOCK

Under normal operation, writes to the RPINRx and RPORx registers are not allowed. Attempted writes will appear to execute normally, but the contents of the registers will remain unchanged. To change these registers, they must be unlocked in hardware. The register lock is controlled by the IOLOCK bit (RPCON<11>). Setting IOLOCK prevents writes to the control registers; clearing IOLOCK allows writes.

To set or clear IOLOCK, the NVMKEY unlock sequence must be executed:

1. Write 0x55 to NVMKEY.
2. Write 0xAA to NVMKEY.
3. Clear (or set) IOLOCK as a single operation.

IOLOCK remains in one state until changed. This allows all of the Peripheral Pin Selects to be configured with a single unlock sequence, followed by an update to all of the control registers. Then, IOLOCK can be set with a second lock sequence.

Note:	MPLAB® C30 provides a built-in C language function for unlocking and modifying the RPCON register: `__builtin_write_RPCON(value);` For more information, see the MPLAB C30 Help files.

3.6.9 CONSIDERATIONS FOR PERIPHERAL PIN SELECTION

The ability to control Peripheral Pin Selection introduces several considerations into application design that most users would never think of otherwise. This is particularly true for several common peripherals, which are only available as remappable peripherals.

The main consideration is that the Peripheral Pin Selects are not available on default pins in the device's default (Reset) state. More specifically, because all RPINRx registers reset to '1's and RPORx registers reset to '0's, this means all PPS inputs are tied to VSS, while all PPS outputs are disconnected. This means that before any other application code is executed, the user must initialize the device with the proper peripheral configuration. Because the IOLOCK bit resets in the unlocked state, it is not necessary to execute the unlock sequence after the device has come out of Reset. For application safety, however, it is always better to set IOLOCK and lock the configuration after writing to the control registers.

The NVMKEY unlock sequence must be executed as an Assembly language routine. If the bulk of the application is written in C, or another high-level language, the unlock sequence should be performed by writing in-line assembly or by using the `__builtin_write_RPCON(value)` function provided by the compiler.

Choosing the configuration requires a review of all Peripheral Pin Selects and their pin assignments, particularly those that will not be used in the application. In all cases, unused pin-selectable peripherals should be disabled completely. Unused peripherals should have their inputs assigned to an unused RPn pin function. I/O pins with unused RPn functions should be configured with the null peripheral output.

3.6.10 INPUT MAPPING

The inputs of the Peripheral Pin Select options are mapped on the basis of the peripheral. That is, a control register associated with a peripheral dictates the pin it will be mapped to. The RPINRx registers are used to configure peripheral input mapping. Each register contains sets of 8-bit fields, with each set associated with one of the remappable peripherals. Programming a given peripheral's bit field with an appropriate 8-bit index value maps the RPn pin with the corresponding value, or internal signal, to that peripheral. See Table 3-30 for a list of available inputs.

For example, Figure 3-20 illustrates remappable pin selection for the U1RX input.

© 2017-2018 Microchip Technology Inc.

FIGURE 3-20: REMAPPABLE INPUT FOR U1RX

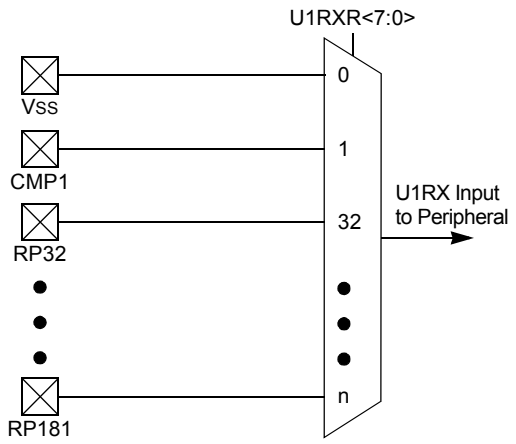

Note: For input only, Peripheral Pin Select functionality does not have priority over TRISx settings. Therefore, when configuring an RPn pin for input, the corresponding bit in the TRISx register must also be configured for input (set to '1'). Physical connection to a pin can be made through RP32 through RP71. There are internal signals and virtual pins that can be connected to an input. Table 3-30 shows the details of the input assignment.

Example 3-2 provides a configuration for bidirectional communication with flow control using UART1. The following input and output functions are used:

- Input Functions: U1RX, $\overline{\text{U1CTS}}$
- Output Functions: U1TX, $\overline{\text{U1RTS}}$

EXAMPLE 3-2: CONFIGURING UART1 INPUT AND OUTPUT FUNCTIONS

```
//
*****************************************
// Unlock Registers
//*****************************************
__builtin_write_RPCON(0x0000);
//*****************************************
// Configure Input Functions (See Table 3-31)
// Assign U1Rx To Pin RP35
//***************************
_U1RXR = 35;
// Assign U1CTS To Pin RP36
//***************************
_U1CTSR = 36;
//*****************************************
// Configure Output Functions (See Table 3-33)
//*****************************************
// Assign U1Tx To Pin RP37
//***************************
_RP37 = 1;
//***************************
// Assign U1RTS To Pin RP38
//***************************
_RP38 = 2;
//*****************************************
// Lock Registers
//*****************************************
__builtin_write_RPCON(0x0800);
```

TABLE 3-30: MASTER REMAPPABLE PIN INPUTS

RPINRx<15:8> or RPINRx<7:0 >	Function	Available on Ports
0	VSS	Internal
1	Master Comparator 1	Internal
2	Slave Comparator 1	Internal
3	Slave Comparator 2	Internal
4	Slave Comparator 3	Internal
5	Slave REFCLKO	Internal
6	Master PTG Trigger 26	Internal
7	Master PTG Trigger 27	Internal
8	Slave PWM Event Output C	Internal
9	Slave PWM Event Output D	Internal
10	Slave PWM Event Output E	Internal
11	Master PWM Event Output C	Internal
12	Master PWM Event Output D	Internal
13	Master PWM Event Output E	Internal
14-31	RP14-RP31	Reserved
32	RP32	Port Pin RB0
33	RP33	Port Pin RB1
34	RP34	Port Pin RB2
35	RP35	Port Pin RB3
36	RP36	Port Pin RB4
37	RP37	Port Pin RB5
38	RP38	Port Pin RB6
39	RP39	Port Pin RB7
40	RP40	Port Pin RB8
41	RP41	Port Pin RB9
42	RP42	Port Pin RB10
43	RP43	Port Pin RB11
44	RP44	Port Pin RB12
45	RP45	Port Pin RB13
46	RP46	Port Pin RB14
47	RP47	Port Pin RB15
48	RP48	Port Pin RC0
49	RP49	Port Pin RC1
50	RP50	Port Pin RC2
51	RP51	Port Pin RC3
52	RP52	Port Pin RC4
53	RP53	Port Pin RC5
54	RP54	Port Pin RC6
55	RP55	Port Pin RC7
56	RP56	Port Pin RC8
57	RP57	Port Pin RC9
58	RP58	Port Pin RC10
59	RP59	Port Pin RC11

© 2017-2018 Microchip Technology Inc.

TABLE 3-30: MASTER REMAPPABLE PIN INPUTS (CONTINUED)

RPINRx<15:8> or RPINRx<7:0 >	Function	Available on Ports
60	RP60	Port Pin RC12
61	RP61	Port Pin RC13
62	RP62	Port Pin RC14
63	RP63	Port Pin RC15
64	RP64	Port Pin RD0
65	RP65	Port Pin RD1
66	RP66	Port Pin RD2
67	RP67	Port Pin RD3
68	RP68	Port Pin RD4
69	RP69	Port Pin RD5
70	RP70	Port Pin RD6
71	RP71	Port Pin RD7
72-169	RP72-RP169	Reserved
170	RP170	Slave Virtual S1RPV0
171	RP171	Slave Virtual S1RPV1
172	RP172	Slave Virtual S1RPV2
173	RP173	Slave Virtual S1RPV3
174	RP174	Slave Virtual S1RPV4
175	RP175	Slave Virtual S1RPV5
176	RP176	Master Virtual RPV0
177	RP177	Master Virtual RPV1
178	RP178	Master Virtual RPV2
179	RP179	Master Virtual RPV3
180	RP180	Master Virtual RPV4
181	RP181	Master Virtual RPV5

© 2017-2018 Microchip Technology Inc.

3.6.11 VIRTUAL CONNECTIONS

The dsPIC33CH128MP508 devices support six Master virtual RPn pins (RP176-RP181), which are identical in functionality to all other RPn pins, with the exception of pinouts. These six pins are internal to the devices and are not connected to a physical device pin.

These pins provide a simple way for inter-peripheral connection without utilizing a physical pin. For example, the output of the analog comparator can be connected to RP176 and the PWM Fault input can be configured for RP176 as well. This configuration allows the analog comparator to trigger PWM Faults without the use of an actual physical pin on the device.

3.6.12 SLAVE PPS INPUTS TO MASTER CORE PPS

The dsPIC33CH128MP508 Slave core subsystem PPS has connections to the Master core subsystem virtual PPS (RPV5-RPV0) output blocks. These inputs are mapped as S1RP175, S1RP174, S1RP173, S1RP172, S1RP171 and S1RP170.

The RPn inputs, RP1-RP13, are connected to internal signals from both the Master and Slave core subsystems. Additionally, the Master core virtual output PPS blocks (RPV5-RPV0) are connected to the Slave core PPS circuitry.

There are virtual pins in PPS to share between Master and Slave:

- RP181 is for Master input (RPV5)
- RP180 is for Master input (RPV4)
- RP179 is for Master input (RPV3)
- RP178 is for Master input (RPV2)
- RP177 is for Master input (RPV1)
- RP176 is for Master input (RPV0)
- RP175 is for Slave input (S1RPV5)
- RP174 is for Slave input (S1RPV4)
- RP173 is for Slave input (S1RPV3)
- RP172 is for Slave input (S1RPV2)
- RP171 is for Slave input (S1RPV1)
- RP170 is for Slave input (S1RPV0)

The idea of the RPVn (Remappable Pin Virtual) is to interconnect between the Master and Slave without an I/O pin. For example, the Master UART receiver can be connected to the Slave UART transmit using RPVn and data communication can happen from Slave to Master without using any physical pin.

© 2017-2018 Microchip Technology Inc.

TABLE 3-31: SELECTABLE INPUT SOURCES (MAPS INPUT TO FUNCTION)

Input Name(1)	Function Name	Register	Register Bits
External Interrupt 1	INT1	RPINR0	INT1R<7:0>
External Interrupt 2	INT2	RPINR1	INT2R<7:0>
External Interrupt 3	INT3	RPINR1	INT3R<7:0>
Timer1 External Clock	T1CK	RPINR2	T1CK<7:0>
SCCP Timer1	TCKI1	RPINR3	TCKI1R<7:0>
SCCP Capture 1	ICM1	RPINR3	ICM1R<7:0>
SCCP Timer2	TCKI2	RPINR4	TCKI2R<7:0>
SCCP Capture 2	ICM2	RPINR4	ICM2R<7:0>
SCCP Timer3	TCKI3	RPINR5	TCKI3R<7:0>
SCCP Capture 3	ICM3	RPINR5	ICM3R<7:0>
SCCP Timer4	TCKI4	RPINR6	TCKI4R<7:0>
SCCP Capture 4	ICM4	RPINR6	ICM4R<7:0>
SCCP Timer5	TCKI5	RPINR7	TCKI5R<7:0>
SCCP Capture 5	ICM5	RPINR7	ICM5R<7:0>
SCCP Timer6	TCKI6	RPINR8	TCKI6R<7:0>
SCCP Capture 6	ICM6	RPINR8	ICM6R<7:0>
SCCP Timer7	TCKI7	RPINR9	TCKI7R<7:0>
SCCP Capture 7	ICM7	RPINR9	ICM7R<7:0>
SCCP Timer8	TCKI8	RPINR10	TCKI8R<7:0>
SCCP Capture 8	ICM8	RPINR10	ICM8R<7:0>
SCCP Fault A	OCFA	RPINR11	OCFAR<7:0>
SCCP Fault B	OCFB	RPINR11	OCFBR<7:0>
PWM Input 8	PCI8	RPINR12	PCI8R<7:0>
PWM Input 9	PCI9	RPINR12	PCI9R<7:0>
PWM Input 10	PCI10	RPINR13	PCI10R<7:0>
PWM Input 11	PCI11	RPINR13	PCI11R<7:0>
QEI Input A	QEIA1	RPINR14	QEIA1R<7:0>
QEI Input B	QEIB1	RPINR14	QEIB1R<7:0>
QEI Index 1 Input	QEINDX1	RPINR15	QEINDX1R<7:0>
QEI Home 1 Input	QEIHOM1	RPINR15	QEIHOM1R<7:0>
UART1 Receive	U1RX	RPINR18	U1RXR<7:0>
UART1 Data-Set-Ready	$\overline{\text{U1DSR}}$	RPINR18	U1DSRR<7:0>
UART2 Receive	U2RX	RPINR19	U2RXR<7:0>
UART2 Data-Set-Ready	$\overline{\text{U2DSR}}$	RPINR19	U2DSRR<7:0>
SPI1 Data Input	SDI1	RPINR20	SDI1R<7:0>
SPI1 Clock Input	SCK1IN	RPINR20	SCK1R<7:0>
SPI1 Slave Select	$\overline{\text{SS1}}$	RPINR21	SS1R<7:0>
Reference Clock Input	REFOI	RPINR21	REFOIR<7:0>
SPI2 Data Input	SDI2	RPINR22	SDI2R<7:0>
SPI2 Clock Input	SCK2IN	RPINR22	SCK2R<7:0>
SPI2 Slave Select	$\overline{\text{SS2}}$	RPINR23	SS2R<7:0>
UART1 Clear-to-Send	$\overline{\text{U1CTS}}$	RPINR23	U1CTSR<7:0>

Note 1: Unless otherwise noted, all inputs use the Schmitt Trigger input buffers.

TABLE 3-31: SELECTABLE INPUT SOURCES (MAPS INPUT TO FUNCTION) (CONTINUED)

Input Name[1]	Function Name	Register	Register Bits
CAN1 Input	CAN1RX	RPINR26	CAN1RXR<7:0>
UART2 Clear-to-Send	$\overline{\text{U2CTS}}$	RPINR30	U2CTSR<7:0>
PWM Input 17	PCI17	RPINR37	PCI17R<7:0>
PWM Input 18	PCI18	RPINR38	PCI18R<7:0>
PWM Input 12	PCI12	RPINR42	PCI12R<7:0>
PWM Input 13	PCI13	RPINR42	PCI13R<7:0>
PWM Input 14	PCI14	RPINR43	PCI14R<7:0>
PWM Input 15	PCI15	RPINR43	PCI15R<7:0>
PWM Input 16	PCI16	RPINR44	PCI16R<7:0>
SENT1 Input	SENT1	RPINR44	SENT1R<7:0>
SENT2 Input	SENT2	RPINR45	SENT2R<7:0>
CLC Input A	CLCINA	RPINR45	CLCINAR<7:0>
CLC Input B	CLCINB	RPINR46	CLCINBR<7:0>
CLC Input C	CLCINC	RPINR46	CLCINCR<7:0>
CLC Input D	CLCIND	RPINR47	CLCINDR<7:0>
ADC Trigger Input (ADTRIG31)	ADCTRG	RPINR47	ADCTRGR<7:0>

Note 1: Unless otherwise noted, all inputs use the Schmitt Trigger input buffers.

© 2017-2018 Microchip Technology Inc.

3.6.13 OUTPUT MAPPING

In contrast to inputs, the outputs of the Peripheral Pin Select options are mapped on the basis of the pin. In this case, a control register associated with a particular pin dictates the peripheral output to be mapped. The RPORx registers are used to control output mapping. Each register contains sets of 6-bit fields, with each set associated with one RPn pin (see Register 3-68 through Register 3-90). The value of the bit field corresponds to one of the peripherals and that peripheral's output is mapped to the pin (see Table 3-33 and Figure 3-21).

A null output is associated with the output register Reset value of '0'. This is done to ensure that remappable outputs remain disconnected from all output pins by default.

FIGURE 3-21: MULTIPLEXING REMAPPABLE OUTPUTS FOR RPn

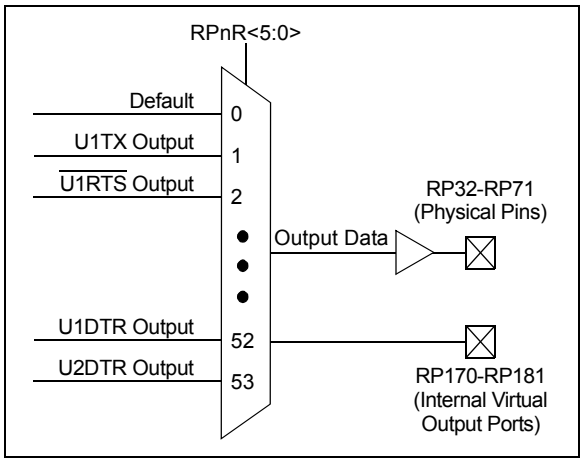

Note 1: There are six virtual output ports which are not connected to any I/O ports (RP176-RP181). These virtual ports can be accessed by RPOR20, RPOR21 and RPOR22.

3.6.14 MAPPING LIMITATIONS

The control schema of the peripheral select pins is not limited to a small range of fixed peripheral configurations. There are no mutual or hardware-enforced lockouts between any of the peripheral mapping SFRs. Literally, any combination of peripheral mappings, across any or all of the RPn pins, is possible. This includes both many-to-one and one-to-many mappings of peripheral inputs, and outputs to pins. While such mappings may be technically possible from a configuration point of view, they may not be supportable from an electrical point of view (see Table 3-32).

TABLE 3-32: MASTER REMAPPABLE OUTPUT PIN REGISTERS

Register	RP Pin	I/O Port
RPOR0<5:0>	RP32	Port Pin RB0
RPOR0<13:8>	RP33	Port Pin RB1
RPOR1<5:0>	RP34	Port Pin RB2
RPOR1<13:8>	RP35	Port Pin RB3
RPOR2<5:0>	RP36	Port Pin RB4
RPOR2<13:8>	RP37	Port Pin RB5
RPOR3<5:0>	RP38	Port Pin RB6
RPOR3<13:8>	RP39	Port Pin RB7
RPOR4<5:0>	RP40	Port Pin RB8
RPOR4<13:8>	RP41	Port Pin RB9
RPOR5<5:0>	RP42	Port Pin RB10
RPOR5<13:8>	RP43	Port Pin RB11
RPOR6<5:0>	RP44	Port Pin RB12
RPOR6<13:8>	RP45	Port Pin RB13
RPOR7<5:0>	RP46	Port Pin RB14
RPOR7<13:8>	RP47	Port Pin RB15
RPOR8<5:0>	RP48	Port Pin RC0
RPOR8<13:8>	RP49	Port Pin RC1
RPOR9<5:0>	RP50	Port Pin RC2
RPOR9<13:8>	RP51	Port Pin RC3
RPOR10<5:0>	RP52	Port Pin RC4
RPOR10<13:8>	RP53	Port Pin RC5
RPOR11<5:0>	RP54	Port Pin RC6
RPOR11<13:8>	RP55	Port Pin RC7
RPOR12<5:0>	RP56	Port Pin RC8
RPOR12<13:8>	RP57	Port Pin RC9
RPOR13<5:0>	RP58	Port Pin RC10
RPOR13<13:8>	RP59	Port Pin RC11
RPOR14<5:0>	RP60	Port Pin RC12
RPOR14<13:8>	RP61	Port Pin RC13
RPOR15<5:0>	RP62	Port Pin RC14
RPOR15<13:8>	RP63	Port Pin RC15
RPOR16<5:0>	RP64	Port Pin RD0
RPOR16<13:8>	RP65	Port Pin RD1
RPOR17<5:0>	RP66	Port Pin RD2
RPOR17<13:8>	RP67	Port Pin RD3
RPOR18<5:0>	RP68	Port Pin RD4
RPOR18<13:8>	RP69	Port Pin RD5
RPOR19<5:0>	RP70	Port Pin RD6
RPOR19<13:8>	RP71	Port Pin RD7
	RP175-RP169	Reserved
RPOR20<5:0>	RP176	Virtual Pin RPV0
RPOR20<13:8>	RP177	Virtual Pin RPV1
RPOR21<5:0>	RP178	Virtual Pin RPV2
RPOR21<13:8>	RP179	Virtual Pin RPV3
RPOR22<5:0>	RP180	Virtual Pin RPV4
RPOR22<13:8>	RP181	Virtual Pin RPV5

© 2017-2018 Microchip Technology Inc.

TABLE 3-33: OUTPUT SELECTION FOR REMAPPABLE PINS (RPn)

Function	RPnR<5:0>	Output Name
Default PORT	000000	RPn tied to Default Pin
U1TX	000001	RPn tied to UART1 Transmit
$\overline{\text{U1RTS}}$	000010	RPn tied to UART1 Request-to-Send
U2TX	000011	RPn tied to UART2 Transmit
$\overline{\text{U2RTS}}$	000100	RPn tied to UART2 Request-to-Send
SDO1	000101	RPn tied to SPI1 Data Output
SCK1	000110	RPn tied to SPI1 Clock Output
$\overline{\text{SS1}}$	000111	RPn tied to SPI1 Slave Select
SDO2	001000	RPn tied to SPI2 Data Output
SCK2	001001	RPn tied to SPI2 Clock Output
$\overline{\text{SS2}}$	001010	RPn tied to SPI2 Slave Select
REFCLKO	001110	RPn tied to Reference Clock Output
OCM1	001111	RPn tied to SCCP1 Output
OCM2	010000	RPn tied to SCCP2 Output
OCM3	010001	RPn tied to SCCP3 Output
OCM4	010010	RPn tied to SCCP4 Output
OCM5	010011	RPn tied to SCCP5 Output
OCM6	010100	RPn tied to SCCP6 Output
CAN1	010101	RPn tied to CAN1 Output
CMP1	010111	RPn tied to Comparator 1 Output
PWM4H	100010	RPn tied to PWM4H Output
PWM4L	100011	RPn tied to PWM4L Output
PWMEA	100100	RPn tied to PWM Event A Output
PWMEB	100101	RPn tied to PWM Event B Output
QEICMP	100110	RPn tied to QEI Comparator Output
CLC1OUT	101000	RPn tied to CLC1 Output
CLC2OUT	101001	RPn tied to CLC2 Output
OCM7	101010	RPn tied to SCCP7 Output
OCM8	101011	RPn tied to SCCP8 Output
PWMEC	101100	RPn tied to PWM Event C Output
PWMED	101101	RPn tied to PWM Event D Output
PTGTRG24	101110	PTG Trigger Output 24
PTGTRG25	101111	PTG Trigger Output 25
SENT1OUT	110000	RPn tied to SENT1 Output
SENT2OUT	110001	RPn tied to SENT2 Output
CLC3OUT	110010	RPn tied to CLC3 Output
CLC4OUT	110011	RPn tied to CLC4 Output
U1DTR	110100	Data Terminal Ready Output 1
U2DTR	110101	Data Terminal Ready Output 2

3.6.15 I/O HELPFUL TIPS

1. In some cases, certain pins, as defined in Table 24-18 under “Injection Current”, have internal protection diodes to VDD and VSS. The term, “Injection Current”, is also referred to as “Clamp Current”. On designated pins, with sufficient external current-limiting precautions by the user, I/O pin input voltages are allowed to be greater or lesser than the data sheet absolute maximum ratings, with respect to the VSS and VDD supplies. Note that when the user application forward biases either of the high or low-side internal input clamp diodes, that the resulting current being injected into the device that is clamped internally by the VDD and VSS power rails, may affect the ADC accuracy by four to six counts.
2. I/O pins that are shared with any analog input pin (i.e., ANx) are always analog pins, by default, after any Reset. Consequently, configuring a pin as an analog input pin automatically disables the digital input pin buffer and any attempt to read the digital input level by reading PORTx or LATx will always return a ‘0’, regardless of the digital logic level on the pin. To use a pin as a digital I/O pin on a shared ANx pin, the user application needs to configure the Analog Select for PORTx registers in the I/O ports module (i.e., ANSELx) by setting the appropriate bit that corresponds to that I/O port pin to a ‘0’.

Note:	Although it is not possible to use a digital input pin when its analog function is enabled, it is possible to use the digital I/O output function, TRISx = 0x0, while the analog function is also enabled. However, this is not recommended, particularly if the analog input is connected to an external analog voltage source, which would create signal contention between the analog signal and the output pin driver.

3. Most I/O pins have multiple functions. Referring to the device pin diagrams in this data sheet, the priorities of the functions allocated to any pins are indicated by reading the pin name, from left-to-right. The left most function name takes precedence over any function to its right in the naming convention. For example: AN14/ISRC1/RP50/RC2; this indicates that AN14 is the highest priority in this example and will supersede all other functions to its right in the list. Those other functions to its right, even if enabled, would not work as long as any other function to its left was enabled. This rule applies to all of the functions listed for a given pin.
4. Each pin has an internal weak pull-up resistor and pull-down resistor that can be configured using the CNPUx and CNPDx registers, respectively. These resistors eliminate the need for external resistors in certain applications. The internal pull-up is up to ~(VDD – 0.8), not VDD. This value is still above the minimum VIH of CMOS and TTL devices.
5. When driving LEDs directly, the I/O pin can source or sink more current than what is specified in the VOH/IOH and VOL/IOL DC characteristics specification. The respective IOH and IOL current rating only applies to maintaining the corresponding output at or above the VOH, and at or below the VOL levels. However, for LEDs, unlike digital inputs of an externally connected device, they are not governed by the same minimum VIH/VIL levels. An I/O pin output can safely sink or source any current less than that listed in the Absolute Maximum Ratings in **Section 24.0 “Electrical Characteristics”** of this data sheet. For example:

   VOH = 2.4v @ IOH = -8 mA and VDD = 3.3V

   The maximum output current sourced by any 8 mA I/O pin = 12 mA.

   LED source current < 12 mA is technically permitted. Refer to the VOH/IOH graphs in **Section 25.0 “DC and AC Device Characteristics Graphs”** for additional information.

© 2017-2018 Microchip Technology Inc.

6. The Peripheral Pin Select (PPS) pin mapping rules are as follows:
   a) Only one “output” function can be active on a given pin at any time, regardless if it is a dedicated or remappable function (one pin, one output).
   b) It is possible to assign a “remappable output” function to multiple pins and externally short or tie them together for increased current drive.
   c) If any “dedicated output” function is enabled on a pin, it will take precedence over any remappable “output” function.
   d) If any “dedicated digital” (input or output) function is enabled on a pin, any number of “input” remappable functions can be mapped to the same pin.
   e) If any “dedicated analog” function(s) are enabled on a given pin, “digital input(s)” of any kind will all be disabled, although a single “digital output”, at the user’s cautionary discretion, can be enabled and active as long as there is no signal contention with an external analog input signal. For example, it is possible for the ADC to convert the digital output logic level, or to toggle a digital output on a comparator or ADC input, provided there is no external analog input, such as for a built-in self-test.
   f) Any number of “input” remappable functions can be mapped to the same pin(s) at the same time, including to any pin with a single output from either a dedicated or remappable “output”.
   g) The TRISx registers control *only* the digital I/O output buffer. Any other dedicated or remappable active “output” will automatically override the TRISx setting. The TRISx register *does not* control the digital logic “input” buffer. Remappable digital “inputs” do not automatically override TRISx settings, which means that the TRISx bit must be set to input for pins with only remappable input function(s) assigned.
   h) All analog pins are enabled by default after any Reset and the corresponding digital input buffer on the pin has been disabled. Only the Analog Select for PORTx (ANSELx) registers control the digital input buffer, *not* the TRISx register. The user must disable the analog function on a pin using the Analog Select for PORTx registers in order to use any “digital input(s)” on a corresponding pin, no exceptions.

3.6.16 I/O PORTS RESOURCES

Many useful resources are provided on the main product page of the Microchip web site for the devices listed in this data sheet. This product page contains the latest updates and additional information.

3.6.16.1 Key Resources

- **“I/O Ports with Edge Detect”** (DS70005322) in the *“dsPIC33/PIC24 Family Reference Manual”*
- Code Samples
- Application Notes
- Software Libraries
- Webinars
- All Related *“dsPIC33/PIC24 Family Reference Manual”* Sections
- Development Tools

TABLE 3-34: PORTA REGISTER SUMMARY

ANSELA	—	—	—	—	—	—	—	—	—	—	—	ANSELA<4:0>				
TRISA	—	—	—	—	—	—	—	—	—	—	—	TRISA<4:0>				
PORTA	—	—	—	—	—	—	—	—	—	—	—	RA<4:0>				
LATA	—	—	—	—	—	—	—	—	—	—	—	LATA<4:0>				
ODCA	—	—	—	—	—	—	—	—	—	—	—	ODCA<4:0>				
CNPUA	—	—	—	—	—	—	—	—	—	—	—	CNPUA<4:0>				
CNPDA	—	—	—	—	—	—	—	—	—	—	—	CNPDA<4:0>				
CNCONA	ON	—	—	—	CNSTYLE	—	—	—	—	—	—	—	—	—	—	—
CNEN0A	—	—	—	—	—	—	—	—	—	—	—	CNEN0A<4:0>				
CNSTATA	—	—	—	—	—	—	—	—	—	—	—	CNSTATA<4:0>				
CNEN1A	—	—	—	—	—	—	—	—	—	—	—	CNEN1A<4:0>				
CNFA	—	—	—	—	—	—	—	—	—	—	—	CNFA<4:0>				

TABLE 3-35: PORTB REGISTER SUMMARY

ANSELB	—	—	—	—	—	—	ANSELB<9:7>			—	—	—	ANSELB<3:0>			
TRISB	TRISB<15:0>															
PORTB	RB<15:0>															
LATB	LATB<15:0>															
ODCB	ODCB<15:0>															
CNPUB	CNPUB<15:0>															
CNPDB	CNPDB<15:0>															
CNCONB	ON	—	—	—	CNSTYLE	—	—	—	—	—	—	—	—	—	—	—
CNEN0B	CNEN0<15:0>															
CNSTATB	CNSTATB<15:0>															
CNEN1B	CNEN1B<15:0>															
CNFB	CNFB<15:0>															

© 2017-2018 Microchip Technology Inc.

TABLE 3-36: PORTC REGISTER SUMMARY

ANSELC	—	—	—	—	—	—	—	ANSELC<8:7>		—	—	—	ANSELC<3:0>			
TRISC	TRISC<15:0>															
PORTC	RC<15:0>															
LATC	LATC<15:0>															
ODCC	ODCC<15:0>															
CNPUC	CNPUC<15:0>															
CNPDC	CNPDC<15:0>															
CNCONC	ON	—	—	—	CNSTYLE	—	—	—	—	—	—	—	—	—	—	—
CNEN0C	CNEN0C<15:0>															
CNSTATC	CNSTATC<15:0>															
CNEN1C	CNEN1C<15:0>															
CNFC	CNFC<15:0>															

TABLE 3-37: PORTD REGISTER SUMMARY

ANSELD	—	—	—	—	—	ANSEL10	—	—	—	—	—	—	—	—	—	—
TRISD	TRISD<15:0>															
PORTD	RD<15:0>															
LATD	LATD<15:0>															
ODCD	ODCD<15:0>															
CNPUD	CNPUD<15:0>															
CNPDD	CNPDD<15:0>															
CNCOND	ON	—	—	—	CNSTYLE	—	—	—	—	—	—	—	—	—	—	—
CNEN0D	CNEN0D<15:0>															
CNSTATD	CNSTATD<15:0>															
CNEN1D	CNEN1D<15:0>															
CNFD	CNFD<15:0>															

© 2017-2018 Microchip Technology Inc.

TABLE 3-38: PORTE REGISTER SUMMARY

ANSLE	—	—	—	—	—	—	—	—	—	—	—	—	—	—	—	—
TRISE	TRISE<15:0>															
PORTE	RE<15:0>															
LATE	LATE<15:0>															
ODCE	ODCE<15:0>															
CNPUE	CNPUE<15:0>															
CNPDE	CNPDE<15:0>															
CNCONE	ON	—	—	—	CNSTYLE	—	—	—	—	—	—	—	—	—	—	—
CNEN0E	CNEN0E<15:0>															
CNSTATE	CNSTATE<15:0>															
CNEN1E	CNEN1E<15:0>															
CNFE	CNFE<15:0>															

© 2017-2018 Microchip Technology Inc.

3.6.17 PERIPHERAL PIN SELECT REGISTERS

REGISTER 3-35: RPCON: PERIPHERAL REMAPPING CONFIGURATION REGISTER(1)

U-0	U-0	U-0	U-0	R/W-0	U-0	U-0	U-0
—	—	—	—	IOLOCK	—	—	—
bit 15							bit 8

U-0	U-0	U-0	U-0	U-0	U-0	U-0	U-0
—	—	—	—	—	—	—	—
bit 7							bit 0

Legend:			
R = Readable bit	W = Writable bit	U = Unimplemented bit, read as ‘0’	
-n = Value at POR	‘1’ = Bit is set	‘0’ = Bit is cleared	x = Bit is unknown

bit 15-12 **Unimplemented:** Read as ‘0’

bit 11 **IOLOCK:** Peripheral Remapping Register Lock bit
1 = All Peripheral Remapping registers are locked and cannot be written
0 = All Peripheral Remapping registers are unlocked and can be written

bit 10-0 **Unimplemented:** Read as ‘0’

Note 1: Writing to this register needs an unlock sequence.

REGISTER 3-36: RPINR0: PERIPHERAL PIN SELECT INPUT REGISTER

R/W-0	R/W-0	R/W-0	R/W-0	R/W-0	R/W-0	R/W-0	R/W-0
INT1R7	INT1R6	INT1R5	INT1R4	INT1R3	INT1R2	INT1R1	INT1R0
bit 15							bit 8

U-0	U-0	U-0	U-0	U-0	U-0	U-0	U-0
—	—	—	—	—	—	—	—
bit 7							bit 0

Legend:			
R = Readable bit	W = Writable bit	U = Unimplemented bit, read as ‘0’	
-n = Value at POR	‘1’ = Bit is set	‘0’ = Bit is cleared	x = Bit is unknown

bit 15-8 **INT1R<7:0>:** Assign External Interrupt 1 (INT1) to the Corresponding RPn Pin bits
See Table 3-30.

bit 7-0 **Unimplemented:** Read as ‘0’

REGISTER 3-37: RPINR1: PERIPHERAL PIN SELECT INPUT REGISTER 1

R/W-0	R/W-0	R/W-0	R/W-0	R/W-0	R/W-0	R/W-0	R/W-0
INT3R7	INT3R6	INT3R5	INT3R4	INT3R3	INT3R2	INT3R1	INT3R0
bit 15							bit 8

R/W-0	R/W-0	R/W-0	R/W-0	R/W-0	R/W-0	R/W-0	R/W-0
INT2R7	INT2R6	INT2R5	INT2R4	INT2R3	INT2R2	INT2R1	INT2R0
bit 7							bit 0

Legend:			
R = Readable bit	W = Writable bit	U = Unimplemented bit, read as ‘0’	
-n = Value at POR	‘1’ = Bit is set	‘0’ = Bit is cleared	x = Bit is unknown

bit 15-8 **INT3R<7:0>:** Assign External Interrupt 3 (INT3) to the Corresponding RPn Pin bits
See Table 3-30.

bit 7-0 **INT2R<7:0>:** Assign External Interrupt 2 (INT2) to the Corresponding RPn Pin bits
See Table 3-30.

REGISTER 3-38: RPINR2: PERIPHERAL PIN SELECT INPUT REGISTER 2

R/W-0	R/W-0	R/W-0	R/W-0	R/W-0	R/W-0	R/W-0	R/W-0
T1CKR7	T1CKR6	T1CKR5	T1CKR4	T1CKR3	T1CKR2	T1CKR1	T1CKR0
bit 15							bit 8

U-0	U-0	U-0	U-0	U-0	U-0	U-0	U-0
—	—	—	—	—	—	—	—
bit 7							bit 0

Legend:			
R = Readable bit	W = Writable bit	U = Unimplemented bit, read as ‘0’	
-n = Value at POR	‘1’ = Bit is set	‘0’ = Bit is cleared	x = Bit is unknown

bit 15-8 **T1CKR<7:0>:** Assign Timer1 External Clock (T1CK) to the Corresponding RPn Pin bits
See Table 3-30.

bit 7-0 **Unimplemented:** Read as ‘0’

© 2017-2018 Microchip Technology Inc.

REGISTER 3-39: RPINR3: PERIPHERAL PIN SELECT INPUT REGISTER 3

R/W-0	R/W-0	R/W-0	R/W-0	R/W-0	R/W-0	R/W-0	R/W-0
ICM1R7	ICM1R6	ICM1R5	ICM1R4	ICM1R3	ICM1R2	ICM1R1	ICM1R0
bit 15							bit 8

R/W-0	R/W-0	R/W-0	R/W-0	R/W-0	R/W-0	R/W-0	R/W-0
TCKI1R7	TCKI1R6	TCKI1R5	TCKI1R4	TCKI1R3	TCKI1R2	TCKI1R1	TCKI1R0
bit 7							bit 0

Legend:			
R = Readable bit	W = Writable bit	U = Unimplemented bit, read as ‘0’	
-n = Value at POR	‘1’ = Bit is set	‘0’ = Bit is cleared	x = Bit is unknown

bit 15-8 **ICM1R<7:0>:** Assign SCCP Capture 1 (ICM1) Input to the Corresponding RPn Pin bits
See Table 3-30.

bit 7-0 **TCKI1<7:0>:** Assign SCCP Timer1 (TCKI1) Input to the Corresponding RPn Pin bits
See Table 3-30.

REGISTER 3-40: RPINR4: PERIPHERAL PIN SELECT INPUT REGISTER 4

R/W-0	R/W-0	R/W-0	R/W-0	R/W-0	R/W-0	R/W-0	R/W-0
ICM2R7	ICM2R6	ICM2R5	ICM2R4	ICM2R3	ICM2R2	ICM2R1	ICM2R0
bit 15							bit 8

R/W-0	R/W-0	R/W-0	R/W-0	R/W-0	R/W-0	R/W-0	R/W-0
TCKI2R7	TCKI2R6	TCKI2R5	TCKI2R4	TCKI2R3	TCKI2R2	TCKI2R1	TCKI2R0
bit 7							bit 0

Legend:			
R = Readable bit	W = Writable bit	U = Unimplemented bit, read as ‘0’	
-n = Value at POR	‘1’ = Bit is set	‘0’ = Bit is cleared	x = Bit is unknown

bit 15-8 **ICM2R<7:0>:** Assign SCCP Capture 2 (ICM2) Input to the Corresponding RPn Pin bits
See Table 3-30.

bit 7-0 **TCKI2R<7:0>:** Assign SCCP Timer2 (TCKI2) Input to the Corresponding RPn Pin bits
See Table 3-30.

REGISTER 3-41: RPINR5: PERIPHERAL PIN SELECT INPUT REGISTER 5

R/W-0	R/W-0	R/W-0	R/W-0	R/W-0	R/W-0	R/W-0	R/W-0
ICM3R7	ICM3R6	ICM3R5	ICM3R4	ICM3R3	ICM3R2	ICM3R1	ICM3R0
bit 15							bit 8

R/W-0	R/W-0	R/W-0	R/W-0	R/W-0	R/W-0	R/W-0	R/W-0
TCKI3R7	TCKI3R6	TCKI3R5	TCKI3R4	TCKI3R3	TCKI3R2	TCKI3R1	TCKI3R0
bit 7							bit 0

Legend:			
R = Readable bit	W = Writable bit	U = Unimplemented bit, read as ‘0’	
-n = Value at POR	‘1’ = Bit is set	‘0’ = Bit is cleared	x = Bit is unknown

bit 15-8 **ICM3R<7:0>:** Assign SCCP Capture 3 (ICM3) Input to the Corresponding RPn Pin bits
See Table 3-30.

bit 7-0 **TCKI3R<7:0>:** Assign SCCP Timer3 (TCKI3) Input to the Corresponding RPn Pin bits
See Table 3-30.

REGISTER 3-42: RPINR6: PERIPHERAL PIN SELECT INPUT REGISTER 6

R/W-0	R/W-0	R/W-0	R/W-0	R/W-0	R/W-0	R/W-0	R/W-0
ICM4R7	ICM4R6	ICM4R5	ICM4R4	ICM4R3	ICM4R2	ICM4R1	ICM4R0
bit 15							bit 8

R/W-0	R/W-0	R/W-0	R/W-0	R/W-0	R/W-0	R/W-0	R/W-0
TCKI4R7	TCKI4R6	TCKI4R5	TCKI4R4	TCKI4R3	TCKI4R2	TCKI4R1	TCKI4R0
bit 7							bit 0

Legend:			
R = Readable bit	W = Writable bit	U = Unimplemented bit, read as ‘0’	
-n = Value at POR	‘1’ = Bit is set	‘0’ = Bit is cleared	x = Bit is unknown

bit 15-8 **ICM4R<7:0>:** Assign SCCP Capture 4 (ICM4) Input to the Corresponding RPn Pin bits
See Table 3-30.

bit 7-0 **TCKI4R<7:0>:** Assign SCCP Timer4 (TCKI4) Input to the Corresponding RPn Pin bits
See Table 3-30.

© 2017-2018 Microchip Technology Inc.

REGISTER 3-43: RPINR7: PERIPHERAL PIN SELECT INPUT REGISTER 7

R/W-0	R/W-0	R/W-0	R/W-0	R/W-0	R/W-0	R/W-0	R/W-0
ICM5R7	ICM5R6	ICM5R5	ICM5R4	ICM5R3	ICM5R2	ICM5R1	ICM5R0
bit 15							bit 8

R/W-0	R/W-0	R/W-0	R/W-0	R/W-0	R/W-0	R/W-0	R/W-0
TCKI5R7	TCKI5R6	TCKI5R5	TCKI5R4	TCKI5R3	TCKI5R2	TCKI5R1	TCKI5R0
bit 7							bit 0

Legend:			
R = Readable bit	W = Writable bit	U = Unimplemented bit, read as ‘0’	
-n = Value at POR	‘1’ = Bit is set	‘0’ = Bit is cleared	x = Bit is unknown

bit 15-8 **ICM5R<7:0>:** Assign SCCP Capture 5 (ICM5) Input to the Corresponding RPn Pin bits
See Table 3-30.

bit 7-0 **TCKI5R<7:0>:** Assign SCCP Timer5 (TCKI5) Input to the Corresponding RPn Pin bits
See Table 3-30.

REGISTER 3-44: RPINR8: PERIPHERAL PIN SELECT INPUT REGISTER 8

R/W-0	R/W-0	R/W-0	R/W-0	R/W-0	R/W-0	R/W-0	R/W-0
ICM6R7	ICM6R6	ICM6R5	ICM6R4	ICM6R3	ICM6R2	ICM6R1	ICM6R0
bit 15							bit 8

R/W-0	R/W-0	R/W-0	R/W-0	R/W-0	R/W-0	R/W-0	R/W-0
TCKI6R7	TCKI6R6	TCKI6R5	TCKI6R4	TCKI6R3	TCKI6R2	TCKI6R1	TCKI6R0
bit 7							bit 0

Legend:			
R = Readable bit	W = Writable bit	U = Unimplemented bit, read as ‘0’	
-n = Value at POR	‘1’ = Bit is set	‘0’ = Bit is cleared	x = Bit is unknown

bit 15-8 **ICM6R<7:0>:** Assign SCCP Capture 6 (ICM6) Input to the Corresponding RPn Pin bits
See Table 3-30.

bit 7-0 **TCKI6R<7:0>:** Assign SCCP Timer6 (TCKI6) Input to the Corresponding RPn Pin bits
See Table 3-30.

REGISTER 3-45: RPINR9: PERIPHERAL PIN SELECT INPUT REGISTER 9

R/W-0	R/W-0	R/W-0	R/W-0	R/W-0	R/W-0	R/W-0	R/W-0
ICM7R7	ICM7R6	ICM7R5	ICM7R4	ICM7R3	ICM7R2	ICM7R1	ICM7R0
bit 15							bit 8

R/W-0	R/W-0	R/W-0	R/W-0	R/W-0	R/W-0	R/W-0	R/W-0
TCKI7R7	TCKI7R6	TCKI7R5	TCKI7R4	TCKI7R3	TCKI7R2	TCKI7R1	TCKI7R0
bit 7							bit 0

Legend:			
R = Readable bit	W = Writable bit	U = Unimplemented bit, read as ‘0’	
-n = Value at POR	‘1’ = Bit is set	‘0’ = Bit is cleared	x = Bit is unknown

bit 15-8 **ICM7R<7:0>:** Assign SCCP Capture 7 (ICM7) Input to the Corresponding RPn Pin bits
See Table 3-30.

bit 7-0 **TCKI7R<7:0>:** Assign SCCP Timer7 (TCKI7) Input to the Corresponding RPn Pin bits
See Table 3-30.

REGISTER 3-46: RPINR10: PERIPHERAL PIN SELECT INPUT REGISTER 10

R/W-0	R/W-0	R/W-0	R/W-0	R/W-0	R/W-0	R/W-0	R/W-0
ICM8R7	ICM8R6	ICM8R5	ICM8R4	ICM8R3	ICM8R2	ICM8R1	ICM8R0
bit 15							bit 8

R/W-0	R/W-0	R/W-0	R/W-0	R/W-0	R/W-0	R/W-0	R/W-0
TCKI8R7	TCKI8R6	TCKI8R5	TCKI8R4	TCKI8R3	TCKI8R2	TCKI8R1	TCKI8R0
bit 7							bit 0

Legend:			
R = Readable bit	W = Writable bit	U = Unimplemented bit, read as ‘0’	
-n = Value at POR	‘1’ = Bit is set	‘0’ = Bit is cleared	x = Bit is unknown

bit 15-8 **ICM8R<7:0>:** Assign SCCP Capture 8 (ICM8) Input to the Corresponding RPn Pin bits
See Table 3-30.

bit 7-0 **TCKI8R<7:0>:** Assign SCCP Timer8 (TCKI8) Input to the Corresponding RPn Pin bits
See Table 3-30.

© 2017-2018 Microchip Technology Inc.

REGISTER 3-47: RPINR11: PERIPHERAL PIN SELECT INPUT REGISTER 11

R/W-0	R/W-0	R/W-0	R/W-0	R/W-0	R/W-0	R/W-0	R/W-0
OCFBR7	OCFBR6	OCFBR5	OCFBR4	OCFBR3	OCFBR2	OCFBR1	OCFBR0
bit 15							bit 8

R/W-0	R/W-0	R/W-0	R/W-0	R/W-0	R/W-0	R/W-0	R/W-0
OCFAR7	OCFAR6	OCFAR5	OCFAR4	OCFAR3	OCFAR2	OCFAR1	OCFAR0
bit 7							bit 0

Legend:			
R = Readable bit	W = Writable bit	U = Unimplemented bit, read as ‘0’	
-n = Value at POR	‘1’ = Bit is set	‘0’ = Bit is cleared	x = Bit is unknown

bit 15-8 **OCFBR<7:0>:** Assign SCCP Fault B (OCFB) Input to the Corresponding RPn Pin bits
See Table 3-30.

bit 7-0 **OCFAR<7:0>:** Assign SCCP Fault A (OCFA) Input to the Corresponding RPn Pin bits
See Table 3-30.

REGISTER 3-48: RPINR12: PERIPHERAL PIN SELECT INPUT REGISTER 12

R/W-0	R/W-0	R/W-0	R/W-0	R/W-0	R/W-0	R/W-0	R/W-0
PCI9R7	PCI9R6	PCI9R5	PCI9R4	PCI9R3	PCI9R2	PCI9R1	PCI9R0
bit 15							bit 8

R/W-0	R/W-0	R/W-0	R/W-0	R/W-0	R/W-0	R/W-0	R/W-0
PCI8R7	PCI8R6	PCI8R5	PCI8R4	PCI8R3	PCI8R2	PCI8R1	PCI8R0
bit 7							bit 0

Legend:			
R = Readable bit	W = Writable bit	U = Unimplemented bit, read as ‘0’	
-n = Value at POR	‘1’ = Bit is set	‘0’ = Bit is cleared	x = Bit is unknown

bit 15-8 **PCI9R<7:0>:** Assign PWM Input 9 (PCI9) to the Corresponding RPn Pin bits
See Table 3-30.

bit 7-0 **PCI8R<7:0>:** Assign PWM Input 8 (PCI8) to the Corresponding RPn Pin bits
See Table 3-30.

REGISTER 3-49: RPINR13: PERIPHERAL PIN SELECT INPUT REGISTER 13

R/W-0	R/W-0	R/W-0	R/W-0	R/W-0	R/W-0	R/W-0	R/W-0
PCI11R7	PCI11R6	PCI11R5	PCI11R4	PCI11R3	PCI11R2	PCI11R1	PCI11R0
bit 15							bit 8

R/W-0	R/W-0	R/W-0	R/W-0	R/W-0	R/W-0	R/W-0	R/W-0
PCI10R7	PCI10R6	PCI10R5	PCI10R4	PCI10R3	PCI10R2	PCI10R1	PCI10R0
bit 7							bit 0

Legend:			
R = Readable bit	W = Writable bit	U = Unimplemented bit, read as ‘0’	
-n = Value at POR	‘1’ = Bit is set	‘0’ = Bit is cleared	x = Bit is unknown

bit 15-8 **PCI11R<7:0>:** Assign PWM Input 11 (PCI11) to the Corresponding RPn Pin bits
See Table 3-30.

bit 7-0 **PCI10R<7:0>:** Assign PWM Input 10 (PCI10) to the Corresponding RPn Pin bits
See Table 3-30.

REGISTER 3-50: RPINR14: PERIPHERAL PIN SELECT INPUT REGISTER 14

R/W-0	R/W-0	R/W-0	R/W-0	R/W-0	R/W-0	R/W-0	R/W-0
QEIB1R7	QEIB1R6	QEIB1R5	QEIB1R4	QEIB1R3	QEIB1R2	QEIB1R1	QEIB1R0
bit 15							bit 8

R/W-0	R/W-0	R/W-0	R/W-0	R/W-0	R/W-0	R/W-0	R/W-0
QEIA1R7	QEIA1R6	QEIA1R5	QEIA1R4	QEIA1R3	QEIA1R2	QEIA1R1	QEIA1R0
bit 7							bit 0

Legend:			
R = Readable bit	W = Writable bit	U = Unimplemented bit, read as ‘0’	
-n = Value at POR	‘1’ = Bit is set	‘0’ = Bit is cleared	x = Bit is unknown

bit 15-8 **QEIB1R<7:0>:** Assign QEI Input B (QEIB1) to the Corresponding RPn Pin bits
See Table 3-30.

bit 7-0 **QEIA1R<7:0>:** Assign QEI Input A (QEIA1) to the Corresponding RPn Pin bits
See Table 3-30.

© 2017-2018 Microchip Technology Inc.

REGISTER 3-51: RPINR15: PERIPHERAL PIN SELECT INPUT REGISTER 15

R/W-0	R/W-0	R/W-0	R/W-0	R/W-0	R/W-0	R/W-0	R/W-0
QEIHOM1R7	QEIHOM1R6	QEIHOM1R5	QEIHOM1R4	QEIHOM1R3	QEIHOM1R2	QEIHOM1R1	QEIHOM1R0
bit 15							bit 8

R/W-0	R/W-0	R/W-0	R/W-0	R/W-0	R/W-0	R/W-0	R/W-0
QEINDX1R7	QEINDX1R6	QEINDX1R5	QEINDX1R4	QEINDX1R3	QEINDX1R2	QEINDX1R1	QEINDX1R0
bit 7							bit 0

Legend:			
R = Readable bit	W = Writable bit	U = Unimplemented bit, read as ‘0’	
-n = Value at POR	‘1’ = Bit is set	‘0’ = Bit is cleared	x = Bit is unknown

bit 15-8 **QEIHOM1R<7:0>:** Assign QEI Home 1 Input (QEIHOM1) to the Corresponding RPn Pin bits
See Table 3-30.

bit 7-0 **QEINDX1R<7:0>:** Assign QEI Index 1 Input (QEINDX1) to the Corresponding RPn Pin bits
See Table 3-30.

REGISTER 3-52: RPINR18: PERIPHERAL PIN SELECT INPUT REGISTER 18

R/W-0	R/W-0	R/W-0	R/W-0	R/W-0	R/W-0	R/W-0	R/W-0
U1DSRR7	U1DSRR6	U1DSRR5	U1DSRR4	U1DSRR3	U1DSRR2	U1DSRR1	U1DSRR0
bit 15							bit 8

R/W-0	R/W-0	R/W-0	R/W-0	R/W-0	R/W-0	R/W-0	R/W-0
U1RXR7	U1RXR6	U1RXR5	U1RXR4	U1RXR3	U1RXR2	U1RXR1	U1RXR0
bit 7							bit 0

Legend:			
R = Readable bit	W = Writable bit	U = Unimplemented bit, read as ‘0’	
-n = Value at POR	‘1’ = Bit is set	‘0’ = Bit is cleared	x = Bit is unknown

bit 15-8 **U1DSRR<7:0>:** Assign UART1 Data-Set-Ready ($\overline{\text{U1DSR}}$) to the Corresponding RPn Pin bits
See Table 3-30.

bit 7-0 **U1RXR<7:0>:** Assign UART1 Receive (U1RX) to the Corresponding RPn Pin bits
See Table 3-30.

REGISTER 3-53: RPINR19: PERIPHERAL PIN SELECT INPUT REGISTER 19

R/W-0	R/W-0	R/W-0	R/W-0	R/W-0	R/W-0	R/W-0	R/W-0
U2DSRR7	U2DSRR6	U2DSRR5	U2DSRR4	U2DSRR3	U2DSRR2	U2DSRR1	U2DSRR0
bit 15							bit 8

R/W-0	R/W-0	R/W-0	R/W-0	R/W-0	R/W-0	R/W-0	R/W-0
U2RXR7	U2RXR6	U2RXR5	U2RXR4	U2RXR3	U2RXR2	U2RXR1	U2RXR0
bit 7							bit 0

Legend:			
R = Readable bit	W = Writable bit	U = Unimplemented bit, read as ‘0’	
-n = Value at POR	‘1’ = Bit is set	‘0’ = Bit is cleared	x = Bit is unknown

bit 15-8 **U2DSRR<7:0>:** Assign UART2 Data-Set-Ready ($\overline{\text{U2DSR}}$) to the Corresponding RPn Pin bits
See Table 3-30.

bit 7-0 **U2RXR<7:0>:** Assign UART2 Receive (U2RX) to the Corresponding RPn Pin bits
See Table 3-30.

REGISTER 3-54: RPINR20: PERIPHERAL PIN SELECT INPUT REGISTER 20

R/W-0	R/W-0	R/W-0	R/W-0	R/W-0	R/W-0	R/W-0	R/W-0
SCK1R7	SCK1R6	SCK1R5	SCK1R4	SCK1R3	SCK1R2	SCK1R1	SCK1R0
bit 15							bit 8

R/W-0	R/W-0	R/W-0	R/W-0	R/W-0	R/W-0	R/W-0	R/W-0
SDI1R7	SDI1R6	SDI1R5	SDI1R4	SDI1R3	SDI1R2	SDI1R1	SDI1R0
bit 7							bit 0

Legend:			
R = Readable bit	W = Writable bit	U = Unimplemented bit, read as ‘0’	
-n = Value at POR	‘1’ = Bit is set	‘0’ = Bit is cleared	x = Bit is unknown

bit 15-8 **SCK1R<7:0>:** Assign SPI1 Clock Input (SCK1IN) to the Corresponding RPn Pin bits
See Table 3-30.

bit 7-0 **SDI1R<7:0>:** Assign SPI1 Data Input (SDI1) to the Corresponding RPn Pin bits
See Table 3-30.

© 2017-2018 Microchip Technology Inc.

REGISTER 3-55: RPINR21: PERIPHERAL PIN SELECT INPUT REGISTER 21

R/W-0	R/W-0	R/W-0	R/W-0	R/W-0	R/W-0	R/W-0	R/W-0
REFOIR7	REFOIR6	REFOIR5	REFOIR4	REFOIR3	REFOIR2	REFOIR1	REFOIR0
bit 15							bit 8

R/W-0	R/W-0	R/W-0	R/W-0	R/W-0	R/W-0	R/W-0	R/W-0
SS1R7	SS1R6	SS1R5	SS1R4	SS1R3	SS1R2	SS1R1	SS1R0
bit 7							bit 0

Legend:			
R = Readable bit	W = Writable bit	U = Unimplemented bit, read as ‘0’	
-n = Value at POR	‘1’ = Bit is set	‘0’ = Bit is cleared	x = Bit is unknown

bit 15-8 **REFOIR<7:0>:** Assign Reference Clock Input (REFOI) to the Corresponding RPn Pin bits
See Table 3-30.

bit 7-0 **SS1R<7:0>:** Assign SPI1 Slave Select ($\overline{SS1}$) to the Corresponding RPn Pin bits
See Table 3-30.

REGISTER 3-56: RPINR22: PERIPHERAL PIN SELECT INPUT REGISTER 22

R/W-0	R/W-0	R/W-0	R/W-0	R/W-0	R/W-0	R/W-0	R/W-0
SCK2R7	SCK2R6	SCK2R5	SCK2R4	SCK2R3	SCK2R2	SCK2R1	SCK2R0
bit 15							bit 8

R/W-0	R/W-0	R/W-0	R/W-0	R/W-0	R/W-0	R/W-0	R/W-0
SDI2R7	SDI2R6	SDI2R5	SDI2R4	SDI2R3	SDI2R2	SDI2R1	SDI2R0
bit 7							bit 0

Legend:			
R = Readable bit	W = Writable bit	U = Unimplemented bit, read as ‘0’	
-n = Value at POR	‘1’ = Bit is set	‘0’ = Bit is cleared	x = Bit is unknown

bit 15-8 **SCK2R<7:0>:** Assign SPI2 Clock Input (SCK2IN) to the Corresponding RPn Pin bits
See Table 3-30.

bit 7-0 **SDI2R<7:0>:** Assign SPI2 Data Input (SDI2) to the Corresponding RPn Pin bits
See Table 3-30.

REGISTER 3-57: RPINR23: PERIPHERAL PIN SELECT INPUT REGISTER 23

R/W-0	R/W-0	R/W-0	R/W-0	R/W-0	R/W-0	R/W-0	R/W-0
U1CTSR7	U1CTSR6	U1CTSR5	U1CTSR4	U1CTSR3	U1CTSR2	U1CTSR1	U1CTSR0
bit 15							bit 8

R/W-0	R/W-0	R/W-0	R/W-0	R/W-0	R/W-0	R/W-0	R/W-0
SS2R7	SS2R6	SS2R5	SS2R4	SS2R3	SS2R2	SS2R1	SS2R0
bit 7							bit 0

Legend:			
R = Readable bit	W = Writable bit	U = Unimplemented bit, read as ‘0’	
-n = Value at POR	‘1’ = Bit is set	‘0’ = Bit is cleared	x = Bit is unknown

bit 15-8 **U1CTSR<7:0>:** Assign UART1 Clear-to-Send ($\overline{\text{U1CTS}}$) to the Corresponding RPn Pin bits
See Table 3-30.

bit 7-0 **SS2R<7:0>:** Assign SPI2 Slave Select ($\overline{\text{SS2}}$) to the Corresponding RPn Pin bits
See Table 3-30.

REGISTER 3-58: RPINR26: PERIPHERAL PIN SELECT INPUT REGISTER 26

U-0	U-0	U-0	U-0	U-0	U-0	U-0	U-0
—	—	—	—	—	—	—	—
bit 15							bit 8

R/W-0	R/W-0	R/W-0	R/W-0	R/W-0	R/W-0	R/W-0	R/W-0
CAN1RXR7	CAN1RXR6	CAN1RXR5	CAN1RXR4	CAN1RXR3	CAN1RXR2	CAN1RXR1	CAN1RXR0
bit 7							bit 0

Legend:			
R = Readable bit	W = Writable bit	U = Unimplemented bit, read as ‘0’	
-n = Value at POR	‘1’ = Bit is set	‘0’ = Bit is cleared	x = Bit is unknown

bit 15-8 **Unimplemented:** Read as ‘0’

bit 7-0 **CAN1RXR<7:0>:** Assign CAN1 Input (CAN1RX) to the Corresponding RPn Pin bits
See Table 3-30.

© 2017-2018 Microchip Technology Inc.

REGISTER 3-59: RPINR30: PERIPHERAL PIN SELECT INPUT REGISTER 30

R/W-0	R/W-0	R/W-0	R/W-0	R/W-0	R/W-0	R/W-0	R/W-0
U2CTSR7	U2CTSR6	U2CTSR5	U2CTSR4	U2CTSR3	U2CTSR2	U2CTSR1	U2CTSR0
bit 15							bit 8

U-0	U-0	U-0	U-0	U-0	U-0	U-0	U-0
—	—	—	—	—	—	—	—
bit 7							bit 0

Legend:			
R = Readable bit	W = Writable bit	U = Unimplemented bit, read as ‘0’	
-n = Value at POR	‘1’ = Bit is set	‘0’ = Bit is cleared	x = Bit is unknown

bit 15-8 **U2CTSR<7:0>:** Assign UART2 Clear-to-Send ($\overline{\text{U2CTS}}$) to the Corresponding RPn Pin bits
See Table 3-30.

bit 7-0 **Unimplemented:** Read as ‘0’

REGISTER 3-60: RPINR37: PERIPHERAL PIN SELECT INPUT REGISTER 37

R/W-0	R/W-0	R/W-0	R/W-0	R/W-0	R/W-0	R/W-0	R/W-0
PCI17R7	PCI17R6	PCI17R5	PCI17R4	PCI17R3	PCI17R2	PCI17R1	PCI17R0
bit 15							bit 8

U-0	U-0	U-0	U-0	U-0	U-0	U-0	U-0
—	—	—	—	—	—	—	—
bit 7							bit 0

Legend:			
R = Readable bit	W = Writable bit	U = Unimplemented bit, read as ‘0’	
-n = Value at POR	‘1’ = Bit is set	‘0’ = Bit is cleared	x = Bit is unknown

bit 15-8 **PCI17R<7:0>:** Assign PWM Input 17 (PCI17) to the Corresponding RPn Pin bits
See Table 3-30.

bit 7-0 **Unimplemented:** Read as ‘0’

REGISTER 3-61: RPINR38: PERIPHERAL PIN SELECT INPUT REGISTER 38

U-0	U-0	U-0	U-0	U-0	U-0	U-0	U-0
—	—	—	—	—	—	—	—
bit 15							bit 8

R/W-0	R/W-0	R/W-0	R/W-0	R/W-0	R/W-0	R/W-0	R/W-0
PCI18R7	PCI18R6	PCI18R5	PCI18R4	PCI18R3	PCI18R2	PCI18R1	PCI18R0
bit 7							bit 0

Legend:			
R = Readable bit	W = Writable bit	U = Unimplemented bit, read as ‘0’	
-n = Value at POR	‘1’ = Bit is set	‘0’ = Bit is cleared	x = Bit is unknown

bit 15-8 **Unimplemented:** Read as ‘0’

bit 7-0 **PCI18R<7:0>:** Assign PWM Input 18 (PCI18) to the Corresponding RPn Pin bits
See Table 3-30.

REGISTER 3-62: RPINR42: PERIPHERAL PIN SELECT INPUT REGISTER 42

R/W-0	R/W-0	R/W-0	R/W-0	R/W-0	R/W-0	R/W-0	R/W-0
PCI13R7	PCI13R6	PCI13R5	PCI13R4	PCI13R3	PCI13R2	PCI13R1	PCI13R0
bit 15							bit 8

R/W-0	R/W-0	R/W-0	R/W-0	R/W-0	R/W-0	R/W-0	R/W-0
PCI12R7	PCI12R6	PCI12R5	PCI12R4	PCI12R3	PCI12R2	PCI12R1	PCI12R0
bit 7							bit 0

Legend:			
R = Readable bit	W = Writable bit	U = Unimplemented bit, read as ‘0’	
-n = Value at POR	‘1’ = Bit is set	‘0’ = Bit is cleared	x = Bit is unknown

bit 15-8 **PCI13R<7:0>:** Assign PWM Input 13 (PCI13) to the Corresponding RPn Pin bits
See Table 3-30.

bit 7-0 **PCI12R<7:0>:** Assign PWM Input 12 (PCI12) to the Corresponding RPn Pin bits
See Table 3-30.

© 2017-2018 Microchip Technology Inc.

REGISTER 3-63: RPINR43: PERIPHERAL PIN SELECT INPUT REGISTER 43

R/W-0	R/W-0	R/W-0	R/W-0	R/W-0	R/W-0	R/W-0	R/W-0
PCI15R7	PCI15R6	PCI15R5	PCI15R4	PCI15R3	PCI15R2	PCI15R1	PCI15R0
bit 15							bit 8

R/W-0	R/W-0	R/W-0	R/W-0	R/W-0	R/W-0	R/W-0	R/W-0
PCI14R7	PCI14R6	PCI14R5	PCI14R4	PCI14R3	PCI14R2	PCI14R1	PCI14R0
bit 7							bit 0

Legend:			
R = Readable bit	W = Writable bit	U = Unimplemented bit, read as ‘0’	
-n = Value at POR	‘1’ = Bit is set	‘0’ = Bit is cleared	x = Bit is unknown

bit 15-8 **PCI15R<7:0>:** Assign PWM Input 15 (PCI15) to the Corresponding RPn Pin bits
See Table 3-30.

bit 7-0 **PCI14R<7:0>:** Assign PWM Input 14 (PCI14) to the Corresponding RPn Pin bits
See Table 3-30.

REGISTER 3-64: RPINR44: PERIPHERAL PIN SELECT INPUT REGISTER 44

R/W-0	R/W-0	R/W-0	R/W-0	R/W-0	R/W-0	R/W-0	R/W-0
SENT1R7	SENT1R6	SENT1R5	SENT1R4	SENT1R3	SENT1R2	SENT1R1	SENT1R0
bit 15							bit 8

R/W-0	R/W-0	R/W-0	R/W-0	R/W-0	R/W-0	R/W-0	R/W-0
PCI16R7	PCI16R6	PCI16R5	PCI16R4	PCI16R3	PCI16R2	PCI16R1	PCI16R0
bit 7							bit 0

Legend:			
R = Readable bit	W = Writable bit	U = Unimplemented bit, read as ‘0’	
-n = Value at POR	‘1’ = Bit is set	‘0’ = Bit is cleared	x = Bit is unknown

bit 15-8 **SENT1R<7:0>:** Assign SENT1 Input (SENT1) to the Corresponding RPn Pin bits
See Table 3-30.

bit 7-0 **PCI16<7:0>:** Assign PWM Input 16 (PCI16) to the Corresponding RPn Pin bits
See Table 3-30.

REGISTER 3-65: RPINR45: PERIPHERAL PIN SELECT INPUT REGISTER 45

R/W-0	R/W-0	R/W-0	R/W-0	R/W-0	R/W-0	R/W-0	R/W-0
CLCINAR7	CLCINAR6	CLCINAR5	CLCINAR4	CLCINAR3	CLCINAR2	CLCINAR1	CLCINAR0
bit 15							bit 8

R/W-0	R/W-0	R/W-0	R/W-0	R/W-0	R/W-0	R/W-0	R/W-0
SENT2R7	SENT2R6	SENT2R5	SENT2R4	SENT2R3	SENT2R2	SENT2R1	SENT2R0
bit 7							bit 0

Legend:			
R = Readable bit	W = Writable bit	U = Unimplemented bit, read as ‘0’	
-n = Value at POR	‘1’ = Bit is set	‘0’ = Bit is cleared	x = Bit is unknown

bit 15-8 **CLCINAR<7:0>:** Assign CLC Input A (CLCINA) to the Corresponding RPn Pin bits
See Table 3-30.

bit 7-0 **SENT2R<7:0>:** Assign SENT2 Input (SENT2) to the Corresponding RPn Pin bits
See Table 3-30.

REGISTER 3-66: RPINR46: PERIPHERAL PIN SELECT INPUT REGISTER 46

R/W-0	R/W-0	R/W-0	R/W-0	R/W-0	R/W-0	R/W-0	R/W-0
CLCINCR7	CLCINCR6	CLCINCR5	CLCINCR4	CLCINCR3	CLCINCR2	CLCINCR1	CLCINCR0
bit 15							bit 8

R/W-0	R/W-0	R/W-0	R/W-0	R/W-0	R/W-0	R/W-0	R/W-0
CLCINBR7	CLCINBR6	CLCINBR5	CLCINBR4	CLCINBR3	CLCINBR2	CLCINBR1	CLCINBR0
bit 7							bit 0

Legend:			
R = Readable bit	W = Writable bit	U = Unimplemented bit, read as ‘0’	
-n = Value at POR	‘1’ = Bit is set	‘0’ = Bit is cleared	x = Bit is unknown

bit 15-8 **CLCINCR<7:0>:** Assign CLC Input C (CLCINC) to the Corresponding RPn Pin bits
See Table 3-30.

bit 7-0 **CLCINBR<7:0>:** Assign CLC Input B (CLCINB) to the Corresponding RPn Pin bits
See Table 3-30.

© 2017-2018 Microchip Technology Inc.

REGISTER 3-67: RPINR47: PERIPHERAL PIN SELECT INPUT REGISTER 47

R/W-0	R/W-0	R/W-0	R/W-0	R/W-0	R/W-0	R/W-0	R/W-0
ADCTRGR7	ADCTRGR6	ADCTRGR5	ADCTRGR4	ADCTRGR3	ADCTRGR2	ADCTRGR1	ADCTRGR0
bit 15							bit 8

R/W-0	R/W-0	R/W-0	R/W-0	R/W-0	R/W-0	R/W-0	R/W-0
CLCINDR7	CLCINDR6	CLCINDR5	CLCINDR4	CLCINDR3	CLCINDR2	CLCINDR1	CLCINDR0
bit 7							bit 0

Legend:			
R = Readable bit	W = Writable bit	U = Unimplemented bit, read as ‘0’	
-n = Value at POR	‘1’ = Bit is set	‘0’ = Bit is cleared	x = Bit is unknown

bit 15-8 **ADCTRGR<7:0>:** Assign ADC Trigger Input (ADCTRG) to the Corresponding RPn Pin bits
See Table 3-30.

bit 7-0 **CLCINDR<7:0>:** Assign CLC Input D (CLCIND) to the Corresponding RPn Pin bits
See Table 3-30.

REGISTER 3-68: RPOR0: PERIPHERAL PIN SELECT OUTPUT REGISTER 0

U-0	U-0	R/W-0	R/W-0	R/W-0	R/W-0	R/W-0	R/W-0
—	—	RP33R5	RP33R4	RP33R3	RP33R2	RP33R1	RP33R0
bit 15							bit 8

U-0	U-0	R/W-0	R/W-0	R/W-0	R/W-0	R/W-0	R/W-0
—	—	RP32R5	RP32R4	RP32R3	RP32R2	RP32R1	RP32R0
bit 7							bit 0

Legend:			
R = Readable bit	W = Writable bit	U = Unimplemented bit, read as ‘0’	
-n = Value at POR	‘1’ = Bit is set	‘0’ = Bit is cleared	x = Bit is unknown

bit 15-14 **Unimplemented:** Read as ‘0’

bit 13-8 **RP33R<5:0>:** Peripheral Output Function is Assigned to RP33 Output Pin bits (see Table 3-33 for peripheral function numbers)

bit 7-6 **Unimplemented:** Read as ‘0’

bit 5-0 **RP32R<5:0>:** Peripheral Output Function is Assigned to RP32 Output Pin bits (see Table 3-33 for peripheral function numbers)

REGISTER 3-69: RPOR1: PERIPHERAL PIN SELECT OUTPUT REGISTER 1

U-0	U-0	R/W-0	R/W-0	R/W-0	R/W-0	R/W-0	R/W-0
—	—	RP35R5	RP35R4	RP35R3	RP35R2	RP35R1	RP35R0
bit 15							bit 8

U-0	U-0	R/W-0	R/W-0	R/W-0	R/W-0	R/W-0	R/W-0
—	—	RP34R5	RP34R4	RP34R3	RP34R2	RP34R1	RP34R0
bit 7							bit 0

Legend:			
R = Readable bit	W = Writable bit	U = Unimplemented bit, read as ‘0’	
-n = Value at POR	‘1’ = Bit is set	‘0’ = Bit is cleared	x = Bit is unknown

bit 15-14 **Unimplemented:** Read as ‘0’

bit 13-8 **RP35R<5:0>:** Peripheral Output Function is Assigned to RP35 Output Pin bits (see Table 3-33 for peripheral function numbers)

bit 7-6 **Unimplemented:** Read as ‘0’

bit 5-0 **RP34R<5:0>:** Peripheral Output Function is Assigned to RP34 Output Pin bits (see Table 3-33 for peripheral function numbers)

© 2017-2018 Microchip Technology Inc.

REGISTER 3-70: RPOR2: PERIPHERAL PIN SELECT OUTPUT REGISTER 2

U-0	U-0	R/W-0	R/W-0	R/W-0	R/W-0	R/W-0	R/W-0
—	—	RP37R5	RP37R4	RP37R3	RP37R2	RP37R1	RP37R0
bit 15							bit 8

U-0	U-0	R/W-0	R/W-0	R/W-0	R/W-0	R/W-0	R/W-0
—	—	RP36R5	RP36R4	RP36R3	RP36R2	RP36R1	RP36R0
bit 7							bit 0

Legend:			
R = Readable bit	W = Writable bit	U = Unimplemented bit, read as ‘0’	
-n = Value at POR	‘1’ = Bit is set	‘0’ = Bit is cleared	x = Bit is unknown

bit 15-14 **Unimplemented:** Read as ‘0’

bit 13-8 **RP37R<5:0>:** Peripheral Output Function is Assigned to RP37 Output Pin bits (see Table 3-33 for peripheral function numbers)

bit 7-6 **Unimplemented:** Read as ‘0’

bit 5-0 **RP36R<5:0>:** Peripheral Output Function is Assigned to RP36 Output Pin bits (see Table 3-33 for peripheral function numbers)

REGISTER 3-71: RPOR3: PERIPHERAL PIN SELECT OUTPUT REGISTER 3

U-0	U-0	R/W-0	R/W-0	R/W-0	R/W-0	R/W-0	R/W-0
—	—	RP39R5	RP39R4	RP39R3	RP39R2	RP39R1	RP39R0
bit 15							bit 8

U-0	U-0	R/W-0	R/W-0	R/W-0	R/W-0	R/W-0	R/W-0
—	—	RP38R5	RP38R5	RP38R5	RP38R5	RP38R5	RP38R5
bit 7							bit 0

Legend:			
R = Readable bit	W = Writable bit	U = Unimplemented bit, read as ‘0’	
-n = Value at POR	‘1’ = Bit is set	‘0’ = Bit is cleared	x = Bit is unknown

bit 15-14 **Unimplemented:** Read as ‘0’

bit 13-8 **RP39R<5:0>:** Peripheral Output Function is Assigned to RP39 Output Pin bits (see Table 3-33 for peripheral function numbers)

bit 7-6 **Unimplemented:** Read as ‘0’

bit 5-0 **RP38R<5:0>:** Peripheral Output Function is Assigned to RP38 Output Pin bits (see Table 3-33 for peripheral function numbers)

REGISTER 3-72: RPOR4: PERIPHERAL PIN SELECT OUTPUT REGISTER 4

U-0	U-0	R/W-0	R/W-0	R/W-0	R/W-0	R/W-0	R/W-0
—	—	RP41R5	RP41R4	RP41R3	RP41R2	RP41R1	RP41R0
bit 15							bit 8

U-0	U-0	R/W-0	R/W-0	R/W-0	R/W-0	R/W-0	R/W-0
—	—	RP40R5	RP40R4	RP40R3	RP40R2	RP40R1	RP40R0
bit 7							bit 0

Legend:			
R = Readable bit	W = Writable bit	U = Unimplemented bit, read as ‘0’	
-n = Value at POR	‘1’ = Bit is set	‘0’ = Bit is cleared	x = Bit is unknown

bit 15-14 **Unimplemented:** Read as ‘0’

bit 13-8 **RP41R<5:0>:** Peripheral Output Function is Assigned to RP41 Output Pin bits (see Table 3-33 for peripheral function numbers)

bit 7-6 **Unimplemented:** Read as ‘0’

bit 5-0 **RP40R<5:0>:** Peripheral Output Function is Assigned to RP40 Output Pin bits (see Table 3-33 for peripheral function numbers)

REGISTER 3-73: RPOR5: PERIPHERAL PIN SELECT OUTPUT REGISTER 5

U-0	U-0	R/W-0	R/W-0	R/W-0	R/W-0	R/W-0	R/W-0
—	—	RP43R5	RP43R4	RP43R3	RP43R2	RP43R1	RP43R0
bit 15							bit 8

U-0	U-0	R/W-0	R/W-0	R/W-0	R/W-0	R/W-0	R/W-0
—	—	RP42R5	RP42R4	RP42R3	RP42R2	RP42R1	RP42R0
bit 7							bit 0

Legend:			
R = Readable bit	W = Writable bit	U = Unimplemented bit, read as ‘0’	
-n = Value at POR	‘1’ = Bit is set	‘0’ = Bit is cleared	x = Bit is unknown

bit 15-14 **Unimplemented:** Read as ‘0’

bit 13-8 **RP43R<5:0>:** Peripheral Output Function is Assigned to RP43 Output Pin bits (see Table 3-33 for peripheral function numbers)

bit 7-6 **Unimplemented:** Read as ‘0’

bit 5-0 **RP42R<5:0>:** Peripheral Output Function is Assigned to RP42 Output Pin bits (see Table 3-33 for peripheral function numbers)

© 2017-2018 Microchip Technology Inc.

REGISTER 3-74: RPOR6: PERIPHERAL PIN SELECT OUTPUT REGISTER 6

U-0	U-0	R/W-0	R/W-0	R/W-0	R/W-0	R/W-0	R/W-0
—	—	RP45R5	RP45R4	RP45R3	RP45R2	RP45R1	RP45R0
bit 15							bit 8

U-0	U-0	R/W-0	R/W-0	R/W-0	R/W-0	R/W-0	R/W-0
—	—	RP44R5	RP44R4	RP44R3	RP44R2	RP44R1	RP44R0
bit 7							bit 0

Legend:			
R = Readable bit	W = Writable bit	U = Unimplemented bit, read as ‘0’	
-n = Value at POR	‘1’ = Bit is set	‘0’ = Bit is cleared	x = Bit is unknown

bit 15-14 **Unimplemented:** Read as ‘0’

bit 13-8 **RP45R<5:0>:** Peripheral Output Function is Assigned to RP45 Output Pin bits (see Table 3-33 for peripheral function numbers)

bit 7-6 **Unimplemented:** Read as ‘0’

bit 5-0 **RP44R<5:0>:** Peripheral Output Function is Assigned to RP44 Output Pin bits (see Table 3-33 for peripheral function numbers)

REGISTER 3-75: RPOR7: PERIPHERAL PIN SELECT OUTPUT REGISTER 7

U-0	U-0	R/W-0	R/W-0	R/W-0	R/W-0	R/W-0	R/W-0
—	—	RP47R5	RP47R4	RP47R3	RP47R2	RP47R1	RP47R0
bit 15							bit 8

U-0	U-0	R/W-0	R/W-0	R/W-0	R/W-0	R/W-0	R/W-0
—	—	RP46R5	RP46R4	RP46R3	RP46R2	RP46R1	RP46R0
bit 7							bit 0

Legend:			
R = Readable bit	W = Writable bit	U = Unimplemented bit, read as ‘0’	
-n = Value at POR	‘1’ = Bit is set	‘0’ = Bit is cleared	x = Bit is unknown

bit 15-14 **Unimplemented:** Read as ‘0’

bit 13-8 **RP47R<5:0>:** Peripheral Output Function is Assigned to RP47 Output Pin bits (see Table 3-33 for peripheral function numbers)

bit 7-6 **Unimplemented:** Read as ‘0’

bit 5-0 **RP46R<5:0>:** Peripheral Output Function is Assigned to RP46 Output Pin bits (see Table 3-33 for peripheral function numbers)

REGISTER 3-76: RPOR8: PERIPHERAL PIN SELECT OUTPUT REGISTER 8

U-0	U-0	R/W-0	R/W-0	R/W-0	R/W-0	R/W-0	R/W-0
—	—	RP49R5	RP49R4	RP49R3	RP49R2	RP49R1	RP49R0
bit 15							bit 8

U-0	U-0	R/W-0	R/W-0	R/W-0	R/W-0	R/W-0	R/W-0
—	—	RP48R5	RP48R4	RP48R3	RP48R2	RP48R1	RP48R0
bit 7							bit 0

Legend:			
R = Readable bit	W = Writable bit	U = Unimplemented bit, read as ‘0’	
-n = Value at POR	‘1’ = Bit is set	‘0’ = Bit is cleared	x = Bit is unknown

bit 15-14 **Unimplemented:** Read as ‘0’

bit 13-8 **RP49R<5:0>:** Peripheral Output Function is Assigned to RP49 Output Pin bits (see Table 3-33 for peripheral function numbers)

bit 7-6 **Unimplemented:** Read as ‘0’

bit 5-0 **RP48R<5:0>:** Peripheral Output Function is Assigned to RP48 Output Pin bits (see Table 3-33 for peripheral function numbers)

REGISTER 3-77: RPOR9: PERIPHERAL PIN SELECT OUTPUT REGISTER 9

U-0	U-0	R/W-0	R/W-0	R/W-0	R/W-0	R/W-0	R/W-0
—	—	RP51R5	RP51R4	RP51R3	RP51R2	RP51R1	RP51R0
bit 15							bit 8

U-0	U-0	R/W-0	R/W-0	R/W-0	R/W-0	R/W-0	R/W-0
—	—	RP50R5	RP50R4	RP50R3	RP50R2	RP50R1	RP50R0
bit 7							bit 0

Legend:			
R = Readable bit	W = Writable bit	U = Unimplemented bit, read as ‘0’	
-n = Value at POR	‘1’ = Bit is set	‘0’ = Bit is cleared	x = Bit is unknown

bit 15-14 **Unimplemented:** Read as ‘0’

bit 13-8 **RP51R<5:0>:** Peripheral Output Function is Assigned to RP51 Output Pin bits (see Table 3-33 for peripheral function numbers)

bit 7-6 **Unimplemented:** Read as ‘0’

bit 5-0 **RP50R<5:0>:** Peripheral Output Function is Assigned to RP50 Output Pin bits (see Table 3-33 for peripheral function numbers)

© 2017-2018 Microchip Technology Inc.

REGISTER 3-78: RPOR10: PERIPHERAL PIN SELECT OUTPUT REGISTER 10

U-0	U-0	R/W-0	R/W-0	R/W-0	R/W-0	R/W-0	R/W-0
—	—	RP53R5	RP53R4	RP53R3	RP53R2	RP53R1	RP53R0
bit 15							bit 8

U-0	U-0	R/W-0	R/W-0	R/W-0	R/W-0	R/W-0	R/W-0
—	—	RP52R5	RP52R4	RP52R3	RP52R2	RP52R1	RP52R0
bit 7							bit 0

Legend:			
R = Readable bit	W = Writable bit	U = Unimplemented bit, read as ‘0’	
-n = Value at POR	‘1’ = Bit is set	‘0’ = Bit is cleared	x = Bit is unknown

bit 15-14 **Unimplemented:** Read as ‘0’

bit 13-8 **RP53<5:0>:** Peripheral Output Function is Assigned to RP53 Output Pin bits (see Table 3-33 for peripheral function numbers)

bit 7-6 **Unimplemented:** Read as ‘0’

bit 5-0 **RP52R<5:0>:** Peripheral Output Function is Assigned to RP52 Output Pin bits (see Table 3-33 for peripheral function numbers)

REGISTER 3-79: RPOR11: PERIPHERAL PIN SELECT OUTPUT REGISTER 11

U-0	U-0	R/W-0	R/W-0	R/W-0	R/W-0	R/W-0	R/W-0
—	—	RP55R5	RP55R4	RP55R3	RP55R2	RP55R1	RP55R0
bit 15							bit 8

U-0	U-0	R/W-0	R/W-0	R/W-0	R/W-0	R/W-0	R/W-0
—	—	RP54R5	RP54R4	RP54R3	RP54R2	RP54R1	RP54R0
bit 7							bit 0

Legend:			
R = Readable bit	W = Writable bit	U = Unimplemented bit, read as ‘0’	
-n = Value at POR	‘1’ = Bit is set	‘0’ = Bit is cleared	x = Bit is unknown

bit 15-14 **Unimplemented:** Read as ‘0’

bit 13-8 **RP55R<5:0>:** Peripheral Output Function is Assigned to RP55 Output Pin bits (see Table 3-33 for peripheral function numbers)

bit 7-6 **Unimplemented:** Read as ‘0’

bit 5-0 **RP54R<5:0>:** Peripheral Output Function is Assigned to RP54 Output Pin bits (see Table 3-33 for peripheral function numbers)

REGISTER 3-80: RPOR12: PERIPHERAL PIN SELECT OUTPUT REGISTER 12

U-0	U-0	R/W-0	R/W-0	R/W-0	R/W-0	R/W-0	R/W-0
—	—	RP57R5	RP57R4	RP57R3	RP57R2	RP57R1	RP57R0
bit 15							bit 8

U-0	U-0	R/W-0	R/W-0	R/W-0	R/W-0	R/W-0	R/W-0
—	—	RP56R5	RP56R4	RP56R3	RP56R2	RP56R1	RP56R0
bit 7							bit 0

Legend:			
R = Readable bit	W = Writable bit	U = Unimplemented bit, read as ‘0’	
-n = Value at POR	‘1’ = Bit is set	‘0’ = Bit is cleared	x = Bit is unknown

bit 15-14 **Unimplemented:** Read as ‘0’

bit 13-8 **RP57R<5:0>:** Peripheral Output Function is Assigned to RP57 Output Pin bits (see Table 3-33 for peripheral function numbers)

bit 7-6 **Unimplemented:** Read as ‘0’

bit 5-0 **RP56R<5:0>:** Peripheral Output Function is Assigned to RP56 Output Pin bits (see Table 3-33 for peripheral function numbers)

REGISTER 3-81: RPOR13: PERIPHERAL PIN SELECT OUTPUT REGISTER 13

U-0	U-0	R/W-0	R/W-0	R/W-0	R/W-0	R/W-0	R/W-0
—	—	RP59R5	RP59R4	RP59R3	RP59R2	RP59R1	RP59R0
bit 15							bit 8

U-0	U-0	R/W-0	R/W-0	R/W-0	R/W-0	R/W-0	R/W-0
—	—	RP58R5	RP58R4	RP58R3	RP58R2	RP58R1	RP58R0
bit 7							bit 0

Legend:			
R = Readable bit	W = Writable bit	U = Unimplemented bit, read as ‘0’	
-n = Value at POR	‘1’ = Bit is set	‘0’ = Bit is cleared	x = Bit is unknown

bit 15-14 **Unimplemented:** Read as ‘0’

bit 13-8 **RP59R<5:0>:** Peripheral Output Function is Assigned to RP59 Output Pin bits (see Table 3-33 for peripheral function numbers)

bit 7-6 **Unimplemented:** Read as ‘0’

bit 5-0 **RP58R<5:0>:** Peripheral Output Function is Assigned to RP58 Output Pin bits (see Table 3-33 for peripheral function numbers)

© 2017-2018 Microchip Technology Inc.

REGISTER 3-82: RPOR14: PERIPHERAL PIN SELECT OUTPUT REGISTER 14

U-0	U-0	R/W-0	R/W-0	R/W-0	R/W-0	R/W-0	R/W-0
—	—	RP61R5	RP61R4	RP61R3	RP61R2	RP61R1	RP61R0
bit 15							bit 8

U-0	U-0	R/W-0	R/W-0	R/W-0	R/W-0	R/W-0	R/W-0
—	—	RP60R5	RP60R4	RP60R3	RP60R2	RP60R1	RP60R0
bit 7							bit 0

Legend:			
R = Readable bit	W = Writable bit	U = Unimplemented bit, read as ‘0’	
-n = Value at POR	‘1’ = Bit is set	‘0’ = Bit is cleared	x = Bit is unknown

bit 15-14 **Unimplemented:** Read as ‘0’

bit 13-8 **RP61R<5:0>:** Peripheral Output Function is Assigned to RP61 Output Pin bits (see Table 3-33 for peripheral function numbers)

bit 7-6 **Unimplemented:** Read as ‘0’

bit 5-0 **RP60R<5:0>:** Peripheral Output Function is Assigned to RP60 Output Pin bits (see Table 3-33 for peripheral function numbers)

REGISTER 3-83: RPOR15: PERIPHERAL PIN SELECT OUTPUT REGISTER 15

U-0	U-0	R/W-0	R/W-0	R/W-0	R/W-0	R/W-0	R/W-0
—	—	RP63R5	RP63R4	RP63R3	RP63R2	RP63R1	RP63R0
bit 15							bit 8

U-0	U-0	R/W-0	R/W-0	R/W-0	R/W-0	R/W-0	R/W-0
—	—	RP62R5	RP62R4	RP62R3	RP62R2	RP62R1	RP62R0
bit 7							bit 0

Legend:			
R = Readable bit	W = Writable bit	U = Unimplemented bit, read as ‘0’	
-n = Value at POR	‘1’ = Bit is set	‘0’ = Bit is cleared	x = Bit is unknown

bit 15-14 **Unimplemented:** Read as ‘0’

bit 13-8 **RP63R<5:0>:** Peripheral Output Function is Assigned to RP63 Output Pin bits (see Table 3-33 for peripheral function numbers)

bit 7-6 **Unimplemented:** Read as ‘0’

bit 5-0 **RP62R<5:0>:** Peripheral Output Function is Assigned to RP62 Output Pin bits (see Table 3-33 for peripheral function numbers)

REGISTER 3-84: RPOR16: PERIPHERAL PIN SELECT OUTPUT REGISTER 16

U-0	U-0	R/W-0	R/W-0	R/W-0	R/W-0	R/W-0	R/W-0
—	—	RP65R5	RP65R4	RP65R3	RP65R2	RP65R1	RP65R0
bit 15							bit 8

U-0	U-0	R/W-0	R/W-0	R/W-0	R/W-0	R/W-0	R/W-0
—	—	RP64R5	RP64R4	RP64R3	RP64R2	RP64R1	RP64R0
bit 7							bit 0

Legend:			
R = Readable bit	W = Writable bit	U = Unimplemented bit, read as ‘0’	
-n = Value at POR	‘1’ = Bit is set	‘0’ = Bit is cleared	x = Bit is unknown

bit 15-14 **Unimplemented:** Read as ‘0’

bit 13-8 **RP65R<5:0>:** Peripheral Output Function is Assigned to RP65 Output Pin bits (see Table 3-33 for peripheral function numbers)

bit 7-6 **Unimplemented:** Read as ‘0’

bit 5-0 **RP64R<5:0>:** Peripheral Output Function is Assigned to RP64 Output Pin bits (see Table 3-33 for peripheral function numbers)

REGISTER 3-85: RPOR17: PERIPHERAL PIN SELECT OUTPUT REGISTER 17

U-0	U-0	R/W-0	R/W-0	R/W-0	R/W-0	R/W-0	R/W-0
—	—	RP67R5	RP67R4	RP67R3	RP67R2	RP67R1	RP67R0
bit 15							bit 8

U-0	U-0	R/W-0	R/W-0	R/W-0	R/W-0	R/W-0	R/W-0
—	—	RP66R5	RP66R4	RP66R3	RP66R2	RP66R1	RP66R0
bit 7							bit 0

Legend:			
R = Readable bit	W = Writable bit	U = Unimplemented bit, read as ‘0’	
-n = Value at POR	‘1’ = Bit is set	‘0’ = Bit is cleared	x = Bit is unknown

bit 15-14 **Unimplemented:** Read as ‘0’

bit 13-8 **RP67R<5:0>:** Peripheral Output Function is Assigned to RP67 Output Pin bits (see Table 3-33 for peripheral function numbers)

bit 7-6 **Unimplemented:** Read as ‘0’

bit 5-0 **RP66R<5:0>:** Peripheral Output Function is Assigned to RP66 Output Pin bits (see Table 3-33 for peripheral function numbers)

© 2017-2018 Microchip Technology Inc.

REGISTER 3-86: RPOR18: PERIPHERAL PIN SELECT OUTPUT REGISTER 18

U-0	U-0	R/W-0	R/W-0	R/W-0	R/W-0	R/W-0	R/W-0
—	—	RP69R5	RP69R4	RP69R3	RP69R2	RP69R1	RP69R0
bit 15							bit 8

U-0	U-0	R/W-0	R/W-0	R/W-0	R/W-0	R/W-0	R/W-0
—	—	RP68R5	RP68R4	RP68R3	RP68R2	RP68R1	RP68R0
bit 7							bit 0

Legend:			
R = Readable bit	W = Writable bit	U = Unimplemented bit, read as ‘0’	
-n = Value at POR	‘1’ = Bit is set	‘0’ = Bit is cleared	x = Bit is unknown

bit 15-14 **Unimplemented:** Read as ‘0’

bit 13-8 **RP69R<5:0>:** Peripheral Output Function is Assigned to RP69 Output Pin bits (see Table 3-33 for peripheral function numbers)

bit 7-6 **Unimplemented:** Read as ‘0’

bit 5-0 **RP68R<5:0>:** Peripheral Output Function is Assigned to RP68 Output Pin bits (see Table 3-33 for peripheral function numbers)

REGISTER 3-87: RPOR19: PERIPHERAL PIN SELECT OUTPUT REGISTER 19

U-0	U-0	R/W-0	R/W-0	R/W-0	R/W-0	R/W-0	R/W-0
—	—	RP71R5	RP71R4	RP71R3	RP71R2	RP71R1	RP71R0
bit 15							bit 8

U-0	U-0	R/W-0	R/W-0	R/W-0	R/W-0	R/W-0	R/W-0
—	—	RP70R5	RP70R4	RP70R3	RP70R2	RP70R1	RP70R0
bit 7							bit 0

Legend:			
R = Readable bit	W = Writable bit	U = Unimplemented bit, read as ‘0’	
-n = Value at POR	‘1’ = Bit is set	‘0’ = Bit is cleared	x = Bit is unknown

bit 15-14 **Unimplemented:** Read as ‘0’

bit 13-8 **RP71R<5:0>:** Peripheral Output Function is Assigned to RP71 Output Pin bits (see Table 3-33 for peripheral function numbers)

bit 7-6 **Unimplemented:** Read as ‘0’

bit 5-0 **RP70R<5:0>:** Peripheral Output Function is Assigned to RP70 Output Pin bits (see Table 3-33 for peripheral function numbers)

REGISTER 3-88: RPOR20: PERIPHERAL PIN SELECT OUTPUT REGISTER 20

U-0	U-0	R/W-0	R/W-0	R/W-0	R/W-0	R/W-0	R/W-0
—	—	RP177R5(1)	RP177R4(1)	RP177R3(1)	RP177R2(1)	RP177R1(1)	RP177R0(1)
bit 15							bit 8

U-0	U-0	R/W-0	R/W-0	R/W-0	R/W-0	R/W-0	R/W-0
—	—	RP176R5(1)	RP176R4(1)	RP176R3(1)	RP176R2(1)	RP176R1(1)	RP176R0(1)
bit 7							bit 0

Legend:			
R = Readable bit	W = Writable bit	U = Unimplemented bit, read as ‘0’	
-n = Value at POR	‘1’ = Bit is set	‘0’ = Bit is cleared	x = Bit is unknown

bit 15-14 **Unimplemented:** Read as ‘0’

bit 13-8 **RP177R<5:0>:** Peripheral Output Function is Assigned to RP177 Output Pin bits(1) (see Table 3-33 for peripheral function numbers)

bit 7-6 **Unimplemented:** Read as ‘0’

bit 5-0 **RP176R<5:0>:** Peripheral Output Function is Assigned to RP176 Output Pin bits(1) (see Table 3-33 for peripheral function numbers)

Note 1: These are virtual output ports.

REGISTER 3-89: RPOR21: PERIPHERAL PIN SELECT OUTPUT REGISTER 21

U-0	U-0	R/W-0	R/W-0	R/W-0	R/W-0	R/W-0	R/W-0
—	—	RP179R5(1)	RP179R4(1)	RP179R3(1)	RP179R2(1)	RP179R1(1)	RP179R0(1)
bit 15							bit 8

U-0	U-0	R/W-0	R/W-0	R/W-0	R/W-0	R/W-0	R/W-0
—	—	RP178R5(1)	RP178R4(1)	RP178R3(1)	RP178R2(1)	RP178R1(1)	RP178R0(1)
bit 7							bit 0

Legend:			
R = Readable bit	W = Writable bit	U = Unimplemented bit, read as ‘0’	
-n = Value at POR	‘1’ = Bit is set	‘0’ = Bit is cleared	x = Bit is unknown

bit 15-14 **Unimplemented:** Read as ‘0’

bit 13-8 **RP179R<5:0>:** Peripheral Output Function is Assigned to RP179 Output Pin bits(1) (see Table 3-33 for peripheral function numbers)

bit 7-6 **Unimplemented:** Read as ‘0’

bit 5-0 **RP178R<5:0>:** Peripheral Output Function is Assigned to RP178 Output Pin bits(1) (see Table 3-33 for peripheral function numbers)

Note 1: These are virtual output ports.

© 2017-2018 Microchip Technology Inc.

REGISTER 3-90: RPOR22: PERIPHERAL PIN SELECT OUTPUT REGISTER 22

U-0	U-0	R/W-0	R/W-0	R/W-0	R/W-0	R/W-0	R/W-0
—	—	RP181R5(1)	RP181R4(1)	RP181R3(1)	RP181R2(1)	RP181R1(1)	RP181R0(1)
bit 15							bit 8

U-0	U-0	R/W-0	R/W-0	R/W-0	R/W-0	R/W-0	R/W-0
—	—	RP180R5(1)	RP180R4(1)	RP180R3(1)	RP180R2(1)	RP180R1(1)	RP180R0(1)
bit 7							bit 0

Legend:			
R = Readable bit	W = Writable bit	U = Unimplemented bit, read as ‘0’	
-n = Value at POR	‘1’ = Bit is set	‘0’ = Bit is cleared	x = Bit is unknown

bit 15-14 **Unimplemented:** Read as ‘0’

bit 13-8 **RP181R<5:0>:** Peripheral Output Function is Assigned to RP181 Output Pin bits (see Table 3-33 for peripheral function numbers)

bit 7-6 **Unimplemented:** Read as ‘0’

bit 5-0 **RP180R<5:0>:** Peripheral Output Function is Assigned to RP180 Output Pin bits (see Table 3-33 for peripheral function numbers)

Note 1: These are virtual output ports.

TABLE 3-39: MASTER PPS INPUT CONTROL REGISTERS

Register	Bit 15	Bit 14	Bit 13	Bit 12	Bit 11	Bit 10	Bit 9	Bit 8	Bit 7	Bit 6	Bit 5	Bit 4	Bit 3	Bit 2	Bit 1	Bit 0
RPCON	—	—	—	—	IOLOCK	—	—	—	—	—	—	—	—	—	—	—
RPINR0	INT1R7	INT1R6	INT1R5	INT1R4	INT1R3	INT1R2	INT1R1	INT1R0	—	—	—	—	—	—	—	—
RPINR1	INT3R7	INT3R6	INT3R5	INT3R4	INT3R3	INT3R2	INT3R1	INT3R0	INT2R7	INT2R6	INT2R5	INT2R4	INT2R3	INT2R2	INT2R1	INT2R0
RPINR2	T1CKR7	T1CKR6	T1CKR5	T1CKR4	T1CKR3	T1CKR2	T1CKR1	T1CKR0	—	—	—	—	—	—	—	—
RPINR3	ICM1R7	ICM1R6	ICM1R5	ICM1R4	ICM1R3	ICM1R2	ICM1R1	ICM1R0	TCKI1R7	TCKI1R6	TCKI1R5	TCKI1R4	TCKI1R3	TCKI1R2	TCKI1R1	TCKI1R0
RPINR4	ICM2R7	ICM2R6	ICM2R5	ICM2R4	ICM2R3	ICM2R2	ICM2R1	ICM2R0	TCKI2R7	TCKI2R6	TCKI2R5	TCKI2R4	TCKI2R3	TCKI2R2	TCKI2R1	TCKI2R0
RPINR5	ICM3R7	ICM3R6	ICM3R5	ICM3R4	ICM3R3	ICM3R2	ICM3R1	ICM3R0	TCKI3R7	TCKI3R6	TCKI3R5	TCKI3R4	TCKI3R3	TCKI3R2	TCKI3R1	TCKI3R0
RPINR6	ICM4R7	ICM4R6	ICM4R5	ICM4R4	ICM4R3	ICM4R2	ICM4R1	ICM4R0	TCKI4R7	TCKI4R	TCKI4R5	TCKI4R4	TCKI4R3	TCKI4R2	TCKI4R1	TCKI4R0
RPINR7	ICM5R7	ICM5R6	ICM5R5	ICM5R4	ICM5R3	ICM5R2	ICM5R1	ICM5R0	TCKI5R7	TCKI5R6	TCKI5R5	TCKI5R4	TCKI5R3	TCKI5R2	TCKI5R1	TCKI5R0
RPINR8	ICM6R7	ICM6R6	ICM6R5	ICM6R4	ICM6R3	ICM6R2	ICM6R1	ICM6R0	TCKI6R7	TCKI6R6	TCKI6R5	TCKI6R4	TCKI6R3	TCKI6R2	TCKI6R1	TCKI6R0
RPINR9	ICM7R7	ICM7R6	ICM7R5	ICM7R4	ICM7R3	ICM7R2	ICM7R1	ICM7R0	TCKI7R7	TCKI7R6	TCKI7R5	TCKI7R4	TCKI7R3	TCKI7R2	TCKI7R1	TCKI7R0
RPINR10	ICM8R7	ICM8R6	ICM8R5	ICM8R4	ICM8R3	ICM8R2	ICM8R1	ICM8R0	TCKI8R7	TCKI8R6	TCKI8R5	TCKI8R4	TCKI8R3	TCKI8R2	TCKI8R1	TCKI8R0
RPINR11	OCFBR7	OCFBR6	OCFBR5	OCFBR4	OCFBR3	OCFBR2	OCFBR1	OCFBR0	OCFAR7	OCFAR6	OCFAR5	OCFAR4	OCFAR3	OCFAR2	OCFAR1	OCFAR0
RPINR12	PCI9R7	PCI9R6	PCI9R5	PCI9R4	PCI9R3	PCI9R2	PCI9R1	PCI9R0	PCI8R7	PCI8R6	PCI8R5	PCI8R4	PCI8R3	PCI8R2	PCI8R1	PCI8R0
RPINR13	PCI11R7	PCI11R6	PCI11R5	PCI11R4	PCI11R3	PCI11R2	PCI11R1	PCI11R0	PCI10R7	PCI10R6	PCI10R5	PCI10R4	PCI10R3	PCI10R2	PCI10R1	PCI10R0
RPINR14	QEIB1R7	QEIB1R6	QEIB1R5	QEIB1R4	QEIB1R3	QEIB1R2	QEIB1R1	QEIB1R0	QEIA1R7	QEIA1R6	QEIA1R5	QEIA1R4	QEIA1R3	QEIA1R2	QEIA1R1	QEIA1R0
RPINR15	QEIHOM1R7	QEIHOM1R6	QEIHOM1R5	QEIHOM1R4	QEIHOM1R3	QEIHOM1R2	QEIHOM1R1	QEIHOM1R0	QEINDX1R7	QEINDX1R6	QEINDX1R5	QEINDX1R4	QEINDX1R3	QEINDX1R2	QEINDX1R1	QEINDX1R0
RPINR18	U1DSRR7	U1DSRR6	U1DSRR5	U1DSRR4	U1DSRR3	U1DSRR2	U1DSRR1	U1DSRR0	U1RXR7	U1RXR6	U1RXR5	U1RXR4	U1RXR3	U1RXR2	U1RXR1	U1RXR0
RPINR19	U2DSRR7	U2DSRR6	U2DSRR5	U2DSRR4	U2DSRR3	U2DSRR2	U2DSRR1	U2DSRR0	U2RXR7	U2RXR6	U2RXR5	U2RXR4	U2RXR3	U2RXR2	U2RXR1	U2RXR0
RPINR20	SCK1R7	SCK1R6	SCK1R5	SCK1R4	SCK1R3	SCK1R2	SCK1R1	SCK1R0	SDI1R7	SDI1R6	SDI1R5	SDI1R4	SDI1R3	SDI1R2	SDI1R1	SDI1R0
RPINR21	REFOIR7	REFOIR6	REFOIR5	REFOIR4	REFOIR3	REFOIR2	REFOIR1	REFOIR0	SS1R7	SS1R6	SS1R5	SS1R4	SS1R3	SS1R2	SS1R1	SS1R0
RPINR22	SCK2R7	SCK2R6	SCK2R5	SCK2R4	SCK2R3	SCK2R2	SCK2R1	SCK2R0	SDI2R7	SDI2R6	SDI2R5	SDI2R4	SDI2R3	SDI2R2	SDI2R1	SDI2R0
RPINR23	U1CTSR7	U1CTSR6	U1CTSR5	U1CTSR4	U1CTSR3	U1CTSR2	U1CTSR1	U1CTSR0	SS2R7	SS2R6	SS2R5	SS2R4	SS2R3	SS2R2	SS2R1	SS2R0
RPINR26	—	—	—	—	—	—	—	—	CAN1RXR7	CAN1RXR6	CAN1RXR5	CAN1RXR4	CAN1RXR3	CAN1RXR2	CAN1RXR1	CAN1RXR0
RPINR30	U2CTSR7	U2CTSR6	U2CTSR5	U2CTSR4	U2CTSR3	U2CTSR2	U2CTSR1	U2CTSR0	—	—	—	—	—	—	—	—
RPINR37	PCI17R7	PCI17R6	PCI17R5	PCI17R4	PCI17R3	PCI17R2	PCI17R1	PCI17R0	—	—	—	—	—	—	—	—
RPINR38	—	—	—	—	—	—	—	—	PCI18R7	PCI18R6	PCI18R5	PCI18R4	PCI18R3	PCI18R2	PCI18R1	PCI18R0
RPINR42	PCI13R7	PCI13R6	PCI13R5	PCI13R4	PCI13R3	PCI13R2	PCI13R1	PCI13R0	PCI12R7	PCI12R6	PCI12R5	PCI12R4	PCI12R3	PCI12R2	PCI12R1	PCI12R0
RPINR43	PCI15R7	PCI15R6	PCI15R5	PCI15R4	PCI15R3	PCI15R2	PCI15R1	PCI15R0	PCI14R7	PCI14R6	PCI14R5	PCI14R4	PCI14R3	PCI14R2	PCI14R1	PCI14R0
RPINR44	SENT1R7	SENT1R6	SENT1R5	SENT1R4	SENT1R3	SENT1R2	SENT1R1	SENT1R0	PCI16R7	PCI16R6	PCI16R5	PCI16R4	PCI16R3	PCI16R2	PCI16R1	PCI16R0
RPINR45	CLCINAR7	CLCINAR6	CLCINAR5	CLCINAR4	CLCINAR3	CLCINAR2	CLCINAR1	CLCINAR0	SENT2R7	SENT2R6	SENT2R5	SENT2R4	SENT2R3	SENT2R2	SENT2R1	SENT2R0
RPINR46	CLCINCR7	CLCINCR6	CLCINCR5	CLCINCR4	CLCINCR3	CLCINCR2	CLCINCR1	CLCINCR0	CLCINBR7	CLCINBR6	CLCINBR5	CLCINBR4	CLCINBR3	CLCINBR2	CLCINBR1	CLCINBR0
RPINR47	ADCTRGR7	ADCTRGR6	ADCTRGR5	ADCTRGR4	ADCTRGR3	ADCTRGR2	ADCTRGR1	ADCTRGR0	CLCINDR7	CLCINDR6	CLCINDR5	CLCINDR4	CLCINDR3	CLCINDR2	CLCINDR1	CLCINDR0

© 2017-2018 Microchip Technology Inc.

TABLE 3-40: MASTER PPS OUTPUT CONTROL REGISTERS

Register	Bit 15	Bit 14	Bit 13	Bit 12	Bit 11	Bit 10	Bit 9	Bit 8	Bit 7	Bit 6	Bit 5	Bit 4	Bit 3	Bit 2	Bit 1	Bit 0
RPOR0	—	—	RP33R5	RP33R4	RP33R3	RP33R2	RP33R1	RP33R0	—	—	RP32R5	RP32R4	RP32R3	RP32R2	RP32R1	RP32R0
RPOR1	—	—	RP35R5	RP35R4	RP35R3	RP35R2	RP35R1	RP35R0	—	—	RP34R5	RP34R4	RP34R3	RP34R2	RP34R1	RP34R0
RPOR2	—	—	RP37R5	RP37R4	RP37R3	RP37R2	RP37R1	RP37R0	—	—	RP36R5	RP36R4	RP36R3	RP36R2	RP36R1	RP36R0
RPOR3	—	—	RP39R5	RP39R4	RP39R3	RP39R2	RP39R1	RP39R0	—	—	RP38R5	RP38R4	RP38R3	RP38R2	RP38R1	RP38R0
RPOR4	—	—	RP41R5	RP41R4	RP41R3	RP41R2	RP41R1	RP41R0	—	—	RP40R5	RP40R4	RP40R3	RP40R2	RP40R1	RP40R0
RPOR5	—	—	RP43R5	RP43R4	RP43R3	RP43R2	RP43R1	RP43R0	—	—	RP42R5	RP42R4	RP42R3	RP42R2	RP42R1	RP42R0
RPOR6	—	—	RP45R5	RP45R4	RP45R3	RP45R2	RP45R1	RP45R0	—	—	RP44R5	RP44R4	RP44R3	RP44R2	RP44R1	RP44R0
RPOR7	—	—	RP47R5	RP47R4	RP47R3	RP47R2	RP47R1	RP47R0	—	—	RP46R5	RP46R4	RP46R3	RP46R2	RP46R1	RP46R0
RPOR8	—	—	RP49R5	RP49R4	RP49R3	RP49R2	RP49R1	RP49R0	—	—	RP48R5	RP48R4	RP48R3	RP48R2	RP48R1	RP48R0
RPOR9	—	—	RP51R5	RP51R4	RP51R3	RP51R2	RP51R1	RP51R0	—	—	RP50R5	RP50R4	RP50R3	RP50R2	RP50R1	RP50R0
RPOR10	—	—	RP53R5	RP53R4	RP53R3	RP53R2	RP53R1	RP53R0	—	—	RP52R5	RP52R4	RP52R3	RP52R2	RP52R1	RP52R0
RPOR11	—	—	RP55R5	RP55R4	RP55R3	RP55R2	RP55R1	RP55R0	—	—	RP54R5	RP54R4	RP54R3	RP54R2	RP54R1	RP54R0
RPOR12	—	—	RP57R5	RP57R4	RP57R3	RP57R2	RP57R1	RP57R0	—	—	RP56R5	RP56R4	RP56R3	RP56R2	RP56R1	RP56R0
RPOR13	—	—	RP59R5	RP59R4	RP59R3	RP59R2	RP59R1	RP59R0	—	—	RP58R5	RP58R4	RP58R3	RP58R2	RP58R1	RP58R0
RPOR14	—	—	RP61R5	RP61R4	RP61R3	RP61R2	RP61R1	RP61R0	—	—	RP60R5	RP60R4	RP60R3	RP60R2	RP60R1	RP60R0
RPOR15	—	—	RP63R5	RP63R4	RP63R3	RP63R2	RP63R1	RP63R0	—	—	RP62R5	RP62R4	RP62R3	RP62R2	RP62R1	RP62R0
RPOR16	—	—	RP65R5	RP65R4	RP65R3	RP65R2	RP65R1	RP65R0	—	—	RP64R5	RP64R4	RP64R3	RP64R2	RP64R1	RP64R0
RPOR17	—	—	RP67R5	RP67R4	RP67R3	RP67R2	RP67R1	RP67R0	—	—	RP66R5	RP66R4	RP66R3	RP66R2	RP66R1	RP66R0
RPOR18	—	—	RP69R5	RP69R4	RP69R3	RP69R2	RP69R1	RP69R0	—	—	RP68R5	RP68R4	RP68R3	RP68R2	RP68R1	RP68R0
RPOR19	—	—	RP71R5	RP71R4	RP71R3	RP71R2	RP71R1	RP71R0	—	—	RP70R5	RP70R4	RP70R3	RP70R2	RP70R1	RP70R0
RPOR20	—	—	RP177R5	RP177R4	RP177R3	RP177R2	RP177R1	RP177R0	—	—	RP176R5	RP176R4	RP176R3	RP176R2	RP176R1	RP176R0
RPOR21	—	—	RP179R5	RP179R4	RP179R3	RP179R2	RP179R1	RP179R0	—	—	RP178R5	RP178R4	RP178R3	RP178R2	RP178R1	RP178R0
RPOR22	—	—	RP181R5	RP181R4	RP181R3	RP181R2	RP181R1	RP181R0	—	—	RP180R5	RP180R4	RP180R3	RP180R2	RP180R1	RP180R0

© 2017-2018 Microchip Technology Inc.

3.7 Deadman Timer (DMT) (Master Only)

Note 1: This data sheet summarizes the features of the dsPIC33CH128MP508 family of devices. It is not intended to be a comprehensive reference source. To complement the information in this data sheet, refer to **"Deadman Timer (DMT)"** (DS70005155) in the *"dsPIC33/PIC24 Family Reference Manual"*, which is available from the Microchip web site (www.microchip.com).

2: The Slave core does not have any DMT module; only the Master has the DMT.

The primary function of the Deadman Timer (DMT) is to interrupt the processor in the event of a software malfunction. The DMT, which works on the system clock, is a free-running instruction fetch timer, which is clocked whenever an instruction fetch occurs, until a count match occurs. Instructions are not fetched when the processor is in Sleep mode.

DMT can be enabled in the Configuration fuse or by software in the DMTCON register by setting the ON bit. The DMT consists of a 32-bit counter with a time-out count match value, as specified by the two 16-bit Configuration Fuse registers: FDMTCNTL and FDMTCNTH.

A DMT is typically used in mission-critical and safety-critical applications, where any single failure of the software functionality and sequencing must be detected. Table 3-41 shows an overview of the DMT module.

TABLE 3-41: DMT MODULE OVERVIEW

	No. of DMT Modules	Identical (Modules)
Master Core	1	No
Slave Core	None	NA

Figure 3-22 shows a block diagram of the Deadman Timer module.

FIGURE 3-22: DEADMAN TIMER BLOCK DIAGRAM

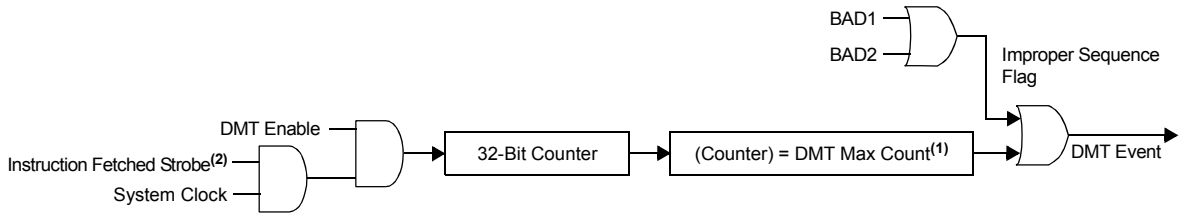

Note 1: DMT Max Count is controlled by the initial value of the FDMTCNTL and FDMTCNTH Configuration registers.

2: DMT window interval is controlled by the value of the FDMTIVTL and FDMTIVTH Configuration registers.

© 2017-2018 Microchip Technology Inc.

3.7.1 DEADMAN TIMER CONTROL REGISTERS

REGISTER 3-91: DMTCON: DEADMAN TIMER CONTROL REGISTER

R/W-0	U-0	U-0	U-0	U-0	U-0	U-0	U-0
ON(1)	—	—	—	—	—	—	—
bit 15							bit 8

U-0	U-0	U-0	U-0	U-0	U-0	U-0	U-0
—	—	—	—	—	—	—	—
bit 7							bit 0

Legend:			
R = Readable bit	W = Writable bit	U = Unimplemented bit, read as ‘0’	
-n = Value at POR	‘1’ = Bit is set	‘0’ = Bit is cleared	x = Bit is unknown

bit 15 **ON:** DMT Module Enable bit(1)
1 = Deadman Timer module is enabled
0 = Deadman Timer module is not enabled

bit 14-0 **Unimplemented:** Read as ‘0’

Note 1: This bit has control only when DMTDIS = 0 in the FDMT register.

REGISTER 3-92: DMTPRECLR: DEADMAN TIMER PRECLEAR REGISTER

R/W-0	R/W-0	R/W-0	R/W-0	R/W-0	R/W-0	R/W-0	R/W-0
STEP1<7:0>							
bit 15							bit 8

U-0	U-0	U-0	U-0	U-0	U-0	U-0	U-0
—	—	—	—	—	—	—	—
bit 7							bit 0

Legend:			
R = Readable bit	W = Writable bit	U = Unimplemented bit, read as ‘0’	
-n = Value at POR	‘1’ = Bit is set	‘0’ = Bit is cleared	x = Bit is unknown

bit 15-8 **STEP1<7:0>:** DMT Preclear Enable bits
01000000 = Enables the Deadman Timer preclear (Step 1)
All Other Write Patterns = Sets the BAD1 flag; these bits are cleared when a DMT Reset event occurs. STEP1<7:0> bits are also cleared if the STEP2<7:0> bits are loaded with the correct value in the correct sequence.

bit 7-0 **Unimplemented:** Read as ‘0’

REGISTER 3-93: DMTCLR: DEADMAN TIMER CLEAR REGISTER

U-0	U-0	U-0	U-0	U-0	U-0	U-0	U-0
—	—	—	—	—	—	—	—
bit 15							bit 8

R/W-0	R/W-0	R/W-0	R/W-0	R/W-0	R/W-0	R/W-0	R/W-0
STEP2<7:0>							
bit 7							bit 0

Legend:			
R = Readable bit	W = Writable bit	U = Unimplemented bit, read as ‘0’	
-n = Value at POR	‘1’ = Bit is set	‘0’ = Bit is cleared	x = Bit is unknown

bit 15-8 **Unimplemented:** Read as ‘0’

bit 7-0 **STEP2<7:0>:** DMT Clear Timer bits

00001000 = Clears STEP1<7:0>, STEP2<7:0> and the Deadman Timer if preceded by the correct loading of the STEP1<7:0> bits in the correct sequence. The write to these bits may be verified by reading the DMTCNTL/H register and observing the counter being reset.

All Other Write Patterns = Sets the BAD2 bit; the value of STEP1<7:0> will remain unchanged and the new value being written to STEP2<7:0> will be captured. These bits are cleared when a DMT Reset event occurs.

© 2017-2018 Microchip Technology Inc.

REGISTER 3-94: DMTSTAT: DEADMAN TIMER STATUS REGISTER

U-0	U-0	U-0	U-0	U-0	U-0	U-0	U-0
—	—	—	—	—	—	—	—
bit 15							bit 8

HC/R-0	HC/R-0	HC/R-0	U-0	U-0	U-0	U-0	R-0
BAD1	BAD2	DMTEVENT	—	—	—	—	WINOPN
bit 7							bit 0

Legend:	HC = Hardware Clearable bit		
R = Readable bit	W = Writable bit	U = Unimplemented bit, read as ‘0’	
-n = Value at POR	‘1’ = Bit is set	‘0’ = Bit is cleared	x = Bit is unknown

bit 15-8 **Unimplemented:** Read as ‘0’

bit 7 **BAD1:** Deadman Timer Bad STEP1<7:0> Value Detect bit
1 = Incorrect STEP1<7:0> value was detected
0 = Incorrect STEP1<7:0> value was not detected

bit 6 **BAD2:** Deadman Timer Bad STEP2<7:0> Value Detect bit
1 = Incorrect STEP2<7:0> value was detected
0 = Incorrect STEP2<7:0> value was not detected

bit 5 **DMTEVENT:** Deadman Timer Event bit
1 = Deadman Timer event was detected (counter expired, or bad STEP1<7:0> or STEP2<7:0> value was entered prior to counter increment)
0 = Deadman Timer event was not detected

bit 4-1 **Unimplemented:** Read as ‘0’

bit 0 **WINOPN:** Deadman Timer Clear Window bit
1 = Deadman Timer clear window is open
0 = Deadman Timer clear window is not open

REGISTER 3-95: DMTCNTL: DEADMAN TIMER COUNT REGISTER LOW

R/W-0	R/W-0	R/W-0	R/W-0	R/W-0	R/W-0	R/W-0	R/W-0
COUNTER<15:8>							
bit 15							bit 8

R/W-0	R/W-0	R/W-0	R/W-0	R/W-0	R/W-0	R/W-0	R/W-0
COUNTER<7:0>							
bit 7							bit 0

Legend:			
R = Readable bit	W = Writable bit	U = Unimplemented bit, read as ‘0’	
-n = Value at POR	‘1’ = Bit is set	‘0’ = Bit is cleared	x = Bit is unknown

bit 15-0 **COUNTER<15:0>:** Read Current Contents of Lower DMT Counter bits

REGISTER 3-96: DMTCNTH: DEADMAN TIMER COUNT REGISTER HIGH

R/W-0	R/W-0	R/W-0	R/W-0	R/W-0	R/W-0	R/W-0	R/W-0
COUNTER<31:24>							
bit 15							bit 8

R/W-0	R/W-0	R/W-0	R/W-0	R/W-0	R/W-0	R/W-0	R/W-0
COUNTER<23:16>							
bit 7							bit 0

Legend:			
R = Readable bit	W = Writable bit	U = Unimplemented bit, read as ‘0’	
-n = Value at POR	‘1’ = Bit is set	‘0’ = Bit is cleared	x = Bit is unknown

bit 15-0 **COUNTER<31:16>:** Read Current Contents of Higher DMT Counter bits

© 2017-2018 Microchip Technology Inc.

REGISTER 3-97: DMTPSCNTL: DMT POST-CONFIGURE COUNT STATUS REGISTER LOW

R/W-0	R/W-0	R/W-0	R/W-0	R/W-0	R/W-0	R/W-0	R/W-0
PSCNT<15:8>							
bit 15							bit 8

R/W-0	R/W-0	R/W-0	R/W-0	R/W-0	R/W-0	R/W-0	R/W-0
PSCNT<7:0>							
bit 7							bit 0

Legend:			
R = Readable bit	W = Writable bit	U = Unimplemented bit, read as ‘0’	
-n = Value at POR	‘1’ = Bit is set	‘0’ = Bit is cleared	x = Bit is unknown

bit 15-0 **PSCNT<15:0>:** Lower DMT Instruction Count Value Configuration Status bits
This is always the value of the FDMTCNTL Configuration register.

REGISTER 3-98: DMTPSCNTH: DMT POST-CONFIGURE COUNT STATUS REGISTER HIGH

R/W-0	R/W-0	R/W-0	R/W-0	R/W-0	R/W-0	R/W-0	R/W-0
PSCNT<31:24>							
bit 15							bit 8

R/W-0	R/W-0	R/W-0	R/W-0	R/W-0	R/W-0	R/W-0	R/W-0
PSCNT<23:16>							
bit 7							bit 0

Legend:			
R = Readable bit	W = Writable bit	U = Unimplemented bit, read as ‘0’	
-n = Value at POR	‘1’ = Bit is set	‘0’ = Bit is cleared	x = Bit is unknown

bit 15-0 **PSCNT<31:16>:** Higher DMT Instruction Count Value Configuration Status bits
This is always the value of the FDMTCNTH Configuration register.

REGISTER 3-99: DMTPSINTVL: DMT POST-CONFIGURE INTERVAL STATUS REGISTER LOW

R/W-0	R/W-0	R/W-0	R/W-0	R/W-0	R/W-0	R/W-0	R/W-0
PSINTV<15:8>							
bit 15							bit 8

R/W-0	R/W-0	R/W-0	R/W-0	R/W-0	R/W-0	R/W-0	R/W-0
PSINTV<7:0>							
bit 7							bit 0

Legend:			
R = Readable bit	W = Writable bit	U = Unimplemented bit, read as ‘0’	
-n = Value at POR	‘1’ = Bit is set	‘0’ = Bit is cleared	x = Bit is unknown

bit 15-0 **PSINTV<15:0>:** Lower DMT Window Interval Configuration Status bits
This is always the value of the FDMTIVTL Configuration register.

REGISTER 3-100: DMTPSINTVH: DMT POST-CONFIGURE INTERVAL STATUS REGISTER HIGH

R/W-0	R/W-0	R/W-0	R/W-0	R/W-0	R/W-0	R/W-0	R/W-0
PSINTV<31:24>							
bit 15							bit 8

R/W-0	R/W-0	R/W-0	R/W-0	R/W-0	R/W-0	R/W-0	R/W-0
PSINTV<23:16>							
bit 7							bit 0

Legend:			
R = Readable bit	W = Writable bit	U = Unimplemented bit, read as ‘0’	
-n = Value at POR	‘1’ = Bit is set	‘0’ = Bit is cleared	x = Bit is unknown

bit 15-0 **PSINTV<31:16>:** Higher DMT Window Interval Configuration Status bits
This is always the value of the FDMTIVTH Configuration register.

© 2017-2018 Microchip Technology Inc.

REGISTER 3-101: DMTHOLDREG: DMT HOLD REGISTER(1)

R/W-0	R/W-0	R/W-0	R/W-0	R/W-0	R/W-0	R/W-0	R/W-0
UPRCNT<15:8>							
bit 15							bit 8

R/W-0	R/W-0	R/W-0	R/W-0	R/W-0	R/W-0	R/W-0	R/W-0
UPRCNT<7:0>							
bit 7							bit 0

Legend:			
R = Readable bit	W = Writable bit	U = Unimplemented bit, read as ‘0’	
-n = Value at POR	‘1’ = Bit is set	‘0’ = Bit is cleared	x = Bit is unknown

bit 15-0 **UPRCNT<15:0>:** DMTCNTH Register Value when DMTCNTL and DMTCNTH were Last Read bits

Note 1: The DMTHOLDREG register is initialized to ‘0’ on Reset, and is only loaded when the DMTCNTL and DMTCNTH registers are read.

3.8 Controller Area Network (CAN FD) Module (Master Only)

Note 1: This data sheet summarizes the features of the dsPIC33CH128MP508 family of devices. It is not intended to be a comprehensive reference source. To complement the information in this data sheet, refer to **"CAN Flexible Data-Rate (FD) Protocol Module"** (DS70005340 in the *"dsPIC33/PIC24 Family Reference Manual"*, which is available from the Microchip web site (www.microchip.com).

2: Only the Master core has a CAN FD module.

Table 3-42 shows an overview of the CAN FD module.

TABLE 3-42: CAN FD MODULE OVERVIEW

	Number of CAN Modules	Identical (Modules)
Master Core	1	NA
Slave Core	None	NA

3.8.1 FEATURES

The CAN FD module has the following features:

General

- Nominal (Arbitration) Bit Rate up to 1 Mbps
- Data Bit Rate up to 8 Mbps
- CAN FD Controller modes:
  - Mixed CAN 2.0B and CAN FD mode
  - CAN 2.0B mode
- Conforms to ISO11898-1:2015

Message FIFOs

- Seven FIFOs, Configurable as Transmit or Receive FIFOs
- One Transmit Queue (TXQ)
- Transmit Event FIFO (TEF) with 32-Bit Timestamp

Message Transmission

- Message Transmission Prioritization:
  - Based on priority bit field, and/or
  - Message with lowest ID gets transmitted first using the TXQ
- Programmable Automatic Retransmission Attempts: Unlimited, Three Attempts or Disabled

Message Reception

- 16 Flexible Filter and Mask Objects.
- Each Object can be Configured to Filter either:
  - Standard ID + first 18 data bits or
  - Extended ID
- 32-Bit Timestamp.
- The CAN FD Bit Stream Processor (BSP) Implements the Medium Access Control of the CAN FD Protocol Described in ISO11898-1:2015. It serializes and deserializes the bit stream, encodes and decodes the CAN FD frames, manages the medium access, Acknowledges frames, and detects and signals errors.
- The TX Handler Prioritizes the Messages that are Requested for Transmission by the Transmit FIFOs. It uses the RAM interface to fetch the transmit data from RAM and provides it to the BSP for transmission.
- The BSP provides Received Messages to the RX Handler. The RX handler uses acceptance filters to filter out messages that shall be stored in the Receive FIFOs. It uses the RAM interface to store received data into RAM.
- Each FIFO can be Configured either as a Transmit or Receive FIFO. The FIFO control keeps track of the FIFO head and tail, and calculates the user address. In a TX FIFO, the user address points to the address in RAM where the data for the next transmit message shall be stored. In an RX FIFO, the user address points to the address in RAM where the data of the next receive message shall be read. The user notifies the FIFO that a message was written to or read from RAM by incrementing the head/tail of the FIFO.
- The Transmit Queue (TXQ) is a Special Transmit FIFO that Transmits the Messages based on the ID of the Messages Stored in the Queue.
- The Transmit Event FIFO (TEF) Stores the Message IDs of the Transmitted Messages.
- A Free-Running Time Base Counter is used to Timestamp Received Messages. Messages in the TEF can also be timestamped.
- The CAN FD Controller module Generates Interrupts when New Messages are Received or when Messages were Transmitted Successfully.

Figure 3-23 shows the CAN FD system block diagram.

© 2017-2018 Microchip Technology Inc.

FIGURE 3-23: CAN FD MODULE BLOCK DIAGRAM

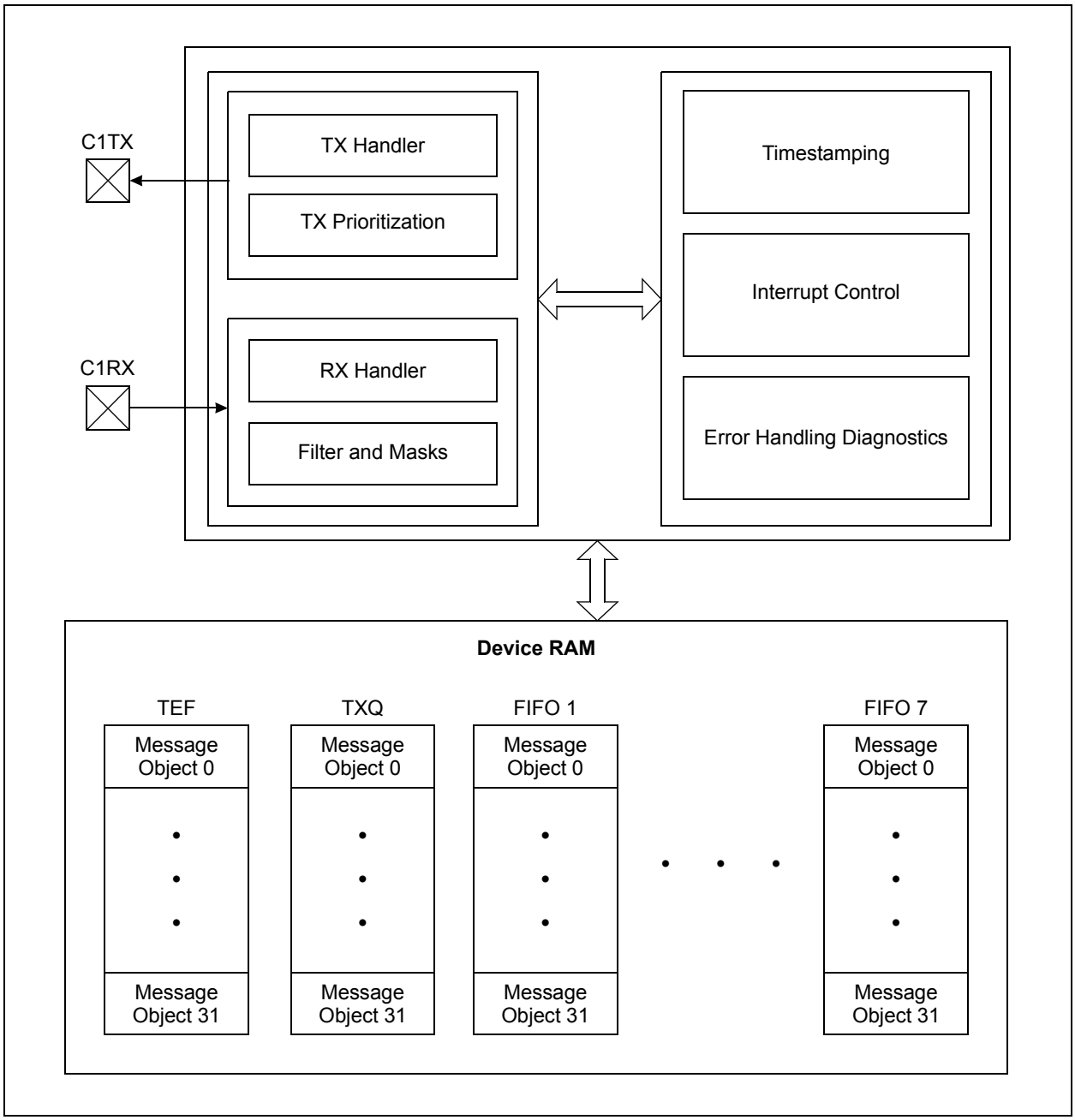

3.8.2 CAN CONTROL/STATUS REGISTERS

REGISTER 3-102: C1CONH: CAN CONTROL REGISTER HIGH

R/W-0	R/W-0	R/W-0	R/W-0	S/HC-0	R/W-1	R/W-0	R/W-0
TXBWS3	TXBWS2	TXBWS1	TXBWS0	ABAT	REQOP2	REQOP1	REQOP0
bit 15							bit 8

R-1	R-0	R-0	R/W-1	R/W-1	R/W-0	R/W-0	R/W-0
OPMOD2	OPMOD1	OPMOD0	TXQEN(1)	STEF(1)	SERRLOM(1)	ESIGM(1)	RTXAT(1)
bit 7							bit 0

Legend:	S = Settable bit	HC = Hardware Clearable bit	
R = Readable bit	W = Writable bit	U = Unimplemented bit, read as ‘0’	
-n = Value at POR	‘1’ = Bit is set	‘0’ = Bit is cleared	x = Bit is unknown

bit 15-12 **TXBWS<3:0>:** Transmit Bandwidth Sharing bits
`1111-1100` = 4096
`1011` = 2048
`1010` = 1024
`1001` = 512
`1000` = 256
`0111` = 128
`0110` = 64
`0101` = 32
`0100` = 16
`0011` = 8
`0010` = 4
`0001` = 2
`0000` = No delay

bit 11 **ABAT:** Abort All Pending Transmissions bit
`1` = Signals all transmit buffers to abort transmission
`0` = Module will clear this bit when all transmissions are aborted

bit 10-8 **REQOP<2:0>:** Request Operation Mode bits
`111` = Sets Restricted Operation mode
`110` = Sets Normal CAN 2.0 mode; error frames on CAN FD frames
`101` = Sets External Loopback mode
`100` = Sets Configuration mode
`011` = Sets Listen Only mode
`010` = Sets Internal Loopback mode
`001` = Sets Disable mode
`000` = Sets Normal CAN FD mode; supports mixing of full CAN FD and classic CAN 2.0 frames

bit 7-5 **OPMOD<2:0>:** Operation Mode Status bits
`111` = Module is in Restricted Operation mode
`110` = Module is in Normal CAN 2.0 mode; error frames on CAN FD frames
`101` = Module is in External Loopback mode
`100` = Module is in Configuration mode
`011` = Module is in Listen Only mode
`010` = Module is in Internal Loopback mode
`001` = Module is in Disable mode
`000` = Module is in Normal CAN FD mode; supports mixing of full CAN FD and classic CAN 2.0 frames

Note 1: These bits can only be modified in Configuration mode (OPMOD<2:0> = `100`).

© 2017-2018 Microchip Technology Inc.

REGISTER 3-102: C1CONH: CAN CONTROL REGISTER HIGH (CONTINUED)

bit 4 **TXQEN:** Enable Transmit Queue bit(1)
1 = Enables Transmit Message Queue (TXQ) and reserves space in RAM
0 = Does not reserve space in RAM for TXQ

bit 3 **STEF:** Store in Transmit Event FIFO bit(1)
1 = Saves transmitted messages in TEF
0 = Does not save transmitted messages in TEF

bit 2 **SERRLOM:** Transition to Listen Only Mode on System Error bit(1)
1 = Transitions to Listen Only mode
0 = Transitions to Restricted Operation mode

bit 1 **ESIGM:** Transmit ESI in Gateway Mode bit(1)
1 = ESI is transmitted as recessive when ESI of the message is high or CAN controller is error passive
0 = ESI reflects error status of CAN controller

bit 0 **RTXAT:** Restrict Retransmission Attempts bit(1)
1 = Restricted retransmission attempts, uses TXAT<1:0> bits (C1TXQCONH<6:5>)
0 = Unlimited number of retransmission attempts, TXAT<1:0> bits will be ignored

Note 1: These bits can only be modified in Configuration mode (OPMOD<2:0> = 100).

REGISTER 3-103: C1CONL: CAN CONTROL REGISTER LOW

R/W-0	U-0	R/W-0	R/W-0	R/W-0	R/W-1	R/W-1	R/W-1
CON	—	SIDL	BRSDIS	BUSY	WFT1	WFT0	WAKFIL[1]
bit 15							bit 8

R/W-0	R/W-1	R/W-1	R/W-0	R/W-0	R/W-0	R/W-0	R/W-0
CLKSEL[1]	PXEDIS[1]	ISOCRCEN[1]	DNCNT4	DNCNT3	DNCNT2	DNCNT1	DNCNT0
bit 7							bit 0

Legend:			
R = Readable bit	W = Writable bit	U = Unimplemented bit, read as ‘0’	
-n = Value at POR	‘1’ = Bit is set	‘0’ = Bit is cleared	x = Bit is unknown

bit 15 **CON:** CAN Enable bit
1 = CAN module is enabled
0 = CAN module is disabled

bit 14 **Unimplemented:** Read as ‘0’

bit 13 **SIDL:** CAN Stop in Idle Control bit
1 = Stops module operation in Idle mode
0 = Does not stop module operation in Idle mode

bit 12 **BRSDIS:** Bit Rate Switching (BRS) Disable bit
1 = Bit Rate Switching is disabled, regardless of BRS in the transmit message object
0 = Bit Rate Switching depends on BRS in the transmit message object

bit 11 **BUSY:** CAN Module is Busy bit
1 = The CAN module is active
0 = The CAN module is inactive

bit 10-9 **WFT<1:0>:** Selectable Wake-up Filter Time bits
11 = $T11_{FILTER}$
10 = $T10_{FILTER}$
01 = $T01_{FILTER}$
00 = $T00_{FILTER}$

bit 8 **WAKFIL:** Enable CAN Bus Line Wake-up Filter bit[1]
1 = Uses CAN bus line filter for wake-up
0 = CAN bus line filter is not used for wake-up

bit 7 **CLKSEL:** Module Clock Source Select bit[1]
1 = AF_{PLLO} is selected as the source
0 = F_{CAN} is selected as the source

bit 6 **PXEDIS:** Protocol Exception Event Detection Disabled bit[1]
A recessive “reserved bit” following a recessive FDF bit is called a Protocol Exception.
1 = Protocol Exception is treated as a form error
0 = If a Protocol Exception is detected, CAN will enter the bus integrating state

bit 5 **ISOCRCEN:** Enable ISO CRC in CAN FD Frames bit[1]
1 = Includes stuff bit count in CRC field and uses non-zero CRC initialization vector
0 = Does not include stuff bit count in CRC field and uses CRC initialization vector with all zeros

bit 4-0 **DNCNT<4:0>:** DeviceNet™ Filter Bit Number bits
10011-11111 = Invalid selection (compares up to 18 bits of data with EID)
10010 = Compares up to Data Byte 2, bit 6 with EID17
...
00001 = Compares up to Data Byte 0, bit 7 with EID0
00000 = Does not compare data bytes

Note 1: These bits can only be modified in Configuration mode (OPMOD<2:0> = 100).

© 2017-2018 Microchip Technology Inc.

REGISTER 3-104: C1NBTCFGH: CAN NOMINAL BIT TIME CONFIGURATION REGISTER HIGH(1)

R/W-0	R/W-0	R/W-0	R/W-0	R/W-0	R/W-0	R/W-0	R/W-0
BRP<7:0>							
bit 15							bit 8

R/W-0	R/W-0	R/W-1	R/W-1	R/W-1	R/W-1	R/W-0	R/W-0
TSEG1<7:0>							
bit 7							bit 0

Legend:			
R = Readable bit	W = Writable bit	U = Unimplemented bit, read as ‘0’	
-n = Value at POR	‘1’ = Bit is set	‘0’ = Bit is cleared	x = Bit is unknown

bit 15-8 **BRP<7:0>:** Baud Rate Prescaler bits
`1111 1111` = TQ = 256/FSYS
`...`
`0000 0000` = TQ = 1/FSYS

bit 7-0 **TSEG1<7:0>:** Time Segment 1 bits (Propagation Segment + Phase Segment 1)
`1111 1111` = Length is 256 x TQ
`...`
`0000 0000` = Length is 1 x TQ

Note 1: These bits can only be modified in Configuration mode (OPMOD<2:0> = `100`).

REGISTER 3-105: C1NBTCFGL: CAN NOMINAL BIT TIME CONFIGURATION REGISTER LOW(1)

U-0	R/W-0	R/W-0	R/W-0	R/W-1	R/W-1	R/W-1	R/W-1
—	TSEG2<6:0>						
bit 15							bit 8

U-0	R/W-0	R/W-0	R/W-0	R/W-1	R/W-1	R/W-1	R/W-1
—	SJW<6:0>						
bit 7							bit 0

Legend:			
R = Readable bit	W = Writable bit	U = Unimplemented bit, read as ‘0’	
-n = Value at POR	‘1’ = Bit is set	‘0’ = Bit is cleared	x = Bit is unknown

bit 15 **Unimplemented:** Read as ‘`0`’

bit 14-8 **TSEG2<6:0>:** Time Segment 2 bits (Phase Segment 2)
`111 1111` = Length is 128 x TQ
`...`
`000 0000` = Length is 1 x TQ

bit 7 **Unimplemented:** Read as ‘`0`’

bit 6-0 **SJW<6:0>:** Synchronization Jump Width bits
`111 1111` = Length is 128 x TQ
`...`
`000 0000` = Length is 1 x TQ

Note 1: These bits can only be modified in Configuration mode (OPMOD<2:0> = `100`).

REGISTER 3-106: C1DBTCFGH: CAN DATA BIT TIME CONFIGURATION REGISTER HIGH(1)

R/W-0	R/W-0	R/W-0	R/W-0	R/W-0	R/W-0	R/W-0	R/W-0
BRP<7:0>							
bit 15							bit 8

U-0	U-0	U-0	R/W-0	R/W-1	R/W-1	R/W-1	R/W-0
—	—	—	TSEG1<4:0>				
bit 7							bit 0

Legend:			
R = Readable bit	W = Writable bit	U = Unimplemented bit, read as ‘0’	
-n = Value at POR	‘1’ = Bit is set	‘0’ = Bit is cleared	x = Bit is unknown

bit 15-8 **BRP<7:0>:** Baud Rate Prescaler bits
`1111 1111` = $T_Q = 256/F_{SYS}$
`...`
`0000 0000` = $T_Q = 1/F_{SYS}$

bit 7-5 **Unimplemented:** Read as ‘`0`’

bit 4-0 **TSEG1<4:0>:** Time Segment 1 bits (Propagation Segment + Phase Segment 1)
`1 1111` = Length is 32 x T_Q
`...`
`0 0000` = Length is 1 x T_Q

Note 1: This register can only be modified in Configuration mode (OPMOD<2:0> = `100`).

REGISTER 3-107: C1DBTCFGL: CAN DATA BIT TIME CONFIGURATION REGISTER LOW(1)

U-0	U-0	U-0	U-0	R/W-0	R/W-0	R/W-1	R/W-1
—	—	—	—	TSEG2<3:0>			
bit 15							bit 8

U-0	U-0	U-0	U-0	R/W-0	R/W-0	R/W-1	R/W-1
—	—	—	—	SJW<3:0>			
bit 7							bit 0

Legend:			
R = Readable bit	W = Writable bit	U = Unimplemented bit, read as ‘0’	
-n = Value at POR	‘1’ = Bit is set	‘0’ = Bit is cleared	x = Bit is unknown

bit 15-12 **Unimplemented:** Read as ‘`0`’

bit 11-8 **TSEG2<3:0>:** Time Segment 2 bits (Phase Segment 2)
`1111` = Length is 16 x T_Q
`...`
`0000` = Length is 1 x T_Q

bit 7-4 **Unimplemented:** Read as ‘`0`’

bit 3-0 **SJW<3:0>:** Synchronization Jump Width bits
`1111` = Length is 16 x T_Q
`...`
`0000` = Length is 1 x T_Q

Note 1: This register can only be modified in Configuration mode (OPMOD<2:0> = `100`).

© 2017-2018 Microchip Technology Inc.

REGISTER 3-108: C1TDCH: CAN TRANSMITTER DELAY COMPENSATION REGISTER HIGH(1)

U-0	U-0	U-0	U-0	U-0	U-0	R/W-0	R/W-0
—	—	—	—	—	—	EDGFLTEN	SID11EN
bit 15							bit 8

U-0	U-0	U-0	U-0	U-0	U-0	R/W-1	R/W-0
—	—	—	—	—	—	TDCMOD1	TDCMOD0
bit 7							bit 0

Legend:			
R = Readable bit	W = Writable bit	U = Unimplemented bit, read as ‘0’	
-n = Value at POR	‘1’ = Bit is set	‘0’ = Bit is cleared	x = Bit is unknown

bit 15-10 **Unimplemented:** Read as ‘0’

bit 9 **EDGFLTEN:** Enable Edge Filtering During Bus Integration State bit
1 = Edge filtering is enabled according to ISO11898-1:2015
0 = Edge filtering is disabled

bit 8 **SID11EN:** Enable 12-Bit SID in CAN FD Base Format Messages bit
1 = RRS is used as SID11 in CAN FD base format messages: SID<11:0> = {SID<10:0>, SID11}
0 = Does not use RRS; SID<10:0>

bit 7-2 **Unimplemented:** Read as ‘0’

bit 1-0 **TDCMOD<1:0>:** Transmitter Delay Compensation Mode bits (Secondary Sample Point (SSP))
10-11 = Auto: Measures delay and adds TSEG1<4:0> (C1DBTCFGH<4:0>), adds TDCO<6:0>
01 = Manual: Does not measure, uses TDCV<5:0> + TDCO<6:0> from register
00 = Disable

Note 1: This register can only be modified in Configuration mode (OPMOD<2:0> = 100).

REGISTER 3-109: C1TDCL: CAN TRANSMITTER DELAY COMPENSATION REGISTER LOW(1)

U-0	R/W-0	R/W-0	R/W-1	R/W-0	R/W-0	R/W-0	R/W-0
—	TDCO<6:0>						
bit 15							bit 8

U-0	U-0	R/W-0	R/W-0	R/W-0	R/W-0	R/W-0	R/W-0
—	—	TDCV<5:0>					
bit 7							bit 0

Legend:			
R = Readable bit	W = Writable bit	U = Unimplemented bit, read as ‘0’	
-n = Value at POR	‘1’ = Bit is set	‘0’ = Bit is cleared	x = Bit is unknown

bit 15 **Unimplemented:** Read as ‘0’

bit 14-8 **TDCO<6:0>:** Transmitter Delay Compensation Offset bits (Secondary Sample Point (SSP))

`111 1111` = -64 x TSYS

...

`011 1111` = 63 x TSYS

...

`000 0000` = 0 x TSYS

bit 7-6 **Unimplemented:** Read as ‘0’

bit 5-0 **TDCV<5:0>:** Transmitter Delay Compensation Value bits (Secondary Sample Point (SSP))

`11 1111` = FP

...

`00 0000` = 0 x FP

Note 1: This register can only be modified in Configuration mode (OPMOD<2:0> = `100`).

© 2017-2018 Microchip Technology Inc.

REGISTER 3-110: C1TBCH: CAN TIME BASE COUNTER REGISTER HIGH(1,2)

R/W-0	R/W-0	R/W-0	R/W-0	R/W-0	R/W-0	R/W-0	R/W-0
TBC<31:24>							
bit 15							bit 8

R/W-0	R/W-0	R/W-0	R/W-0	R/W-0	R/W-0	R/W-0	R/W-0
TBC<23:16>							
bit 7							bit 0

Legend:			
R = Readable bit	W = Writable bit	U = Unimplemented bit, read as ‘0’	
-n = Value at POR	‘1’ = Bit is set	‘0’ = Bit is cleared	x = Bit is unknown

bit 15-0 **TBC<31:16>** CAN Time Base Counter bits
This is a free-running timer that increments every TBCPREx clock when TBCEN is set.

Note 1: The Time Base Counter (TBC) will be stopped and reset when TBCEN = 0 to save power.
2: The TBC prescaler count will be reset on any write to C1TBCH/L (TBCPREx will be unaffected).

REGISTER 3-111: C1TBCL: CAN TIME BASE COUNTER REGISTER LOW(1,2)

R/W-0	R/W-0	R/W-0	R/W-0	R/W-0	R/W-0	R/W-0	R/W-0
TBC<15:8>							
bit 15							bit 8

R/W-0	R/W-0	R/W-0	R/W-0	R/W-0	R/W-0	R/W-0	R/W-0
TBC<7:0>							
bit 7							bit 0

Legend:			
R = Readable bit	W = Writable bit	U = Unimplemented bit, read as ‘0’	
-n = Value at POR	‘1’ = Bit is set	‘0’ = Bit is cleared	x = Bit is unknown

bit 15-0 **TBC<15:0>** CAN Time Base Counter bits
This is a free-running timer that increments every TBCPREx clock when TBCEN is set.

Note 1: The TBC will be stopped and reset when TBCEN = 0 to save power.
2: The TBC prescaler count will be reset on any write to C1TBCH/L (TBCPREx will be unaffected).

REGISTER 3-112: C1TSCONH: CAN TIMESTAMP CONTROL REGISTER HIGH

U-0	U-0	U-0	U-0	U-0	U-0	U-0	U-0
—	—	—	—	—	—	—	—
bit 15							bit 8

U-0	U-0	U-0	U-0	U-0	R/W-0	R/W-0	R/W-0
—	—	—	—	—	TSRES	TSEOF	TBCEN
bit 7							bit 0

Legend:			
R = Readable bit	W = Writable bit	U = Unimplemented bit, read as ‘0’	
-n = Value at POR	‘1’ = Bit is set	‘0’ = Bit is cleared	x = Bit is unknown

bit 15-3 **Unimplemented:** Read as ‘0’

bit 2 **TSRES:** Timestamp Reset bit (CAN FD frames only)
1 = At sample point of the bit following the FDF bit
0 = At sample point of Start-of-Frame (SOF)

bit 1 **TSEOF:** Timestamp End-of-Frame (EOF) bit
1 = Timestamp when frame is taken valid (11898-1 10.7):
- RX no error until last, but one bit of EOF
- TX no error until the end of EOF

0 = Timestamp at “beginning” of frame:
- Classical Frame: At sample point of SOF
- FD Frame: see TSRES bit

bit 0 **TBCEN:** Time Base Counter Enable bit
1 = Enables TBC
0 = Stops and resets TBC

REGISTER 3-113: C1TSCONL: CAN TIMESTAMP CONTROL REGISTER LOW

U-0	U-0	U-0	U-0	U-0	U-0	R/W-0	R/W-0
—	—	—	—	—	—	TBCPRE<9:8>	
bit 15							bit 8

R/W-0	R/W-0	R/W-0	R/W-0	R/W-0	R/W-0	R/W-0	R/W-0
TBCPRE<7:0>							
bit 7							bit 0

Legend:			
R = Readable bit	W = Writable bit	U = Unimplemented bit, read as ‘0’	
-n = Value at POR	‘1’ = Bit is set	‘0’ = Bit is cleared	x = Bit is unknown

bit 15-10 **Unimplemented:** Read as ‘0’

bit 9-0 **TBCPRE<9:0>:** CAN Time Base Counter Prescaler bits
1023 = TBC increments every 1024 clocks
...
0 = TBC increments every 1 clock

© 2017-2018 Microchip Technology Inc.

REGISTER 3-114: C1VECH: CAN INTERRUPT CODE REGISTER HIGH

U-0	R-1	R-0	R-0	R-0	R-0	R-0	R-0
—	RXCODE<6:0>						
bit 15							bit 8

U-0	R-1	R-0	R-0	R-0	R-0	R-0	R-0
—	TXCODE<6:0>						
bit 7							bit 0

Legend:			
R = Readable bit	W = Writable bit	U = Unimplemented bit, read as ‘0’	
-n = Value at POR	‘1’ = Bit is set	‘0’ = Bit is cleared	x = Bit is unknown

bit 15 **Unimplemented:** Read as ‘0’

bit 14-8 **RXCODE<6:0>:** Receive Interrupt Flag Code bits
1000001-1111111 = Reserved
1000000 = No interrupt
0001000-0111111 = Reserved
0000111 = FIFO 7 interrupt (RFIF7 is set)
...
0000010 = FIFO 2 interrupt (RFIF2 is set)
0000001 = FIFO 1 interrupt (RFIF1 is set)
0000000 = Reserved; FIFO 0 cannot receive

bit 7 **Unimplemented:** Read as ‘0’

bit 6-0 **TXCODE<6:0>:** Transmit Interrupt Flag Code bits
1000001-1111111 = Reserved
1000000 = No interrupt
0001000-0111111 = Reserved
0000111 = FIFO 7 interrupt (TFIF7 is set)
...
0000001 = FIFO 1 interrupt (TFIF1 is set)
0000000 = FIFO 0 interrupt (TFIF0 is set)

REGISTER 3-115: C1VECL: CAN INTERRUPT CODE REGISTER LOW

U-0	U-0	U-0	R-0	R-0	R-0	R-0	R-0
—	—	—	FILHIT<4:0>				
bit 15							bit 8

U-0	R-1	R-0	R-0	R-0	R-0	R-0	R-0
—	ICODE<6:0>						
bit 7							bit 0

Legend:			
R = Readable bit	W = Writable bit	U = Unimplemented bit, read as ‘0’	
-n = Value at POR	‘1’ = Bit is set	‘0’ = Bit is cleared	x = Bit is unknown

bit 15-13 **Unimplemented:** Read as ‘0’

bit 12-8 **FILHIT<4:0>:** Filter Hit Number bits
01111 = Filter 15
01110 = Filter 14
...
00001 = Filter 1
00000 = Filter 0

bit 7 **Unimplemented:** Read as ‘0’

bit 6-0 **ICODE<6:0>:** Interrupt Flag Code bits
1001011-1111111 = Reserved
1001010 = Transmit attempt interrupt (any bit in C1TXATIF is set)
1001001 = Transmit event FIFO interrupt (any bit in C1TEFSTA is set)
1001000 = Invalid message occurred (IVMIF/IE)
1000111 = CAN module mode change occurred (MODIF/IE)
1000110 = CAN timer overflow (TBCIF/IE)
1000101 = RX/TX MAB overflow/underflow (RX: Message received before previous message was saved to memory; TX: Can’t feed TX MAB fast enough to transmit consistent data)
1000100 = Address error interrupt (illegal FIFO address presented to system)
1000011 = Receive FIFO overflow interrupt (any bit in C1RXOVIF is set)
1000010 = Wake-up interrupt (WAKIF/WAKIE)
1000001 = Error interrupt (CERRIF/IE)
1000000 = No interrupt
0001000-0111111 = Reserved
0000111 = FIFO 7 interrupt (TFIF7 or RFIF7 is set)
...
0000001 = FIFO 1 interrupt (TFIF1 or RFIF1 is set)
0000000 = FIFO 0 interrupt (TFIF0 is set)

© 2017-2018 Microchip Technology Inc.

REGISTER 3-116: C1INTH: CAN INTERRUPT REGISTER HIGH

R/W-0	R/W-0	R/W-0	R/W-0	R/W-0	R/W-0	U-0	U-0
IVMIE	WAKIE	CERRIE	SERRIE	RXOVIE	TXATIE	—	—
bit 15							bit 8

U-0	U-0	U-0	R/W-0	R/W-0	R/W-0	R/W-0	R/W-0
—	—	—	TEFIE	MODIE	TBCIE	RXIE	TXIE
bit 7							bit 0

Legend:			
R = Readable bit	W = Writable bit	U = Unimplemented bit, read as ‘0’	
-n = Value at POR	‘1’ = Bit is set	‘0’ = Bit is cleared	x = Bit is unknown

bit 15 **IVMIE:** Invalid Message Interrupt Enable bit
1 = Invalid message interrupt is enabled
0 = Invalid message interrupt is disabled

bit 14 **WAKIE:** Bus Wake-up Activity Interrupt Enable bit
1 = Wake-up activity interrupt is enabled
0 = Wake-up Activity Interrupt is disabled

bit 13 **CERRIE:** CAN Bus Error Interrupt Enable bit
1 = CAN bus error interrupt is enabled
0 = CAN bus error interrupt is disabled

bit 12 **SERRIE:** System Error Interrupt Enable bit
1 = System error interrupt is enabled
0 = System error interrupt is disabled

bit 11 **RXOVIE:** Receive Buffer Overflow Interrupt Enable bit
1 = Receive buffer overflow interrupt is enabled
0 = Receive buffer overflow interrupt is disabled

bit 10 **TXATIE:** Transmit Attempt Interrupt Enable bit
1 = Transmit attempt interrupt is enabled
0 = Transmit attempt interrupt is disabled

bit 9-5 **Unimplemented:** Read as ‘0’

bit 4 **TEFIE:** Transmit Event FIFO Interrupt Enable bit
1 = Transmit event FIFO interrupt is enabled
0 = Transmit event FIFO interrupt is disabled

bit 3 **MODIE:** Mode Change Interrupt Enable bit
1 = Mode change interrupt is enabled
0 = Mode change interrupt is disabled

bit 2 **TBCIE:** CAN Timer Interrupt Enable bit
1 = CAN timer interrupt is enabled
0 = CAN timer interrupt is disabled

bit 1 **RXIE:** Receive Object Interrupt Enable bit
1 = Receive object interrupt is enabled
0 = Receive object interrupt is disabled

bit 0 **TXIE:** Transmit Object Interrupt Enable bit
1 = Transmit object interrupt is enabled
0 = Transmit object interrupt is disabled

REGISTER 3-117: C1INTL: CAN INTERRUPT REGISTER LOW

HS/C-0	HS/C-0	HS/C-0	HS/C-0	R-0	R-0	U-0	U-0
IVMIF(1)	WAKIF(1)	CERRIF(1)	SERRIF(1)	RXOVIF	TXATIF	—	—
bit 15							bit 8

U-0	U-0	U-0	R-0	HS/C-0	HS/C-0	R-0	R-0
—	—	—	TEFIF	MODIF(1)	TBCIF(1)	RXIF	TXIF
bit 7							bit 0

Legend:	C = Clearable bit	HS = Hardware Settable bit	
R = Readable bit	W = Writable bit	U = Unimplemented bit, read as ‘0’	
-n = Value at POR	‘1’ = Bit is set	‘0’ = Bit is cleared	x = Bit is unknown

bit 15 **IVMIF:** Invalid Message Interrupt Flag bit(1)
1 = Invalid message interrupt occurred
0 = No invalid message interrupt

bit 14 **WAKIF:** Bus Wake-up Activity Interrupt Flag bit(1)
1 = Wake-up activity interrupt occurred
0 = No wake-up activity interrupt

bit 13 **CERRIF:** CAN Bus Error Interrupt Flag bit(1)
1 = CAN bus error interrupt occurred
0 = No CAN bus error interrupt

bit 12 **SERRIF:** System Error Interrupt Flag bit(1)
1 = System error interrupt occurred
0 = No system error interrupt

bit 11 **RXOVIF:** Receive Buffer Overflow Interrupt Flag bit
1 = Receive buffer overflow interrupt occurred
0 = No receive buffer overflow interrupt

bit 10 **TXATIF:** Transmit Attempt Interrupt Flag bit
1 = Transmit attempt interrupt occurred
0 = No Transmit Attempt Interrupt

bit 9-5 **Unimplemented:** Read as ‘0’

bit 4 **TEFIF:** Transmit Event FIFO Interrupt Flag bit
1 = Transmit event FIFO interrupt occurred
0 = No transmit event FIFO interrupt

bit 3 **MODIF:** CAN Mode Change Interrupt Flag bit(1)
1 = CAN module mode change occurred (OPMOD<2:0> have changed to reflect REQOP<2:0>)
0 = No mode change occurred

bit 2 **TBCIF:** CAN Timer Overflow Interrupt Flag bit(1)
1 = TBC has overflowed
0 = TBC has not overflowed

bit 1 **RXIF:** Receive Object Interrupt Flag bit
1 = Receive object interrupt is pending
0 = No receive object interrupts are pending

bit 0 **TXIF:** Transmit Object Interrupt Flag bit
1 = Transmit object interrupt is pending
0 = No transmit object interrupts are pending

Note 1: C1INTL: Flags are set by hardware and cleared by application.

© 2017-2018 Microchip Technology Inc.

REGISTER 3-118: C1RXIFH: CAN RECEIVE INTERRUPT STATUS REGISTER HIGH(1)

R-0	R-0	R-0	R-0	R-0	R-0	R-0	R-0
RFIF<31:24>							
bit 15							bit 8

R-0	R-0	R-0	R-0	R-0	R-0	R-0	R-0
RFIF<23:16>							
bit 7							bit 0

Legend:			
R = Readable bit	W = Writable bit	U = Unimplemented bit, read as ‘0’	
-n = Value at POR	‘1’ = Bit is set	‘0’ = Bit is cleared	x = Bit is unknown

bit 15-0 **RFIF<31:16>:** Unimplemented

Note 1: C1RXIFH: FIFO: RFIFx = ‘or’ of enabled RX FIFO flags (flags need to be cleared in the FIFO register).

REGISTER 3-119: C1RXIFL: CAN RECEIVE INTERRUPT STATUS REGISTER LOW(1)

R-0	R-0	R-0	R-0	R-0	R-0	R-0	R-0
RFIF<15:8>							
bit 15							bit 8

R-0	R-0	R-0	R-0	R-0	R-0	R-0	U-0
RFIF<7:1>							—
bit 7							bit 0

Legend:			
R = Readable bit	W = Writable bit	U = Unimplemented bit, read as ‘0’	
-n = Value at POR	‘1’ = Bit is set	‘0’ = Bit is cleared	x = Bit is unknown

bit 15-8 **RFIF<15:8>:** Unimplemented

bit 7-1 **RFIF<7:1>:** Receive FIFO Interrupt Pending bits
`1` = One or more enabled receive FIFO interrupts are pending
`0` = No enabled receive FIFO interrupts are pending

bit 0 **Unimplemented:** Read as ‘`0`’

Note 1: C1RXIFL: FIFO: RFIFx = ‘or’ of enabled RX FIFO flags (flags need to be cleared in the FIFO register).

REGISTER 3-120: C1RXOVIFH: CAN RECEIVE OVERFLOW INTERRUPT STATUS REGISTER HIGH(1)

R-0	R-0	R-0	R-0	R-0	R-0	R-0	R-0
RFOVIF<31:24>							
bit 15							bit 8

R-0	R-0	R-0	R-0	R-0	R-0	R-0	R-0
RFOVIF<23:16>							
bit 7							bit 0

Legend:			
R = Readable bit	W = Writable bit	U = Unimplemented bit, read as ‘0’	
-n = Value at POR	‘1’ = Bit is set	‘0’ = Bit is cleared	x = Bit is unknown

bit 15-0 **RFOVIF<31:16>:** Unimplemented

Note 1: C1RXOVIFH: FIFO: RFOVIFx (flag needs to be cleared in the FIFO register).

REGISTER 3-121: C1RXOVIFL: CAN RECEIVE OVERFLOW INTERRUPT STATUS REGISTER LOW(1)

R-0	R-0	R-0	R-0	R-0	R-0	R-0	R-0
RFOVIF<15:8>							
bit 15							bit 8

R-0	R-0	R-0	R-0	R-0	R-0	R-0	U-0
RFOVIF<7:1>							—
bit 7							bit 0

Legend:			
R = Readable bit	W = Writable bit	U = Unimplemented bit, read as ‘0’	
-n = Value at POR	‘1’ = Bit is set	‘0’ = Bit is cleared	x = Bit is unknown

bit 15-8 **RFOVIF<15:8>:** Unimplemented

bit 7-1 **RFOVIF<7:1>:** Receive FIFO Overflow Interrupt Pending bits
1 = Interrupt is pending
0 = Interrupt is not pending

bit 0 **Unimplemented:** Read as ‘0’

Note 1: C1RXOVIFL: FIFO: RFOVIFx (flag needs to be cleared in the FIFO register).

© 2017-2018 Microchip Technology Inc.

REGISTER 3-122: C1TXIFH: CAN TRANSMIT INTERRUPT STATUS REGISTER HIGH[1]

R-0	R-0	R-0	R-0	R-0	R-0	R-0	R-0
TFIF<31:24>							
bit 15							bit 8

R-0	R-0	R-0	R-0	R-0	R-0	R-0	R-0
TFIF<23:16>							
bit 7							bit 0

Legend:			
R = Readable bit	W = Writable bit	U = Unimplemented bit, read as ‘0’	
-n = Value at POR	‘1’ = Bit is set	‘0’ = Bit is cleared	x = Bit is unknown

bit 15-0 **TFIF<31:16>:** Unimplemented

Note 1: C1TXIFH: FIFO: TFIFx = ‘or’ of the enabled TX FIFO flags (flags need to be cleared in the FIFO register).

REGISTER 3-123: C1TXIFL: CAN TRANSMIT INTERRUPT STATUS REGISTER LOW[1]

R-0	R-0	R-0	R-0	R-0	R-0	R-0	R-0
TFIF<15:8>							
bit 15							bit 8

R-0	R-0	R-0	R-0	R-0	R-0	R-0	R-0
TFIF<7:0>[2]							
bit 7							bit 0

Legend:			
R = Readable bit	W = Writable bit	U = Unimplemented bit, read as ‘0’	
-n = Value at POR	‘1’ = Bit is set	‘0’ = Bit is cleared	x = Bit is unknown

bit 15-8 **TFIF<15:8>:** Unimplemented

bit 7-0 **TFIF<7:0>:** Transmit FIFO/TXQ Interrupt Pending bits[2]
`1` = One or more enabled transmit FIFO/TXQ interrupts are pending
`0` = No enabled transmit FIFO/TXQ interrupts are pending

Note 1: C1TXIFL: FIFO: TFIFx = ‘or’ of the enabled TX FIFO flags (flags need to be cleared in the FIFO register).
2: TFIF0 is for the transmit queue.

REGISTER 3-124: C1TXATIFH: CAN TRANSMIT ATTEMPT INTERRUPT STATUS REGISTER HIGH(1)

R-0	R-0	R-0	R-0	R-0	R-0	R-0	R-0
TFATIF<31:24>							
bit 15							bit 8

R-0	R-0	R-0	R-0	R-0	R-0	R-0	R-0
TFATIF<23:16>							
bit 7							bit 0

Legend:			
R = Readable bit	W = Writable bit	U = Unimplemented bit, read as ‘0’	
-n = Value at POR	‘1’ = Bit is set	‘0’ = Bit is cleared	x = Bit is unknown

bit 15-0 **TFATIF<31:16>:** Unimplemented

Note 1: C1TXATIFH: FIFO: TFATIFx (flag needs to be cleared in the FIFO register).

REGISTER 3-125: C1TXATIFL: CAN TRANSMIT ATTEMPT INTERRUPT STATUS REGISTER LOW(1)

R-0	R-0	R-0	R-0	R-0	R-0	R-0	R-0
TFATIF<15:8>							
bit 15							bit 8

R-0	R-0	R-0	R-0	R-0	R-0	R-0	R-0
TFATIF<7:0>(2)							
bit 7							bit 0

Legend:			
R = Readable bit	W = Writable bit	U = Unimplemented bit, read as ‘0’	
-n = Value at POR	‘1’ = Bit is set	‘0’ = Bit is cleared	x = Bit is unknown

bit 15-8 **TFATIF<15:8>:** Unimplemented

bit 7-0 **TFATIF<7:0>:** Transmit FIFO/TXQ Attempt Interrupt Pending bits(2)

`1` = Interrupt is pending
`0` = Interrupt is not pending

Note 1: C1TXATIFL: FIFO: TFATIFx (flag needs to be cleared in the FIFO register).
2: TFATIF0 is for the transmit queue.

© 2017-2018 Microchip Technology Inc.

REGISTER 3-126: C1TXREQH: CAN TRANSMIT REQUEST REGISTER HIGH

S/HC-0	S/HC-0	S/HC-0	S/HC-0	S/HC-0	S/HC-0	S/HC-0	S/HC-0
TXREQ<31:24>							
bit 15							bit 8

R/W-0	R/W-0	R/W-0	R/W-0	R/W-0	R/W-0	R/W-0	S/HC-0
TXREQ<23:16>							
bit 7							bit 0

Legend:	S = Settable bit	HC = Hardware Clearable bit	
R = Readable bit	W = Writable bit	U = Unimplemented bit, read as ‘0’	
-n = Value at POR	‘1’ = Bit is set	‘0’ = Bit is cleared	x = Bit is unknown

bit 15-0 **TXREQ<31:16>:** Unimplemented

REGISTER 3-127: C1TXREQL: CAN TRANSMIT REQUEST REGISTER LOW

S/HC-0	S/HC-0	S/HC-0	S/HC-0	S/HC-0	S/HC-0	S/HC-0	S/HC-0
TXREQ<15:8>							
bit 15							bit 8

S/HC-0	S/HC-0	S/HC-0	S/HC-0	S/HC-0	S/HC-0	S/HC-0	S/HC-0s
TXREQ<7:1>							TXREQ0
bit 7							bit 0

Legend:	S = Settable bit	HC = Hardware Clearable bit	
R = Readable bit	W = Writable bit	U = Unimplemented bit, read as ‘0’	
-n = Value at POR	‘1’ = Bit is set	‘0’ = Bit is cleared	x = Bit is unknown

bit 15-8 **TXREQ<15:8>:** Unimplemented

bit 7-1 **TXREQ<7:1>:** Message Send Request bits

TXEN = 1 (object configured as a transmit object):
Setting this bit to ‘1’ requests sending a message. The bit will automatically clear when the message(s) queued in the object is (are) successfully sent. This bit can NOT be used for aborting a transmission.

TXEN = 0 (object configured as a receive object):
This bit has no effect.

bit 0 **TXREQ0:** Transmit Queue Message Send Request bit

Setting this bit to ‘1’ requests sending a message. The bit will automatically clear when the message(s) queued in the object is (are) successfully sent. This bit can NOT be used for aborting a transmission.

REGISTER 3-128: C1FIFOBAH: CAN MESSAGE MEMORY BASE ADDRESS REGISTER HIGH

R/W-0	R/W-0	R/W-0	R/W-0	R/W-0	R/W-0	R/W-0	R/W-0
FIFOBA<31:24>							
bit 15							bit 8

R/W-0	R/W-0	R/W-0	R/W-0	R/W-0	R/W-0	R/W-0	R/W-0
FIFOBA<23:16>							
bit 7							bit 0

Legend:			
R = Readable bit	W = Writable bit	U = Unimplemented bit, read as ‘0’	
-n = Value at POR	‘1’ = Bit is set	‘0’ = Bit is cleared	x = Bit is unknown

bit 15-0 **FIFOBA<31:16>:** Message Memory Base Address bits
Defines the base address for the transmit event FIFO followed by the message objects.

REGISTER 3-129: C1FIFOBAL: CAN MESSAGE MEMORY BASE ADDRESS REGISTER LOW

R/W-0	R/W-0	R/W-0	R/W-0	R/W-0	R/W-0	R/W-0	R/W-0
FIFOBA<15:8>							
bit 15							bit 8

R/W-0	R/W-0	R/W-0	R/W-0	R/W-0	R/W-0	R-0	R-0
FIFOBA<7:0>							
bit 7							bit 0

Legend:			
R = Readable bit	W = Writable bit	U = Unimplemented bit, read as ‘0’	
-n = Value at POR	‘1’ = Bit is set	‘0’ = Bit is cleared	x = Bit is unknown

bit 15-0 **FIFOBA<15:0>:** Message Memory Base Address bits
Defines the base address for the transmit event FIFO followed by the message objects.

© 2017-2018 Microchip Technology Inc.

REGISTER 3-130: C1TXQCONH: CAN TRANSMIT QUEUE CONTROL REGISTER HIGH

R/W-0	R/W-0	R/W-0	R/W-0	R/W-0	R/W-0	R/W-0	R/W-0
PLSIZE2(1)	PLSIZE1(1)	PLSIZE0(1)	FSIZE4(1)	FSIZE3(1)	FSIZE2(1)	FSIZE1(1)	FSIZE0(1)
bit 15							bit 8

U-0	R/W-1	R/W-1	R/W-0	R/W-0	R/W-0	R/W-0	R/W-0
—	TXAT1	TXAT0	TXPRI4	TXPRI3	TXPRI2	TXPRI1	TXPRI0
bit 7							bit 0

Legend:			
R = Readable bit	W = Writable bit	U = Unimplemented bit, read as ‘0’	
-n = Value at POR	‘1’ = Bit is set	‘0’ = Bit is cleared	x = Bit is unknown

bit 15-13 **PLSIZE<2:0>:** Payload Size bits(1)
`111` = 64 data bytes
`110` = 48 data bytes
`101` = 32 data bytes
`100` = 24 data bytes
`011` = 20 data bytes
`010` = 16 data bytes
`001` = 12 data bytes
`000` = 8 data bytes

bit 12-8 **FSIZE<4:0>:** FIFO Size bits(1)
`11111` = FIFO is 32 messages deep
`...`
`00010` = FIFO is 3 messages deep
`00001` = FIFO is 2 messages deep
`00000` = FIFO is 1 message deep

bit 7 **Unimplemented:** Read as ‘`0`’

bit 6-5 **TXAT<1:0>:** Retransmission Attempts bits
This feature is enabled when RTXAT (C1CONH<0>) is set.
`11` = Unlimited number of retransmission attempts
`10` = Unlimited number of retransmission attempts
`01` = Three retransmission attempts
`00` = Disables retransmission attempts

bit 4-0 **TXPRI<4:0>:** Message Transmit Priority bits
`11111` = Highest message priority
`...`
`00000` = Lowest message priority

Note 1: These bits can only be modified in Configuration mode (OPMOD<2:0> = `100`).

REGISTER 3-131: C1TXQCONL: CAN TRANSMIT QUEUE CONTROL REGISTER LOW

U-0	U-0	U-0	U-0	U-0	R/W-0	R/W-0	R/W-0
—	—	—	—	—	FRESET	TXREQ	UINC
bit 15							bit 8

R-0	U-0	U-0	HS/C-0	U-0	R/W-0	U-0	R/W-0
TXEN	—	—	TXATIE	—	TXQEIE	—	TXQNIE
bit 7							bit 0

Legend:	HS = Hardware Settable bit	C = Clearable bit	
R = Readable bit	W = Writable bit	U = Unimplemented bit, read as ‘0’	
-n = Value at POR	‘1’ = Bit is set	‘0’ = Bit is cleared	x = Bit is unknown

bit 15-11 **Unimplemented:** Read as ‘0’

bit 10 **FRESET:** FIFO Reset bit
- 1 = FIFO will be reset when bit is set, cleared by hardware when FIFO is reset; user should poll whether this bit is clear before taking any action
- 0 = No effect

bit 9 **TXREQ:** Message Send Request bit
- 1 = Requests sending a message; the bit will automatically clear when all the messages queued in the TXQ are successfully sent
- 0 = Clearing the bit to ‘0’ while set (‘1’) will request a message abort

bit 8 **UINC:** Increment Head/Tail bit

When this bit is set, the FIFO head will increment by a single message.

bit 7 **TXEN:** TX Enable bit

bit 6-5 **Unimplemented:** Read as ‘0’

bit 4 **TXATIE:** Transmit Attempts Exhausted Interrupt Enable bit
- 1 = Enables interrupt
- 0 = Disables interrupt

bit 3 **Unimplemented:** Read as ‘0’

bit 2 **TXQEIE:** Transmit Queue Empty Interrupt Enable bit
- 1 = Interrupt is enabled for TXQ empty
- 0 = Interrupt is disabled for TXQ empty

bit 1 **Unimplemented:** Read as ‘0’

bit 0 **TXQNIE:** Transmit Queue Not Full Interrupt Enable bit
- 1 = Interrupt is enabled for TXQ not full
- 0 = Interrupt is disabled for TXQ not full

© 2017-2018 Microchip Technology Inc.

REGISTER 3-132: C1TXQSTA: CAN TRANSMIT QUEUE STATUS REGISTER

U-0	U-0	U-0	R-0	R-0	R-0	R-0	R-0
—	—	—	TXQCI4(1)	TXQCI3(1)	TXQCI2(1)	TXQCI1(1)	TXQCI0(1)
bit 15							bit 8

R-0	R-0	R-0	HS/C-0	U-0	R-1	U-0	R-1
TXABT(2)	TXLARB	TXERR	TXATIF	—	TXQEIF	—	TXQNIF
bit 7							bit 0

Legend:	HS = Hardware Settable bit	C = Clearable bit	
R = Readable bit	W = Writable bit	U = Unimplemented bit, read as ‘0’	
-n = Value at POR	‘1’ = Bit is set	‘0’ = Bit is cleared	x = Bit is unknown

bit 15-13 **Unimplemented:** Read as ‘0’

bit 12-8 **TXQCI<4:0>:** Transmit Message Queue Index bits(1)
A read of this register will return an index to the message that the FIFO will next attempt to transmit.

bit 7 **TXABT:** Message Aborted Status bit(2)
1 = Message was aborted
0 = Message completed successfully

bit 6 **TXLARB:** Message Lost Arbitration Status bit
1 = Message lost arbitration while being sent
0 = Message did not lose arbitration while being sent

bit 5 **TXERR:** Error Detected During Transmission bit
1 = A bus error occurred while the message was being sent
0 = A bus error did not occur while the message was being sent

bit 4 **TXATIF:** Transmit Attempts Exhausted Interrupt Pending bit
1 = Interrupt is pending
0 = Interrupt is not pending

bit 3 **Unimplemented:** Read as ‘0’

bit 2 **TXQEIF:** Transmit Queue Empty Interrupt Flag bit
1 = TXQ is empty
0 = TXQ is not empty, at least one message is queued to be transmitted

bit 1 **Unimplemented:** Read as ‘0’

bit 0 **TXQNIF:** Transmit Queue Not Full Interrupt Flag bit
1 = TXQ is not full
0 = TXQ is full

Note 1: The TXQCI<4:0> bits give a zero-indexed value to the message in the TXQ. If the TXQ is four messages deep (FSIZE<4:0> = 3), TXQCIx will take on a value of 0 to 3, depending on the state of the TXQ.

2: This bit is updated when a message completes (or aborts) or when the TXQ is reset.

REGISTER 3-133: C1FIFOCONHx: CAN FIFO CONTROL REGISTER x (x = 1 TO 7) HIGH

R/W-0	R/W-0	R/W-0	R/W-0	R/W-0	R/W-0	R/W-0	R/W-0
PLSIZE2(1)	PLSIZE1(1)	PLSIZE0(1)	FSIZE4(1)	FSIZE3(1)	FSIZE2(1)	FSIZE1(1)	FSIZE0(1)
bit 15							bit 8

U-0	R/W-1	R/W-1	R/W-0	R/W-0	R/W-0	R/W-0	R/W-0
—	TXAT1	TXAT0	TXPRI4	TXPRI3	TXPRI2	TXPRI1	TXPRI0
bit 7							bit 0

Legend:			
R = Readable bit	W = Writable bit	U = Unimplemented bit, read as ‘0’	
-n = Value at POR	‘1’ = Bit is set	‘0’ = Bit is cleared	x = Bit is unknown

bit 15-13 **PLSIZE<2:0>:** Payload Size bits(1)
`111` = 64 data bytes
`110` = 48 data bytes
`101` = 32 data bytes
`100` = 24 data bytes
`011` = 20 data bytes
`010` = 16 data bytes
`001` = 12 data bytes
`000` = 8 data bytes

bit 12-8 **FSIZE<4:0>:** FIFO Size bits(1)
`11111` = FIFO is 32 messages deep
`...`
`00010` = FIFO is 3 messages deep
`00001` = FIFO is 2 messages deep
`00000` = FIFO is 1 message deep

bit 7 **Unimplemented:** Read as ‘`0`’

bit 6-5 **TXAT<1:0>:** Retransmission Attempts bits
This feature is enabled when RTXAT (C1CONH<0>) is set.
`11` = Unlimited number of retransmission attempts
`10` = Unlimited number of retransmission attempts
`01` = Three retransmission attempts
`00` = Disables retransmission attempts

bit 4-0 **TXPRI<4:0>:** Message Transmit Priority bits
`11111` = Highest message priority
`...`
`00000` = Lowest message priority

Note 1: These bits can only be modified in Configuration mode (OPMOD<2:0> = `100`).

© 2017-2018 Microchip Technology Inc.

REGISTER 3-134: C1FIFOCONLx: CAN FIFO CONTROL REGISTER x (x = 1 TO 7) LOW

U-0	U-0	U-0	U-0	U-0	S/HC-1	R/W/HC-0	S/HC-0
—	—	—	—	—	FRESET	TXREQ	UINC
bit 15							bit 8

R/W-0	R/W-0	R/W-0	R/W-0	R/W-0	R/W-0	R/W-0	R/W-0
TXEN	RTREN	RXTSEN(1)	TXATIE	RXOVIE	TFERFFIE	TFHRFHIE	TFNRFNIE
bit 7							bit 0

Legend:	S = Settable bit	HC = Hardware Clearable bit	
R = Readable bit	W = Writable bit	U = Unimplemented bit, read as ‘0’	
-n = Value at POR	‘1’ = Bit is set	‘0’ = Bit is cleared	x = Bit is unknown

bit 15-11 **Unimplemented:** Read as ‘0’

bit 10 **FRESET:** FIFO Reset bit
1 = FIFO will be reset when bit is set, cleared by hardware when FIFO is reset; user should poll whether this bit is clear before taking any action
0 = No effect

bit 9 **TXREQ:** Message Send Request bit
TXEN = 1 (FIFO configured as a transmit FIFO):
1 = Requests sending a message; the bit will automatically clear when all the messages queued in the FIFO are successfully sent
0 = Clearing the bit to ‘0’ while set (‘1’) will request a message abort
TXEN = 0 (FIFO configured as a receive FIFO):
This bit has no effect.

bit 8 **UINC:** Increment Head/Tail bit
TXEN = 1 (FIFO configured as a transmit FIFO):
When this bit is set, the FIFO head will increment by a single message.
TXEN = 0 (FIFO configured as a receive FIFO):
When this bit is set, the FIFO tail will increment by a single message.

bit 7 **TXEN:** TX/RX Buffer Selection bit
1 = Transmits message object
0 = Receives message object

bit 6 **RTREN:** Auto-Remote Transmit (RTR) Enable bit
1 = When a Remote Transmit is received, TXREQ will be set
0 = When a Remote Transmit is received, TXREQ will be unaffected

bit 5 **RXTSEN:** Received Message Timestamp Enable bit(1)
1 = Captures timestamp in received message object in RAM
0 = Does not capture timestamp

bit 4 **TXATIE:** Transmit Attempts Exhausted Interrupt Enable bit
1 = Enables interrupt
0 = Disables interrupt

bit 3 **RXOVIE:** Overflow Interrupt Enable bit
1 = Interrupt is enabled for overflow event
0 = Interrupt is disabled for overflow event

Note 1: This bit can only be modified in Configuration mode (OPMOD<2:0> = 100).

REGISTER 3-134: C1FIFOCONLx: CAN FIFO CONTROL REGISTER x (x = 1 TO 7) LOW (CONTINUED)

bit 2 **TFERFFIE:** Transmit/Receive FIFO Empty/Full Interrupt Enable bit

TXEN = 1 (FIFO configured as a transmit FIFO):
Transmit FIFO Empty Interrupt Enable
1 = Interrupt is enabled for FIFO empty
0 = Interrupt is disabled for FIFO empty

TXEN = 0 (FIFO configured as a receive FIFO):
Receive FIFO Full Interrupt Enable
1 = Interrupt is enabled for FIFO full
0 = Interrupt is disabled for FIFO full

bit 1 **TFHRFHIE:** Transmit/Receive FIFO Half Empty/Half Full Interrupt Enable bit

TXEN = 1 (FIFO configured as a transmit FIFO):
Transmit FIFO Half Empty Interrupt Enable
1 = Interrupt is enabled for FIFO half empty
0 = Interrupt is disabled for FIFO half empty

TXEN = 0 (FIFO configured as a receive FIFO):
Receive FIFO Half Full Interrupt Enable
1 = Interrupt is enabled for FIFO half full
0 = Interrupt is disabled for FIFO half full

bit 0 **TFNRFNIE:** Transmit/Receive FIFO Not Full/Not Empty Interrupt Enable bit

TXEN = 1 (FIFO configured as a transmit FIFO):
Transmit FIFO Not Full Interrupt Enable
1 = Interrupt is enabled for FIFO not full
0 = Interrupt is disabled for FIFO not full

TXEN = 0 (FIFO configured as a receive FIFO):
Receive FIFO Not Empty Interrupt Enable
1 = Interrupt is enabled for FIFO not empty
0 = Interrupt is disabled for FIFO not empty

Note 1: This bit can only be modified in Configuration mode (OPMOD<2:0> = 100).

© 2017-2018 Microchip Technology Inc.

REGISTER 3-135: C1FIFOSTAx: CAN FIFO STATUS REGISTER x (x = 1 TO 7)

U-0	U-0	U-0	R-0	R-0	R-0	R-0	R-0
—	—	—	FIFOCI4(1)	FIFOCI3(1)	FIFOCI2(1)	FIFOCI1(1)	FIFOCI0(1)
bit 15							bit 8

R-0	R-0	R-0	HS/C-0	HS/C-0	R-0	R-0	R-0
TXABT(3)	TXLARB(2)	TXERR(2)	TXATIF	RXOVIF	TFERFFIF	TFHRFHIF	TFNRFNIF
bit 7							bit 0

Legend:	HS = Hardware Settable bit	C = Clearable bit	
R = Readable bit	W = Writable bit	U = Unimplemented bit, read as ‘0’	
-n = Value at POR	‘1’ = Bit is set	‘0’ = Bit is cleared	x = Bit is unknown

bit 15-13 **Unimplemented:** Read as ‘0’

bit 12-8 **FIFOCI<4:0>:** FIFO Message Index bits(1)

TXEN = 1 (FIFO configured as a transmit buffer):
A read of this register will return an index to the message that the FIFO will next attempt to transmit.

TXEN = 0 (FIFO configured as a receive buffer):
A read of this register will return an index to the message that the FIFO will use to save the next message.

bit 7 **TXABT:** Message Aborted Status bit(3)

1 = Message was aborted
0 = Message completed successfully

bit 6 **TXLARB:** Message Lost Arbitration Status bit(2)

1 = Message lost arbitration while being sent
0 = Message did not lose arbitration while being sent

bit 5 **TXERR:** Error Detected During Transmission bit(2)

1 = A bus error occurred while the message was being sent
0 = A bus error did not occur while the message was being sent

bit 4 **TXATIF:** Transmit Attempts Exhausted Interrupt Pending bit

TXEN = 1 (FIFO configured as a transmit buffer):
1 = Interrupt is pending
0 = Interrupt is not pending

TXEN = 0 (FIFO configured as a receive buffer):
Unused, read as ‘0’.

bit 3 **RXOVIF:** Receive FIFO Overflow Interrupt Flag bit

TXEN = 1 (FIFO configured as a transmit buffer):
Unused, read as ‘0’.

TXEN = 0 (FIFO configured as a receive buffer):
1 = Overflow event has occurred
0 = No overflow event has occurred

Note 1: FIFOCI<4:0> gives a zero-indexed value to the message in the FIFO. If the FIFO is four messages deep (FSIZE<4:0> = 3), FIFOCIx will take on a value of 0 to 3, depending on the state of the FIFO.

2: These bits are updated when a message completes (or aborts) or when the FIFO is reset.

3: This bit is reset on any read of this register or when the TXQ is reset. The bits are cleared when TXREQ is set or using an SPI write.

REGISTER 3-135: C1FIFOSTAx: CAN FIFO STATUS REGISTER x (x = 1 TO 7) (CONTINUED)

bit 2 **TFERFFIF:** Transmit/Receive FIFO Empty/Full Interrupt Flag bit

TXEN = 1 (FIFO configured as a transmit FIFO):
Transmit FIFO Empty Interrupt Flag
1 = FIFO is empty
0 = FIFO is not empty, at least one message is queued to be transmitted

TXEN = 0 (FIFO configured as a receive FIFO):
Receive FIFO Full Interrupt Flag
1 = FIFO is full
0 = FIFO is not full

bit 1 **TFHRFHIF:** Transmit/Receive FIFO Half Empty/Half Full Interrupt Flag bit

TXEN = 1 (FIFO configured as a transmit FIFO):
Transmit FIFO Half Empty Interrupt Flag
1 = FIFO is ≤ half full
0 = FIFO is > half full

TXEN = 0 (FIFO configured as a receive FIFO):
Receive FIFO Half Full Interrupt Flag
1 = FIFO is ≥ half full
0 = FIFO is < half full

bit 0 **TFNRFNIF:** Transmit/Receive FIFO Not Full/Not Empty Interrupt Flag bit

TXEN = 1 (FIFO configured as a transmit FIFO):
Transmit FIFO Not Full Interrupt Flag
1 = FIFO is not full
0 = FIFO is full

TXEN = 0 (FIFO configured as a receive FIFO):
Receive FIFO Not Empty Interrupt Flag
1 = FIFO is not empty, has at least one message
0 = FIFO is empty

Note 1: FIFOCI<4:0> gives a zero-indexed value to the message in the FIFO. If the FIFO is four messages deep (FSIZE<4:0> = 3), FIFOCIx will take on a value of 0 to 3, depending on the state of the FIFO.

2: These bits are updated when a message completes (or aborts) or when the FIFO is reset.

3: This bit is reset on any read of this register or when the TXQ is reset. The bits are cleared when TXREQ is set or using an SPI write.

© 2017-2018 Microchip Technology Inc.

REGISTER 3-136: C1TEFCONH: CAN TRANSMIT EVENT FIFO CONTROL REGISTER HIGH

U-0	U-0	U-0	R/W-0	R/W-0	R/W-0	R/W-0	R/W-0
—	—	—	FSIZE<4:0>(1)				
bit 15							bit 8

U-0	U-0	U-0	U-0	U-0	U-0	U-0	U-0
—	—	—	—	—	—	—	—
bit 7							bit 0

Legend:			
R = Readable bit	W = Writable bit	U = Unimplemented bit, read as ‘0’	
-n = Value at POR	‘1’ = Bit is set	‘0’ = Bit is cleared	x = Bit is unknown

bit 15-13 **Unimplemented:** Read as ‘0’

bit 12-8 **FSIZE<4:0>:** FIFO Size bits(1)

11111 = FIFO is 32 messages deep
...
00010 = FIFO is 3 messages deep
00001 = FIFO is 2 messages deep
00000 = FIFO is 1 message deep

bit 7-0 **Unimplemented:** Read as ‘0’

Note 1: These bits can only be modified in Configuration mode (OPMOD<2:0> = 100).

REGISTER 3-137: C1TEFCONL: CAN TRANSMIT EVENT FIFO CONTROL REGISTER LOW

U-0	U-0	U-0	U-0	U-0	S/HC-0	U-0	S/HC-0
—	—	—	—	—	FRESET	—	UINC
bit 15							bit 8

U-0	U-0	R/W-0	U-0	R/W-0	R/W-0	R/W-0	R/W-0
—	—	TEFTSEN(1)	—	TEFOVIE	TEFFIE	TEFHIE	TEFNEIE
bit 7							bit 0

Legend:	S = Settable bit	HC = Hardware Clearable bit	
R = Readable bit	W = Writable bit	U = Unimplemented bit, read as ‘0’	
-n = Value at POR	‘1’ = Bit is set	‘0’ = Bit is cleared	x = Bit is unknown

bit 15-11 **Unimplemented:** Read as ‘0’

bit 10 **FRESET:** FIFO Reset bit
1 = FIFO will be reset when bit is set, cleared by hardware when FIFO is reset; the user should poll whether this bit is clear before taking any action
0 = No effect

bit 9 **Unimplemented:** Read as ‘0’

bit 8 **UINC:** Increment Tail bit
1 = When this bit is set, the FIFO tail will increment by a single message
0 = FIFO tail will not increment

bit 7-6 **Unimplemented:** Read as ‘0’

bit 5 **TEFTSEN:** Transmit Event FIFO Timestamp Enable bit(1)
1 = Timestamps elements in TEF
0 = Does not timestamp elements in TEF

bit 4 **Unimplemented:** Read as ‘0’

bit 3 **TEFOVIE:** Transmit Event FIFO Overflow Interrupt Enable bit
1 = Interrupt is enabled for overflow event
0 = Interrupt is disabled for overflow event

bit 2 **TEFFIE:** Transmit Event FIFO Full Interrupt Enable bit
1 = Interrupt is enabled for FIFO full
0 = Interrupt is disabled for FIFO full

bit 1 **TEFHIE:** Transmit Event FIFO Half Full Interrupt Enable bit
1 = Interrupt is enabled for FIFO half full
0 = Interrupt is disabled for FIFO half full

bit 0 **TEFNEIE:** Transmit Event FIFO Not Empty Interrupt Enable bit
1 = Interrupt is enabled for FIFO not empty
0 = Interrupt is disabled for FIFO not empty

Note 1: These bits can only be modified in Configuration mode (OPMOD<2:0> = 100).

© 2017-2018 Microchip Technology Inc.

REGISTER 3-138: C1TEFSTA: CAN TRANSMIT EVENT FIFO STATUS REGISTER

U-0	U-0	U-0	U-0	U-0	U-0	U-0	U-0
—	—	—	—	—	—	—	—
bit 15							bit 8

U-0	U-0	U-0	U-0	S/HC-0	R-0	R-0	R-0
—	—	—	—	TEFOVIF	TEFFIF(1)	TEFHIF(1)	TEFNEIF(1)
bit 7							bit 0

Legend:	HC = Hardware Clearable bit	S = Settable by ‘1’ bit	
R = Readable bit	W = Writable bit	U = Unimplemented bit, read as ‘0’	
-n = Value at POR	‘1’ = Bit is set	‘0’ = Bit is cleared	x = Bit is unknown

bit 15-4 **Unimplemented:** Read as ‘0’

bit 3 **TEFOVIF:** Transmit Event FIFO Overflow Interrupt Flag bit
1 = Overflow event has occurred
0 = No overflow event has occurred

bit 2 **TEFFIF:** Transmit Event FIFO Full Interrupt Flag bit(1)
1 = FIFO is full
0 = FIFO is not full

bit 1 **TEFHIF:** Transmit Event FIFO Half Full Interrupt Flag bit(1)
1 = FIFO is ≥ half full
0 = FIFO is < half full

bit 0 **TEFNEIF:** Transmit Event FIFO Not Empty Interrupt Flag bit(1)
1 = FIFO is not empty
0 = FIFO is empty

Note 1: These bits are read-only and reflect the status of the FIFO.

REGISTER 3-139: C1FIFOUAHx: CAN FIFO USER ADDRESS REGISTER x (x = 1 TO 7) HIGH(1)

R-x	R-x	R-x	R-x	R-x	R-x	R-x	R-x
FIFOUA<31:24>							
bit 15							bit 8

R-x	R-x	R-x	R-x	R-x	R-x	R-x	R-x
FIFOUA<23:16>							
bit 7							bit 0

Legend:			
R = Readable bit	W = Writable bit	U = Unimplemented bit, read as ‘0’	
-n = Value at POR	‘1’ = Bit is set	‘0’ = Bit is cleared	x = Bit is unknown

bit 15-0 **FIFOUA<31:16>:** FIFO User Address bits

TXEN = 1 (FIFO configured as a transmit buffer):
A read of this register will return the address where the next message is to be written (FIFO head).

TXEN = 0 (FIFO configured as a receive buffer):
A read of this register will return the address where the next message is to be read (FIFO tail).

Note 1: This register is not ensured to read correctly in Configuration mode and should only be accessed when the module is not in Configuration mode.

REGISTER 3-140: C1FIFOUALx: CAN FIFO USER ADDRESS REGISTER x (x = 1 TO 7) LOW(1)

R-x	R-x	R-x	R-x	R-x	R-x	R-x	R-x
FIFOUA<15:8>							
bit 15							bit 8

R-x	R-x	R-x	R-x	R-x	R-x	R-x	R-x
FIFOUA<7:0>							
bit 7							bit 0

Legend:			
R = Readable bit	W = Writable bit	U = Unimplemented bit, read as ‘0’	
-n = Value at POR	‘1’ = Bit is set	‘0’ = Bit is cleared	x = Bit is unknown

bit 15-0 **FIFOUA<15:0>:** FIFO User Address bits

TXEN = 1 (FIFO configured as a transmit buffer):
A read of this register will return the address where the next message is to be written (FIFO head).

TXEN = 0 (FIFO configured as a receive buffer):
A read of this register will return the address where the next message is to be read (FIFO tail).

Note 1: This register is not ensured to read correctly in Configuration mode and should only be accessed when the module is not in Configuration mode.

© 2017-2018 Microchip Technology Inc.

REGISTER 3-141: C1TEFUAH: CAN TRANSMIT EVENT FIFO USER ADDRESS REGISTER HIGH(1)

R-x	R-x	R-x	R-x	R-x	R-x	R-x	R-x
TEFUA<31:24>							
bit 15							bit 8

R-x	R-x	R-x	R-x	R-x	R-x	R-x	R-x
TEFUA<23:16>							
bit 7							bit 0

Legend:			
R = Readable bit	W = Writable bit	U = Unimplemented bit, read as ‘0’	
-n = Value at POR	‘1’ = Bit is set	‘0’ = Bit is cleared	x = Bit is unknown

bit 15-0 **TEFUA<31:16>:** Transmit Event FIFO User Address bits
A read of this register will return the address where the next event is to be read (FIFO tail).

Note 1: This register is not ensured to read correctly in Configuration mode and should only be accessed when the module is not in Configuration mode.

REGISTER 3-142: C1TEFUAL: CAN TRANSMIT EVENT FIFO USER ADDRESS REGISTER LOW(1)

R-x	R-x	R-x	R-x	R-x	R-x	R-x	R-x
TEFUA<15:8>							
bit 15							bit 8

R-x	R-x	R-x	R-x	R-x	R-x	R-x	R-x
TEFUA<7:0>							
bit 7							bit 0

Legend:			
R = Readable bit	W = Writable bit	U = Unimplemented bit, read as ‘0’	
-n = Value at POR	‘1’ = Bit is set	‘0’ = Bit is cleared	x = Bit is unknown

bit 15-0 **TEFUA<15:0>:** Transmit Event FIFO User Address bits
A read of this register will return the address where the next event is to be read (FIFO tail).

Note 1: This register is not ensured to read correctly in Configuration mode and should only be accessed when the module is not in Configuration mode.

REGISTER 3-143: C1TXQUAH: CAN TRANSMIT QUEUE USER ADDRESS REGISTER HIGH(1)

R-x	R-x	R-x	R-x	R-x	R-x	R-x	R-x
TXQUA<31:24>							
bit 15							bit 8

R-x	R-x	R-x	R-x	R-x	R-x	R-x	R-x
TXQUA<23:16>							
bit 7							bit 0

Legend:			
R = Readable bit	W = Writable bit	U = Unimplemented bit, read as ‘0’	
-n = Value at POR	‘1’ = Bit is set	‘0’ = Bit is cleared	x = Bit is unknown

bit 15-0 **TXQUA<31:16>:** TXQ User Address bits
A read of this register will return the address where the next message is to be written (TXQ head).

Note 1: This register is not ensured to read correctly in Configuration mode and should only be accessed when the module is not in Configuration mode.

REGISTER 3-144: C1TXQUAL: CAN TRANSMIT QUEUE USER ADDRESS REGISTER LOW(1)

R-x	R-x	R-x	R-x	R-x	R-x	R-x	R-x
TXQUA<15:8>							
bit 15							bit 8

R-x	R-x	R-x	R-x	R-x	R-x	R-x	R-x
TXQUA<7:0>							
bit 7							bit 0

Legend:			
R = Readable bit	W = Writable bit	U = Unimplemented bit, read as ‘0’	
-n = Value at POR	‘1’ = Bit is set	‘0’ = Bit is cleared	x = Bit is unknown

bit 15-0 **TXQUA<15:0>:** TXQ User Address bits
A read of this register will return the address where the next message is to be written (TXQ head).

Note 1: This register is not ensured to read correctly in Configuration mode and should only be accessed when the module is not in Configuration mode.

© 2017-2018 Microchip Technology Inc.

REGISTER 3-145: C1TRECH: CAN TRANSMIT/RECEIVE ERROR COUNT REGISTER HIGH

U-0	U-0	U-0	U-0	U-0	U-0	U-0	U-0
—	—	—	—	—	—	—	—
bit 15							bit 8

U-0	U-0	R-1	R-0	R-0	R-0	R-0	R-0
—	—	TXBO	TXBP	RXBP	TXWARN	RXWARN	EWARN
bit 7							bit 0

Legend:			
R = Readable bit	W = Writable bit	U = Unimplemented bit, read as ‘0’	
-n = Value at POR	‘1’ = Bit is set	‘0’ = Bit is cleared	x = Bit is unknown

bit 15-6 **Unimplemented:** Read as ‘0’

bit 5 **TXBO:** Transmitter in Error State Bus Off bit (TERRCNT<7:0> > 255)
In Configuration mode, TXBO is set since the module is not on the bus.

bit 4 **TXBP:** Transmitter in Error State Bus Passive bit (TERRCNT<7:0> > 127)

bit 3 **RXBP:** Receiver in Error State Bus Passive bit (RERRCNT<7:0> > 127)

bit 2 **TXWARN:** Transmitter in Error State Warning bit (128 > TERRCNT<7:0> > 95)

bit 1 **RXWARN:** Receiver in Error State Warning bit (128 > RERRCNT<7:0> > 95)

bit 0 **EWARN:** Transmitter or Receiver in Error State Warning bit

REGISTER 3-146: C1TRECL: CAN TRANSMIT/RECEIVE ERROR COUNT REGISTER LOW

R-0	R-0	R-0	R-0	R-0	R-0	R-0	R-0
			TERRCNT<7:0>				
bit 15							bit 8

R-0	R-0	R-0	R-0	R-0	R-0	R-0	R-0
			RERRCNT<7:0>				
bit 7							bit 0

Legend:			
R = Readable bit	W = Writable bit	U = Unimplemented bit, read as ‘0’	
-n = Value at POR	‘1’ = Bit is set	‘0’ = Bit is cleared	x = Bit is unknown

bit 15-8 **TERRCNT<7:0>:** Transmit Error Counter bits

bit 7-0 **RERRCNT<7:0>:** Receive Error Counter bits

REGISTER 3-147: C1BDIAG0H: CAN BUS DIAGNOSTICS REGISTER 0 HIGH

R/W-0	R/W-0	R/W-0	R/W-0	R/W-0	R/W-0	R/W-0	R/W-0
DTERRCNT<7:0>							
bit 15							bit 8

R/W-0	R/W-0	R/W-0	R/W-0	R/W-0	R/W-0	R/W-0	R/W-0
DRERRCNT<7:0>							
bit 7							bit 0

Legend:			
R = Readable bit	W = Writable bit	U = Unimplemented bit, read as ‘0’	
-n = Value at POR	‘1’ = Bit is set	‘0’ = Bit is cleared	x = Bit is unknown

bit 15-8 **DTERRCNT<7:0>:** Data Bit Rate Transmit Error Counter bits

bit 7-0 **DRERRCNT<7:0>:** Data Bit Rate Receive Error Counter bits

REGISTER 3-148: C1BDIAG0L: CAN BUS DIAGNOSTICS REGISTER 0 LOW

R/W-0	R/W-0	R/W-0	R/W-0	R/W-0	R/W-0	R/W-0	R/W-0
NTERRCNT<7:0>							
bit 15							bit 8

R/W-0	R/W-0	R/W-0	R/W-0	R/W-0	R/W-0	R/W-0	R/W-0
NRERRCNT<7:0>							
bit 7							bit 0

Legend:			
R = Readable bit	W = Writable bit	U = Unimplemented bit, read as ‘0’	
-n = Value at POR	‘1’ = Bit is set	‘0’ = Bit is cleared	x = Bit is unknown

bit 15-8 **NTERRCNT<7:0>:** Nominal Bit Rate Transmit Error Counter bits

bit 7-0 **NRERRCNT<7:0>:** Nominal Bit Rate Receive Error Counter bits

© 2017-2018 Microchip Technology Inc.

REGISTER 3-149: C1BDIAG1H: CAN BUS DIAGNOSTICS REGISTER 1 HIGH

R/W-0	R/W-0	R/C-0	R/W-0	R/W-0	U-0	R/W-0	R/W-0
DLCMM	ESI	DCRCERR	DSTUFERR	DFORMERR	—	DBIT1ERR	DBIT0ERR
bit 15							bit 8

R/W-0	U-0	R/W-0	R/W-0	R/W-0	R/W-0	R/W-0	R/W-0
TXBOERR	—	NCRCERR	NSTUFERR	NFORMERR	NACKERR	NBIT1ERR	NBIT0ERR
bit 7							bit 0

Legend:	C = Clearable bit		
R = Readable bit	W = Writable bit	U = Unimplemented bit, read as ‘0’	
-n = Value at POR	‘1’ = Bit is set	‘0’ = Bit is cleared	x = Bit is unknown

bit 15 **DLCMM:** DLC Mismatch bit
During a transmission or reception, the specified DLC is larger than the PLSIZE<2:0> of the FIFO element.

bit 14 **ESI:** ESI Flag of a Received CAN FD Message Set bit

bit 13 **DCRCERR:** Same as for nominal bit rate

bit 12 **DSTUFERR:** Same as for nominal bit rate

bit 11 **DFORMERR:** Same as for nominal bit rate

bit 10 **Unimplemented:** Read as ‘0’

bit 9 **DBIT1ERR:** Same as for nominal bit rate

bit 8 **DBIT0ERR:** Same as for nominal bit rate

bit 7 **TXBOERR:** Device Went to Bus Off bit (and auto-recovered)

bit 6 **Unimplemented:** Read as ‘0’

bit 5 **NCRCERR:** Received Message with CRC Incorrect Checksum bit
The CRC checksum of a received message was incorrect. The CRC of an incoming message does not match with the CRC calculated from the received data.

bit 4 **NSTUFERR:** Received Message with Illegal Sequence bit
More than 5 equal bits in a sequence have occurred in a part of a received message where this is not allowed.

bit 3 **NFORMERR:** Received Frame Fixed Format bit
A fixed format part of a received frame has the wrong format.

bit 2 **NACKERR:** Transmitted Message Not Acknowledged bit
Transmitted message was not acknowledged.

bit 1 **NBIT1ERR:** Transmitted Message Recessive Level bit
During the transmission of a message (with the exception of the arbitration field), the device wanted to send a recessive level (bit of logical value ‘1’), but the monitored bus value was dominant.

bit 0 **NBIT0ERR:** Transmitted Message Dominant Level bit
During the transmission of a message (or Acknowledge bit, active error flag or overload flag), the device wanted to send a dominant level (data or identifier bit of logical value ‘0’), but the monitored bus value was recessive. During bus off recovery, this status is set each time a sequence of 11 recessive bits has been monitored. This enables the CPU to monitor the proceeding of the bus off recovery sequence (indicating the bus is not stuck at dominant or continuously disturbed).

REGISTER 3-150: C1BDIAG1L: CAN BUS DIAGNOSTICS REGISTER 1 LOW

R/W-0	R/W-0	R/W-0	R/W-0	R/W-0	R/W-0	R/W-0	R/W-0
EFMSGCNT<15:8>							
bit 15							bit 8

R/W-0	R/W-0	R/W-0	R/W-0	R/W-0	R/W-0	R/W-0	R/W-0
EFMSGCNT<7:0>							
bit 7							bit 0

Legend:			
R = Readable bit	W = Writable bit	U = Unimplemented bit, read as ‘0’	
-n = Value at POR	‘1’ = Bit is set	‘0’ = Bit is cleared	x = Bit is unknown

bit 15-0 **EFMSGCNT<15:0>:** Error-Free Message Counter bits

© 2017-2018 Microchip Technology Inc.

REGISTER 3-151: C1FLTCONxH: CAN FILTER CONTROL REGISTER x HIGH (x = 0 TO 3; c = 2, 6, 10, 14; d = 3, 7, 11, 15)

R/W-0	U-0	U-0	R/W-0	R/W-0	R/W-0	R/W-0	R/W-0
FLTENd	—	—	FdBP4	FdBP3	FdBP2	FdBP1	FdBP0
bit 15							bit 8

R/W-0	U-0	U-0	R/W-0	R/W-0	R/W-0	R/W-0	R/W-0
FLTENc	—	—	FcBP4	FcBP3	FcBP2	FcBP1	FcBP0
bit 7							bit 0

Legend:			
R = Readable bit	W = Writable bit	U = Unimplemented bit, read as ‘0’	
-n = Value at POR	‘1’ = Bit is set	‘0’ = Bit is cleared	x = Bit is unknown

bit 15 **FLTENd:** Enable Filter d to Accept Messages bit
`1` = Filter is enabled
`0` = Filter is disabled

bit 14-13 **Unimplemented:** Read as ‘`0`’

bit 12-8 **FdBP<4:0>:** Pointer to Object When Filter d Hits bits
`11111` to `11000` = Reserved
`00111` = Message matching filter is stored in Object 7
`00110` = Message matching filter is stored in Object 6
`...`
`00010` = Message matching filter is stored in Object 2
`00001` = Message matching filter is stored in Object 1
`00000` = Reserved; Object 0 is the TX Queue and can’t receive messages

bit 7 **FLTENc:** Enable Filter c to Accept Messages bit
`1` = Filter is enabled
`0` = Filter is disabled

bit 6-5 **Unimplemented:** Read as ‘`0`’

bit 4-0 **FcBP<4:0>:** Pointer to Object When Filter c Hits bits
`11111` to `11000` = Reserved
`00111` = Message matching filter is stored in Object 7
`00110` = Message matching filter is stored in Object 6
`...`
`00010` = Message matching filter is stored in Object 2
`00001` = Message matching filter is stored in Object 1
`00000` = Reserved; Object 0 is the TX Queue and can’t receive messages

REGISTER 3-152: C1FLTCONxL: CAN FILTER CONTROL REGISTER x LOW (x = 0 TO 3; a = 0, 4, 8, 12; b = 1, 5, 9, 13)

R/W-0	U-0	U-0	R/W-0	R/W-0	R/W-0	R/W-0	R/W-0
FLTENb	—	—	FbBP4	FbBP3	FbBP2	FbBP1	FbBP0
bit 15							bit 8

R/W-0	U-0	U-0	R/W-0	R/W-0	R/W-0	R/W-0	R/W-0
FLTENa	—	—	FaBP4	FaBP3	FaBP2	FaBP1	FaBP0
bit 7							bit 0

Legend:			
R = Readable bit	W = Writable bit	U = Unimplemented bit, read as ‘0’	
-n = Value at POR	‘1’ = Bit is set	‘0’ = Bit is cleared	x = Bit is unknown

bit 15 **FLTENb:** Enable Filter b to Accept Messages bit
`1` = Filter is enabled
`0` = Filter is disabled

bit 14-13 **Unimplemented:** Read as ‘`0`’

bit 12-8 **FbBP<4:0>:** Pointer to Object When Filter b Hits bits
`11111` to `11000` = Reserved
`00111` = Message matching filter is stored in Object 7
`00110` = Message matching filter is stored in Object 6
`...`
`00010` = Message matching filter is stored in Object 2
`00001` = Message matching filter is stored in Object 1
`00000` = Reserved; Object 0 is the TX Queue and can’t receive messages

bit 7 **FLTENa:** Enable Filter a to Accept Messages bit
`1` = Filter is enabled
`0` = Filter is disabled

bit 6-5 **Unimplemented:** Read as ‘`0`’

bit 4-0 **FaBP<4:0>:** Pointer to Object When Filter a Hits bits
`11111` to `11000` = Reserved
`00111` = Message matching filter is stored in Object 7
`00110` = Message matching filter is stored in Object 6
`...`
`00010` = Message matching filter is stored in Object 2
`00001` = Message matching filter is stored in Object 1
`00000` = Reserved; Object 0 is the TX Queue and can’t receive messages

© 2017-2018 Microchip Technology Inc.

REGISTER 3-153: C1FLTOBJxH: CAN FILTER OBJECT REGISTER x HIGH (x = 0 TO 15)

U-0	R/W-0	R/W-0	R/W-0	R/W-0	R/W-0	R/W-0	R/W-0
—	EXIDE	SID11	EID17	EID16	EID15	EID14	EID13
bit 15							bit 8

R/W-0	R/W-0	R/W-0	R/W-0	R/W-0	R/W-0	R/W-0	R/W-0
EID12	EID11	EID10	EID9	EID8	EID7	EID6	EID5
bit 7							bit 0

Legend:			
R = Readable bit	W = Writable bit	U = Unimplemented bit, read as ‘0’	
-n = Value at POR	‘1’ = Bit is set	‘0’ = Bit is cleared	x = Bit is unknown

bit 15 **Unimplemented:** Read as ‘0’

bit 14 **EXIDE:** Extended Identifier Enable bit
If MIDE = 1:
1 = Matches only messages with Extended Identifier addresses
0 = Matches only messages with Standard Identifier addresses

bit 13 **SID11:** Standard Identifier Filter bit

bit 12-0 **EID<17:5>:** Extended Identifier Filter bits
In DeviceNet™ mode, these are the filter bits for the first two data bytes.

REGISTER 3-154: C1FLTOBJxL: CAN FILTER OBJECT REGISTER x LOW (x = 0 TO 15)

R/W-0	R/W-0	R/W-0	R/W-0	R/W-0	R/W-0	R/W-0	R/W-0
EID4	EID3	EID2	EID1	EID0	SID10	SID9	SID8
bit 15							bit 8

R/W-0	R/W-0	R/W-0	R/W-0	R/W-0	R/W-0	R/W-0	R/W-0
SID7	SID6	SID5	SID4	SID3	SID2	SID1	SID0
bit 7							bit 0

Legend:			
R = Readable bit	W = Writable bit	U = Unimplemented bit, read as ‘0’	
-n = Value at POR	‘1’ = Bit is set	‘0’ = Bit is cleared	x = Bit is unknown

bit 15-11 **EID<4:0>:** Extended Identifier Filter bits
In DeviceNet™ mode, these are the filter bits for the first two data bytes.

bit 10-0 **SID<10:0>:** Standard Identifier Filter bits

REGISTER 3-155: C1MASKxH: CAN MASK REGISTER x HIGH (x = 0 TO 15)

U-0	R/W-0	R/W-0	R/W-0	R/W-0	R/W-0	R/W-0	R/W-0
—	MIDE	MSID11	MEID17	MEID16	MEID15	MEID14	MEID13
bit 15							bit 8

R/W-0	R/W-0	R/W-0	R/W-0	R/W-0	R/W-0	R/W-0	R/W-0
MEID12	MEID11	MEID10	MEID9	MEID8	MEID7	MEID6	MEID5
bit 7							bit 0

Legend:			
R = Readable bit	W = Writable bit	U = Unimplemented bit, read as ‘0’	
-n = Value at POR	‘1’ = Bit is set	‘0’ = Bit is cleared	x = Bit is unknown

bit 15 **Unimplemented:** Read as ‘0’

bit 14 **MIDE:** Identifier Receive Mode bit

1 = Matches only message types (standard or extended address) that correspond to the EXIDE bit in the filter

0 = Matches either standard or extended address message if filters match (i.e., if (Filter SID) = (Message SID) or if (Filter SID/EID) = (Message SID/EID))

bit 13 **MSID11:** Standard Identifier Mask bit

bit 12-0 **MEID<17:5>:** Extended Identifier Mask bits

In DeviceNet™ mode, these are the mask bits for the first two data bytes.

REGISTER 3-156: C1MASKxL: CAN MASK REGISTER x LOW (x = 0 TO 15)

R/W-0	R/W-0	R/W-0	R/W-0	R/W-0	R/W-0	R/W-0	R/W-0
MEID4	MEID3	MEID2	MEID1	MEID0	MSID10	MSID9	MSID8
bit 15							bit 8

R/W-0	R/W-0	R/W-0	R/W-0	R/W-0	R/W-0	R/W-0	R/W-0
MSID7	MSID6	MSID5	MSID4	MSID3	MSID2	MSID1	MSID0
bit 7							bit 0

Legend:			
R = Readable bit	W = Writable bit	U = Unimplemented bit, read as ‘0’	
-n = Value at POR	‘1’ = Bit is set	‘0’ = Bit is cleared	x = Bit is unknown

bit 15-11 **MEID<4:0>:** Extended Identifier Mask bits

In DeviceNet™ mode, these are the mask bits for the first two data bytes.

bit 10-0 **MSID<10:0>:** Standard Identifier Mask bits

© 2017-2018 Microchip Technology Inc.

3.9 High-Speed, 12-Bit Analog-to-Digital Converter (Master ADC)

Note 1: This data sheet summarizes the features of the dsPIC33CH128MP508 family of devices. It is not intended to be a comprehensive reference source. To complement the information in this data sheet, refer to **"12-Bit High-Speed, Multiple SARs A/D Converter (ADC)**" (DS70005213) in the *"dsPIC33/PIC24 Family Reference Manual"*, which is available from the Microchip web site (www.microchip.com).

2: This section describes the Master ADC module, which implements one shared core, and no dedicated cores.

dsPIC33CH128MP508 devices have a high-speed, 12-bit Analog-to-Digital Converter (ADC) that features a low conversion latency, high resolution and over-sampling capabilities to improve performance in AC/DC and DC/DC power converters. The Master implements one SAR core ADC.

3.9.1 MASTER ADC FEATURES OVERVIEW

The high-speed, 12-bit multiple SARs Analog-to-Digital Converter (ADC) includes the following features:

- One Shared (common) Core
- User-Configurable Resolution of up to 12 Bits
- Up to 3.5 Msps Conversion Rate per Channel at 12-Bit Resolution
- Low Latency Conversion
- Up to 20 Analog Input Channels, with a Separate 16-Bit Conversion Result Register for each Input Channel
- Conversion Result can be Formatted as Unsigned or Signed Data, on a per Channel Basis, for All Channels
- Channel Scan Capability
- Multiple Conversion Trigger Options, including:
  - PWM triggers from Master and Slave CPU cores
  - SCCP modules triggers
  - CLC modules triggers
  - External pin trigger event (ADTRG31)
  - Software trigger
- Four Integrated Digital Comparators with Dedicated Interrupts:
  - Multiple comparison options
  - Assignable to specific analog inputs
- Four Oversampling Filters with Dedicated Interrupts:
  - Provide increased resolution
  - Assignable to a specific analog input

Simplified block diagrams of the 12-bit ADC are shown in Figure 3-24 and Figure 3-25.

The analog inputs (channels) are connected through multiplexers and switches to the Sample-and-Hold (S&H) circuit of the ADC core. The core uses the channel information (the output format, the Measurement mode and the input number) to process the analog sample. When conversion is complete, the result is stored in the result buffer for the specific analog input, and passed to the digital filter and digital comparator if they were configured to use data from this particular channel.

The ADC provides each analog input the ability to specify its own trigger source. This capability allows the ADC to sample and convert analog inputs that are associated with PWM generators operating on independent time bases.

FIGURE 3-24: ADC MODULE BLOCK DIAGRAM

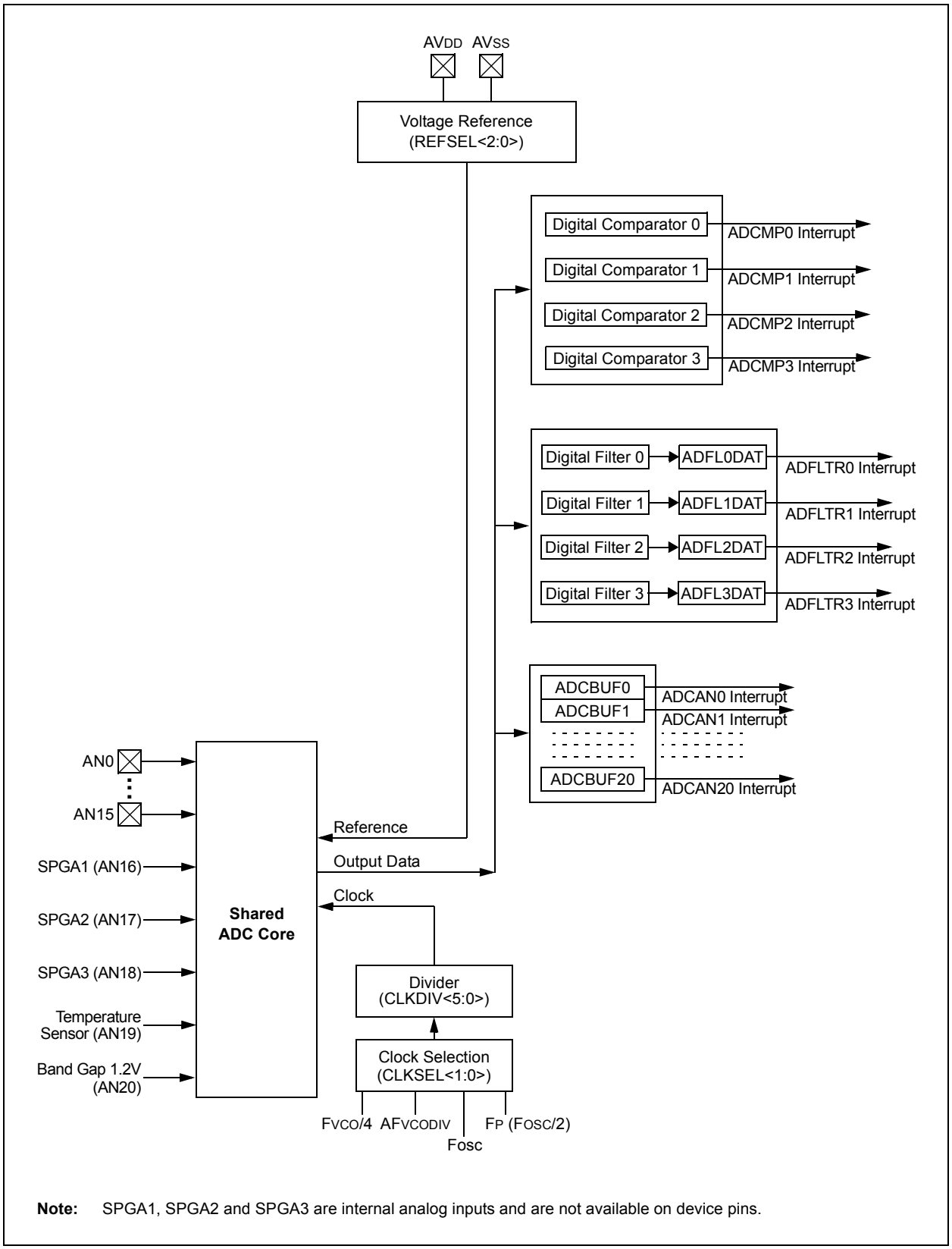

Note: SPGA1, SPGA2 and SPGA3 are internal analog inputs and are not available on device pins.

© 2017-2018 Microchip Technology Inc.

FIGURE 3-25: SHARED CORE BLOCK DIAGRAM

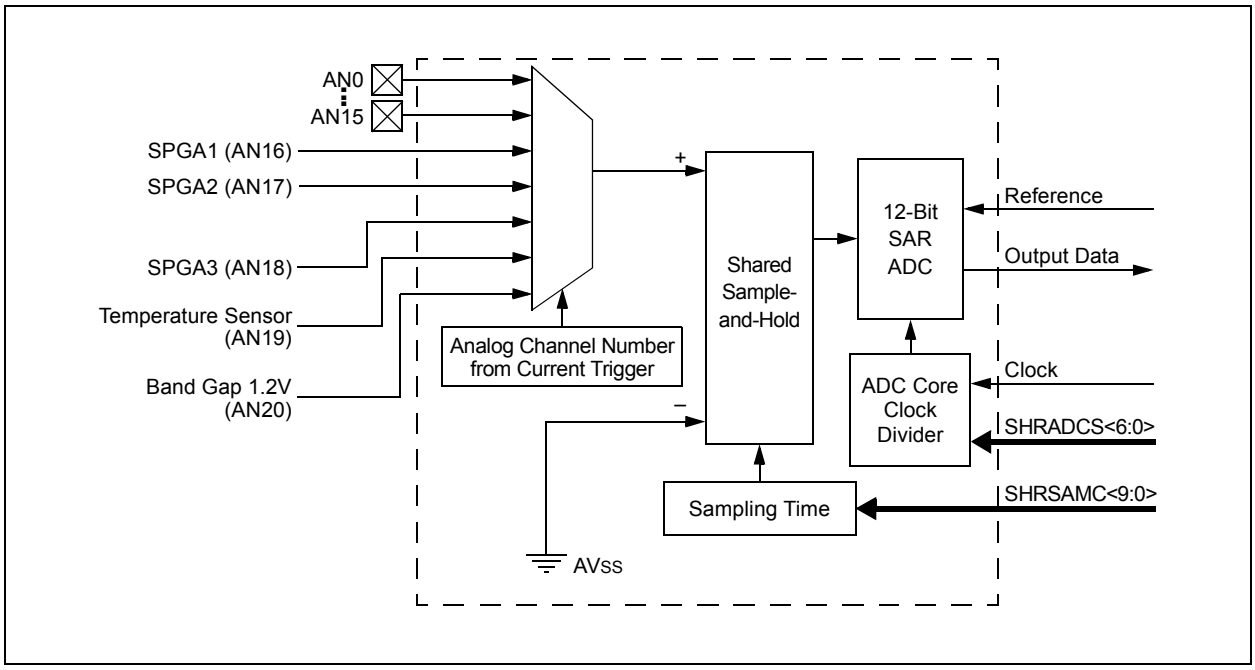

3.9.2 ANALOG-TO-DIGITAL CONVERTER RESOURCES

Many useful resources are provided on the main product page of the Microchip web site for the devices listed in this data sheet. This product page contains the latest updates and additional information.

3.9.2.1 Key Resources

- **"12-Bit High-Speed, Multiple SARs A/D Converter (ADC)"** (DS70005213) in the *"dsPIC33/PIC24 Family Reference Manual"*
- Code Samples
- Application Notes
- Software Libraries
- Webinars
- All Related *"dsPIC33/PIC24 Family Reference Manual"* Sections
- Development Tools

© 2017-2018 Microchip Technology Inc.

3.9.3 ADC CONTROL/STATUS REGISTERS

REGISTER 3-157: ADCON1L: ADC CONTROL REGISTER 1 LOW

R/W-0	U-0	R/W-0	U-0	U-0	U-0	U-0	U-0
ADON(1)	—	ADSIDL	—	—	—	—	—
bit 15							bit 8

U-0	U-0	U-0	U-0	U-0	U-0	U-0	U-0
—	—	—	—	—	—	—	—
bit 7							bit 0

Legend:			
R = Readable bit	W = Writable bit	U = Unimplemented bit, read as ‘0’	
-n = Value at POR	‘1’ = Bit is set	‘0’ = Bit is cleared	x = Bit is unknown

bit 15 **ADON:** ADC Enable bit(1)
`1` = ADC module is enabled
`0` = ADC module is off

bit 14 **Unimplemented:** Read as ‘`0`’

bit 13 **ADSIDL:** ADC Stop in Idle Mode bit
`1` = Discontinues module operation when device enters Idle mode
`0` = Continues module operation in Idle mode

bit 12-0 **Unimplemented:** Read as ‘`0`’

Note 1: Set the ADON bit only after the ADC module has been configured. Changing ADC Configuration bits when ADON = `1` will result in unpredictable behavior.

REGISTER 3-158: ADCON1H: ADC CONTROL REGISTER 1 HIGH

U-0	U-0	U-0	U-0	U-0	U-0	U-0	U-0
—	—	—	—	—	—	—	—
bit 15							bit 8

R/W-0	R/W-1	R/W-1	U-0	U-0	U-0	U-0	U-0
FORM	SHRRES1	SHRRES0	—	—	—	—	—
bit 7							bit 0

Legend:			
R = Readable bit	W = Writable bit	U = Unimplemented bit, read as ‘0’	
-n = Value at POR	‘1’ = Bit is set	‘0’ = Bit is cleared	x = Bit is unknown

bit 15-8 **Unimplemented:** Read as ‘0’

bit 7 **FORM:** Fractional Data Output Format bit
1 = Fractional
0 = Integer

bit 6-5 **SHRRES<1:0>:** Shared ADC Core Resolution Selection bits
11 = 12-bit resolution
10 = 10-bit resolution
01 = 8-bit resolution
00 = 6-bit resolution

bit 4-0 **Unimplemented:** Read as ‘0’

© 2017-2018 Microchip Technology Inc.

REGISTER 3-159: ADCON2L: ADC CONTROL REGISTER 2 LOW

R/W-0	R/W-0	U-0	R/W-0	U-0	R/W-0	R/W-0	R/W-0
REFCIE	REFERCIE	—	EIEN	—	SHREISEL2(1)	SHREISEL1(1)	SHREISEL0(1)
bit 15							bit 8

U-0	R/W-0	R/W-0	R/W-0	R/W-0	R/W-0	R/W-0	R/W-0
—	SHRADCS6	SHRADCS5	SHRADCS4	SHRADCS3	SHRADCS2	SHRADCS1	SHRADCS0
bit 7							bit 0

Legend:			
R = Readable bit	W = Writable bit	U = Unimplemented bit, read as ‘0’	
-n = Value at POR	‘1’ = Bit is set	‘0’ = Bit is cleared	x = Bit is unknown

bit 15 **REFCIE:** Band Gap and Reference Voltage Ready Common Interrupt Enable bit
1 = Common interrupt will be generated when the band gap becomes ready
0 = Common interrupt is disabled for the band gap ready event

bit 14 **REFERCIE:** Band Gap or Reference Voltage Error Common Interrupt Enable bit
1 = Common interrupt will be generated when a band gap or reference voltage error is detected
0 = Common interrupt is disabled for the band gap and reference voltage error event

bit 13 **Unimplemented:** Read as ‘0’

bit 12 **EIEN:** Early Interrupts Enable bit
1 = The early interrupt feature is enabled for the input channel interrupts (when the EISTATx flag is set)
0 = The individual interrupts are generated when conversion is done (when the ANxRDY flag is set)

bit 11 **Unimplemented:** Read as ‘0’

bit 10-8 **SHREISEL<2:0>:** Shared Core Early Interrupt Time Selection bits(1)
111 = Early interrupt is set and interrupt is generated 8 TADCORE clocks prior to when the data is ready
110 = Early interrupt is set and interrupt is generated 7 TADCORE clocks prior to when the data is ready
101 = Early interrupt is set and interrupt is generated 6 TADCORE clocks prior to when the data is ready
100 = Early interrupt is set and interrupt is generated 5 TADCORE clocks prior to when the data is ready
011 = Early interrupt is set and interrupt is generated 4 TADCORE clocks prior to when the data is ready
010 = Early interrupt is set and interrupt is generated 3 TADCORE clocks prior to when the data is ready
001 = Early interrupt is set and interrupt is generated 2 TADCORE clocks prior to when the data is ready
000 = Early interrupt is set and interrupt is generated 1 TADCORE clock prior to when the data is ready

bit 7 **Unimplemented:** Read as ‘0’

bit 6-0 **SHRADCS<6:0>:** Shared ADC Core Input Clock Divider bits
These bits determine the number of TCORESRC (Source Clock Periods) for one shared TADCORE (Core Clock Period).
1111111 = 254 Source Clock Periods
...
0000011 = 6 Source Clock Periods
0000010 = 4 Source Clock Periods
0000001 = 2 Source Clock Periods
0000000 = 2 Source Clock Periods

Note 1: For the 6-bit shared ADC core resolution (SHRRES<1:0> = 00), the SHREISEL<2:0> settings, from ‘100’ to ‘111’, are not valid and should not be used. For the 8-bit shared ADC core resolution (SHRRES<1:0> = 01), the SHREISEL<2:0> settings, ‘110’ and ‘111’, are not valid and should not be used.

REGISTER 3-160: ADCON2H: ADC CONTROL REGISTER 2 HIGH

HSC/R-0	HSC/R-0	U-0	U-0	U-0	U-0	R/W-0	R/W-0
REFRDY	REFERR	—	—	—	—	SHRSAMC9	SHRSAMC8
bit 15							bit 8

R/W-0	R/W-0	R/W-0	R/W-0	R/W-0	R/W-0	R/W-0	R/W-0
SHRSAMC7	SHRSAMC6	SHRSAMC5	SHRSAMC4	SHRSAMC3	SHRSAMC2	SHRSAMC1	SHRSAMC0
bit 7							bit 0

Legend:	U = Unimplemented bit, read as ‘0’		
R = Readable bit	W = Writable bit	HSC = Hardware Settable/Clearable bit	
-n = Value at POR	‘1’ = Bit is set	‘0’ = Bit is cleared	x = Bit is unknown

bit 15 **REFRDY:** Band Gap and Reference Voltage Ready Flag bit
`1` = Band gap is ready
`0` = Band gap is not ready

bit 14 **REFERR:** Band Gap or Reference Voltage Error Flag bit
`1` = Band gap was removed after the ADC module was enabled (ADON = `1`)
`0` = No band gap error was detected

bit 13-10 **Unimplemented:** Read as ‘`0`’

bit 9-0 **SHRSAMC<9:0>:** Shared ADC Core Sample Time Selection bits
These bits specify the number of shared ADC Core Clock Periods (T_{ADCORE}) for the shared ADC core sample time (Sample Time = (SHRSAMC<9:0> + 2) * T_{ADCORE}).
`1111111111` = 1025 T_{ADCORE}
`...`
`0000000001` = 3 T_{ADCORE}
`0000000000` = 2 T_{ADCORE}

© 2017-2018 Microchip Technology Inc.

REGISTER 3-161: ADCON3L: ADC CONTROL REGISTER 3 LOW

R/W-0	R/W-0	R/W-0	R/W-0	R/W-0	HSC/R-0	R/W-0	HSC/R-0
REFSEL2	REFSEL1	REFSEL0	SUSPEND	SUSPCIE	SUSPRDY	SHRSAMP	CNVRTCH
bit 15							bit 8

R/W-0	HSC/R-0	R/W-0	R/W-0	R/W-0	R/W-0	R/W-0	R/W-0
SWLCTRG	SWCTRG	CNVCHSEL5	CNVCHSEL4	CNVCHSEL3	CNVCHSEL2	CNVCHSEL1	CNVCHSEL0
bit 7							bit 0

Legend:	U = Unimplemented bit, read as ‘0’		
R = Readable bit	W = Writable bit	HSC = Hardware Settable/Clearable bit	
-n = Value at POR	‘1’ = Bit is set	‘0’ = Bit is cleared	x = Bit is unknown

bit 15-13 **REFSEL<2:0>:** ADC Reference Voltage Selection bits

Value	VREFH	VREFL
000	AVDD	AVSS

001-111 = **Unimplemented:** Do not use

bit 12 **SUSPEND:** All ADC Core Triggers Disable bit

1 = All new trigger events for all ADC cores are disabled
0 = All ADC cores can be triggered

bit 11 **SUSPCIE:** Suspend All ADC Cores Common Interrupt Enable bit

1 = Common interrupt will be generated when ADC core triggers are suspended (SUSPEND bit = 1) and all previous conversions are finished (SUSPRDY bit becomes set)
0 = Common interrupt is not generated for suspend ADC cores event

bit 10 **SUSPRDY:** All ADC Cores Suspended Flag bit

1 = ADC core is suspended (SUSPEND bit = 1) and has no conversions in progress
0 = ADC cores have previous conversions in progress

bit 9 **SHRSAMP:** Shared ADC Core Sampling Direct Control bit

This bit should be used with the individual channel conversion trigger controlled by the CNVRTCH bit. It connects an analog input, specified by the CNVCHSEL<5:0> bits, to the shared ADC core and allows extending the sampling time. This bit is not controlled by hardware and must be cleared before the conversion starts (setting CNVRTCH to ‘1’).

1 = Shared ADC core samples an analog input specified by the CNVCHSEL<5:0> bits
0 = Sampling is controlled by the shared ADC core hardware

bit 8 **CNVRTCH:** Software Individual Channel Conversion Trigger bit

1 = Single trigger is generated for an analog input specified by the CNVCHSEL<5:0> bits; when the bit is set, it is automatically cleared by hardware on the next instruction cycle
0 = Next individual channel conversion trigger can be generated

bit 7 **SWLCTRG:** Software Level-Sensitive Common Trigger bit

1 = Triggers are continuously generated for all channels with the software; level-sensitive common trigger selected as a source in the ADTRIGnL and ADTRIGnH registers
0 = No software, level-sensitive common triggers are generated

bit 6 **SWCTRG:** Software Common Trigger bit

1 = Single trigger is generated for all channels with the software; common trigger selected as a source in the ADTRIGnL and ADTRIGnH registers; when the bit is set, it is automatically cleared by hardware on the next instruction cycle
0 = Ready to generate the next software common trigger

bit 5-0 **CNVCHSEL <5:0>:** Channel Number Selection for Software Individual Channel Conversion Trigger bits

These bits define a channel to be converted when the CNVRTCH bit is set.

REGISTER 3-162: ADCON3H: ADC CONTROL REGISTER 3 HIGH

R/W-0	R/W-0	R/W-0	R/W-0	R/W-0	R/W-0	R/W-0	R/W-0
CLKSEL1	CLKSEL0	CLKDIV5	CLKDIV4	CLKDIV3	CLKDIV2	CLKDIV1	CLKDIV0
bit 15							bit 8

R/W-0	U-0	U-0	U-0	U-0	U-0	U-0	U-0
SHREN	—	—	—	—	—	—	—
bit 7							bit 0

Legend:			
R = Readable bit	W = Writable bit	U = Unimplemented bit, read as ‘0’	
-n = Value at POR	‘1’ = Bit is set	‘0’ = Bit is cleared	x = Bit is unknown

bit 15-14 **CLKSEL<1:0>:** ADC Module Clock Source Selection bits
`11` = $F_{VCO}/4$
`10` = AF_{VCODIV}
`01` = F_{OSC}
`00` = F_P ($F_{OSC}/2$)

bit 13-8 **CLKDIV<5:0>:** ADC Module Clock Source Divider bits
The divider forms a $T_{CORESRC}$ clock used by all ADC cores (shared and dedicated), from the T_{SRC} ADC module clock source, selected by the CLKSEL<1:0> bits. Then, each ADC core individually divides the $T_{CORESRC}$ clock to get a core-specific T_{ADCORE} clock using the ADCS<6:0> bits in the ADCOREXH register or the SHRADCS<6:0> bits in the ADCON2L register.
`111111` = 64 Source Clock Periods
`...`
`000011` = 4 Source Clock Periods
`000010` = 3 Source Clock Periods
`000001` = 2 Source Clock Periods
`000000` = 1 Source Clock Period

bit 7 **SHREN:** Shared ADC Core Enable bit
`1` = Shared ADC core is enabled
`0` = Shared ADC core is disabled

bit 6-0 **Unimplemented:** Read as ‘0’

© 2017-2018 Microchip Technology Inc.

REGISTER 3-163: ADCON5L: ADC CONTROL REGISTER 5 LOW

HSC/R-0	U-0	U-0	U-0	U-0	U-0	U-0	U-0
SHRRDY	—	—	—	—	—	—	—
bit 15							bit 8

R/W-0	U-0	U-0	U-0	U-0	U-0	U-0	U-0
SHRPWR	—	—	—	—	—	—	—
bit 7							bit 0

Legend:	U = Unimplemented bit, read as ‘0’		
R = Readable bit	W = Writable bit	HSC = Hardware Settable/Clearable bit	
-n = Value at POR	‘1’ = Bit is set	‘0’ = Bit is cleared	x = Bit is unknown

bit 15 **SHRRDY:** Shared ADC Core Ready Flag bit
`1` = ADC core is powered and ready for operation
`0` = ADC core is not ready for operation

bit 14-8 **Unimplemented:** Read as ‘`0`’

bit 7 **SHRPWR:** Shared ADC Core Power Enable bit
`1` = ADC core is powered
`0` = ADC core is off

bit 6-0 **Unimplemented:** Read as ‘`0`’

REGISTER 3-164: ADCON5H: ADC CONTROL REGISTER 5 HIGH

U-0	U-0	U-0	U-0	R/W-0	R/W-0	R/W-0	R/W-0
—	—	—	—	WARMTIME3	WARMTIME2	WARMTIME1	WARMTIME0
bit 15							bit 8

R/W-0	U-0	U-0	U-0	U-0	U-0	U-0	U-0
SHRCIE	—	—	—	—	—	—	—
bit 7							bit 0

Legend:			
R = Readable bit	W = Writable bit	U = Unimplemented bit, read as ‘0’	
-n = Value at POR	‘1’ = Bit is set	‘0’ = Bit is cleared	x = Bit is unknown

bit 15-12 **Unimplemented:** Read as ‘0’

bit 11-8 **WARMTIME<3:0>:** ADC Dedicated Core Power-up Delay bits

These bits determine the power-up delay in the number of the Core Source Clock Periods ($T_{CORESRC}$) for all ADC cores.

1111 = 32768 Source Clock Periods
1110 = 16384 Source Clock Periods
1101 = 8192 Source Clock Periods
1100 = 4096 Source Clock Periods
1011 = 2048 Source Clock Periods
1010 = 1024 Source Clock Periods
1001 = 512 Source Clock Periods
1000 = 256 Source Clock Periods
0111 = 128 Source Clock Periods
0110 = 64 Source Clock Periods
0101 = 32 Source Clock Periods
0100 = 16 Source Clock Periods
00xx = 16 Source Clock Periods

bit 7 **SHRCIE:** Shared ADC Core Ready Common Interrupt Enable bit

1 = Common interrupt will be generated when ADC core is powered and ready for operation
0 = Common interrupt is disabled for an ADC core ready event

bit 6-0 **Unimplemented:** Read as ‘0’

© 2017-2018 Microchip Technology Inc.

REGISTER 3-165: ADLVLTRGL: ADC LEVEL-SENSITIVE TRIGGER CONTROL REGISTER LOW

R/W-0	R/W-0	R/W-0	R/W-0	R/W-0	R/W-0	R/W-0	R/W-0
LVLEN<15:8>							
bit 15							bit 8

R/W-0	R/W-0	R/W-0	R/W-0	R/W-0	R/W-0	R/W-0	R/W-0
LVLEN<7:0>							
bit 7							bit 0

Legend:			
R = Readable bit	W = Writable bit	U = Unimplemented bit, read as ‘0’	
-n = Value at POR	‘1’ = Bit is set	‘0’ = Bit is cleared	x = Bit is unknown

bit 15-0 **LVLEN<15:0>:** Level Trigger for Corresponding Analog Input Enable bits
`1` = Input trigger is level-sensitive
`0` = Input trigger is edge-sensitive

REGISTER 3-166: ADLVLTRGH: ADC LEVEL-SENSITIVE TRIGGER CONTROL REGISTER HIGH

U-0	U-0	U-0	U-0	U-0	U-0	U-0	U-0
—	—	—	—	—	—	—	—
bit 15							bit 8

U-0	U-0	U-0	R/W-0	R/W-0	R/W-0	R/W-0	R/W-0
—	—	—	LVLEN<20:16>				
bit 7							bit 0

Legend:			
R = Readable bit	W = Writable bit	U = Unimplemented bit, read as ‘0’	
-n = Value at POR	‘1’ = Bit is set	‘0’ = Bit is cleared	x = Bit is unknown

bit 15-5 **Unimplemented:** Read as ‘`0`’
bit 4-0 **LVLEN<20:16>:** Level Trigger for Corresponding Analog Input Enable bits
`1` = Input trigger is level-sensitive
`0` = Input trigger is edge-sensitive

REGISTER 3-167: ADEIEL: ADC EARLY INTERRUPT ENABLE REGISTER LOW

R/W-0	R/W-0	R/W-0	R/W-0	R/W-0	R/W-0	R/W-0	R/W-0
EIEN<15:8>							
bit 15							bit 8

R/W-0	R/W-0	R/W-0	R/W-0	R/W-0	R/W-0	R/W-0	R/W-0
EIEN<7:0>							
bit 7							bit 0

Legend:			
R = Readable bit	W = Writable bit	U = Unimplemented bit, read as ‘0’	
-n = Value at POR	‘1’ = Bit is set	‘0’ = Bit is cleared	x = Bit is unknown

bit 15-0 **EIEN<15:0>:** Early Interrupt Enable for Corresponding Analog Input bits
`1` = Early interrupt is enabled for the channel
`0` = Early interrupt is disabled for the channel

REGISTER 3-168: ADEIEH: ADC EARLY INTERRUPT ENABLE REGISTER HIGH

U-0	U-0	U-0	U-0	U-0	U-0	U-0	U-0
—	—	—	—	—	—	—	—
bit 15							bit 8

U-0	U-0	U-0	R/W-0	R/W-0	R/W-0	R/W-0	R/W-0
—	—	—	EIEN<20:16>				
bit 7							bit 0

Legend:			
R = Readable bit	W = Writable bit	U = Unimplemented bit, read as ‘0’	
-n = Value at POR	‘1’ = Bit is set	‘0’ = Bit is cleared	x = Bit is unknown

bit 15-5 **Unimplemented:** Read as ‘`0`’
bit 4-0 **EIEN<20:16>:** Early Interrupt Enable for Corresponding Analog Input bits
`1` = Early interrupt is enabled for the channel
`0` = Early interrupt is disabled for the channel

© 2017-2018 Microchip Technology Inc.

REGISTER 3-169: ADEISTATL: ADC EARLY INTERRUPT STATUS REGISTER LOW

R/W-0	R/W-0	R/W-0	R/W-0	R/W-0	R/W-0	R/W-0	R/W-0
EISTAT<15:8>							
bit 15							bit 8

R/W-0	R/W-0	R/W-0	R/W-0	R/W-0	R/W-0	R/W-0	R/W-0
EISTAT<7:0>							
bit 7							bit 0

Legend:			
R = Readable bit	W = Writable bit	U = Unimplemented bit, read as ‘0’	
-n = Value at POR	‘1’ = Bit is set	‘0’ = Bit is cleared	x = Bit is unknown

bit 15-0 **EISTAT<15:0>:** Early Interrupt Status for Corresponding Analog Input bits
`1` = Early interrupt was generated
`0` = Early interrupt was not generated since the last ADCBUFx read

REGISTER 3-170: ADEISTATH: ADC EARLY INTERRUPT STATUS REGISTER HIGH

U-0	U-0	U-0	U-0	U-0	U-0	U-0	U-0
—	—	—	—	—	—	—	—
bit 15							bit 8

U-0	U-0	U-0	R/W-0	R/W-0	R/W-0	R/W-0	R/W-0
—	—	—	EISTAT<20:16>				
bit 7							bit 0

Legend:			
R = Readable bit	W = Writable bit	U = Unimplemented bit, read as ‘0’	
-n = Value at POR	‘1’ = Bit is set	‘0’ = Bit is cleared	x = Bit is unknown

bit 15-5 **Unimplemented:** Read as ‘`0`’
bit 4-0 **EISTAT<20:16>:** Early Interrupt Status for Corresponding Analog Input bits
`1` = Early interrupt was generated
`0` = Early interrupt was not generated since the last ADCBUFx read

REGISTER 3-171: ADMOD0L: ADC INPUT MODE CONTROL REGISTER 0 LOW

U-0	R/W-0	U-0	R/W-0	U-0	R/W-0	U-0	R/W-0
—	SIGN7	—	SIGN6	—	SIGN5	—	SIGN4
bit 15							bit 8

U-0	R/W-0	U-0	R/W-0	U-0	R/W-0	U-0	R/W-0
—	SIGN3	—	SIGN2	—	SIGN1	—	SIGN0
bit 7							bit 0

Legend:			
R = Readable bit	W = Writable bit	U = Unimplemented bit, read as ‘0’	
-n = Value at POR	‘1’ = Bit is set	‘0’ = Bit is cleared	x = Bit is unknown

bit 15-1 (odd) **Unimplemented:** Read as ‘0’

bit 14-0 (even) **SIGN<7:0>:** Output Data Sign for Corresponding Analog Input bits
1 = Channel output data is signed
0 = Channel output data is unsigned

REGISTER 3-172: ADMOD0H: ADC INPUT MODE CONTROL REGISTER 0 HIGH

U-0	R/W-0	U-0	R/W-0	U-0	R/W-0	U-0	R/W-0
—	SIGN15	—	SIGN14	—	SIGN13	—	SIGN12
bit 15							bit 8

U-0	R/W-0	U-0	R/W-0	U-0	R/W-0	U-0	R/W-0
—	SIGN11	—	SIGN10	—	SIGN9	—	SIGN8
bit 7							bit 0

Legend:			
R = Readable bit	W = Writable bit	U = Unimplemented bit, read as ‘0’	
-n = Value at POR	‘1’ = Bit is set	‘0’ = Bit is cleared	x = Bit is unknown

bit 15-1 (odd) **Unimplemented:** Read as ‘0’

bit 14-0 (even) **SIGN<15:8>:** Output Data Sign for Corresponding Analog Input bits
1 = Channel output data is signed
0 = Channel output data is unsigned

© 2017-2018 Microchip Technology Inc.

REGISTER 3-173: ADMOD1L: ADC INPUT MODE CONTROL REGISTER 1 LOW

U-0	U-0	U-0	U-0	U-0	U-0	U-0	R/W-0
—	—	—	—	—	—	—	SIGN20
bit 15							bit 8

U-0	R/W-0	U-0	R/W-0	U-0	R/W-0	U-0	R/W-0
—	SIGN19	—	SIGN18	—	SIGN17	—	SIGN16
bit 7							bit 0

Legend:			
R = Readable bit	W = Writable bit	U = Unimplemented bit, read as ‘0’	
-n = Value at POR	‘1’ = Bit is set	‘0’ = Bit is cleared	x = Bit is unknown

bit 15-9 **Unimplemented:** Read as ‘0’

bit 8 **SIGN20:** Output Data Sign for Corresponding Analog Input bits
1 = Channel output data is signed
0 = Channel output data is unsigned

bit 7 **Unimplemented:** Read as ‘0’

bit 6 **SIGN19:** Output Data Sign for Corresponding Analog Input bits
1 = Channel output data is signed
0 = Channel output data is unsigned

bit 5 **Unimplemented:** Read as ‘0’

bit 4 **SIGN18:** Output Data Sign for Corresponding Analog Input bits
1 = Channel output data is signed
0 = Channel output data is unsigned

bit 3 **Unimplemented:** Read as ‘0’

bit 2 **SIGN17:** Output Data Sign for Corresponding Analog Input bits
1 = Channel output data is signed
0 = Channel output data is unsigned

bit 1 **Unimplemented:** Read as ‘0’

bit 0 **SIGN16:** Output Data Sign for Corresponding Analog Input bits
1 = Channel output data is signed
0 = Channel output data is unsigned

REGISTER 3-174: ADIEL: ADC INTERRUPT ENABLE REGISTER LOW

R/W-0	R/W-0	R/W-0	R/W-0	R/W-0	R/W-0	R/W-0	R/W-0
IE<15:8>							
bit 15							bit 8

R/W-0	R/W-0	R/W-0	R/W-0	R/W-0	R/W-0	R/W-0	R/W-0
IE<7:0>							
bit 7							bit 0

Legend:			
R = Readable bit	W = Writable bit	U = Unimplemented bit, read as ‘0’	
-n = Value at POR	‘1’ = Bit is set	‘0’ = Bit is cleared	x = Bit is unknown

bit 15-0 **IE<15:0>:** Common Interrupt Enable bits
`1` = Common and individual interrupts are enabled for the corresponding channel
`0` = Common and individual interrupts are disabled for the corresponding channel

REGISTER 3-175: ADIEH: ADC INTERRUPT ENABLE REGISTER HIGH

U-0	U-0	U-0	U-0	U-0	U-0	U-0	U-0
—	—	—	—	—	—	—	—
bit 15							bit 8

U-0	U-0	U-0	R/W-0	R/W-0	R/W-0	R/W-0	R/W-0
—	—	—	IE<20:16>				
bit 7							bit 0

Legend:			
R = Readable bit	W = Writable bit	U = Unimplemented bit, read as ‘0’	
-n = Value at POR	‘1’ = Bit is set	‘0’ = Bit is cleared	x = Bit is unknown

bit 15-5 **Unimplemented:** Read as ‘`0`’
bit 4-0 **IE<20:16>:** Common Interrupt Enable bits
`1` = Common and individual interrupts are enabled for the corresponding channel
`0` = Common and individual interrupts are disabled for the corresponding channel

© 2017-2018 Microchip Technology Inc.

REGISTER 3-176: ADSTATL: ADC DATA READY STATUS REGISTER LOW

HSC/R-0	HSC/R-0	HSC/R-0	HSC/R-0	HSC/R-0	HSC/R-0	HSC/R-0	HSC/R-0
AN<15:8>RDY							
bit 15							bit 8

HSC/R-0	HSC/R-0	HSC/R-0	HSC/R-0	HSC/R-0	HSC/R-0	HSC/R-0	HSC/R-0
AN<7:0>RDY							
bit 7							bit 0

Legend:	U = Unimplemented bit, read as ‘0’		
R = Readable bit	W = Writable bit	HSC = Hardware Settable/Clearable bit	
-n = Value at POR	‘1’ = Bit is set	‘0’ = Bit is cleared	x = Bit is unknown

bit 15-0 **AN<15:0>RDY:** Common Interrupt Enable for Corresponding Analog Input bits
`1` = Channel conversion result is ready in the corresponding ADCBUFx register
`0` = Channel conversion result is not ready

REGISTER 3-177: ADSTATH: ADC DATA READY STATUS REGISTER HIGH

U-0	U-0	U-0	U-0	U-0	U-0	U-0	U-0
—	—	—	—	—	—	—	—
bit 15							bit 8

U-0	U-0	U-0	HSC/R-0	HSC/R-0	HSC/R-0	HSC/R-0	HSC/R-0
—	—	—	AN<20:16>RDY				
bit 7							bit 0

Legend:	U = Unimplemented bit, read as ‘0’		
R = Readable bit	W = Writable bit	HSC = Hardware Settable/Clearable bit	
-n = Value at POR	‘1’ = Bit is set	‘0’ = Bit is cleared	x = Bit is unknown

bit 15-5 **Unimplemented:** Read as ‘`0`’
bit 4-0 **AN<20:16>RDY:** Common Interrupt Enable for Corresponding Analog Input bits
`1` = Channel conversion result is ready in the corresponding ADCBUFx register
`0` = Channel conversion result is not ready

REGISTER 3-178: ADTRIGnL AND ADTRIGnH: ADC CHANNEL TRIGGER n(x) SELECTION REGISTERS LOW AND HIGH (x = 0 TO 19; n = 0 TO 4)

U-0	U-0	U-0	R/W-0	R/W-0	R/W-0	R/W-0	R/W-0
—	—	—	TRGSRC(x+1)4	TRGSRC(x+1)3	TRGSRC(x+1)2	TRGSRC(x+1)1	TRGSRC(x+1)0
bit 15							bit 8

U-0	U-0	U-0	R/W-0	R/W-0	R/W-0	R/W-0	R/W-0
—	—	—	TRGSRCx4	TRGSRCx3	TRGSRCx2	TRGSRCx1	TRGSRCx0
bit 7							bit 0

Legend:			
R = Readable bit	W = Writable bit	U = Unimplemented bit, read as ‘0’	
-n = Value at POR	‘1’ = Bit is set	‘0’ = Bit is cleared	x = Bit is unknown

bit 15-13 **Unimplemented:** Read as ‘0’

bit 12-8 **TRGSRC(x+1)<4:0>:** Trigger Source Selection for Corresponding Analog Input bits (TRGSRC1 to TRGSRC19 – Odd)

11111 = ADTRG31 (PPS input)
11110 = Master PTG
11101 = Slave CLC1
11100 = Master CLC1
11011 = Slave PWM8 Trigger 2
11010 = Slave PWM5 Trigger 2
11001 = Slave PWM3 Trigger 2
11000 = Slave PWM1 Trigger 2
10111 = Master SCCP4 PWM interrupt
10110 = Master SCCP3 PWM interrupt
10101 = Master SCCP2 PWM interrupt
10100 = Master SCCP1 PWM interrupt
10011 = Reserved
10010 = Reserved
10001 = Reserved
10000 = Reserved
01111 = Reserved
01110 = Reserved
01101 = Reserved
01100 = Reserved
01011 = Master PWM4 Trigger 2
01010 = Master PWM4 Trigger 1
01001 = Master PWM3 Trigger 2
01000 = Master PWM3 Trigger 1
00111 = Master PWM2 Trigger 2
00110 = Master PWM2 Trigger 1
00101 = Master PWM1 Trigger 2
00100 = Master PWM1 Trigger 1
00011 = Reserved
00010 = Level software trigger
00001 = Common software trigger
00000 = No trigger is enabled

bit 7-5 **Unimplemented:** Read as ‘0’

© 2017-2018 Microchip Technology Inc.

REGISTER 3-178: ADTRIGnL AND ADTRIGnH: ADC CHANNEL TRIGGER n(x) SELECTION REGISTERS LOW AND HIGH (x = 0 TO 19; n = 0 TO 4) (CONTINUED)

bit 4-0 **TRGSRCx<4:0>:** Common Interrupt Enable for Corresponding Analog Input bits (TRGSRCx0 to TRGSRCx20 – Even)

`11111` = ADTRG31 (PPS input)
`11110` = Master PTG
`11101` = Slave CLC1
`11100` = Master CLC1
`11011` = Slave PWM8 Trigger 2
`11010` = Slave PWM5 Trigger 2
`11001` = Slave PWM3 Trigger 2
`11000` = Slave PWM1 Trigger 2
`10111` = Master SCCP4 PWM interrupt
`10110` = Master SCCP3 PWM interrupt
`10101` = Master SCCP2 PWM interrupt
`10100` = Master SCCP2 PWM interrupt
`10011` = Reserved
`10010` = Reserved
`10001` = Reserved
`10000` = Reserved
`01111` = Reserved
`01110` = Reserved
`01101` = Reserved
`01100` = Reserved
`01011` = Master PWM4 Trigger 2
`01010` = Master PWM4 Trigger 1
`01001` = Master PWM3 Trigger 2
`01000` = Master PWM3 Trigger 1
`00111` = Master PWM2 Trigger 2
`00110` = Master PWM2 Trigger 1
`00101` = Master PWM1 Trigger 2
`00100` = Master PWM1 Trigger 1
`00011` = Reserved
`00010` = Level software trigger
`00001` = Common software trigger
`00000` = No trigger is enabled

REGISTER 3-179: ADCMPxCON: ADC DIGITAL COMPARATOR x CONTROL REGISTER (x = 0, 1, 2, 3)

U-0	U-0	U-0	HSC/R-0	HSC/R-0	HSC/R-0	HSC/R-0	HSC/R-0
—	—	—	CHNL4	CHNL3	CHNL2	CHNL1	CHNL0
bit 15							bit 8

R/W-0	R/W-0	HC/HS/R-0	R/W-0	R/W-0	R/W-0	R/W-0	R/W-0
CMPEN	IE	STAT	BTWN	HIHI	HILO	LOHI	LOLO
bit 7							bit 0

Legend:	HC = Hardware Clearable bit	U = Unimplemented bit, read as ‘0’	
R = Readable bit	W = Writable bit	HSC = Hardware Settable/Clearable bit	
-n = Value at POR	‘1’ = Bit is set	‘0’ = Bit is cleared	HS = Hardware Settable bit

bit 15-13 **Unimplemented:** Read as ‘0’

bit 12-8 **CHNL<4:0>:** Input Channel Number bits
11111 = Reserved
...
10101 = Reserved
10100 = Band gap, 1.2V (AN20)
10011 = Temperature sensor (AN19)
10010 = SPGA3 (AN18)
10001 = SPGA2 (AN17)
10000 = SPGA1 (AN16)
01111 = AN15
...
00000 = AN0

bit 7 **CMPEN:** Comparator Enable bit
1 = Comparator is enabled
0 = Comparator is disabled and the STAT status bit is cleared

bit 6 **IE:** Comparator Common ADC Interrupt Enable bit
1 = Common ADC interrupt will be generated if the comparator detects a comparison event
0 = Common ADC interrupt will not be generated for the comparator

bit 5 **STAT:** Comparator Event Status bit
This bit is cleared by hardware when the channel number is read from the CHNL<4:0> bits.
1 = A comparison event has been detected since the last read of the CHNL<4:0> bits
0 = A comparison event has not been detected since the last read of the CHNL<4:0> bits

bit 4 **BTWN:** Between Low/High Comparator Event bit
1 = Generates a comparator event when ADCMPxLO ≤ ADCBUFx < ADCMPxHI
0 = Does not generate a digital comparator event when ADCMPxLO ≤ ADCBUFx < ADCMPxHI

bit 3 **HIHI:** High/High Comparator Event bit
1 = Generates a digital comparator event when ADCBUFx ≥ ADCMPxHI
0 = Does not generate a digital comparator event when ADCBUFx ≥ ADCMPxHI

bit 2 **HILO:** High/Low Comparator Event bit
1 = Generates a digital comparator event when ADCBUFx < ADCMPxHI
0 = Does not generate a digital comparator event when ADCBUFx < ADCMPxHI

bit 1 **LOHI:** Low/High Comparator Event bit
1 = Generates a digital comparator event when ADCBUFx ≥ ADCMPxLO
0 = Does not generate a digital comparator event when ADCBUFx ≥ ADCMPxLO

bit 0 **LOLO:** Low/Low Comparator Event bit
1 = Generates a digital comparator event when ADCBUFx < ADCMPxLO
0 = Does not generate a digital comparator event when ADCBUFx < ADCMPxLO

© 2017-2018 Microchip Technology Inc.

REGISTER 3-180: ADCMPxENL: ADC DIGITAL COMPARATOR x CHANNEL ENABLE REGISTER LOW (x = 0, 1, 2, 3)

R/W-0	R/W-0	R/W-0	R/W-0	R/W-0	R/W-0	R/W-0	R/W-0
CMPEN<15:8>							
bit 15							bit 8

R/W/0	R/W-0	R/W-0	R/W-0	R/W-0	R/W-0	R/W-0	R/W-0
CMPEN<7:0>							
bit 7							bit 0

Legend:			
R = Readable bit	W = Writable bit	U = Unimplemented bit, read as ‘0’	
-n = Value at POR	‘1’ = Bit is set	‘0’ = Bit is cleared	x = Bit is unknown

bit 15-0 **CMPEN<15:0>:** Comparator Enable for Corresponding Input Channel bits
`1` = Conversion result for corresponding channel is used by the comparator
`0` = Conversion result for corresponding channel is not used by the comparator

REGISTER 3-181: ADCMPxENH: ADC DIGITAL COMPARATOR x CHANNEL ENABLE REGISTER HIGH (x = 0, 1, 2, 3)

U-0	U-0	U-0	U-0	U-0	U-0	U-0	R/W-0
—	—	—	—	—	—	—	—
bit 15							bit 8

U-0	U-0	U-0	R/W-0	R/W-0	R/W-0	R/W-0	R/W-0
—	—	—	CMPEN<20:16>				
bit 7							bit 0

Legend:			
R = Readable bit	W = Writable bit	U = Unimplemented bit, read as ‘0’	
-n = Value at POR	‘1’ = Bit is set	‘0’ = Bit is cleared	x = Bit is unknown

bit 15-5 **Unimplemented:** Read as ‘`0`’
bit 4-0 **CMPEN<20:16>:** Comparator Enable for Corresponding Input Channel bits
`1` = Conversion result for corresponding channel is used by the comparator
`0` = Conversion result for corresponding channel is not used by the comparator

REGISTER 3-182: ADFLxCON: ADC DIGITAL FILTER x CONTROL REGISTER (x = 0, 1, 2, 3)

R/W-0	R/W-0	R/W-0	R/W-0	R/W-0	R/W-0	R/W-0	R-0, HSC
FLEN	MODE1	MODE0	OVRSAM2	OVRSAM1	OVRSAM0	IE	RDY
bit 15							bit 8

U-0	U-0	U-0	R/W-0	R/W-0	R/W-0	R/W-0	R/W-0
—	—	—	FLCHSEL4	FLCHSEL3	FLCHSEL2	FLCHSEL1	FLCHSEL0
bit 7							bit 0

Legend:	U = Unimplemented bit, read as ‘0’		
R = Readable bit	W = Writable bit	HSC = Hardware Settable/Clearable bit	
-n = Value at POR	‘1’ = Bit is set	‘0’ = Bit is cleared	x = Bit is unknown

bit 15 **FLEN:** Filter Enable bit
1 = Filter is enabled
0 = Filter is disabled and the RDY bit is cleared

bit 14-13 **MODE<1:0>:** Filter Mode bits
11 = Averaging mode
10 = Reserved
01 = Reserved
00 = Oversampling mode

bit 12-10 **OVRSAM<2:0>:** Filter Averaging/Oversampling Ratio bits
If MODE<1:0> = 00:
111 = 128x (16-bit result in the ADFLxDAT register is in 12.4 format)
110 = 32x (15-bit result in the ADFLxDAT register is in 12.3 format)
101 = 8x (14-bit result in the ADFLxDAT register is in 12.2 format)
100 = 2x (13-bit result in the ADFLxDAT register is in 12.1 format)
011 = 256x (16-bit result in the ADFLxDAT register is in 12.4 format)
010 = 64x (15-bit result in the ADFLxDAT register is in 12.3 format)
001 = 16x (14-bit result in the ADFLxDAT register is in 12.2 format)
000 = 4x (13-bit result in the ADFLxDAT register is in 12.1 format)
If MODE<1:0> = 11 (12-bit result in the ADFLxDAT register in all instances):
111 = 256x
110 = 128x
101 = 64x
100 = 32x
011 = 16x
110 = 8x
001 = 4x
000 = 2x

bit 9 **IE:** Filter Common ADC Interrupt Enable bit
1 = Common ADC interrupt will be generated when the filter result will be ready
0 = Common ADC interrupt will not be generated for the filter

bit 8 **RDY:** Oversampling Filter Data Ready Flag bit
This bit is cleared by hardware when the result is read from the ADFLxDAT register.
1 = Data in the ADFLxDAT register is ready
0 = The ADFLxDAT register has been read and new data in the ADFLxDAT register is not ready

bit 7-5 **Unimplemented:** Read as ‘0’

© 2017-2018 Microchip Technology Inc.

REGISTER 3-182: ADFLxCON: ADC DIGITAL FILTER x CONTROL REGISTER (x = 0, 1, 2, 3) (CONTINUED)

bit 4-0 **FLCHSEL<4:0>:** Oversampling Filter Input Channel Selection bits

`11111` = Reserved
`...`
`10101` = Reserved
`10100` = Band gap, 1.2V (AN20)
`10011` = Temperature sensor (AN19)
`10010` = SPGA3 (AN18)
`10001` = SPGA2 (AN17)
`10000` = SPGA1 (AN16)
`01111` = AN15
`...`
`00000` = AN0

3.10 Peripheral Trigger Generator (PTG)

Note 1: This data sheet summarizes the features of the dsPIC33CH128MP508 family of devices. It is not intended to be a comprehensive reference source. To complement the information in this data sheet, refer to **"Peripheral Trigger Generator (PTG)"** (DS70000669) in the *"dsPIC33/PIC24 Family Reference Manual"*, which is available from the Microchip web site (www.microchip.com)

Table 3-43 shows an overview of the PTG module.

TABLE 3-43: PTG MODULE OVERVIEW

	No. of PTG Modules	Identical (Modules)
Master	1	NA
Slave	None	NA

The dsPIC33CH128MP508 family Peripheral Trigger Generator (PTG) module is a user-programmable sequencer that is capable of generating complex trigger signal sequences to coordinate the operation of other peripherals. The PTG module is designed to interface with the modules, such as an Analog-to-Digital Converter (ADC), output compare and PWM modules, timers and interrupt controllers.

3.10.1 FEATURES

- Behavior is Step Command-Driven:
  - Step commands are eight bits wide
- Commands are Stored in a Step Queue:
  - Queue depth is parameterized (8-32 entries)
  - Programmable Step execution time (Step delay)
- Supports the Command Sequence Loop:
  - Can be nested one-level deep
  - Conditional or unconditional loop
  - Two 16-bit loop counters
- 16 Hardware Input Triggers:
  - Sensitive to either positive or negative edges, or a high or low level
- One Software Input Trigger
- Generates up to 32 Unique Output Trigger Signals
- Generates Two Types of Trigger Outputs:
  - Individual
  - Broadcast
- Strobed Output Port for Literal Data Values:
  - 5-bit literal write (literal part of a command)
  - 16-bit literal write (literal held in the PTGL0 register)
- Generates up to Ten Unique Interrupt Signals
- Two 16-Bit General Purpose Timers
- Flexible Self-Contained Watchdog Timer (WDT) to Set an Upper Limit to Trigger Wait Time
- Single-Step Command Capability in Debug mode
- Selectable Clock (system, Pulse-Width Modulator (PWM) or ADC)
- Programmable Clock Divider

© 2017-2018 Microchip Technology Inc.

FIGURE 3-26: PTG BLOCK DIAGRAM

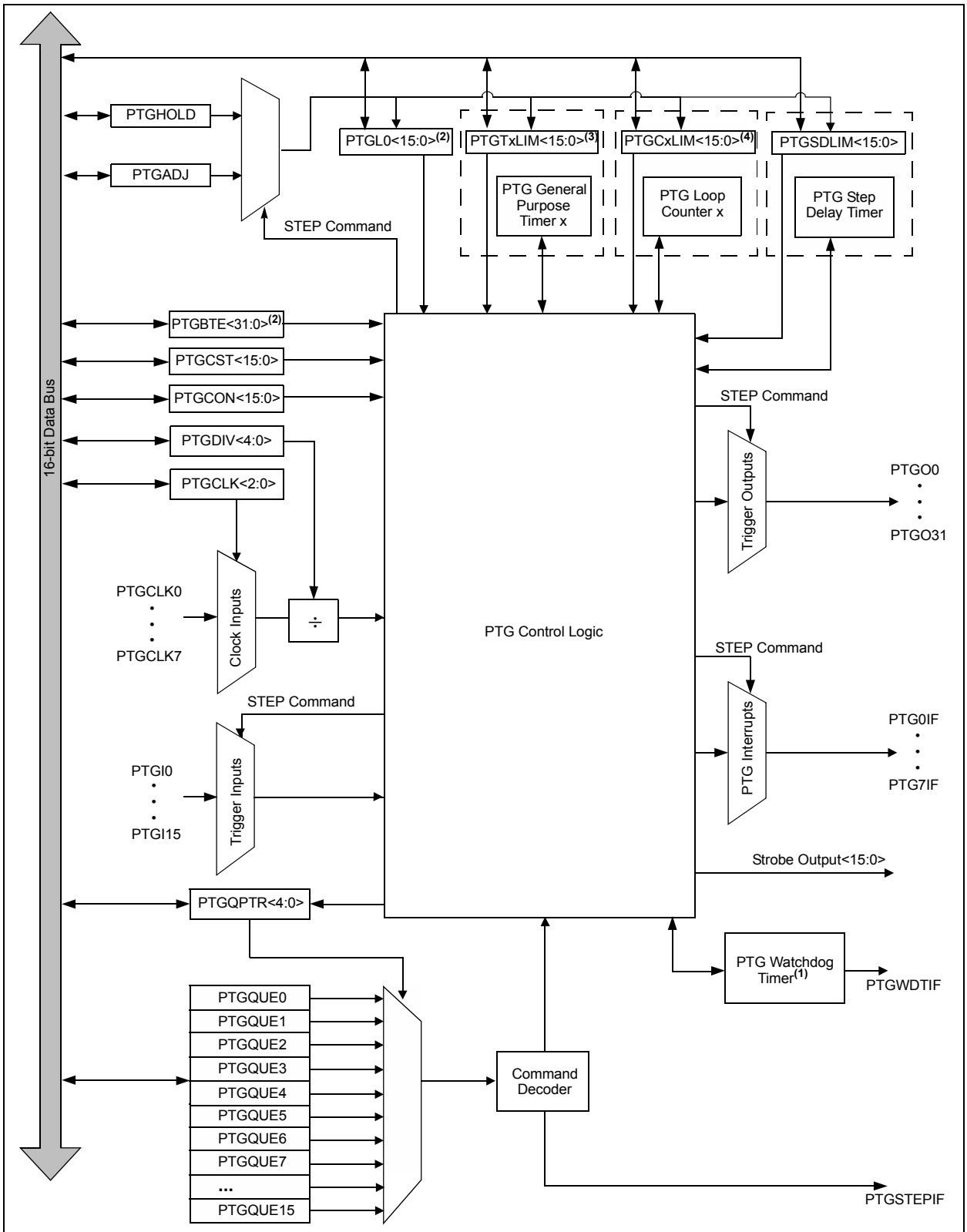

Note 1: This is a dedicated Watchdog Timer for the PTG module and is independent of the device Watchdog Timer.
2: See Figure 4-11.
3: See Figure 4-9.
4: See Figure 4-2.

3.10.2 PTG CONTROL/STATUS REGISTERS

REGISTER 3-183: PTGCST: PTG CONTROL/STATUS LOW REGISTER

R/W-0	U-0	R/W-0	R/W-0	U-0	HC/R/W-0	R/W-0	R/W-0
PTGEN	—	PTGSIDL	PTGTOGL	—	PTGSWT(2)	PTGSSEN(3)	PTGIVIS
bit 15							bit 8

HC/R/W-0	HS/R/W-0	HS/HC/R/W-0	U-0	U-0	U-0	R/W-0	R/W-0
PTGSTRT	PTGWDTO	PTGBUSY	—	—	—	PTGITM1(1)	PTGITM0(1)
bit 7							bit 0

Legend:	HC = Hardware Clearable bit	HS = Hardware Settable bit	
R = Readable bit	W = Writable bit	U = Unimplemented bit, read as ‘0’	
-n = Value at POR	‘1’ = Bit is set	‘0’ = Bit is cleared	x = Bit is unknown

bit 15 **PTGEN:** PTG Enable bit
`1` = PTG is enabled
`0` = PTG is disabled

bit 14 **Unimplemented:** Read as ‘`0`’

bit 13 **PTGSIDL:** PTG Freeze in Debug Mode bit
`1` = Halts PTG operation when device is Idle
`0` = PTG operation continues when device is Idle

bit 12 **PTGTOGL:** PTG Toggle Trigger Output bit
`1` = Toggles state of TRIG output for each execution of `PTGTRIG`
`0` = Generates a single TRIG pulse for each execution of `PTGTRIG`

bit 11 **Unimplemented:** Read as ‘`0`’

bit 10 **PTGSWT:** PTG Software Trigger bit(2)
`1` = Toggles state of TRIG output for each execution of `PTGTRIG`
`0` = Generates a single TRIG pulse for each execution of `PTGTRIG`

bit 9 **PTGSSEN:** PTG Single-Step Command bit(3)
`1` = Enables single step when in Debug mode
`0` = Disables single step

bit 8 **PTGIVIS:** PTG Counter/Timer Visibility bit
`1` = Reading the PTGSDLIM, PTGCxLIM or PTGTxLIM registers returns the current values of their corresponding Counter/Timer registers (PTGSDLIM, PTGCxLIM and PTGTxLIM)
`0` = Reading the PTGSDLIM, PTGCxLIM or PTGTxLIM registers returns the value of these Limit registers

bit 7 **PTGSTRT:** PTG Start Sequencer bit
`1` = Starts to sequentially execute the commands (Continuous mode)
`0` = Stops executing the commands

bit 6 **PTGWDTO:** PTG Watchdog Timer Time-out Status bit
`1` = PTG Watchdog Timer has timed out
`0` = PTG Watchdog Timer has not timed out

bit 5 **PTGBUSY:** PTG State Machine Busy bit
`1` = PTG is running on the selected clock source; no SFR writes are allowed to PTGCLK<2:0> or PTGDIV<4:0>
`0` = PTG state machine is not running

bit 4-2 **Unimplemented:** Read as ‘`0`’

Note 1: These bits apply to the `PTGWHI` and `PTGWLO` commands only.
2: This bit is only used with the `PTGCTRL` Step command software trigger option.
3: The PTGSSEN bit may only be written when in Debug mode.

© 2017-2018 Microchip Technology Inc.

REGISTER 3-183: PTGCST: PTG CONTROL/STATUS LOW REGISTER (CONTINUED)

bit 1-0 **PTGITM<1:0>:** PTG Input Trigger Operation Selection bit[1]

`11` = Single-level detect with Step delay not executed on exit of command (regardless of the `PTGCTRL` command) (Mode 3)

`10` = Single-level detect with Step delay executed on exit of command (Mode 2)

`01` = Continuous edge detect with Step delay not executed on exit of command (regardless of the `PTGCTRL` command) (Mode 1)

`00` = Continuous edge detect with Step delay executed on exit of command (Mode 0)

Note 1: These bits apply to the `PTGWHI` and `PTGWLO` commands only.

2: This bit is only used with the `PTGCTRL` Step command software trigger option.

3: The PTGSSEN bit may only be written when in Debug mode.

REGISTER 3-184: PTGCON: PTG CONTROL/STATUS HIGH REGISTER

R/W-0	R/W-0	R/W-0	R/W-0	R/W-0	R/W-0	R/W-0	R/W-0
PTGCLK2	PTGCLK1	PTGCLK0	PTGDIV4	PTGDIV3	PTGDIV2	PTGDIV1	PTGDIV0
bit 15							bit 8

R/W-0	R/W-0	R/W-0	R/W-0	U-0	R/W-0	R/W-0	R/W-0
PTGPWD3	PTGPWD2	PTGPWD1	PTGPWD0	—	PTGWDT2	PTGWDT1	PTGWDT0
bit 7							bit 0

Legend:			
R = Readable bit	W = Writable bit	U = Unimplemented bit, read as ‘0’	
-n = Value at POR	‘1’ = Bit is set	‘0’ = Bit is cleared	x = Bit is unknown

bit 15-13 **PTGCLK<2:0>:** PTG Module Clock Source Selection bits
`111` = Reserved
`110` = PLL VCO DIV 4 output
`101` = PTG module clock source will be SCCP7
`100` = PTG module clock source will be SCCP8
`011` = Input from Timer1 Clock pin, T1CK
`010` = PTG module clock source will be ADC clock
`001` = PTG module clock source will be FOSC
`000` = PTG module clock source will be FOSC/2 (FP)

bit 12-8 **PTGDIV<4:0>:** PTG Module Clock Prescaler (Divider) bits
`11111` = Divide-by-32
`11110` = Divide-by-31
`...`
`00001` = Divide-by-2
`00000` = Divide-by-1

bit 7-4 **PTGPWD<3:0>:** PTG Trigger Output Pulse-Width (in PTG clock cycles) bits
`1111` = All trigger outputs are 16 PTG clock cycles wide
`1110` = All trigger outputs are 15 PTG clock cycles wide
`...`
`0001` = All trigger outputs are 2 PTG clock cycles wide
`0000` = All trigger outputs are 1 PTG clock cycle wide

bit 3 **Unimplemented:** Read as ‘`0`’

bit 2-0 **PTGWDT<2:0>:** PTG Watchdog Timer Time-out Selection bits
`111` = Watchdog Timer will time out after 512 PTG clocks
`110` = Watchdog Timer will time out after 256 PTG clocks
`101` = Watchdog Timer will time out after 128 PTG clocks
`100` = Watchdog Timer will time out after 64 PTG clocks
`011` = Watchdog Timer will time out after 32 PTG clocks
`010` = Watchdog Timer will time out after 16 PTG clocks
`001` = Watchdog Timer will time out after 8 PTG clocks
`000` = Watchdog Timer is disabled

© 2017-2018 Microchip Technology Inc.

REGISTER 3-185: PTGBTE: PTG BROADCAST TRIGGER ENABLE LOW REGISTER(1)

R/W-0	R/W-0	R/W-0	R/W-0	R/W-0	R/W-0	R/W-0	R/W-0
PTGBTE<15:8>							
bit 15							bit 8

R/W-0	R/W-0	R/W-0	R/W-0	R/W-0	R/W-0	R/W-0	R/W-0
PTGBTE<7:0>							
bit 7							bit 0

Legend:			
R = Readable bit	W = Writable bit	U = Unimplemented bit, read as ‘0’	
-n = Value at POR	‘1’ = Bit is set	‘0’ = Bit is cleared	x = Bit is unknown

bit 15-0 **PTGBTE<15:0>:** PTG Broadcast Trigger Enable bits
`1` = Generates trigger when the broadcast command is executed
`0` = Does not generate trigger when the broadcast command is executed

Note 1: These bits are read-only when the module is executing Step commands.

REGISTER 3-186: PTGBTEH: PTG BROADCAST TRIGGER ENABLE HIGH REGISTER(1)

R/W-0	R/W-0	R/W-0	R/W-0	R/W-0	R/W-0	R/W-0	R/W-0
PTGBTE<31:24>							
bit 15							bit 8

R/W-0	R/W-0	R/W-0	R/W-0	R/W-0	R/W-0	R/W-0	R/W-0
PTGBTE<23:16>							
bit 7							bit 0

Legend:			
R = Readable bit	W = Writable bit	U = Unimplemented bit, read as ‘0’	
-n = Value at POR	‘1’ = Bit is set	‘0’ = Bit is cleared	x = Bit is unknown

bit 15-0 **PTGBTE<31:16>:** PTG Broadcast Trigger Enable bits
`1` = Generates trigger when the broadcast command is executed
`0` = Does not generate trigger when the broadcast command is executed

Note 1: These bits are read-only when the module is executing Step commands.

REGISTER 3-187: PTGHOLD: PTG HOLD REGISTER(1)

R/W-0	R/W-0	R/W-0	R/W-0	R/W-0	R/W-0	R/W-0	R/W-0
PTGHOLD<15:8>							
bit 15							bit 8

R/W-0	R/W-0	R/W-0	R/W-0	R/W-0	R/W-0	R/W-0	R/W-0
PTGHOLD<7:0>							
bit 7							bit 0

Legend:			
R = Readable bit	W = Writable bit	U = Unimplemented bit, read as ‘0’	
-n = Value at POR	‘1’ = Bit is set	‘0’ = Bit is cleared	x = Bit is unknown

bit 15-0 **PTGHOLD<15:0>:** PTG General Purpose Hold Register bits
This register holds the user-supplied data to be copied to the PTGTxLIM, PTGCxLIM, PTGSDLIM or PTGL0 register using the PTGCOPY command.

Note 1: These bits are read-only when the module is executing Step commands.

REGISTER 3-188: PTGT0LIM: PTG TIMER0 LIMIT REGISTER(1)

R/W-0	R/W-0	R/W-0	R/W-0	R/W-0	R/W-0	R/W-0	R/W-0
PTGT0LIM<15:8>							
bit 15							bit 8

R/W-0	R/W-0	R/W-0	R/W-0	R/W-0	R/W-0	R/W-0	R/W-0
PTGT0LIM<7:0>							
bit 7							bit 0

Legend:			
R = Readable bit	W = Writable bit	U = Unimplemented bit, read as ‘0’	
-n = Value at POR	‘1’ = Bit is set	‘0’ = Bit is cleared	x = Bit is unknown

bit 15-0 **PTGT0LIM<15:0>:** PTG Timer0 Limit Register bits
General Purpose Timer0 Limit register.

Note 1: These bits are read-only when the module is executing Step commands.

© 2017-2018 Microchip Technology Inc.

REGISTER 3-189: PTGT1LIM: PTG TIMER1 LIMIT REGISTER(1)

R/W-0	R/W-0	R/W-0	R/W-0	R/W-0	R/W-0	R/W-0	R/W-0
PTGT1LIM<15:8>							
bit 15							bit 8

R/W-0	R/W-0	R/W-0	R/W-0	R/W-0	R/W-0	R/W-0	R/W-0
PTGT1LIM<7:0>							
bit 7							bit 0

Legend:			
R = Readable bit	W = Writable bit	U = Unimplemented bit, read as ‘0’	
-n = Value at POR	‘1’ = Bit is set	‘0’ = Bit is cleared	x = Bit is unknown

bit 15-0 **PTGT1LIM<15:0>:** PTG Timer1 Limit Register bits
General Purpose Timer1 Limit register.

Note 1: These bits are read-only when the module is executing Step commands.

REGISTER 3-190: PTGSDLIM: PTG STEP DELAY LIMIT REGISTER(1)

R/W-0	R/W-0	R/W-0	R/W-0	R/W-0	R/W-0	R/W-0	R/W-0
PTGSDLIM<15:8>							
bit 15							bit 8

R/W-0	R/W-0	R/W-0	R/W-0	R/W-0	R/W-0	R/W-0	R/W-0
PTGSDLIM<7:0>							
bit 7							bit 0

Legend:			
R = Readable bit	W = Writable bit	U = Unimplemented bit, read as ‘0’	
-n = Value at POR	‘1’ = Bit is set	‘0’ = Bit is cleared	x = Bit is unknown

bit 15-0 **PTGSDLIM<15:0>:** PTG Step Delay Limit Register bits
This register holds a PTG Step delay value representing the number of additional PTG clocks between the start of a Step command and the completion of a Step command.

Note 1: These bits are read-only when the module is executing Step commands.

REGISTER 3-191: PTGC0LIM: PTG COUNTER 0 LIMIT REGISTER(1)

R/W-0	R/W-0	R/W-0	R/W-0	R/W-0	R/W-0	R/W-0	R/W-0
PTGC0LIM<15:8>							
bit 15							bit 8

R/W-0	R/W-0	R/W-0	R/W-0	R/W-0	R/W-0	R/W-0	R/W-0
PTGC0LIM<7:0>							
bit 7							bit 0

Legend:			
R = Readable bit	W = Writable bit	U = Unimplemented bit, read as ‘0’	
-n = Value at POR	‘1’ = Bit is set	‘0’ = Bit is cleared	x = Bit is unknown

bit 15-0 **PTGC0LIM<15:0>:** PTG Counter 0 Limit Register bits
This register is used to specify the loop count for the `PTGJMPC0` Step command or as a Limit register for the General Purpose Counter 0.

Note 1: These bits are read-only when the module is executing Step commands.

REGISTER 3-192: PTGC1LIM: PTG COUNTER 1 LIMIT REGISTER(1)

R/W-0	R/W-0	R/W-0	R/W-0	R/W-0	R/W-0	R/W-0	R/W-0
PTGC1LIM<15:8>							
bit 15							bit 8

R/W-0	R/W-0	R/W-0	R/W-0	R/W-0	R/W-0	R/W-0	R/W-0
PTGC1LIM<7:0>							
bit 7							bit 0

Legend:			
R = Readable bit	W = Writable bit	U = Unimplemented bit, read as ‘0’	
-n = Value at POR	‘1’ = Bit is set	‘0’ = Bit is cleared	x = Bit is unknown

bit 15-0 **PTGC1LIM<15:0>:** PTG Counter 1 Limit Register bits
This register is used to specify the loop count for the `PTGJMPC1` Step command or as a Limit register for the General Purpose Counter 1.

Note 1: These bits are read only when the module is executing step commands.

© 2017-2018 Microchip Technology Inc.

REGISTER 3-193: PTGADJ: PTG ADJUST REGISTER(1)

R/W-0	R/W-0	R/W-0	R/W-0	R/W-0	R/W-0	R/W-0	R/W-0
PTGADJ<15:8>							
bit 15							bit 8

R/W-0	R/W-0	R/W-0	R/W-0	R/W-0	R/W-0	R/W-0	R/W-0
PTGADJ<7:0>							
bit 7							bit 0

Legend:			
R = Readable bit	W = Writable bit	U = Unimplemented bit, read as ‘0’	
-n = Value at POR	‘1’ = Bit is set	‘0’ = Bit is cleared	x = Bit is unknown

bit 15-0 **PTGADJ<15:0>:** PTG Adjust Register bits
This register holds the user-supplied data to be added to the PTGTxLIM, PTGCxLIM, PTGSDLIM or PTGL0 register using the `PTGADD` command.

Note 1: These bits are read-only when the module is executing Step commands.

REGISTER 3-194: PTGL0: PTG LITERAL 0 REGISTER(1,2)

R/W-0	R/W-0	R/W-0	R/W-0	R/W-0	R/W-0	R/W-0	R/W-0
PTGL0<15:8>							
bit 15							bit 8

R/W-0	R/W-0	R/W-0	R/W-0	R/W-0	R/W-0	R/W-0	R/W-0
PTGL0<7:0>							
bit 7							bit 0

Legend:			
R = Readable bit	W = Writable bit	U = Unimplemented bit, read as ‘0’	
-n = Value at POR	‘1’ = Bit is set	‘0’ = Bit is cleared	x = Bit is unknown

bit 15-0 **PTGL0<15:0>:** PTG Literal 0 Register bits
This register holds the 6-bit value to be written to the CNVCHSEL<5:0> bits (ADCON3L<5:0>) with the `PTGCTRL` Step command.

Note 1: These bits are read-only when the module is executing Step commands.
2: The PTG strobe output is typically connected to the ADC Channel Select register. This allows the PTG to directly control ADC channel switching. See the specific device data sheet for connections of the PTG output.

REGISTER 3-195: PTGQPTR: PTG STEP QUEUE POINTER REGISTER(1)

U-0	U-0	U-0	U-0	U-0	U-0	U-0	U-0
—	—	—	—	—	—	—	—
bit 15							bit 8

U-0	U-0	U-0	R/W-0	R/W-0	R/W-0	R/W-0	R/W-0
—	—	—	PTGQPTR<4:0>				
bit 7							bit 0

Legend:			
R = Readable bit	W = Writable bit	U = Unimplemented bit, read as ‘0’	
-n = Value at POR	‘1’ = Bit is set	‘0’ = Bit is cleared	x = Bit is unknown

bit 15-5 **Unimplemented:** Read as ‘0’

bit 4-0 **PTGQPTR<4:0>:** PTG Step Queue Pointer Register bits
This register points to the currently active Step command in the Step queue.

Note 1: These bits are read only when the module is executing step commands.

REGISTER 3-196: PTGQUEn: PTG STEP QUEUE n POINTER REGISTER (n = 0-15)(1,2)

R/W-0	R/W-0	R/W-0	R/W-0	R/W-0	R/W-0	R/W-0	R/W-0
STEP2n+1<7:0>							
bit 15							bit 8

R/W-0	R/W-0	R/W-0	R/W-0	R/W-0	R/W-0	R/W-0	R/W-0
STEP2n<7:0>							
bit 7							bit 0

Legend:			
R = Readable bit	W = Writable bit	U = Unimplemented bit, read as ‘0’	
-n = Value at POR	‘1’ = Bit is set	‘0’ = Bit is cleared	x = Bit is unknown

bit 15-8 **STEP2n+1<7:0>:** PTG Command 4n+1 bits
A queue location for storage of the STEP2n+1 command byte, where ‘n’ is from PTGQUEn.

bit **STEP2n<7:0>:** PTG Command 4n+2 bits
A queue location for storage of the STEP2n command byte, where ‘n’ are the odd numbered Step Queue Pointers.

Note 1: These bits are read-only when the module is executing Step commands.
2: Refer to Table 3-1 for the Step command encoding.

© 2017-2018 Microchip Technology Inc.

TABLE 3-44: PTG STEP COMMAND FORMAT AND DESCRIPTION

Step Command Byte			
STEPx<7:0>			
CMD<3:0>		OPTION<3:0>	
bit 7	bit 4	bit 3	bit 0

bit 7-4	Step Command	CMD<3:0>	Command Description
	PTGCTRL	0000	Execute the control command as described by the OPTION<3:0> bits.
	PTGADD	0001	Add contents of the PTGADJ register to the target register as described by the OPTION<3:0> bits.
	PTGCOPY		Copy contents of the PTGHOLD register to the target register as described by the OPTION<3:0> bits.
	PTGSTRB	001x	Copy the values contained in the bits, CMD<0>:OPTION<3:0> to the strobe output bits <4:0>.
	PTGWHI	0100	Wait for a low-to-high edge input from a selected PTG trigger input as described by the OPTION<3:0> bits.
	PTGWLO	0101	Wait for a high-to-low edge input from a selected PTG trigger input as described by the OPTION<3:0> bits.
	—	0110	Reserved; do not use.(1)
	PTGIRQ	0111	Generate individual interrupt request as described by the OPTION<3:0> bits.
	PTGTRIG	100x	Generate individual trigger output as described by the bits, CMD<0>:OPTION<3:0>.
	PTGJMP	101x	Copy the values contained in the bits, CMD<0>:OPTION<3:0> to the PTGQPTR register, and jump to that Step queue.
	PTGJMPC0	110x	PTGC0 = PTGC0LIM: Increment the PTGQPTR register.
			PTGC0 ≠ PTGC0LIM: Increment Counter 0 (PTGC0) and copy the values contained in the bits, CMD<0>:OPTION<3:0> to the PTGQPTR register, and jump to that Step queue.
	PTGJMPC1	111x	PTGC1 = PTGC1LIM: Increment the PTGQPTR register.
			PTGC1 ≠ PTGC1LIM: Increment Counter 1 (PTGC1) and copy the values contained in the bits, CMD<0>:OPTION<3:0> to the PTGQPTR register, and jump to that Step queue.

Note 1: All reserved commands or options will execute, but they do not have any affect (i.e., execute as a NOP instruction).

TABLE 3-45: PTG COMMAND OPTIONS

bit 3-0	Step Command	OPTION<3:0>	Command Description
	PTGWHI(1) or PTGWLO(1)	0000	PTGI0 (see Table 3-46 for input assignments).
		• • •	• • •
		1111	PTGI15 (see Table 3-46 for input assignments).
	PTGIRQ(1)	0000	Generate PTG Interrupt 0.
		• • •	• • •
		0111	Generate PTG Interrupt 7.
		1000	Reserved; do not use.
		• • •	• • •
		1111	Reserved; do not use.
	PTGTRIG	0000	PTGO0 (see Table 3-47 for output assignments).
		0001	PTGO1 (see Table 3-47 for output assignments).
		• • •	• • •
		1110	PTGO30 (see Table 3-47 for output assignments).
		1111	PTGO31 (see Table 3-47 for output assignments).

Note 1: All reserved commands or options will execute, but they do not have any affect (i.e., execute as a NOP instruction).

© 2017-2018 Microchip Technology Inc.

TABLE 3-46: PTG INPUT DESCRIPTIONS

PTG Input Number	PTG Input Description
PTG Trigger Input 0	Trigger Input from Master PWM Channel 1
PTG Trigger Input 1	Trigger Input from Master PWM Channel 2
PTG Trigger Input 2	Trigger Input from Master PWM Channel 3
PTG Trigger Input 3	Trigger Input from Master PWM Channel 4
PTG Trigger Input 4	Trigger Input from Slave PWM Channel 1
PTG Trigger Input 5	Trigger Input from Slave PWM Channel 2
PTG Trigger Input 6	Trigger Input from Slave PWM Channel 3
PTG Trigger Input 7	Trigger Input from Master SCCP4
PTG Trigger Input 8	Trigger Input from Slave SCCP4
PTG Trigger Input 9	Trigger Input from Master Comparator 1
PTG Trigger Input 10	Trigger Input from Slave Comparator 1
PTG Trigger Input 11	Trigger Input from Slave Comparator 2
PTG Trigger Input 12	Trigger Input from Slave Comparator 3
PTG Trigger Input 13	Trigger Input Master ADC Done Group Interrupt
PTG Trigger Input 14	Trigger Input Slave ADC Done Group Interrupt
PTG Trigger Input 15	Trigger Input from INT2 PPS

TABLE 3-47: PTG OUTPUT DESCRIPTIONS

PTG Output Number	PTG Output Description
PTGO0 to PTGO11	Reserved
PTGO12	Trigger for Master ADC TRGSRC<30>
PTGO13	Trigger for Slave ADC TRGSRC<30>
PTGO16 to PTGO23	Reserved
PTGO24	PPS Master Output RP46
PTGO25	PPS Master Output RP47
PTGO26	PPS Master Input RP6
PTGO27	PPS Master Input RP7
PTGO28	PPS Slave Output RP46
PTGO29	PPS Slave Output RP47
PTGO30	PPS Slave Input RP6
PTGO31	PPS Slave Input RP7

© 2017-2018 Microchip Technology Inc.

NOTES:

© 2017-2018 Microchip Technology Inc.

4.0 SLAVE MODULES

4.1 Slave CPU

Note 1: This data sheet summarizes the features of the dsPIC33CH128MP508 family of devices. It is not intended to be a comprehensive reference source. To complement the information in this data sheet, refer to **"dsPIC33E Enhanced CPU"** (DS70005158) in the *"dsPIC33/PIC24 Family Reference Manual"*, which is available from the Microchip web site (www.microchip.com).

The Slave CPU fetches instructions from the PRAM (Program RAM Memory for the Slave). The Master core and Slave core can run independently asynchronously, at the same speed, or at a different speed.

On a POR, the PRAM will not have the user code. The Master core will load the Slave code from the Master Flash to the Slave PRAM, and once the code is verified, the Master core will release the Slave core to start executing the code (SLVEN (MSI1CON<15> = 1).

Note: All of the associated register names are the same on the Master as well as the Slave. The Slave code will be developed in a separate project in MPLAB® X IDE with the device selection, MP50X**S1**/20X**S1**, where **S1** indicates the Slave device.

The dsPIC33CH128MP508S1 family CPU has a 16-bit (data) modified Harvard architecture with an enhanced instruction set, including significant support for Digital Signal Processing (DSP). The CPU has a 24-bit instruction word with a variable length opcode field. The Program Counter (PC) is 23 bits wide and addresses up to 4M x 24 bits of user program memory space.

Most instructions execute in a single-cycle effective execution rate, with the exception of instructions that change the program flow, the double-word move (`MOV.D`) instruction, PSV accesses and the table instructions. Overhead-free program loop constructs are supported using the `DO` and `REPEAT` instructions, both of which are interruptible at any point.

4.1.1 REGISTERS

The dsPIC33CH128MP508S1 devices have sixteen, 16-bit Working registers in the programmer's model. Each of the Working registers can act as a data, address or address offset register. The 16th Working register (W15) operates as a Software Stack Pointer for interrupts and calls.

In addition, the dsPIC33CH128MP508S1 devices include four Alternate Working register sets, which consist of W0 through W14. The Alternate Working registers can be made persistent to help reduce the saving and restoring of register content during Interrupt Service Routines (ISRs). The Alternate Working registers can be assigned to a specific Interrupt Priority Level (IPL1 through IPL7) by configuring the CTXTx<2:0> bits in the FALTREG Configuration register. The Alternate Working registers can also be accessed manually by using the `CTXTSWP` instruction. The CCTXI<2:0> and MCTXI<2:0> bits in the CTXTSTAT register can be used to identify the current and most recent, manually selected Working register sets.

4.1.2 INSTRUCTION SET

The instruction set for dsPIC33CH128MP508S1 devices has two classes of instructions: the MCU class of instructions and the DSP class of instructions. These two instruction classes are seamlessly integrated into the architecture and execute from a single execution unit. The instruction set includes many addressing modes and was designed for optimum C compiler efficiency.

Note 1: Unlike the Master, there is no prefetch of the instruction implemented for the Slave.

4.1.3 DATA SPACE ADDRESSING

The base Data Space can be addressed as up to 4K words or 8 Kbytes, and is split into two blocks, referred to as X and Y data memory. Each memory block has its own independent Address Generation Unit (AGU). The MCU class of instructions operates solely through the X memory AGU, which accesses the entire memory map as one linear Data Space. Certain DSP instructions operate through the X and Y AGUs to support dual operand reads, which splits the data address space into two parts. The X and Y Data Space boundary is device-specific.

The upper 32 Kbytes of the Data Space memory map can optionally be mapped into Program Space (PS) at any 16K program word boundary. The program-to-Data Space mapping feature, known as Program Space Visibility (PSV), lets any instruction access Program Space as if it were Data Space. Refer to **"Data Memory"** (DS70595) in the *"dsPIC33/PIC24 Family Reference Manual"* for more details on PSV and table accesses.

On dsPIC33CH128MP508S1 family devices, overhead-free circular buffers (Modulo Addressing) are supported in both X and Y address spaces. The Modulo Addressing removes the software boundary checking overhead for DSP algorithms. The X AGU Circular Addressing can be used with any of the MCU class of instructions. The X AGU also supports Bit-Reversed Addressing to greatly simplify input or output data re-ordering for radix-2 FFT algorithms.

4.1.4 ADDRESSING MODES

The CPU supports these addressing modes:

- Inherent (no operand)
- Relative
- Literal
- Memory Direct
- Register Direct
- Register Indirect

Each instruction is associated with a predefined addressing mode group, depending upon its functional requirements. As many as six addressing modes are supported for each instruction.

© 2017-2018 Microchip Technology Inc.

FIGURE 4-1: dsPIC33CH128MP508S1 FAMILY (SLAVE) CPU BLOCK DIAGRAM

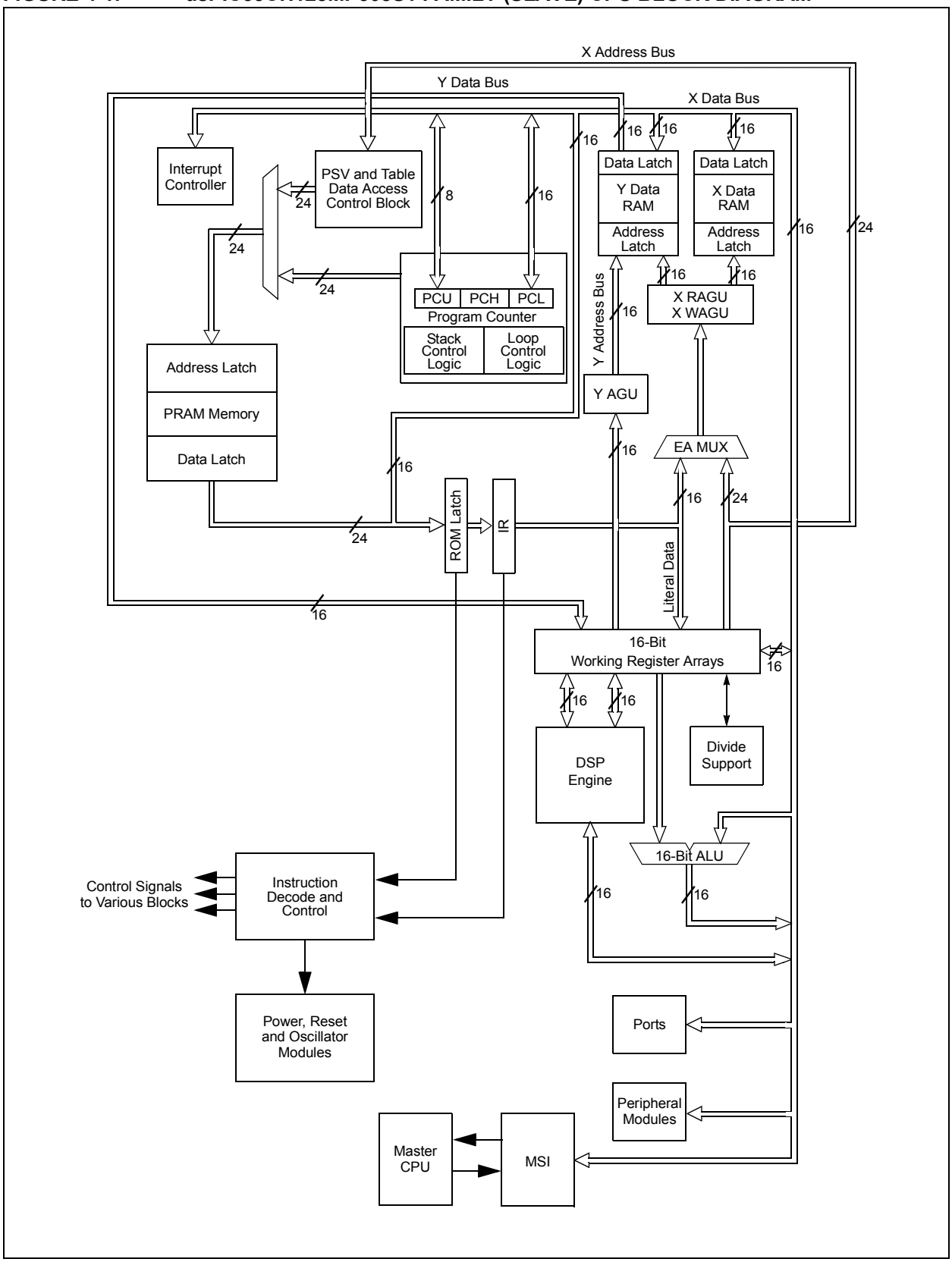

4.1.5 PROGRAMMER'S MODEL

The programmer's model for the dsPIC33CH128MP508S1 family is shown in Figure 4-2. All registers in the programmer's model are memory-mapped and can be manipulated directly by instructions. Table 4-1 lists a description of each register.

In addition to the registers contained in the programmer's model, the dsPIC33CH128MP508S1 devices contain control registers for Modulo Addressing, Bit-Reversed Addressing and interrupts. These registers are described in subsequent sections of this document.

All registers associated with the programmer's model are memory-mapped, as shown in Figure 4-3.

TABLE 4-1: PROGRAMMER'S MODEL REGISTER DESCRIPTIONS

Register(s) Name	Description
W0 through W15(1)	Working Register Array
W0 through W14(1)	Alternate 1 Working Register Array
W0 through W14(1)	Alternate 2 Working Register Array
W0 through W14(1)	Alternate 3 Working Register Array
W0 through W14(1)	Alternate 4 Working Register Array
ACCA, ACCB	40-Bit DSP Accumulators (Additional 4 Alternate Accumulators)
PC	23-Bit Program Counter
SR	ALU and DSP Engine STATUS Register
SPLIM	Stack Pointer Limit Value Register
TBLPAG	Table Memory Page Address Register
DSRPAG	Extended Data Space (EDS) Read Page Register
RCOUNT	REPEAT Loop Counter Register
DCOUNT	DO Loop Counter Register
DOSTARTH(2), DOSTARTL(2)	DO Loop Start Address Register (High and Low)
DOENDH, DOENDL	DO Loop End Address Register (High and Low)
CORCON	Contains DSP Engine, DO Loop Control and Trap Status bits

Note 1: Memory-mapped W0 through W14 represent the value of the register in the currently active CPU context.

2: The DOSTARTH and DOSTARTL registers are read-only.

© 2017-2018 Microchip Technology Inc.

FIGURE 4-2: PROGRAMMER'S MODEL (SLAVE)

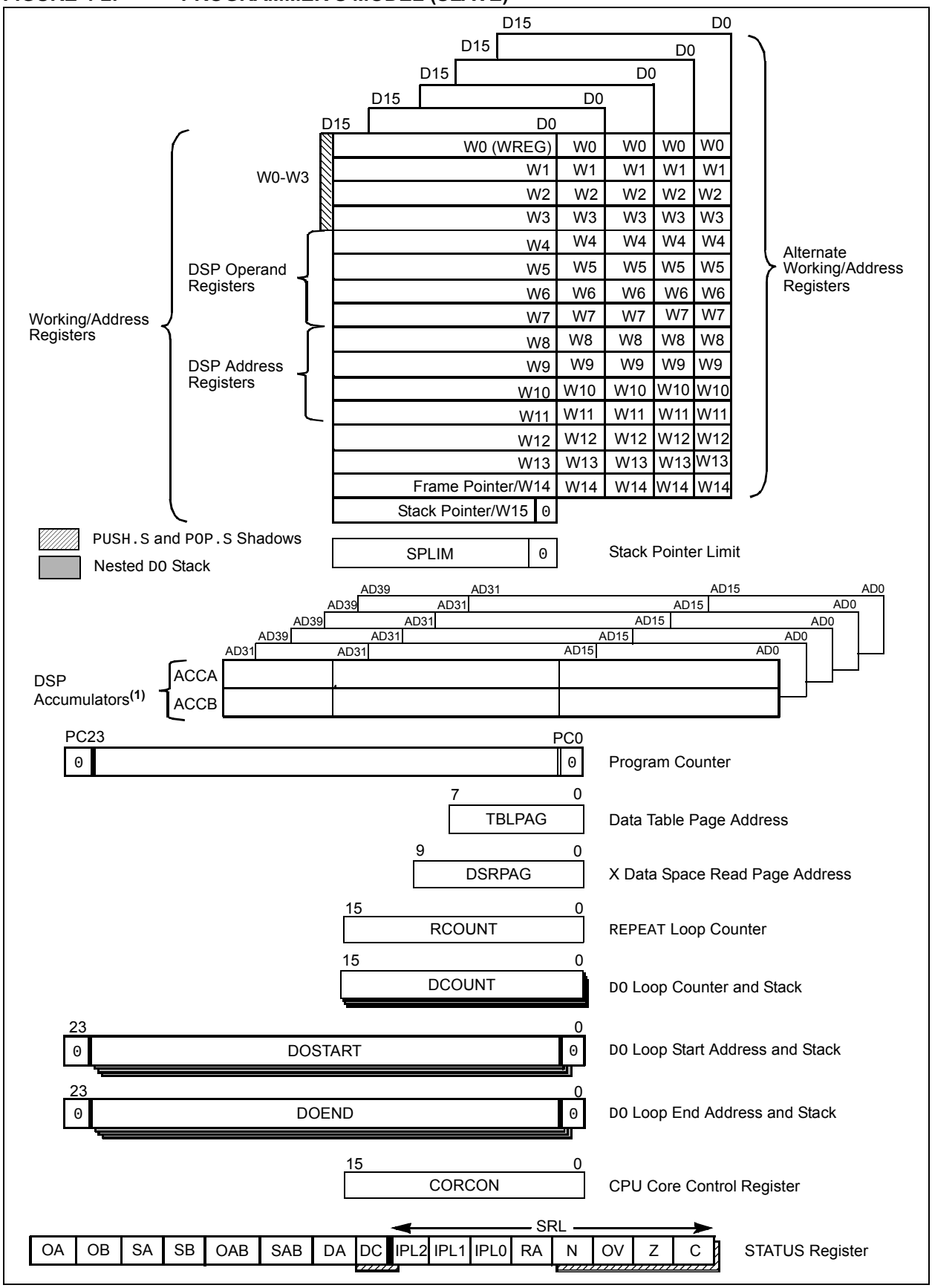

4.1.6 CPU RESOURCES

Many useful resources are provided on the main product page of the Microchip web site for the devices listed in this data sheet. This product page contains the latest updates and additional information.

4.1.6.1 Key Resources

- **"dsPIC33E Enhanced CPU"** (DS70005158) in the *"dsPIC33/PIC24 Family Reference Manual"*
- Code Samples
- Application Notes
- Software Libraries
- Webinars
- All related *"dsPIC33/PIC24 Family Reference Manual"* Sections
- Development Tools

© 2017-2018 Microchip Technology Inc.

4.1.7 CPU CONTROL/STATUS REGISTERS

REGISTER 4-1: SR: CPU STATUS REGISTER

R/W-0	R/W-0	R/W-0	R/W-0	R/C-0	R/C-0	R-0	R/W-0
OA	OB	SA(3)	SB(3)	OAB	SAB	DA	DC
bit 15							bit 8

R/W-0(2)	R/W-0(2)	R/W-0(2)	R-0	R/W-0	R/W-0	R/W-0	R/W-0
IPL2(1)	IPL1(1)	IPL0(1)	RA	N	OV	Z	C
bit 7							bit 0

Legend:	C = Clearable bit		
R = Readable bit	W = Writable bit	U = Unimplemented bit, read as ‘0’	
-n = Value at POR	‘1’= Bit is set	‘0’ = Bit is cleared	x = Bit is unknown

bit 15 **OA:** Accumulator A Overflow Status bit
1 = Accumulator A has overflowed
0 = Accumulator A has not overflowed

bit 14 **OB:** Accumulator B Overflow Status bit
1 = Accumulator B has overflowed
0 = Accumulator B has not overflowed

bit 13 **SA:** Accumulator A Saturation ‘Sticky’ Status bit(3)
1 = Accumulator A is saturated or has been saturated at some time
0 = Accumulator A is not saturated

bit 12 **SB:** Accumulator B Saturation ‘Sticky’ Status bit(3)
1 = Accumulator B is saturated or has been saturated at some time
0 = Accumulator B is not saturated

bit 11 **OAB:** OA || OB Combined Accumulator Overflow Status bit
1 = Accumulator A or B has overflowed
0 = Neither Accumulator A or B has overflowed

bit 10 **SAB:** SA || SB Combined Accumulator ‘Sticky’ Status bit
1 = Accumulator A or B is saturated or has been saturated at some time
0 = Neither Accumulator A or B is saturated

bit 9 **DA:** DO Loop Active bit
1 = DO loop is in progress
0 = DO loop is not in progress

bit 8 **DC:** MCU ALU Half Carry/$\overline{\text{Borrow}}$ bit
1 = A carry-out from the 4th low-order bit (for byte-sized data) or 8th low-order bit (for word-sized data) of the result occurred
0 = No carry-out from the 4th low-order bit (for byte-sized data) or 8th low-order bit (for word-sized data) of the result occurred

Note 1: The IPL<2:0> bits are concatenated with the IPL<3> bit (CORCON<3>) to form the CPU Interrupt Priority Level. The value in parentheses indicates the IPL, if IPL<3> = 1. User interrupts are disabled when IPL<3> = 1.

2: The IPL<2:0> Status bits are read-only when the NSTDIS bit (INTCON1<15>) = 1.

3: A data write to the SR register can modify the SA and SB bits by either a data write to SA and SB or by clearing the SAB bit. To avoid a possible SA or SB bit write race condition, the SA and SB bits should not be modified using bit operations.

REGISTER 4-1: SR: CPU STATUS REGISTER (CONTINUED)

bit 7-5 **IPL<2:0>:** CPU Interrupt Priority Level Status bits(1,2)

111 = CPU Interrupt Priority Level is 7 (15); user interrupts are disabled
110 = CPU Interrupt Priority Level is 6 (14)
101 = CPU Interrupt Priority Level is 5 (13)
100 = CPU Interrupt Priority Level is 4 (12)
011 = CPU Interrupt Priority Level is 3 (11)
010 = CPU Interrupt Priority Level is 2 (10)
001 = CPU Interrupt Priority Level is 1 (9)
000 = CPU Interrupt Priority Level is 0 (8)

bit 4 **RA:** REPEAT Loop Active bit

1 = REPEAT loop is in progress
0 = REPEAT loop is not in progress

bit 3 **N:** MCU ALU Negative bit

1 = Result was negative
0 = Result was non-negative (zero or positive)

bit 2 **OV:** MCU ALU Overflow bit

This bit is used for signed arithmetic (2's complement). It indicates an overflow of the magnitude that causes the sign bit to change state.
1 = Overflow occurred for signed arithmetic (in this arithmetic operation)
0 = No overflow occurred

bit 1 **Z:** MCU ALU Zero bit

1 = An operation that affects the Z bit has set it at some time in the past
0 = The most recent operation that affects the Z bit has cleared it (i.e., a non-zero result)

bit 0 **C:** MCU ALU Carry/$\overline{\text{Borrow}}$ bit

1 = A carry-out from the Most Significant bit of the result occurred
0 = No carry-out from the Most Significant bit of the result occurred

Note 1: The IPL<2:0> bits are concatenated with the IPL<3> bit (CORCON<3>) to form the CPU Interrupt Priority Level. The value in parentheses indicates the IPL, if IPL<3> = 1. User interrupts are disabled when IPL<3> = 1.

2: The IPL<2:0> Status bits are read-only when the NSTDIS bit (INTCON1<15>) = 1.

3: A data write to the SR register can modify the SA and SB bits by either a data write to SA and SB or by clearing the SAB bit. To avoid a possible SA or SB bit write race condition, the SA and SB bits should not be modified using bit operations.

© 2017-2018 Microchip Technology Inc.

REGISTER 4-2: CORCON: CORE CONTROL REGISTER

R/W-0	U-0	R/W-0	R/W-0	R/W-0	R-0	R-0	R-0
VAR	—	US1	US0	EDT(1)	DL2	DL1	DL0
bit 15							bit 8

R/W-0	R/W-0	R/W-1	R/W-0	R/C-0	R-0	R/W-0	R/W-0
SATA	SATB	SATDW	ACCSAT	IPL3(2)	SFA	RND	IF
bit 7							bit 0

Legend:	C = Clearable bit		
R = Readable bit	W = Writable bit	U = Unimplemented bit, read as ‘0’	
-n = Value at POR	‘1’ = Bit is set	‘0’ = Bit is cleared	x = Bit is unknown

bit 15 **VAR:** Variable Exception Processing Latency Control bit
1 = Variable exception processing is enabled
0 = Fixed exception processing is enabled

bit 14 **Unimplemented:** Read as ‘0’

bit 13-12 **US<1:0>:** DSP Multiply Unsigned/Signed Control bits
11 = Reserved
10 = DSP engine multiplies are mixed sign
01 = DSP engine multiplies are unsigned
00 = DSP engine multiplies are signed

bit 11 **EDT:** Early DO Loop Termination Control bit(1)
1 = Terminates executing DO loop at the end of the current loop iteration
0 = No effect

bit 10-8 **DL<2:0>:** DO Loop Nesting Level Status bits
111 = Seven DO loops are active
...
001 = One DO loop is active
000 = Zero DO loops are active

bit 7 **SATA:** ACCA Saturation Enable bit
1 = Accumulator A saturation is enabled
0 = Accumulator A saturation is disabled

bit 6 **SATB:** ACCB Saturation Enable bit
1 = Accumulator B saturation is enabled
0 = Accumulator B saturation is disabled

bit 5 **SATDW:** Data Space Write from DSP Engine Saturation Enable bit
1 = Data Space write saturation is enabled
0 = Data Space write saturation is disabled

bit 4 **ACCSAT:** Accumulator Saturation Mode Select bit
1 = 9.31 saturation (super saturation)
0 = 1.31 saturation (normal saturation)

bit 3 **IPL3:** CPU Interrupt Priority Level Status bit 3(2)
1 = CPU Interrupt Priority Level is greater than 7
0 = CPU Interrupt Priority Level is 7 or less

Note 1: This bit is always read as ‘0’.
2: The IPL3 bit is concatenated with the IPL<2:0> bits (SR<7:5>) to form the CPU Interrupt Priority Level.

REGISTER 4-2: CORCON: CORE CONTROL REGISTER (CONTINUED)

bit 2 **SFA:** Stack Frame Active Status bit
1 = Stack frame is active; W14 and W15 address 0x0000 to 0xFFFF, regardless of DSRPAG
0 = Stack frame is not active; W14 and W15 address the base Data Space

bit 1 **RND:** Rounding Mode Select bit
1 = Biased (conventional) rounding is enabled
0 = Unbiased (convergent) rounding is enabled

bit 0 **IF:** Integer or Fractional Multiplier Mode Select bit
1 = Integer mode is enabled for DSP multiply
0 = Fractional mode is enabled for DSP multiply

Note 1: This bit is always read as '0'.
2: The IPL3 bit is concatenated with the IPL<2:0> bits (SR<7:5>) to form the CPU Interrupt Priority Level.

REGISTER 4-3: CTXTSTAT: CPU W REGISTER CONTEXT STATUS REGISTER

U-0	U-0	U-0	U-0	U-0	R-0	R-0	R-0
—	—	—	—	—	CCTXI2	CCTXI1	CCTXI0
bit 15							bit 8

U-0	U-0	U-0	U-0	U-0	R-0	R-0	R-0
—	—	—	—	—	MCTXI2	MCTXI1	MCTXI0
bit 7							bit 0

Legend:			
R = Readable bit	W = Writable bit	U = Unimplemented bit, read as '0'	
-n = Value at POR	'1' = Bit is set	'0' = Bit is cleared	x = Bit is unknown

bit 15-11 **Unimplemented:** Read as '0'

bit 10-8 **CCTXI<2:0>:** Current (W Register) Context Identifier bits
111 = Reserved
...
100 = Alternate Working Register Set 4 is currently in use
011 = Alternate Working Register Set 3 is currently in use
010 = Alternate Working Register Set 2 is currently in use
001 = Alternate Working Register Set 1 is currently in use
000 = Default register set is currently in use

bit 7-3 **Unimplemented:** Read as '0'

bit 2-0 **MCTXI<2:0>:** Manual (W Register) Context Identifier bits
111 = Reserved
...
100 = Alternate Working Register Set 4 was most recently manually selected
011 = Alternate Working Register Set 3 was most recently manually selected
010 = Alternate Working Register Set 2 was most recently manually selected
001 = Alternate Working Register Set 1 was most recently manually selected
000 = Default register set was most recently manually selected

© 2017-2018 Microchip Technology Inc.

4.1.8 ARITHMETIC LOGIC UNIT (ALU)

The dsPIC33CH128MP508S1 family ALU is 16 bits wide and is capable of addition, subtraction, bit shifts and logic operations. Unless otherwise mentioned, arithmetic operations are two's complement in nature. Depending on the operation, the ALU can affect the values of the Carry (C), Zero (Z), Negative (N), Overflow (OV) and Digit Carry (DC) Status bits in the SR register. The C and DC Status bits operate as Borrow and Digit Borrow bits, respectively, for subtraction operations.

The ALU can perform 8-bit or 16-bit operations, depending on the mode of the instruction that is used. Data for the ALU operation can come from the W register array or data memory, depending on the addressing mode of the instruction. Likewise, output data from the ALU can be written to the W register array or a data memory location.

Refer to the *"16-Bit MCU and DSC Programmer's Reference Manual"* (DS70000157) for information on the SR bits affected by each instruction.

The core CPU incorporates hardware support for both multiplication and division. This includes a dedicated hardware multiplier and support hardware for 16-bit divisor division.

4.1.8.1 Multiplier

Using the high-speed, 17-bit x 17-bit multiplier, the ALU supports unsigned, signed or mixed-sign operation in several MCU Multiplication modes:

- 16-bit x 16-bit signed
- 16-bit x 16-bit unsigned
- 16-bit signed x 5-bit (literal) unsigned
- 16-bit signed x 16-bit unsigned
- 16-bit unsigned x 5-bit (literal) unsigned
- 16-bit unsigned x 16-bit signed
- 8-bit unsigned x 8-bit unsigned

4.1.8.2 Divider

The divide block supports 32-bit/16-bit and 16-bit/16-bit signed and unsigned integer divide operations with the following data sizes:

- 32-bit signed/16-bit signed divide
- 32-bit unsigned/16-bit unsigned divide
- 16-bit signed/16-bit signed divide
- 16-bit unsigned/16-bit unsigned divide

The quotient for all divide instructions ends up in W0 and the remainder in W1. 16-bit signed and unsigned `DIV` instructions can specify any W register for both the 16-bit divisor (Wn) and any W register (aligned) pair (W(m + 1):Wm) for the 32-bit dividend. The divide algorithm takes one cycle per bit of divisor, so both 32-bit/16-bit and 16-bit/16-bit instructions take the same number of cycles to execute.

4.1.9 DSP ENGINE

The DSP engine consists of a high-speed, 17-bit x 17-bit multiplier, a 40-bit barrel shifter and a 40-bit adder/subtracter (with two target accumulators, round and saturation logic).

The DSP engine can also perform inherent accumulator-to-accumulator operations that require no additional data. These instructions are, `ADD`, `SUB` and `NEG`.

The DSP engine has options selected through bits in the CPU Core Control register (CORCON), as listed below:

- Fractional or integer DSP multiply (IF)
- Signed, unsigned or mixed-sign DSP multiply (USx)
- Conventional or convergent rounding (RND)
- Automatic saturation on/off for ACCA (SATA)
- Automatic saturation on/off for ACCB (SATB)
- Automatic saturation on/off for writes to data memory (SATDW)
- Accumulator Saturation mode selection (ACCSAT)

TABLE 4-2: DSP INSTRUCTIONS SUMMARY

Instruction	Algebraic Operation	ACC Write-Back
`CLR`	$A = 0$	Yes
`ED`	$A = (x - y)^2$	No
`EDAC`	$A = A + (x - y)^2$	No
`MAC`	$A = A + (x \bullet y)$	Yes
`MAC`	$A = A + x^2$	No
`MOVSAC`	No change in A	Yes
`MPY`	$A = x \bullet y$	No
`MPY`	$A = x^2$	No
`MPY.N`	$A = -x \bullet y$	No
`MSC`	$A = A - x \bullet y$	Yes

4.2 Slave Memory Organization

Note: This data sheet summarizes the features of the dsPIC33CH128MP508 family of devices. It is not intended to be a comprehensive reference source. To complement the information in this data sheet, refer to **"dsPIC33E/PIC24E Program Memory"** (DS70000613) in the *"dsPIC33/PIC24 Family Reference Manual"*, which is available from the Microchip web site (www.microchip.com).

The dsPIC33CH128MP508S1 family architecture features separate program and data memory spaces, and buses. This architecture also allows the direct access of program memory from the Data Space (DS) during code execution.

4.2.1 PROGRAM ADDRESS SPACE

The program address memory space of the dsPIC33CH128MP508S1 family devices is 4M instructions. The space is addressable by a 24-bit value derived either from the 23-bit PC during program execution, or from table operation or Data Space remapping, as described in **Section 4.2.8 "Interfacing Program and Data Memory Spaces"**.

User application access to the program memory space is restricted to the lower half of the address range (0x000000 to 0x7FFFFF). The exception is the use of TBLRD operations, which use TBLPAG<7> to permit access to calibration data and Device ID sections of the configuration memory space.

The PRAM for the Slave dsPIC33CH128MP508S1 devices implements two 12-Kbyte PRAM panels with a total of 24 Kbytes of PRAM available for the Slave device. All variants of the Slave have the same amount of PRAM available, irrespective of the size of the Flash available on the Master Flash program memory, as shown in Figure 4-3.

FIGURE 4-3: PRAM (PROGRAM MEMORY) FOR SLAVE dsPIC33CH128MP508S1 DEVICES

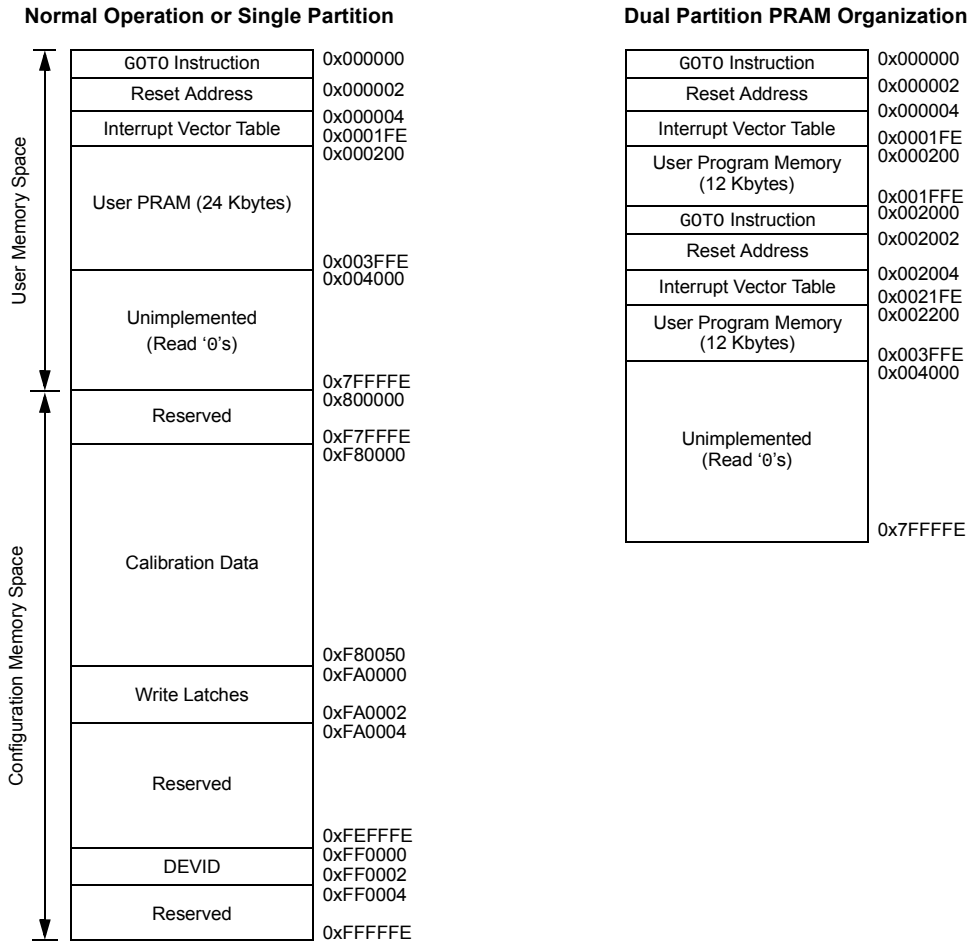

Note: Memory areas are not shown to scale.

© 2017-2018 Microchip Technology Inc.

4.2.1.1 Program Memory Organization

The program memory space is organized in word-addressable blocks. Although it is treated as 24 bits wide, it is more appropriate to think of each address of the program memory as a lower and upper word, with the upper byte of the upper word being unimplemented. The lower word always has an even address, while the upper word has an odd address (Figure 4-4).

Program memory addresses are always word-aligned on the lower word, and addresses are incremented, or decremented, by two, during code execution. This arrangement provides compatibility with data memory space addressing and makes data in the program memory space accessible.

4.2.1.2 Interrupt and Trap Vectors

All dsPIC33CH128MP508S1 family devices reserve the addresses between 0x000000 and 0x000200 for hard-coded program execution vectors. A hardware Reset vector is provided to redirect code execution from the default value of the PC on device Reset to the actual start of code. A `GOTO` instruction is programmed by the user application at address, 0x000000, of PRAM memory, with the actual address for the start of code at address, 0x000200, of Flash memory.

A more detailed discussion of the Interrupt Vector Tables (IVTs) is provided in Table 4-20.

FIGURE 4-4: PROGRAM MEMORY ORGANIZATION

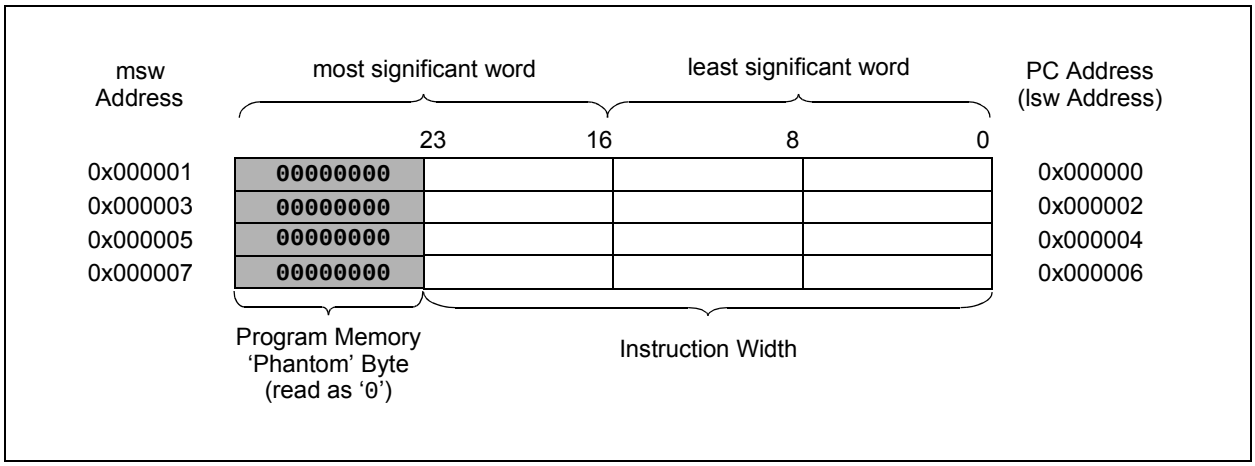

4.2.2 DATA ADDRESS SPACE (SLAVE)

The dsPIC33CH128MP508S1 family CPU has a separate 16-bit wide data memory space. The Data Space is accessed using separate Address Generation Units (AGUs) for read and write operations. The data memory map is shown in Figure 4-5.

All Effective Addresses (EAs) in the data memory space are 16 bits wide and point to bytes within the Data Space. This arrangement gives a base Data Space address range of 64 Kbytes or 32K words.

The lower half of the data memory space (i.e., when EA<15> = 0) is used for implemented memory addresses, while the upper half (EA<15> = 1) is reserved for the Program Space Visibility (PSV).

The dsPIC33CH128MP508S1 family devices implement up to 4 Kbytes of data memory. If an EA points to a location outside of this area, an all-zero word or byte is returned.

4.2.2.1 Data Space Width

The data memory space is organized in byte-addressable, 16-bit wide blocks. Data is aligned in data memory and registers as 16-bit words, but all Data Space EAs resolve to bytes. The Least Significant Bytes (LSBs) of each word have even addresses, while the Most Significant Bytes (MSBs) have odd addresses.

4.2.2.2 Data Memory Organization and Alignment

To maintain backward compatibility with PIC® MCU devices and improve Data Space memory usage efficiency, the dsPIC33CH128MP508S1 family instruction set supports both word and byte operations. As a consequence of byte accessibility, all Effective Address calculations are internally scaled to step through word-aligned memory. For example, the core recognizes that Post-Modified Register Indirect Addressing mode [Ws++] results in a value of Ws + 1 for byte operations and Ws + 2 for word operations.

A data byte read, reads the complete word that contains the byte, using the LSb of any EA to determine which byte to select. The selected byte is placed onto the LSB of the data path. That is, data memory and registers are organized as two parallel, byte-wide entities with shared (word) address decode, but separate write lines. Data byte writes only write to the corresponding side of the array or register that matches the byte address.

All word accesses must be aligned to an even address. Misaligned word data fetches are not supported, so care must be taken when mixing byte and word operations, or translating from 8-bit MCU code. If a misaligned read or write is attempted, an address error trap is generated. If the error occurred on a read, the instruction underway is completed. If the error occurred on a write, the instruction is executed but the write does not occur. In either case, a trap is then executed, allowing the system and/or user application to examine the machine state prior to execution of the address Fault.

All byte loads into any W register are loaded into the LSB; the MSB is not modified.

A Sign-Extend (SE) instruction is provided to allow user applications to translate 8-bit signed data to 16-bit signed values. Alternatively, for 16-bit unsigned data, user applications can clear the MSB of any W register by executing a Zero-Extend (ZE) instruction on the appropriate address.

4.2.2.3 SFR Space

The first 4 Kbytes of the Near Data Space, from 0x0000 to 0x0FFF, is primarily occupied by Special Function Registers (SFRs). These are used by the dsPIC33CH128MP508S1 family core and peripheral modules for controlling the operation of the device.

SFRs are distributed among the modules that they control and are generally grouped together by module. Much of the SFR space contains unused addresses; these are read as '0'.

Note:	The actual set of peripheral features and interrupts varies by the device. Refer to the corresponding device tables and pinout diagrams for device-specific information.

4.2.2.4 Near Data Space

The 8-Kbyte area, between 0x0000 and 0x1FFF, is referred to as the Near Data Space. Locations in this space are directly addressable through a 13-bit absolute address field within all memory direct instructions. Additionally, the whole Data Space is addressable using MOV instructions, which support Memory Direct Addressing mode with a 16-bit address field, or by using Indirect Addressing mode using a Working register as an Address Pointer.

© 2017-2018 Microchip Technology Inc.

FIGURE 4-5: DATA MEMORY MAP FOR SLAVE dsPIC33CH128MP508S1 DEVICES

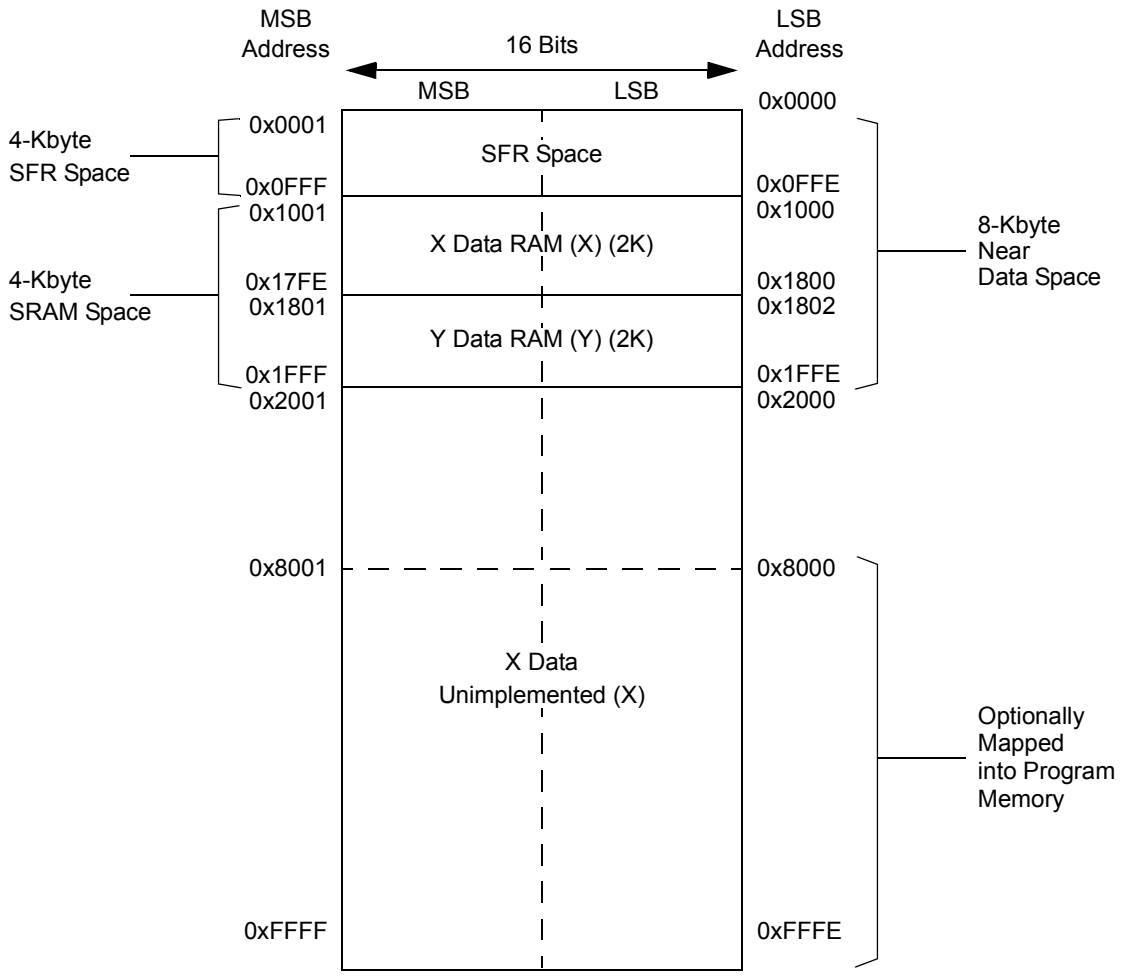

Note: Memory areas are not shown to scale.

4.2.2.5 X and Y Data Spaces

The dsPIC33CH128MP508S1 family core has two Data Spaces, X and Y. These Data Spaces can be considered either separate (for some DSP instructions) or as one unified linear address range (for MCU instructions). The Data Spaces are accessed using two Address Generation Units (AGUs) and separate data paths. This feature allows certain instructions to concurrently fetch two words from RAM, thereby enabling efficient execution of DSP algorithms, such as Finite Impulse Response (FIR) filtering and Fast Fourier Transform (FFT).

The X Data Space is used by all instructions and supports all addressing modes. X Data Space has separate read and write data buses. The X read data bus is the read data path for all instructions that view Data Space as combined X and Y address space. It is also the X data prefetch path for the dual operand DSP instructions (`MAC` class).

The Y Data Space is used in concert with the X Data Space by the `MAC` class of instructions (`CLR`, `ED`, `EDAC`, `MAC`, `MOVSAC`, `MPY`, `MPY.N` and `MSC`) to provide two concurrent data read paths.

Both the X and Y Data Spaces support Modulo Addressing mode for all instructions, subject to addressing mode restrictions. Bit-Reversed Addressing mode is only supported for writes to X Data Space.

All data memory writes, including in DSP instructions, view Data Space as combined X and Y address space. The boundary between the X and Y Data Spaces is device-dependent and is not user-programmable.

4.2.3 MEMORY RESOURCES

Many useful resources are provided on the main product page of the Microchip web site for the devices listed in this data sheet. This product page contains the latest updates and additional information.

4.2.3.1 Key Resources

- **"dsPIC33E/PIC24E Program Memory"** (DS70000613) in the *"dsPIC33/PIC24 Family Reference Manual"*
- Code Samples
- Application Notes
- Software Libraries
- Webinars
- All Related *"dsPIC33/PIC24 Family Reference Manual"* Sections
- Development Tools

© 2017-2018 Microchip Technology Inc.

4.2.4 SFR MAPS

The following tables show dsPIC33CH128MP508 family Slave SFR names, addresses and Reset values. These tables contain all registers applicable to the dsPIC33CH128MP508S1 family. Not all registers are present on all device variants. Refer to Table 1 and Table 2 for peripheral availability. Table 4-25 details port availability for the different package options.

TABLE 4-3: SLAVE SFR BLOCK 000h

Register	Address	All Resets	Register	Address	All Resets	Register	Address	All Resets
Core			DSRPAG	032	------0000000001	CLC1GLSL	0C8	0000000000000000
WREG0	000	0000000000000000	DSWPAG	034	-----00000000001	CLC1GLSH	0CA	0000000000000000
WREG1	002	0000000000000000	RCOUNT	036	xxxxxxxxxxxxxxxx	CLC2CONL	0CC	0-0-00--000--000
WREG2	004	0000000000000000	DCOUNT	038	xxxxxxxxxxxxxxxx	CLC2CONH	0CE	----------0000
WREG3	006	0000000000000000	DOSTART	03A	1111111111111111	CLC2SELL	0D0	-000-000-000-000
WREG4	008	0000000000000000	DOSTARTL	03A	1111111111111110	CLC2SELH	0D2	----------
WREG5	00A	0000000000000000	DOSTARTH	03C	0000000011111111	CLC2GLSL	0D4	0000000000000000
WREG6	00C	0000000000000000	DOENDL	03E	xxxxxxxxxxxxxxx0	CLC2GLSH	0D6	0000000000000000
WREG7	00E	0000000000000000	DOENDH	040	---------xxxxxxx	CLC3CONL	0D8	0-0-00--000--000
WREG8	010	0000000000000000	SR	042	0000000000000000	CLC3CONH	0DA	----------0000
WREG9	012	0000000000000000	CORCON	044	x-xx000000100000	CLC3SELL	0DC	-000-000-000-000
WREG10	014	0000000000000000	MODCON	046	00--000000000000	CLC3GLSL	0E0	0000000000000000
WREG11	016	0000000000000000	XMODSRT	048	xxxxxxxxxxxxxxx0	CLC3GLSH	0E2	0000000000000000
WREG12	018	0000000000000000	XMODEND	04A	xxxxxxxxxxxxxxx1	CLC4CONL	0E4	0-0-00--000--000
WREG13	01A	0000000000000000	YMODSRT	04C	xxxxxxxxxxxxxxx0	CLC4CONH	0E6	----------0000
WREG14	01C	0000000000000000	YMODEND	04E	xxxxxxxxxxxxxxx1	CLC4SELL	0E8	-000-000-000-000
WREG15	01E	0000100000000000	XBREV	050	0xxxxxxxxxxxxxxx	CLC4GLSL	0EC	0000000000000000
SPLIM	020	xxxxxxxxxxxxxxxx	DISICNT	052	xxxxxxxxxxxxxx00	CLC4GLSH	0EE	0000000000000000
ACCAL	022	xxxxxxxxxxxxxxxx	TBLPAG	054	--------00000000	ECCCONL	0F0	----------0
ACCAH	024	xxxxxxxxxxxxxxxx	YPAG	056	--------00000001	ECCCONH	0F2	0000000000000000
ACCAU	026	xxxxxxxxxxxxxxxx	MSTRPR	058	----------0-----	ECCADDRL	0F4	0000000000000000
ACCBL	028	xxxxxxxxxxxxxxxx	CTXTSTAT	05A	0000000000000000	ECCADDRH	0F6	0000000000000000
ACCBH	02A	xxxxxxxxxxxxxxxx	**CLC**			ECCSTATL	0F8	0000000000000000
ACCBU	02C	xxxxxxxxxxxxxxxx	CLC1CONL	0C0	0-0-00--000--000	ECCSTATH	0FA	------0000000000
PCL	02E	0000000000000000	CLC1CONH	0C2	----------0000			
PCH	030	--------00000000	CLC1SELL	0C4	-000-000-000-000			

Legend: x = unknown or indeterminate value; "-" = unimplemented bits. Address and Reset values are in hexadecimal and binary, respectively.

TABLE 4-4: SLAVE SFR BLOCK 100h

Register	Address	All Resets	Register	Address	All Resets	Register	Address	All Resets
Timers			INT1TMRL	15C	0000000000000000	SI1MBX2D	1DE	0000000000000000
T1CON	100	0-0000000-00-00-	INT1TMRH	15E	0000000000000000	SI1MBX3D	1E0	0000000000000000
TMR1	104	0000000000000000	INT1HLDL	160	0000000000000000	SI1MBX4D	1E2	0000000000000000
PR1	108	0000000000000000	INT1HLDH	162	0000000000000000	SI1MBX5D	1E4	0000000000000000
QEI			INDX1CNTL	164	0000000000000000	SI1MBX6D	1E6	0000000000000000
QEI1CON	140	0000000000000000	INDX1CNTH	166	0000000000000000	SI1MBX7D	1E8	0000000000000000
QEI1IOCL	144	000000000000xxxx	INDX1HLDL	168	0000000000000000	SI1MBX8D	1EA	0000000000000000
QEI1IOCH	146	----------0	INDX1HLDH	16A	0000000000000000	SI1MBX9D	1EC	0000000000000000
QEI1STAT	148	--00000000000000	QEI1GECL	16C	0000000000000000	SI1MBX10D	1EE	0000000000000000
POS1CNTL	14C	0000000000000000	QEI1GECH	16E	0000000000000000	SI1MBX11D	1F0	0000000000000000
POS1CNTH	14E	0000000000000000	QEI1LECL	170	0000000000000000	SI1MBX12D	1F2	0000000000000000
POS1HLDL	150	0000000000000000	QEI1LECH	172	0000000000000000	SI1MBX13D	1F4	0000000000000000
POS1HLDH	152	0000000000000000	SI1CON	1D2	0---xx0000000000	SI1MBX14D	1F6	0000000000000000
VEL1CNTL	154	0000000000000000	SI1STAT	1D4	0000000000000000	SI1MBX15D	1F8	0000000000000000
VEL1CNTH	156	0000000000000000	SI1MBXS	1D8	--------00000000	SI1FIFOCS	1FA	0---00000---0000
VEL1HLDL	158	0000000000000000	SI1MBX0D	1DA	0000000000000000	SWMRFDATA	1FC	0000000000000000
VEL1HLDH	15A	0000000000000000	SI1MBX1D	1DC	0000000000000000	SRMWFDATA	1FE	0000000000000000

Legend: x = unknown or indeterminate value; "-" = unimplemented bits. Address and Reset values are in hexadecimal and binary, respectively.

TABLE 4-5: SLAVE SFR BLOCK 200h

Register	Address	All Resets	Register	Address	All Resets	Register	Address	All Resets
I^2C			U1BRGH	242	----------0000	SPI1CON2L	2B0	----------00000
I2C1CONL	200	0-01000000000000	U1RXREG	244	--------xxxxxxxx	SPI1CON2H	2B2	----------
I2C1CONH	202	---------0000000	U1TXREG	248	-------xxxxxxxxx	SPI1STATL	2B4	---00--0001-1-00
I2C1STAT	204	000--00000000000	U1P1	24C	-------000000000	SPI1STATH	2B6	--000000--000000
I2C1ADD	208	------0000000000	U1P2	24E	-------000000000	SPI1BUFL	2B8	0000000000000000
I2C1MSK	20C	------0000000000	U1P3	250	0000000000000000	SPI1BUFH	2BA	0000000000000000
I2C1BRG	210	0000000000000000	U1P3H	252	--------00000000	SPI1BRGL	2BC	---xxxxxxxxxxxx
I2C1TRN	214	--------11111111	U1TXCHK	254	--------00000000	SPI1BRGH	2BE	----------
I2C1RCV	218	--------00000000	U1RXCHK	256	--------00000000	SPI1IMSKL	2C0	---00--0000-0-00
UART			U1SCCON	258	----------00000-	SPI1IMSKH	2C2	0-0000000-000000
U1MODE	238	0-000-0000000000	U1SCINT	25A	--00-000--00-000	SPI1URDTL	2C4	0000000000000000
U1MODEH	23A	00---00000000000	U1INT	25C	--------00---0--	SPI1URDTH	2C6	0000000000000000
U1STA	23C	0000000010000000	**SPI**					
U1STAH	23E	-000-00000101110	SPI1CON1L	2AC	0-00000000000000			
U1BRG	240	0000000000000000	SPI1CON1H	2AE	0000000000000000			

Legend: x = unknown or indeterminate value; "-" = unimplemented bits. Address and Reset values are in hexadecimal and binary, respectively.

© 2017-2018 Microchip Technology Inc.

TABLE 4-6: SLAVE SFR BLOCK 300h

Register	Address	All Resets	Register	Address	All Resets	Register	Address	All Resets
High-Speed PWM			PG1TRIGB	356	0000000000000000	PG3FFPCIH	3AE	0000-00000000000
PCLKCON	300	00-----0--00--00	PG1TRIGC	358	0000000000000000	PG3SPCIL	3B0	0000000000000000
FSCL	302	0000000000000000	PG1DTL	35A	--00000000000000	PG3SPCIH	3B2	0000-00000000000
FSMINPER	304	0000000000000000	PG1DTH	35C	--00000000000000	PG3LEBL	3B4	0000000000000000
MPHASE	306	0000000000000000	PG1CAP	35E	0000000000000000	PG3LEBH	3B6	-----000----0000
MDC	308	0000000000000000	PG2CONL	360	0-00000000000000	PG3PHASE	3B8	0000000000000000
MPER	30A	0000000000000000	PG2CONH	362	000-000000--0000	PG3DC	3BA	0000000000000000
LFSR	30C	0000000000000000	PG2STAT	364	0000000000000000	PG3DCA	3BC	--------00000000
CMBTRIGL	30E	--------00000000	PG2IOCONL	366	0000000000000000	PG3PER	3BE	0000000000000000
CMBTRIGH	310	--------00000000	PG2IOCONH	368	-000---0--000000	PG3TRIGA	3C0	0000000000000000
LOGCONA	312	000000000000-000	PG2EVTL	36A	00000000---00000	PG3TRIGB	3C2	0000000000000000
LOGCONB	314	000000000000-000	PG2EVTH	36C	0000--0000000000	PG3TRIGC	3C4	0000000000000000
LOGCONC	316	000000000000-000	PG2FPCIL	36E	0000000000000000	PG3DTL	3C6	--00000000000000
LOGCOND	318	000000000000-000	PG2FPCIH	370	0000-00000000000	PG3DTH	3C8	--00000000000000
LOGCONE	31A	000000000000-000	PG2CLPCIL	372	0000000000000000	PG3CAP	3CA	0000000000000000
LOGCONF	31C	000000000000-000	PG2CLPCIH	374	0000-00000000000	PG4CONL	3CC	0-00000000000000
PWMEVTA	31E	0000----0000-000	PG2FFPCIL	376	0000000000000000	PG4CONH	3CE	000-000000--0000
PWMEVTB	320	0000----0000-000	PG2FFPCIH	378	0000-00000000000	PG4STAT	3D0	0000000000000000
PWMEVTC	322	0000----0000-000	PG2SPCIL	37A	0000000000000000	PG4IOCONL	3D2	0000000000000000
PWMEVTD	324	0000----0000-000	PG2SPCIH	37C	0000-00000000000	PG4IOCONH	3D4	-000---0--000000
PWMEVTE	326	0000----0000-000	PG2LEBL	37E	0000000000000000	PG4EVTL	3D6	00000000---00000
PWMEVTF	328	0000----0000-000	PG2LEBH	380	-----000----0000	PG4EVTH	3D8	0000--0000000000
PG1CONL	32A	0-00000000000000	PG2PHASE	382	0000000000000000	PG4FPCIL	3DA	0000000000000000
PG1CONH	32C	000-000000--0000	PG2DC	384	0000000000000000	PG4FPCIH	3DC	0000-00000000000
PG1STAT	32E	0000000000000000	PG2DCA	386	--------00000000	PG4CLPCIL	3DE	0000000000000000
PG1IOCONL	330	0000000000000000	PG2PER	388	0000000000000000	PG4CLPCIH	3E0	0000-00000000000
PG1IOCONH	332	-000---0--000000	PG2TRIGA	38A	0000000000000000	PG4FFPCIL	3E2	0000000000000000
PG1EVTL	334	00000000---00000	PG2TRIGB	38C	0000000000000000	PG4FFPCIH	3E4	0000-00000000000
PG1EVTH	336	0000--0000000000	PG2TRIGC	38E	0000000000000000	PG4SPCIL	3E6	0000000000000000
PG1FPCIL	338	0000000000000000	PG2DTL	390	--00000000000000	PG4SPCIH	3E8	0000-00000000000
PG1FPCIH	33A	0000-00000000000	PG2DTH	392	--00000000000000	PG4LEBL	3EA	0000000000000000
PG1CLPCIL	33C	0000000000000000	PG2CAP	394	0000000000000000	PG4LEBH	3EC	-----000----0000
PG1CLPCIH	33E	0000-00000000000	PG3CONL	396	0-00000000000000	PG4PHASE	3EE	0000000000000000
PG1FFPCIL	340	0000000000000000	PG3CONH	398	000-000000--0000	PG4DC	3F0	0000000000000000
PG1FFPCIH	342	0000-00000000000	PG3STAT	39A	0000000000000000	PG4DCA	3F2	--------00000000
PG1SPCIL	344	0000000000000000	PG3IOCONL	39C	0000000000000000	PG4PER	3F4	0000000000000000
PG1SPCIH	346	0000-00000000000	PG3IOCONH	39E	-000---0--000000	PG4TRIGA	3F6	0000000000000000
PG1LEBL	348	0000000000000000	PG3EVTL	3A0	00000000---00000	PG4TRIGB	3F8	0000000000000000
PG1LEBH	34A	-----000----0000	PG3EVTH	3A2	0000--0000000000	PG4TRIGC	3FA	0000000000000000
PG1PHASE	34C	0000000000000000	PG3FPCIL	3A4	0000000000000000	PG4DTL	3FC	--00000000000000
PG1DC	34E	0000000000000000	PG3FPCIH	3A6	0000-00000000000	PG4DTH	3FE	--00000000000000
PG1DCA	350	--------00000000	PG3CLPCIL	3A8	0000000000000000	PG4CAP	400	0000000000000000
PG1PER	352	0000000000000000	PG3CLPCIH	3AA	0000-00000000000			
PG1TRIGA	354	0000000000000000	PG3FFPCIL	3AC	0000000000000000			

Legend: x = unknown or indeterminate value; "-" = unimplemented bits. Address and Reset values are in hexadecimal and binary, respectively.

TABLE 4-7: SLAVE SFR BLOCK 400h

Register	Address	All Resets	Register	Address	All Resets	Register	Address	All Resets
High-Speed PWM (Continued)			PG6CLPCIL	44A	0000000000000000	PG7DC	492	0000000000000000
PG5CONL	402	0-00000000000000	PG6CLPCIH	44C	0000-00000000000	PG7DCA	494	--------00000000
PG5CONH	404	000-000000--0000	PG6FFPCIL	44E	0000000000000000	PG7PER	496	0000000000000000
PG5STAT	406	0000000000000000	PG6FFPCIH	450	0000-00000000000	PG7TRIGA	498	0000000000000000
PG5IOCONL	408	0000000000000000	PG6SPCIL	452	0000000000000000	PG7TRIGB	49A	0000000000000000
PG5IOCONH	40A	-000---0--000000	PG6SPCIH	454	0000-00000000000	PG7TRIGC	49C	0000000000000000
PG5EVTL	40C	00000000---00000	PG6LEBL	456	0000000000000000	PG7DTL	49E	--00000000000000
PG5EVTH	40E	0000--0000000000	PG6LEBH	458	-----000----0000	PG7DTH	4A0	--00000000000000
PG5FPCIL	410	0000000000000000	PG6PHASE	45A	0000000000000000	PG7CAP	4A2	0000000000000000
PG5FPCIH	412	0000-00000000000	PG6DC	45C	0000000000000000	PG8CONL	4A4	0-00000000000000
PG5CLPCIL	414	0000000000000000	PG6DCA	45E	--------00000000	PG8CONH	4A6	000-000000--0000
PG5CLPCIH	416	0000-00000000000	PG6PER	460	0000000000000000	PG8STAT	4A8	0000000000000000
PG5FFPCIL	418	0000000000000000	PG6TRIGA	462	0000000000000000	PG8IOCONL	4AA	0000000000000000
PG5FFPCIH	41A	0000-00000000000	PG6TRIGB	464	0000000000000000	PG8IOCONH	4AC	-000---0--000000
PG5SPCIL	41C	0000000000000000	PG6TRIGC	466	0000000000000000	PG8EVTL	4AE	00000000---00000
PG5SPCIH	41E	0000-00000000000	PG6DTL	468	--00000000000000	PG8EVTH	4B0	0000--0000000000
PG5LEBL	420	0000000000000000	PG6DTH	46A	--00000000000000	PG8FPCIL	4B2	0000000000000000
PG5LEBH	422	-----000----0000	PG6CAP	46C	0000000000000000	PG8FPCIH	4B4	0000-00000000000
PG5PHASE	424	0000000000000000	PG7CONL	46E	0-00000000000000	PG8CLPCIL	4B6	0000000000000000
PG5DC	426	0000000000000000	PG7CONH	470	000-000000--0000	PG8CLPCIH	4B8	0000-00000000000
PG5DCA	428	--------00000000	PG7STAT	472	0000000000000000	PG8FFPCIL	4BA	0000000000000000
PG5PER	42A	0000000000000000	PG7IOCONL	474	0000000000000000	PG8FFPCIH	4BC	0000-00000000000
PG5TRIGA	42C	0000000000000000	PG7IOCONH	476	-000---0--000000	PG8SPCIL	4BE	0000000000000000
PG5TRIGB	42E	0000000000000000	PG7EVTL	478	00000000---00000	PG8SPCIH	4C0	0000-00000000000
PG5TRIGC	430	0000000000000000	PG7EVTH	47A	0000--0000000000	PG8LEBL	4C2	0000000000000000
PG5DTL	432	--00000000000000	PG7FPCIL	47C	0000000000000000	PG8LEBH	4C4	-----000----0000
PG5DTH	434	--00000000000000	PG7FPCIH	47E	0000-00000000000	PG8PHASE	4C6	0000000000000000
PG5CAP	436	0000000000000000	PG7CLPCIL	480	0000000000000000	PG8DC	4C8	0000000000000000
PG6CONL	438	0-00000000000000	PG7CLPCIH	482	0000-00000000000	PG8DCA	4CA	--------00000000
PG6CONH	43A	000-000000--0000	PG7FFPCIL	484	0000000000000000	PG8PER	4CC	0000000000000000
PG6STAT	43C	0000000000000000	PG7FFPCIH	486	0000-00000000000	PG8TRIGA	4CE	0000000000000000
PG6IOCONL	43E	0000000000000000	PG7SPCIL	488	0000000000000000	PG8TRIGB	4D0	0000000000000000
PG6IOCONH	440	-000---0--000000	PG7SPCIH	48A	0000-00000000000	PG8TRIGC	4D2	0000000000000000
PG6EVTL	442	00000000---00000	PG7LEBL	48C	0000000000000000	PG8DTL	4D4	--00000000000000
PG6EVTH	444	0000--0000000000	PG7LEBH	48E	-----000----0000	PG8DTH	4D6	--00000000000000
PG6FPCIL	446	0000000000000000	PG7PHASE	490	0000000000000000	PG8CAP	4D8	0000000000000000
PG6FPCIH	448	0000-00000000000						

Legend: x = unknown or indeterminate value; “-” = unimplemented bits. Address and Reset values are in hexadecimal and binary, respectively.

© 2017-2018 Microchip Technology Inc.

TABLE 4-8: SLAVE SFR BLOCK 800h

Register	Address	All Resets	Register	Address	All Resets	Register	Address	All Resets
Interrupts			IPC2	844	-100-100-100-100	IPC34	884	-100-100-100-100
IFS0	800	0000000000-00000	IPC3	846	-100-100-100-100	IPC35	886	---------100-100
IFS1	802	0000000000000000	IPC4	848	-100-100-100-100	IPC35	886	---------100-100
IFS2	804	00000-00-00000--	IPC5	84A	-100-100-100-100	IPC36	888	-----100--------
IFS3	806	000--------00000	IPC6	84C	-100-100-100-100	IPC42	894	-100-100-100-100
IFS4	808	--000----0000-00	IPC8	850	-100-100--------	IPC43	896	-100-100-100-100
IFS5	80A	000000000000000-	IPC9	852	-----100-100-100	IPC44	898	-100-100-100-100
IFS6	80C	0000000000000000	IPC10	854	-100-----100-100	IPC45	89A	-------------100
IFS7	80E	0000000000000---	IPC12	858	-100-100-100-100	IPC47	89E	-----100-100----
IFS8	810	--0000000000000-	IPC15	85E	-100-100-100----	INTCON1	8C0	000000000000000-
IFS9	812	--0---00-00--0--	IPC16	860	-100-----100-100	INTCON2	8C2	000----0----0000
IFS10	814	00000000--------	IPC17	862	-----100-100-100	INTCON3	8C4	-------0---0---0
IFS11	816	-00--------00000	IPC18	864	-100------------	INTCON4	8C6	--------------00
IEC0	820	0000000000-00000	IPC19	866	---------100-100	INTTREG	8C8	000-000000000000
IEC1	822	0000000000000000	IPC20	868	-100-100-100----	**Flash**		
IEC2	824	00000-00-00000--	IPC21	86A	-100-100-100-100	NVMCON	8D0	0000--00----0000
IEC3	826	000--------00000	IPC22	86C	-100-100-100-100	NVMADR	8D2	0000000000000000
IEC4	828	--000----0000-00	IPC23	86E	-100-100-100-100	NVMADRU	8D4	--------00000000
IEC5	82A	000000000000000-	IPC24	870	-100-100-100-100	NVMKEY	8D6	--------00000000
IEC6	82C	0000000000000000	IPC25	872	-100-100-100-100	NVMSRCADRL	8D8	0000000000000000
IEC7	82E	0000000000000---	IPC26	874	-100-100-100-100	NVMSRCADRH	8DA	--------00000000
IEC8	830	--0000000000000-	IPC27	876	-100-100-100-100	PGA1CON	8E0	00000000---0-010
IEC8	830	--0000000000000-	IPC28	878	-100------------	PGA1CAL	8E2	--------00000000
IEC9	832	--0---00-00--0--	IPC29	87A	-100-100-100-100	PGA2CON	8E4	00000000---0-010
IEC10	834	00000000------00	IPC30	87C	-100-100-100-100	PGA2CAL	8E6	--------00000000
IEC11	836	-00--------00000	IPC31	87E	-100-100-100-100	PGA3CON	8E8	00000000---0-010
IPC0	840	-100-100-100-100	IPC32	880	-100-100-100----	PGA3CAL	8EA	--------00000000
IPC1	842	-100-100-----100	IPC33	882	-100-100-100-100			

Legend: x = unknown or indeterminate value; “-” = unimplemented bits. Address and Reset values are in hexadecimal and binary, respectively.

TABLE 4-9: SLAVE SFR BLOCK 900h

Register	Address	All Resets	Register	Address	All Resets	Register	Address	All Resets
CCP			CCP2STATL	980	-----0--00xx0000	CCP3RAL	9B0	0000000000000000
CCP1CON1L	950	0-00000000000000	CCP2STATH	982	-----------00000	CCP3RBL	9B4	0000000000000000
CCP1CON1H	952	00--000000000000	CCP2TMRL	984	0000000000000000	CCP3BUFL	9B8	0000000000000000
CCP1CON2L	954	00-0----00000000	CCP2TMRH	986	0000000000000000	CCP3BUFH	9BA	0000000000000000
CCP1CON2H	956	0------100-00000	CCP2PRL	988	1111111111111111	CCP4CON1L	9BC	0-00000000000000
CCP1CON3H	95A	0000------0-00--	CCP2PRH	98A	1111111111111111	CCP4CON1H	9BE	00--000000000000
CCP1STATL	95C	-----0--00xx0000	CCP2RAL	98C	0000000000000000	CCP4CON2L	9C0	00-0----00000000
CCP1STATH	95E	-----------00000	CCP2RBL	990	0000000000000000	CCP4CON2H	9C2	0------100-00000
CCP1TMRL	960	0000000000000000	CCP2BUFL	994	0000000000000000	CCP4CON3H	9C6	0000------0-00--
CCP1TMRH	962	0000000000000000	CCP2BUFH	996	0000000000000000	CCP4STATL	9C8	-----0--00xx0000
CCP1PRL	964	1111111111111111	CCP3CON1L	998	0-00000000000000	CCP4STATH	9CA	-----------00000
CCP1PRH	966	1111111111111111	CCP3CON1H	99A	00--000000000000	CCP4TMRL	9CC	0000000000000000
CCP1RAL	968	0000000000000000	CCP3CON2L	99C	00-0----00000000	CCP4TMRH	9CE	0000000000000000
CCP1RBL	96C	0000000000000000	CCP3CON2H	99E	0------100-00000	CCP4PRL	9D0	1111111111111111
CCP1BUFL	970	0000000000000000	CCP3CON3H	9A2	0000------0-00--	CCP4PRH	9D2	1111111111111111
CCP1BUFH	972	0000000000000000	CCP3STATL	9A4	-----0--00xx0000	CCP4RAL	9D4	0000000000000000
CCP2CON1L	974	0-00000000000000	CCP3STATH	9A6	-----------00000	CCP4RBL	9D8	0000000000000000
CCP2CON1H	976	00--000000000000	CCP3TMRL	9A8	0000000000000000	CCP4BUFL	9DC	0000000000000000
CCP2CON2L	978	00-0----00000000	CCP3TMRH	9AA	0000000000000000	CCP4BUFH	9DE	0000000000000000
CCP2CON2H	97A	0------100-00000	CCP3PRL	9AC	1111111111111111			
CCP2CON3H	97E	0000------0-00--	CCP3PRH	9AE	1111111111111111			

Legend: x = unknown or indeterminate value; “-” = unimplemented bits. Address and Reset values are in hexadecimal and binary, respectively.

TABLE 4-10: SLAVE SFR BLOCK A00h

Register	Address	All Resets	Register	Address	All Resets	Register	Address	All Resets
DMA			DMACH0	AC4	---0-00000000000	DMACH1	ACE	---0-00000000000
DMACON	ABC	0-0-----------0	DMAINT0	AC6	0000000000000--0	DMAINT1	AD0	0000000000000--0
DMABUF	ABE	0000000000000000	DMASRC0	AC8	0000000000000000	DMASRC1	AD2	0000000000000000
DMAL	AC0	0001000000000000	DMADST0	ACA	0000000000000000	DMADST1	AD4	0000000000000000
DMAH	AC2	0001000000000000	DMACNT0	ACC	0000000000000001	DMACNT1	AD6	0000000000000001

Legend: x = unknown or indeterminate value; “-” = unimplemented bits. Address and Reset values are in hexadecimal and binary, respectively.

© 2017-2018 Microchip Technology Inc.

TABLE 4-11: SLAVE SFR BLOCK B00h

Register	Address	All Resets	Register	Address	All Resets	Register	Address	All Resets
ADC			ADCMP1LO	B44	0000000000000000	ADTRIG2L	B88	0000000000000000
ADCON1L	B00	000-00000----000	ADCMP1HI	B46	0000000000000000	ADTRIG2H	B8A	0000000000000000
ADCON1H	B02	--------011-----	ADCMP2ENL	B48	0000000000000000	ADTRIG3L	B8C	0000000000000000
ADCON2L	B04	00-0-00000000000	ADCMP2ENH	B4A	-----------00000	ADTRIG3H	B8E	0000000000000000
ADCON2H	B06	00-0000000000000	ADCMP2LO	B4C	0000000000000000	ADTRIG4L	B90	0000000000000000
ADCON3L	B08	00000x0000000000	ADCMP2HI	B4E	0000000000000000	ADTRIG4H	B92	0000000000000000
ADCON3H	B0A	000000000-------	ADCMP3ENL	B50	0000000000000000	ADTRIG5L	B94	000-----00000000
ADCON4L	B0C	0-----000-----xx	ADCMP3ENH	B52	-----------00000	ADCMP0CON	BA0	0000000000000000
ADCON4H	B0E	00----------0000	ADCMP3LO	B54	0000000000000000	ADCMP1CON	BA4	0000000000000000
ADMOD0L	B10	-0-0-0-0-0-0-0-0	ADCMP3HI	B56	0000000000000000	ADCMP2CON	BA8	0000000000000000
ADIEL	B20	xxxxxxxxxxxxxxxx	ADFL0DAT	B68	0000000000000000	ADCMP3CON	BAC	0000000000000000
ADIEH	B22	-----------xxxxx	ADFL0CON	B6A	0xx0000000000000	ADLVLTRGL	BD0	0000000000000000
ADCSS1L	B28	0000000000000000	ADFL1DAT	B6C	0000000000000000	ADLVLTRGH	BD2	-----------xxxxx
ADCSS1H	B2A	-------------000	ADFL1CON	B6E	0xx0000000000000	ADCORE0L	BD4	0000000000000000
ADSTATL	B30	0000000000000000	ADFL2DAT	B70	0000000000000000	ADCORE0H	BD6	0000001100000000
ADSTATH	B32	-----------00000	ADFL2CON	B72	0xx0000000000000	ADCORE1L	BD8	0000000000000000
ADCMP0ENL	B38	0000000000000000	ADFL3DAT	B74	0000000000000000	ADCORE1H	BDA	0000001100000000
ADCMP0ENH	B3A	-----------00000	ADFL3CON	B76	0xx0000000000000	ADEIEL	BF0	xxxxxxxxxxxxxxxx
ADCMP0LO	B3C	0000000000000000	ADTRIG0L	B80	0000000000000000	ADEIEH	BF2	-----------xxxxx
ADCMP0HI	B3E	0000000000000000	ADTRIG0H	B82	0000000000000000	ADEISTATL	BF8	xxxxxxxxxxxxxxxx
ADCMP1ENL	B40	0000000000000000	ADTRIG1L	B84	0000000000000000	ADEISTATH	BFA	-----------xxxxx
ADCMP1ENH	B42	-----------00000	ADTRIG1H	B86	0000000000000000			

Legend: x = unknown or indeterminate value; "-" = unimplemented bits. Address and Reset values are in hexadecimal and binary, respectively.

TABLE 4-12: SLAVE SFR BLOCK C00h

Register	Address	All Resets	Register	Address	All Resets	Register	Address	All Resets
ADC (Continued)			ADCBUF12	C24	0000000000000000	SLP1CONL	C90	0000000000000000
ADCON5L	C00	0-------0-------	ADCBUF13	C26	0000000000000000	SLP1CONH	C92	0---000---------
ADCON5H	C02	0---xxxx0-------	ADCBUF14	C28	0000000000000000	SLP1DAT	C94	0000000000000000
ADCAL0L	C04	0000000000000000	ADCBUF15	C2A	0000000000000000	DAC2CONL	C98	000--000x0000000
ADCAL1H	C0A	00000-00-000----	ADCBUF16	C2C	0000000000000000	DAC2CONH	C9A	------0000000000
ADCBUF0	C0C	0000000000000000	ADCBUF17	C2E	0000000000000000	DAC2DATL	C9C	0000000000000000
ADCBUF1	C0E	0000000000000000	ADCBUF18	C30	0000000000000000	DAC2DATH	C9E	0000000000000000
ADCBUF2	C10	0000000000000000	ADCBUF19	C32	0000000000000000	SLP2CONL	CA0	0000000000000000
ADCBUF3	C12	0000000000000000	**DAC**			SLP2CONH	CA2	0---000---------
ADCBUF4	C14	0000000000000000	DACCTRL1L	C80	000-----0000-000	SLP2DAT	CA4	0000000000000000
ADCBUF5	C16	0000000000000000	DACCTRL2L	C84	------0001010101	DAC3CONL	CA8	000--000x0000000
ADCBUF6	C18	0000000000000000	DACCTRL2H	C86	------0010001010	DAC3CONH	CAA	------0000000000
ADCBUF7	C1A	0000000000000000	DAC1CONL	C88	000--000x0000000	DAC3DATL	CAC	0000000000000000
ADCBUF8	C1C	0000000000000000	ADCBUF12	C24	0000000000000000	DAC3DATH	CAE	0000000000000000
ADCBUF9	C1E	0000000000000000	DAC1CONH	C8A	------0000000000	SLP3CONL	CB0	0000000000000000
ADCBUF10	C20	0000000000000000	DAC1DATL	C8C	0000000000000000	SLP3CONH	CB2	0---000---------
ADCBUF11	C22	0000000000000000	DAC1DATH	C8E	0000000000000000	SLP3DAT	CB4	0000000000000000

Legend: x = unknown or indeterminate value; "-" = unimplemented bits. Address and Reset values are in hexadecimal and binary, respectively.

TABLE 4-13: SLAVE SFR BLOCK D00h

Register	Address	All Resets	Register	Address	All Resets	Register	Address	All Resets
I/O Ports			RPINR23	D32	1111111111111111	RPOR8	D90	--000000--000000
RPCON	D00	----0----------	RPINR37	D4E	11111111--------	RPOR9	D92	--000000--000000
RPINR0	D04	11111111--------	RPINR38	D50	--------11111111	RPOR10	D94	--000000--000000
RPINR1	D06	1111111111111111	RPINR42	D58	1111111111111111	RPOR11	D96	--000000--000000
RPINR2	D08	11111111--------	RPINR43	D5A	1111111111111111	RPOR12	D98	--000000--000000
RPINR3	D0A	1111111111111111	RPINR44	D5C	1111111111111111	RPOR13	D9A	--000000--000000
RPINR4	D0C	1111111111111111	RPINR45	D5E	1111111111111111	RPOR14	D9C	--000000--000000
RPINR5	D0E	1111111111111111	RPINR46	D60	1111111111111111	RPOR15	D9E	--000000--000000
RPINR6	D10	1111111111111111	RPINR47	D62	1111111111111111	RPOR16	DA0	--000000--000000
RPINR11	D1A	1111111111111111	RPOR0	D80	--000000--000000	RPOR17	DA2	--000000--000000
RPINR12	D1C	1111111111111111	RPOR1	D82	--000000--000000	RPOR18	DA4	--000000--000000
RPINR13	D1E	1111111111111111	RPOR2	D84	--000000--000000	RPOR19	DA6	--000000--000000
RPINR14	D20	1111111111111111	RPOR3	D86	--000000--000000	RPOR20	DA8	--000000--000000
RPINR15	D22	1111111111111111	RPOR4	D88	--000000--000000	RPOR21	DAA	--000000--000000
RPINR18	D28	1111111111111111	RPOR5	D8A	--000000--000000	RPOR22	DAC	--000000--000000
RPINR20	D2C	1111111111111111	RPOR6	D8C	--000000--000000			
RPINR21	D2E	1111111111111111	RPOR7	D8E	--000000--000000			

Legend: x = unknown or indeterminate value; “-” = unimplemented bits. Address and Reset values are in hexadecimal and binary, respectively.

© 2017-2018 Microchip Technology Inc.

TABLE 4-14: SLAVE SFR BLOCK E00h

Register	Address	All Resets	Register	Address	All Resets	Register	Address	All Resets
I/O Ports (Continued)			CNEN0B	E2C	0000000000000000	CNPUD	E5E	0000000000000000
ANSELA	E00	----------1111-	CNSTATB	E2E	0000000000000000	CNPDD	E60	0000000000000000
TRISA	E02	----------11111	CNEN1B	E30	0000000000000000	CNCOND	E62	0---0----------
PORTA	E04	----------xxxxx	CNFB	E32	0000000000000000	CNEN0D	E64	0000000000000000
LATA	E06	----------xxxxx	ANSELC	E38	--------11--1111	CNSTATD	E66	0000000000000000
ODCA	E08	----------00000	TRISC	E3A	1111111111111111	CNEN1D	E68	0000000000000000
CNPUA	E0A	----------00000	PORTC	E3C	xxxxxxxxxxxxxxxx	CNFD	E6A	0000000000000000
CNPDA	E0C	----------00000	LATC	E3E	xxxxxxxxxxxxxxxx	ANSELE	E70	---------1------
CNEN0A	E10	----------00000	ODCC	E40	0000000000000000	TRISE	E72	1111111111111111
CNSTATA	E12	----------00000	CNPUC	E42	0000000000000000	PORTE	E74	xxxxxxxxxxxxxxxx
CNEN1A	E14	----------00000	CNPDC	E44	0000000000000000	LATE	E76	xxxxxxxxxxxxxxxx
CNFA	E16	----------00000	CNCONC	E46	0---0----------	ODCE	E78	0000000000000000
ANSELB	E1C	-------11--11111	CNEN0C	E48	0000000000000000	CNPUE	E7A	0000000000000000
TRISB	E1E	1111111111111111	CNSTATC	E4A	0000000000000000	CNPDE	E7C	0000000000000000
PORTB	E20	xxxxxxxxxxxxxxxx	CNEN1C	E4C	0000000000000000	CNCONE	E7E	0---0----------
LATB	E22	xxxxxxxxxxxxxxxx	CNFC	E4E	0000000000000000	CNEN0E	E80	0000000000000000
ODCB	E24	0000000000000000	ANSELD	E54	-11111----------	CNSTATE	E82	0000000000000000
CNPUB	E26	0000000000000000	TRISD	E56	1111111111111111	CNEN1E	E84	0000000000000000
CNPDB	E28	0000000000000000	PORTD	E58	xxxxxxxxxxxxxxxx	CNFE	E86	0000000000000000
CNEN0A	E10	----------00000	LATD	E5A	xxxxxxxxxxxxxxxx			
CNCONB	E2A	0---0----------	ODCD	E5C	0000000000000000			

Legend: x = unknown or indeterminate value; "-" = unimplemented bits. Address and Reset values are in hexadecimal and binary, respectively.

TABLE 4-15: SLAVE SFR BLOCK F00h

Register	Address	All Resets	Register	Address	All Resets	Register	Address	All Resets
Reset			PMD1	FA4	----000-00000-00	REFOTRIML	FBC	0000000000000000
RCON	F80	00--x-0000000011	PMD2	FA6	--------00000000	REFOTRIMH	FBE	----------
Oscillator			PMD4	FAA	----------0---	PCTRAPL	FBF	0000000000000000
OSCCON	F84	-000-xxx0-0-0--0	PMD6	FAE	--000000--------	PCTRAPL	FC0	0000000000000000
CLKDIV	F86	00110000--000001	PMD7	FB0	-------x----0---	PCTRAPH	FC2	--------00000000
PLLFBD	F88	----000010010110	PMD8	FB2	---00--0--xx000-			
PLLDIV	F8A	------00-011-001	**WDT**					
APLLFBD1	F90	----000010010110	WDTCONL	FB4	0--0000000000000			
APLLDIV1	F92	------00-011-001	WDTCONH	FB6	0000000000000000			
PMD			REFOCONL	FB8	0-000-00----0000			
PMDCON	FA0	----0----------	REFOCONH	FBA	-000000000000000			

Legend: x = unknown or indeterminate value; "-" = unimplemented bits. Reset and address values are in hexadecimal.

4.2.4.1 Paged Memory Scheme

The dsPIC33CH128MP508S1 architecture extends the available Data Space through a paging scheme, which allows the available Data Space to be accessed using `MOV` instructions in a linear fashion for pre- and post-modified Effective Addresses (EAs). The upper half of the base Data Space address is used in conjunction with the Data Space Read Page (DSRPAG) register to form the Program Space Visibility (PSV) address.

The Data Space Read Page (DSRPAG) register is located in the SFR space. Construction of the PSV address is shown in Figure 4-6. When DSRPAG<9> = `1` and the base address bit, EA<15> = `1`, the DSRPAG<8:0> bits are concatenated onto EA<14:0> to form the 24-bit PSV read address.

The paged memory scheme provides access to multiple 32-Kbyte windows in the PSV memory. The Data Space Read Page (DSRPAG) register, in combination with the upper half of the Data Space address, can provide up to 8 Mbytes of PSV address space. The paged data memory space is shown in Figure 4-7.

The Program Space (PS) can be accessed with a DSRPAG of 0x200 or greater. Only reads from PS are supported using the DSRPAG.

FIGURE 4-6: PROGRAM SPACE VISIBILITY (PSV) READ ADDRESS GENERATION

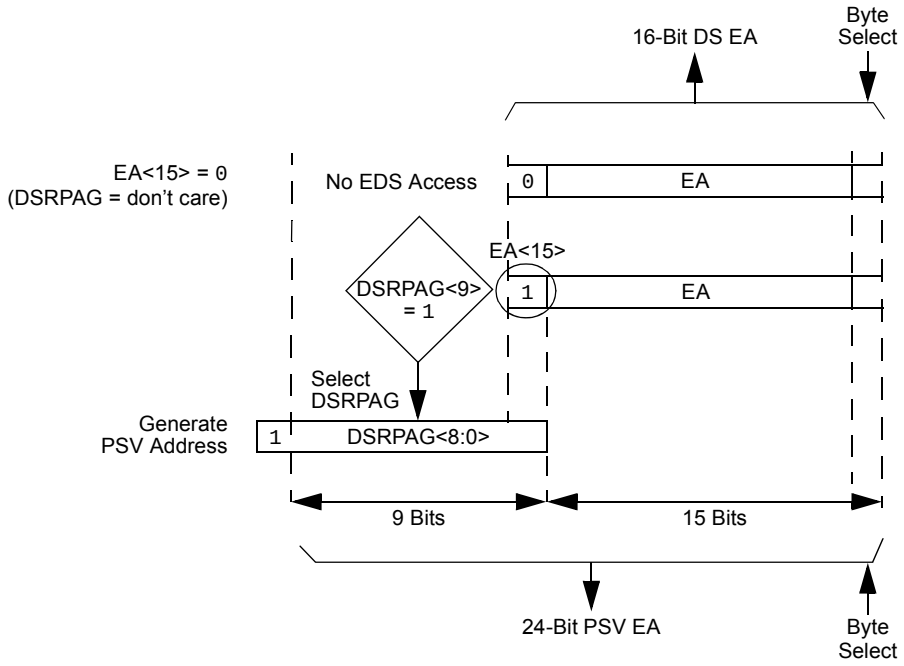

Note: DS read access when DSRPAG = 0x000 will force an address error trap.

© 2017-2018 Microchip Technology Inc.

FIGURE 4-7: PAGED DATA MEMORY SPACE

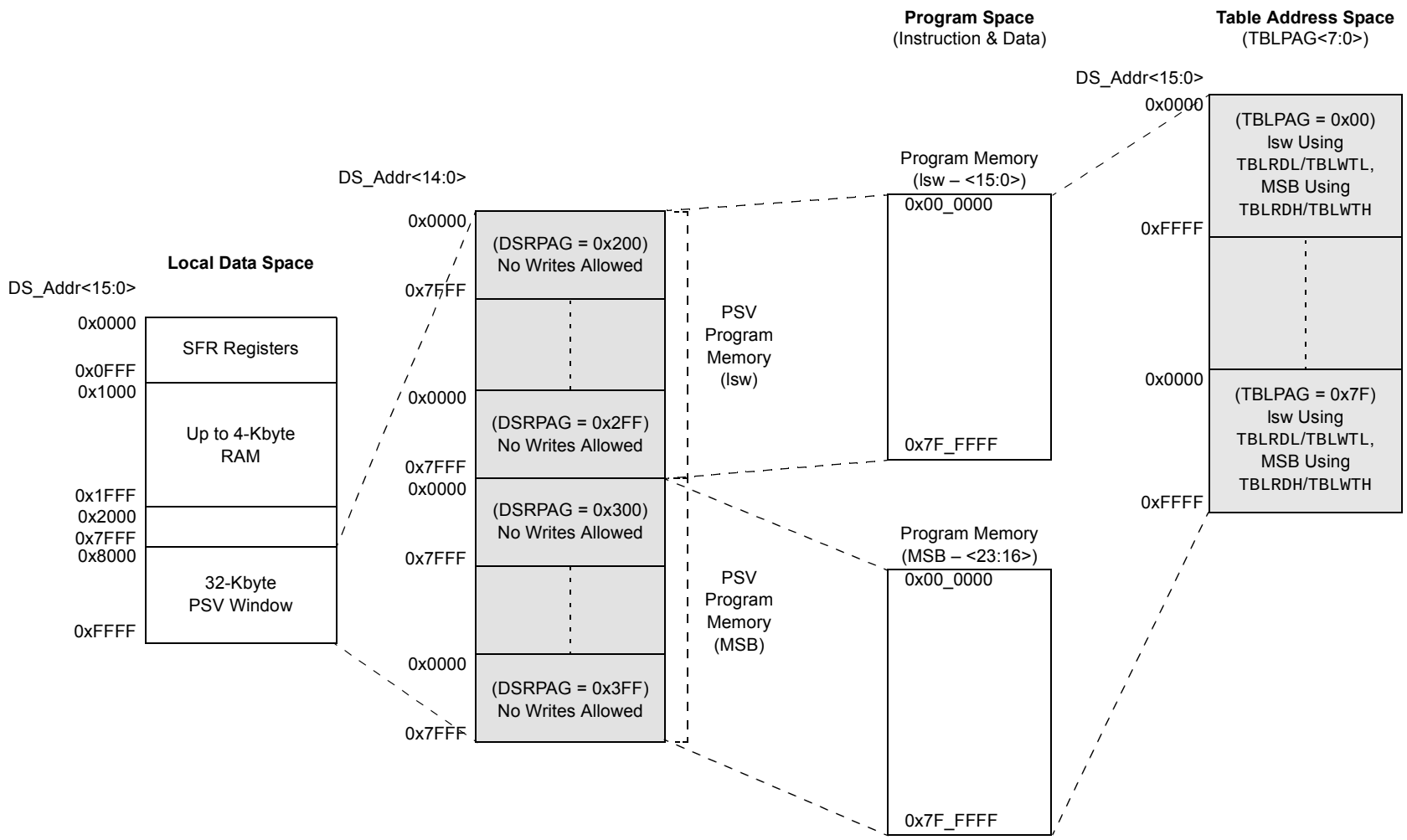

© 2017-2018 Microchip Technology Inc.

When a PSV page overflow or underflow occurs, EA<15> is cleared as a result of the register indirect EA calculation. An overflow or underflow of the EA in the PSV pages can occur at the page boundaries when:

- The initial address, prior to modification, addresses the PSV page
- The EA calculation uses Pre- or Post-Modified Register Indirect Addressing; however, this does not include Register Offset Addressing

In general, when an overflow is detected, the DSRPAG register is incremented and the EA<15> bit is set to keep the base address within the PSV window. When an underflow is detected, the DSRPAG register is decremented and the EA<15> bit is set to keep the base address within the PSV window. This creates a linear PSV address space, but only when using Register Indirect Addressing modes.

Exceptions to the operation described above arise when entering and exiting the boundaries of Page 0 and PSV spaces. Table 4-16 lists the effects of overflow and underflow scenarios at different boundaries.

In the following cases, when overflow or underflow occurs, the EA<15> bit is set and the DSRPAG is not modified; therefore, the EA will wrap to the beginning of the current page:

- Register Indirect with Register Offset Addressing
- Modulo Addressing
- Bit-Reversed Addressing

TABLE 4-16: OVERFLOW AND UNDERFLOW SCENARIOS AT PAGE 0 AND PSV SPACE BOUNDARIES(2,3,4)

O/U, R/W	Operation	Before			After		
		DSRPAG	DS EA<15>	Page Description	DSRPAG	DS EA<15>	Page Description
O, Read	[++Wn] or [Wn++]	DSRPAG = 0x2FF	1	PSV: Last lsw page	DSRPAG = 0x300	1	PSV: First MSB page
O, Read		DSRPAG = 0x3FF	1	PSV: Last MSB page	DSRPAG = 0x3FF	0	See **Note 1**
U, Read	[--Wn] or [Wn--]	DSRPAG = 0x001	1	PSV page	DSRPAG = 0x001	0	See **Note 1**
U, Read		DSRPAG = 0x200	1	PSV: First lsw page	DSRPAG = 0x200	0	See **Note 1**
U, Read		DSRPAG = 0x300	1	PSV: First MSB page	DSRPAG = 0x2FF	1	PSV: Last lsw page

Legend: O = Overflow, U = Underflow, R = Read, W = Write

Note 1: The Register Indirect Addressing now addresses a location in the base Data Space (0x0000-0x8000).

2: An EDS access, with DSRPAG = 0x000, will generate an address error trap.

3: Only reads from PS are supported using DSRPAG.

4: Pseudolinear Addressing is not supported for large offsets.

© 2017-2018 Microchip Technology Inc.

4.2.4.2 Extended X Data Space

The lower portion of the base address space range, between 0x0000 and 0x7FFF, is always accessible, regardless of the contents of the Data Space Read Page register. It is indirectly addressable through the register indirect instructions. It can be regarded as being located in the default EDS Page 0 (i.e., EDS address range of 0x000000 to 0x007FFF with the base address bit, EA<15> = 0, for this address range). However, Page 0 cannot be accessed through the upper 32 Kbytes, 0x8000 to 0xFFFF, of base Data Space in combination with DSRPAG = 0x00. Consequently, DSRPAG is initialized to 0x001 at Reset.

Note 1:	DSRPAG should not be used to access Page 0. An EDS access with DSRPAG set to 0x000 will generate an address error trap.
2:	Clearing the DSRPAG in software has no effect.

The remaining PSV pages are only accessible using the DSRPAG register in combination with the upper 32 Kbytes, 0x8000 to 0xFFFF, of the base address, where base address bit, EA<15> = 1.

4.2.4.3 Software Stack

The W15 register serves as a dedicated Software Stack Pointer (SSP), and is automatically modified by exception processing, subroutine calls and returns; however, W15 can be referenced by any instruction in the same manner as all other W registers. This simplifies reading, writing and manipulating the Stack Pointer (for example, creating stack frames).

Note:	To protect against misaligned stack accesses, W15<0> is fixed to '0' by the hardware.

W15 is initialized to 0x1000 during all Resets. This address ensures that the SSP points to valid RAM in all dsPIC33CH128MP508S1 devices and permits stack availability for non-maskable trap exceptions. These can occur before the SSP is initialized by the user software. You can reprogram the SSP during initialization to any location within Data Space.

The Software Stack Pointer always points to the first available free word and fills the software stack, working from lower toward higher addresses. Figure 4-8 illustrates how it pre-decrements for a stack pop (read) and post-increments for a stack push (writes).

When the PC is pushed onto the stack, PC<15:0> are pushed onto the first available stack word, then PC<22:16> are pushed into the second available stack location. For a PC push during any CALL instruction, the MSB of the PC is zero-extended before the push, as shown in Figure 4-8. During exception processing, the MSB of the PC is concatenated with the lower 8 bits of the CPU STATUS Register, SR. This allows the contents of SRL to be preserved automatically during interrupt processing.

Note 1:	To maintain system Stack Pointer (W15) coherency, W15 is never subject to (EDS) paging, and is therefore, restricted to an address range of 0x0000 to 0xFFFF. The same applies to W14 when used as a Stack Frame Pointer (SFA = 1).
2:	As the stack can be placed in, and can access X and Y spaces, care must be taken regarding its use, particularly with regard to local automatic variables in a C development environment

FIGURE 4-8: CALL STACK FRAME

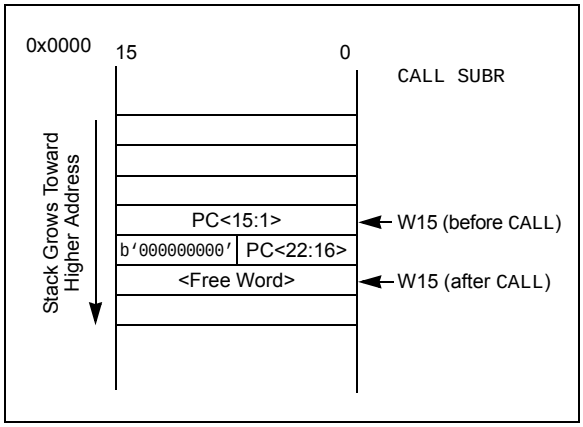

4.2.5 INSTRUCTION ADDRESSING MODES

The addressing modes shown in Table 4-17 form the basis of the addressing modes optimized to support the specific features of individual instructions. The addressing modes provided in the MAC class of instructions differ from those in the other instruction types.

4.2.5.1 File Register Instructions

Most file register instructions use a 13-bit address field (f) to directly address data present in the first 8192 bytes of data memory (Near Data Space). Most file register instructions employ a Working register, W0, which is denoted as WREG in these instructions. The destination is typically either the same file register or WREG (with the exception of the MUL instruction), which writes the result to a register or register pair. The MOV instruction allows additional flexibility and can access the entire Data Space.

4.2.5.2 MCU Instructions

The three-operand MCU instructions are of the form:

```
Operand 3 = Operand 1 <function> Operand 2
```

where Operand 1 is always a Working register (that is, the addressing mode can only be Register Direct), which is referred to as Wb. Operand 2 can be a W register fetched from data memory or a 5-bit literal. The result location can either be a W register or a data memory location. The following addressing modes are supported by MCU instructions:

- Register Direct
- Register Indirect
- Register Indirect Post-Modified
- Register Indirect Pre-Modified
- 5-Bit or 10-Bit Literal

Note: Not all instructions support all the addressing modes given above. Individual instructions can support different subsets of these addressing modes.

TABLE 4-17: FUNDAMENTAL ADDRESSING MODES SUPPORTED

Addressing Mode	Description
File Register Direct	The address of the file register is specified explicitly.
Register Direct	The contents of a register are accessed directly.
Register Indirect	The contents of Wn form the Effective Address (EA).
Register Indirect Post-Modified	The contents of Wn form the EA. Wn is post-modified (incremented or decremented) by a constant value.
Register Indirect Pre-Modified	Wn is pre-modified (incremented or decremented) by a signed constant value to form the EA.
Register Indirect with Register Offset (Register Indexed)	The sum of Wn and Wb forms the EA.
Register Indirect with Literal Offset	The sum of Wn and a literal forms the EA.

© 2017-2018 Microchip Technology Inc.

4.2.5.3 Move and Accumulator Instructions

Move instructions, and the DSP accumulator class of instructions, provide a greater degree of addressing flexibility than other instructions. In addition to the addressing modes supported by most MCU instructions, move and accumulator instructions also support Register Indirect with Register Offset Addressing mode, also referred to as Register Indexed mode.

> **Note:** For the MOV instructions, the addressing mode specified in the instruction can differ for the source and destination EA. However, the 4-bit Wb (Register Offset) field is shared by both source and destination (but typically only used by one).

In summary, the following addressing modes are supported by move and accumulator instructions:

- Register Direct
- Register Indirect
- Register Indirect Post-Modified
- Register Indirect Pre-Modified
- Register Indirect with Register Offset (Indexed)
- Register Indirect with Literal Offset
- 8-Bit Literal
- 16-Bit Literal

> **Note:** Not all instructions support all the addressing modes given above. Individual instructions may support different subsets of these addressing modes.

4.2.5.4 MAC Instructions

The dual source operand DSP instructions (CLR, ED, EDAC, MAC, MPY, MPY.N, MOVSAC and MSC), also referred to as MAC instructions, use a simplified set of addressing modes to allow the user application to effectively manipulate the Data Pointers through register indirect tables.

The two-source operand prefetch registers must be members of the set {W8, W9, W10, W11}. For data reads, W8 and W9 are always directed to the X RAGU, and W10 and W11 are always directed to the Y AGU. The Effective Addresses generated (before and after modification) must therefore, be valid addresses within X Data Space for W8 and W9, and Y Data Space for W10 and W11.

> **Note:** Register Indirect with Register Offset Addressing mode is available only for W9 (in X space) and W11 (in Y space).

In summary, the following addressing modes are supported by the MAC class of instructions:

- Register Indirect
- Register Indirect Post-Modified by 2
- Register Indirect Post-Modified by 4
- Register Indirect Post-Modified by 6
- Register Indirect with Register Offset (Indexed)

4.2.5.5 Other Instructions

Besides the addressing modes outlined previously, some instructions use literal constants of various sizes. For example, BRA (branch) instructions use 16-bit signed literals to specify the branch destination directly, whereas the DISI instruction uses a 14-bit unsigned literal field. In some instructions, such as ULNK, the source of an operand or result is implied by the opcode itself. Certain operations, such as a NOP, do not have any operands.

4.2.6 MODULO ADDRESSING

Modulo Addressing mode is a method of providing an automated means to support circular data buffers using hardware. The objective is to remove the need for software to perform data address boundary checks when executing tightly looped code, as is typical in many DSP algorithms.

Modulo Addressing can operate in either Data or Program Space (since the Data Pointer mechanism is essentially the same for both). One circular buffer can be supported in each of the X (which also provides the pointers into Program Space) and Y Data Spaces. Modulo Addressing can operate on any W Register Pointer. However, it is not advisable to use W14 or W15 for Modulo Addressing since these two registers are used as the Stack Frame Pointer and Stack Pointer, respectively.

In general, any particular circular buffer can be configured to operate in only one direction, as there are certain restrictions on the buffer start address (for incrementing buffers) or end address (for decrementing buffers), based upon the direction of the buffer.

The only exception to the usage restrictions is for buffers that have a power-of-two length. As these buffers satisfy the start and end address criteria, they can operate in a Bidirectional mode (that is, address boundary checks are performed on both the lower and upper address boundaries).

4.2.6.1 Start and End Address

The Modulo Addressing scheme requires that a starting and ending address be specified and loaded into the 16-bit Modulo Buffer Address registers: XMODSRT, XMODEND, YMODSRT and YMODEND (see Table 4-1).

> **Note:** Y space Modulo Addressing EA calculations assume word-sized data (LSb of every EA is always clear).

The length of a circular buffer is not directly specified. It is determined by the difference between the corresponding start and end addresses. The maximum possible length of the circular buffer is 32K words (64 Kbytes).

4.2.6.2 W Address Register Selection

The Modulo and Bit-Reversed Addressing Control register, MODCON<15:0>, contains enable flags, as well as a W register field to specify the W Address registers. The XWM and YWM fields select the registers that operate with Modulo Addressing:

- If XWM = `1111`, X RAGU and X WAGU Modulo Addressing is disabled
- If YWM = `1111`, Y AGU Modulo Addressing is disabled

The X Address Space Pointer W (XWM) register, to which Modulo Addressing is to be applied, is stored in MODCON<3:0> (see Table 4-1). Modulo Addressing is enabled for X Data Space when XWM is set to any value other than ‘`1111`’ and the XMODEN bit is set (MODCON<15>).

The Y Address Space Pointer W (YWM) register, to which Modulo Addressing is to be applied, is stored in MODCON<7:4>. Modulo Addressing is enabled for Y Data Space when YWM is set to any value other than ‘`1111`’ and the YMODEN bit (MODCON<14>) is set.

FIGURE 4-9: MODULO ADDRESSING OPERATION EXAMPLE

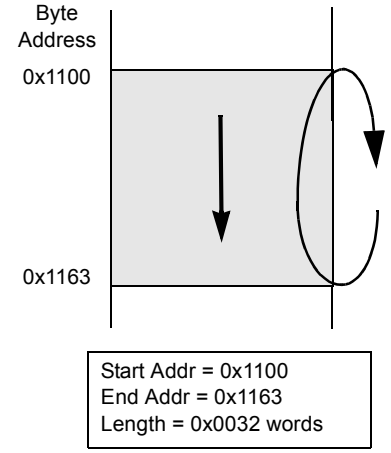


```
MOV     #0x1100, W0
MOV     W0, XMODSRT     ;set modulo start address
MOV     #0x1163, W0
MOV     W0, MODEND      ;set modulo end address
MOV     #0x8001, W0
MOV     W0, MODCON      ;enable W1, X AGU for modulo

MOV     #0x0000, W0     ;W0 holds buffer fill value

MOV     #0x1110, W1     ;point W1 to buffer

DO      AGAIN, #0x31    ;fill the 50 buffer locations
MOV     W0, [W1++]      ;fill the next location
AGAIN:  INC W0, W0      ;increment the fill value
```


© 2017-2018 Microchip Technology Inc.

4.2.6.3 Modulo Addressing Applicability

Modulo Addressing can be applied to the Effective Address (EA) calculation associated with any W register. Address boundaries check for addresses equal to:

- The upper boundary addresses for incrementing buffers
- The lower boundary addresses for decrementing buffers

It is important to realize that the address boundaries check for addresses less than, or greater than, the upper (for incrementing buffers) and lower (for decrementing buffers) boundary addresses (not just equal to). Address changes can, therefore, jump beyond boundaries and still be adjusted correctly.

Note:	The modulo corrected Effective Address is written back to the register only when Pre-Modify or Post-Modify Addressing mode is used to compute the Effective Address. When an address offset (such as [W7 + W2]) is used, Modulo Addressing correction is performed, but the contents of the register remain unchanged.

4.2.7 BIT-REVERSED ADDRESSING

Bit-Reversed Addressing mode is intended to simplify data reordering for radix-2 FFT algorithms. It is supported by the X AGU for data writes only.

The modifier, which can be a constant value or register contents, is regarded as having its bit order reversed. The address source and destination are kept in normal order. Thus, the only operand requiring reversal is the modifier.

4.2.7.1 Bit-Reversed Addressing Implementation

Bit-Reversed Addressing mode is enabled in any of these situations:

- BWMx bits (W register selection) in the MODCON register are any value other than ‘1111’ (the stack cannot be accessed using Bit-Reversed Addressing)
- The BREN bit is set in the XBREV register
- The addressing mode used is Register Indirect with Pre-Increment or Post-Increment

If the length of a bit-reversed buffer is $M = 2^N$ bytes, the last ‘N’ bits of the data buffer start address must be zeros.

XB<14:0> is the Bit-Reversed Addressing modifier, or ‘pivot point’, which is typically a constant. In the case of an FFT computation, its value is equal to half of the FFT data buffer size.

Note:	All bit-reversed EA calculations assume word-sized data (LSb of every EA is always clear). The XB value is scaled accordingly to generate compatible (byte) addresses.

When enabled, Bit-Reversed Addressing is executed only for Register Indirect with Pre-Increment or Post-Increment Addressing and word-sized data writes. It does not function for any other addressing mode or for byte-sized data and normal addresses are generated instead. When Bit-Reversed Addressing is active, the W Address Pointer is always added to the address modifier (XB) and the offset associated with the Register Indirect Addressing mode is ignored. In addition, as word-sized data is a requirement, the LSb of the EA is ignored (and always clear).

Note:	Modulo Addressing and Bit-Reversed Addressing can be enabled simultaneously using the same W register, but Bit-Reversed Addressing operation will always take precedence for data writes when enabled.

If Bit-Reversed Addressing has already been enabled by setting the BREN (XBREV<15>) bit, a write to the XBREV register should not be immediately followed by an indirect read operation using the W register that has been designated as the Bit-Reversed Pointer.

FIGURE 4-10: BIT-REVERSED ADDRESSING EXAMPLE

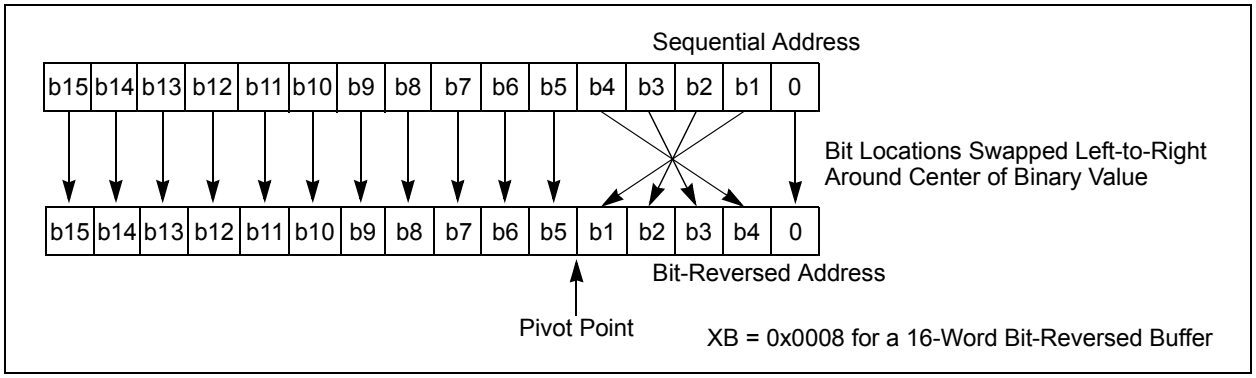

TABLE 4-18: BIT-REVERSED ADDRESSING SEQUENCE (16-ENTRY)

Normal Address					Bit-Reversed Address				
A3	A2	A1	A0	Decimal	A3	A2	A1	A0	Decimal
0	0	0	0	0	0	0	0	0	0
0	0	0	1	1	1	0	0	0	8
0	0	1	0	2	0	1	0	0	4
0	0	1	1	3	1	1	0	0	12
0	1	0	0	4	0	0	1	0	2
0	1	0	1	5	1	0	1	0	10
0	1	1	0	6	0	1	1	0	6
0	1	1	1	7	1	1	1	0	14
1	0	0	0	8	0	0	0	1	1
1	0	0	1	9	1	0	0	1	9
1	0	1	0	10	0	1	0	1	5
1	0	1	1	11	1	1	0	1	13
1	1	0	0	12	0	0	1	1	3
1	1	0	1	13	1	0	1	1	11
1	1	1	0	14	0	1	1	1	7
1	1	1	1	15	1	1	1	1	15

© 2017-2018 Microchip Technology Inc.

4.2.8 INTERFACING PROGRAM AND DATA MEMORY SPACES

The dsPIC33CH128MP508S1 family architecture uses a 24-bit wide Program Space (PS) and a 16-bit wide Data Space (DS). The architecture is also a modified Harvard scheme, meaning that data can also be present in the Program Space. To use this data successfully, it must be accessed in a way that preserves the alignment of information in both spaces.

Aside from normal execution, the architecture of the dsPIC33CH128MP508S1 family devices provides two methods by which Program Space can be accessed during operation:

- Using table instructions to access individual bytes or words anywhere in the Program Space
- Remapping a portion of the Program Space into the Data Space (Program Space Visibility)

Table instructions allow an application to read or write to small areas of the program memory. This capability makes the method ideal for accessing data tables that need to be updated periodically. It also allows access to all bytes of the program word. The remapping method allows an application to access a large block of data on a read-only basis, which is ideal for look-ups from a large table of static data. However, this method only provides visibility to the lower 16 bits in each location addressed.

TABLE 4-19: PROGRAM SPACE ADDRESS CONSTRUCTION

Access Type	Access Space	Program Space Address				
		<23>	<22:16>	<15>	<14:1>	<0>
Instruction Access (Code Execution)	User	0	PC<22:1>			0
		0xxx xxxx xxxx xxxx xxxx xxx0				
TBLRD/TBLWT (Byte/Word Read/Write)	User	TBLPAG<7:0>		Data EA<15:0>		
		0xxx xxxx		xxxx xxxx xxxx xxxx		

FIGURE 4-11: DATA ACCESS FROM PROGRAM SPACE ADDRESS GENERATION

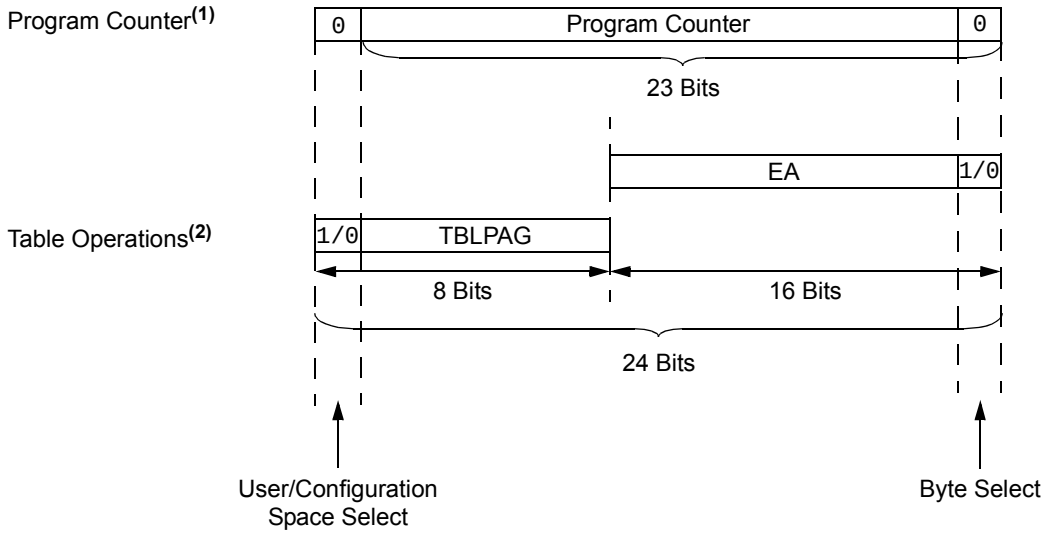

Note 1: The Least Significant bit (LSb) of Program Space addresses is always fixed as '0' to maintain word alignment of data in the Program and Data Spaces.

2: Table operations are not required to be word-aligned. Table Read operations are permitted in the configuration memory space.

4.2.8.1 Data Access from Program Memory Using Table Instructions

The TBLRDL and TBLWTL instructions offer a direct method of reading or writing the lower word of any address within the Program Space without going through Data Space. The TBLRDH and TBLWTH instructions are the only method to read or write the upper eight bits of a Program Space word as data.

This allows program memory addresses to directly map to Data Space addresses. Program memory can thus be regarded as two 16-bit wide word address spaces, residing side by side, each with the same address range. TBLRDL and TBLWTL access the space that contains the least significant data word. TBLRDH and TBLWTH access the space that contains the upper data byte.

Two table instructions are provided to read byte or word-sized (16-bit) data from Program Space. Both function as either byte or word operations.

- TBLRDL (Table Read Low):
  - In Word mode, this instruction maps the lower word of the Program Space location (P<15:0>) to a data address (D<15:0>).
  - In Byte mode, either the upper or lower byte of the lower program word is mapped to the lower byte of a data address. The upper byte is selected when Byte Select is '1'; the lower byte is selected when it is '0'.
- TBLRDH (Table Read High):
  - In Word mode, this instruction maps the entire upper word of a program address (P<23:16>) to a data address. The 'phantom' byte (D<15:8>) is always '0'.
  - In Byte mode, either the upper or lower byte of the upper program word is mapped to the lower byte of a data address. The upper byte is selected when Byte Select is '1'; the lower byte is selected when it is '0'. When the upper byte is selected, the 'phantom' byte is read as '0'.

In a similar fashion, two table instructions, TBLWTH and TBLWTL, are used to write individual bytes or words to a Program Space address. For these writes, data is written to a set of NVM latches and subsequently copied to the Program Space address using an NVM write operation. The details of their operation are explained in **Section 4.3.2 "RTSP Operation"**.

FIGURE 4-12: ACCESSING PROGRAM MEMORY WITH TABLE INSTRUCTIONS

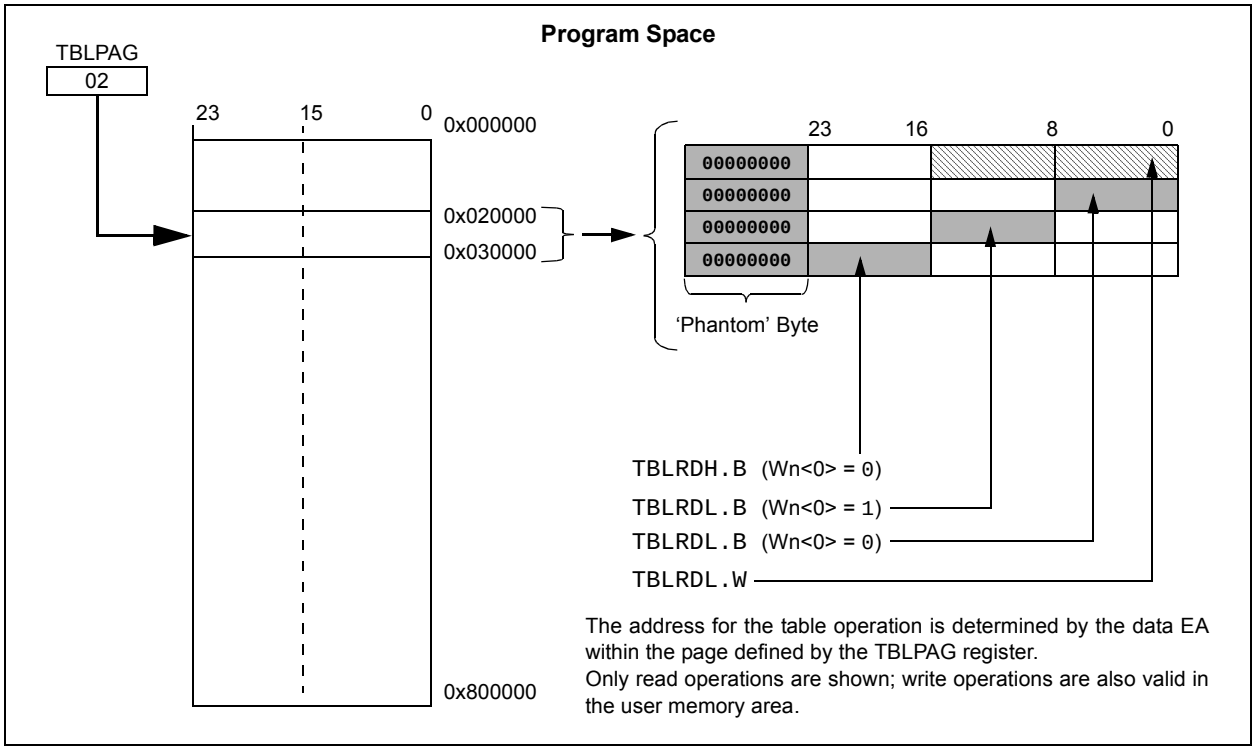

© 2017-2018 Microchip Technology Inc.

4.3 Slave PRAM Program Memory

Note 1: This data sheet summarizes the features of the dsPIC33CH128MP508 family of devices. It is not intended to be a comprehensive reference source. To complement the information in this data sheet, refer to **"Dual Partition Flash Program Memory"** (DS70005156) in the *"dsPIC33/PIC24 Family Reference Manual"*, which is available from the Microchip web site (www.microchip.com)

2: Though the reference to the chapter is **"Dual Partition Flash Program Memory"** (DS70005156), the program memory for the Slave code is PRAM. Therefore, after each POR, the Master will have to reload the content of the Slave PRAM.

The dsPIC33CH128MP508S1 family devices contain internal PRAM program memory for storing and executing application code. The PRAM program memory array is organized into rows of 128 instructions or 64 double instruction words. Though the PRAM is volatile, it is writable during normal operation over the entire VDD range.

PRAM memory can be programmed in three ways:

- In-Circuit Serial Programming™ (ICSP™)
- Run-Time Self-Programming (RTSP)
- Master to Slave Image Loading (MSIL)

ICSP allows for a dsPIC33CH128MP508S1 family device to be serially programmed in the application circuit. Since the Slave PRAM is volatile, Slave PRAM ICSP programming is supported only as a development and debugging feature.

RTSP allows the Slave PRAM user application code to update itself during run time. This feature is capable of writing a single program memory word (two instructions) or an entire row as needed.

Master to Slave Image Loading allows the Master user code to load the Slave PRAM at run time. A Slave PRAM compatible image is stored in Master Flash memory. At run time, the Master user code is responsible for loading and verifying the contents of the Slave PRAM.

Note: In an actual application mode, the Slave PRAM is loaded by the Master, so the ICSP mode of PRAM operation is valid only for the Debug mode during the code development.

4.3.1 PRAM PROGRAMMING OPERATIONS

For ICSP and RTSP programming of the Slave PRAM, `TBLWTL` and `TBLWTH` instructions are used to write to the NVM write latches. An NVM write operation then writes the contents of both latches to the PRAM, starting at the address defined in the NVMADR and NVMADRU registers.

For Master to Slave Image Loading (MSIL) of the Slave PRAM, the Master user code is responsible for transferring the Slave image contents stored in the Master Flash to the Slave PRAM. The `LDSLV` instruction is used along with the DSRPAG and DSWPAG registers to transfer a single 24-bit instruction to the Slave PRAM.

The `VFSLV` instruction allows the Master user code to verify that the PRAM has been loaded correctly.

Note: Master to Slave Image Loading is the only supported method for programming the Slave PRAM in a final user application.

Regardless of the method used to program the PRAM, a few basic requirements should be met:

- A full 48-bit double instruction word should always be programmed to a PRAM location. Either instruction may simply be a `NOP` to fulfill this requirement. This ensures a valid ECC value is generated for each pair of instructions written.
- Assuming the above step is followed, the last 24-bit location in implemented program space, or prior to any unprogrammed region in program space, should never be executed. The penultimate instruction in either case must contain a program flow change instruction, such as a `RETURN` or a `BRA` instruction.

FIGURE 4-13: ADDRESSING FOR TABLE REGISTERS

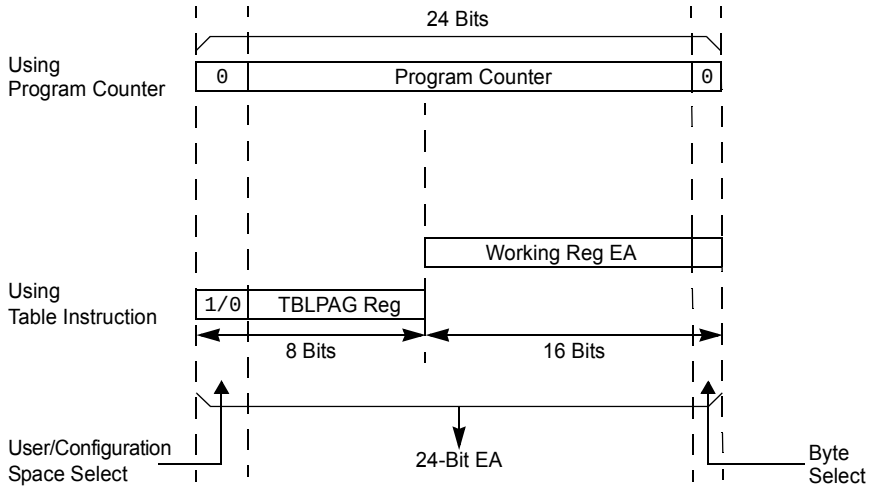

© 2017-2018 Microchip Technology Inc.

4.3.2 RTSP OPERATION

RTSP allows the user application to program one double instruction word, or one row, at a time.

The double instruction word write blocks and single row write blocks are edge-aligned, from the beginning of program memory, on boundaries of one double instruction word and 64 double instruction words, respectively.

> **Note:** Because the PRAM is volatile, RTSP writes that change the Slave PRAM user code will be lost when the device is powered down. For persistent changes to Slave PRAM user code, the Slave image in the Master Flash should be updated.

The basic sequence for RTSP programming is to first load two 24-bit instructions into the NVM write latches found in configuration memory space. Refer to Figure 4-3 for write latch addresses. Then, the WR bit in the NVMCON register is set to initiate the write process. The processor stalls (waits) until the programming operation is finished. The WR bit is automatically cleared when the operation is finished. All program operations may optionally use the NVM interrupt to signal the successful completion of the operation.

Double instruction word writes are performed by manually loading both write latches, using `TBLWTL` and `TBLWTH` instructions, and then initiating the NVM write while the NVMOP<3:0> bits (NVMCON<3:0>) are set to '`0x1`'. The program space destination address is defined by the NVMADR/U registers.

EXAMPLE 4-1: PRAM WRITE/READ

```
//Sample code for PRAM write
// Writing 0x777777 to location 0x3000
    NVMCON = 0x4001;
    TBLPAG = 0xFA;                    // write latch upper address
    NVMADR = 0x3000;                  // set target write address of general segment
    NVMADRU = 0x0000;
    __builtin_tblwtl(0, 0x7777);      // load write latches
    __builtin_tblwth (0,0x77);

    __builtin_tblwtl(2, 0x7777);      // load write latches
    __builtin_tblwth (2,0x77);

    asm volatile ("disi #5");
    __builtin_write_NVM();

    while(_WR == 1 ) ;
// Sample code for reading address location 0x3000
//readDataL /readDataLH need to be defined as variables.
    TBLPAG = 0x0000;
    readDataL = __builtin_tblrdl(0x3000);
    readDataH = __builtin_tblrdh(0x0000);
```

Row programming is performed by first loading 128 instructions into data RAM and then loading the address of the first instruction in that row into the NVMSRCADRL/H register. Once the write has been initiated, the device will automatically load two instructions into the write latches, and write them to the program space destination address defined by the NVMADR/U registers.

The operation will increment the NVMSRCADRL/H and the NVMADR/U registers until all double instruction words have been programmed.

The RPDF bit (NVMCON<9>) selects the format of the stored data in RAM to be either compressed or uncompressed. See Figure 4-14 for data formatting. Compressed data helps to reduce the amount of required RAM by using the upper byte of the second word for the MSB of the second instruction.

FIGURE 4-14: UNCOMPRESSED/ COMPRESSED FORMAT

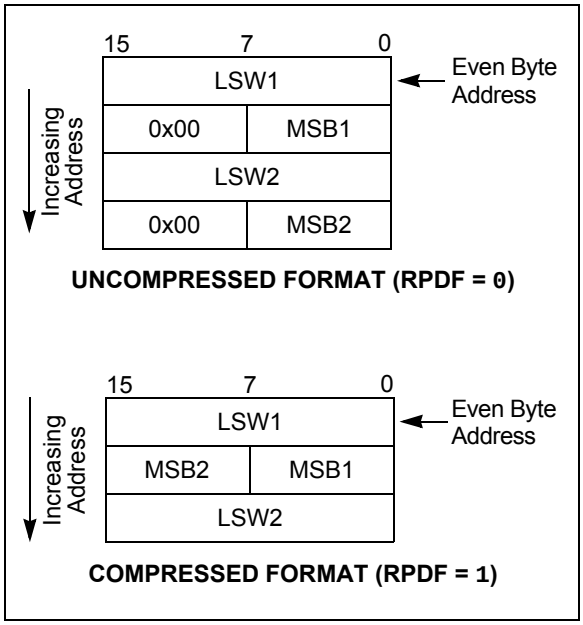

4.3.3 MASTER TO SLAVE IMAGE LOADING (MSIL)

Master to Slave Image Loading allows the Master user application code to transfer the Slave image stored in the Master Flash to the Slave PRAM. This is the only supported method for programming the Slave PRAM in a final user application.

The `LDSLV` instruction is executed by the Master user application to transfer a single 24-bit instruction from the Master Flash address, defined by Ws<14:0> (DSRPAG), to the Slave PRAM address, defined by Wd<14:0> (DSWPAG).

The `LDSLV` instruction should be executed in pairs to ensure correct ECC value generation for each double instruction word that is loaded into the Slave PRAM. The Slave image instruction found at a given even address should be loaded first. This will be the lower instruction word of a 48-bit double instruction word. The upper instruction word should then be loaded from the following odd address. After the pair of `LDSLV` instructions is executed by the Master user application, both 24-bit Slave image instructions and the generated 7-bit ECC value are actually loaded into the PRAM destination address locations.

The `VFSLV` instruction allows the Master user application to verify that the PRAM has been loaded correctly. The `VFSLV` instruction compares the 24-bit instruction word stored in the Master Flash address, defined by Ws<14:0> (DSRPAG), to the 24 bit instruction written to the Slave PRAM address, defined by Wd<14:0> (DSWPAG).

The `VFSLV` instruction should also be executed in pairs. The lower instruction word found on a given even address should be verified first. The upper instruction word found in the following odd address should then be verified. Then, the Slave image instruction pair read from the Master Flash will have a valid generated ECC value. This full double instruction word with ECC is then compared to the 55-bit value that was actually loaded into the PRAM destination locations. The entire Slave image may be loaded into the PRAM first and then subsequently verified. To make this process simpler, the Microchip `libpic30.h` library has implemented a routine which can be called once to either load or verify the entire Slave image.

The `__program_slave(core#, verify, &slave_image)` routine uses the “verify” parameter to determine if the routine will run using `LDSLV` instructions or `VFSLV` instructions. A ‘`0`’ will load the entire Slave image to the PRAM and a ‘`1`’ will verify the entire Slave image in the PRAM. An example of how this routine may be used to load and verify the contents of the Slave PRAM is shown in Example 4-2.

© 2017-2018 Microchip Technology Inc.

EXAMPLE 4-2: SLAVE PRAM LOAD AND VERIFY ROUTINE

```
#include <libpic30.h>
//__program_slave(core#, verify, &slave_image)
if (__program_slave(1, 0, &slave) == 0)
{
  /* now verify */
  if (__program_slave(1, 1, &slave) ==
  ESLV_VERIFY_FAIL)
  {
       asm("reset");   // try again
  }
}
```

The `__program_slave(core#, verify, &slave_image)` routine only supports Slave images created with a compatible Microchip language tools format. Slave PRAM images not following this format will require a custom routine that follows all requirements for the PRAM Master to Slave image loading process described in this chapter.

4.3.4 PRAM DUAL PARTITION CONSIDERATIONS

For dsPIC33CH128MP508S1 family devices operating in Dual Partition PRAM Program Memory modes, both partitions would be loaded using the Master to Slave image loading process. The Master can load the active partition of the PRAM only when SLVEN = `0` (Slave is not running). The Master can load the PRAM Inactive Partition any time. To support LiveUpdate, the Master would load the PRAM Inactive Partition while the Slave is running and then the Slave would execute the `BOOTSWP` instruction to swap partitions.

4.3.4.1 PRAM Partition Swapping

At device Reset, the default PRAM partition is Partition 1. The `BOOTSWP` instruction provides the means of swapping the Active and Inactive Partitions (soft swap) without the need for a device Reset. The `BOOTSWP` must always be followed by a `GOTO` instruction. The `BOOTSWP` instruction swaps the Active and Inactive Partitions, and the PC vectors to the location specified by the `GOTO` instruction in the newly Active Partition.

It is important to note that interrupts should temporarily be disabled while performing the soft swap sequence, and that after the partition swap, all peripherals and interrupts which were enabled remain enabled. Additionally, the RAM and stack will maintain their state after the switch. As a result, it is recommended that applications using soft swaps jump to a routine that will reinitialize the device in order to ensure the firmware runs as expected. The Configuration registers will have no effect during a soft swap.

For robustness of operation, in order to execute the `BOOTSWP` instruction, it is necessary to execute the NVM unlocking sequence as follows:

1. Write 0x55 to NVMKEY.
2. Write 0xAA to NVMKEY.
3. Execute the `BOOTSWP` instruction.

If the unlocking sequence is not performed, the `BOOTSWP` instruction will be executed as a forced `NOP` and a `GOTO` instruction, following the `BOOTSWP` instruction, will be executed, causing the PC to jump to that location in the current operating partition.

The SFTSWP and P2ACTIV bits in the NVMCON register are used to determine a successful swap of the Active and Inactive Partitions, as well as which partition is active. After the `BOOTSWP` and `GOTO` instructions, the SFTSWP bit should be polled to verify the partition swap has occurred and then cleared for the next panel swap event.

4.3.4.2 Dual Partition Modes

While operating in Dual Partition mode, the dsPIC33CH128MP508S1 family devices have the option for both partitions to have their own defined security segments, as shown in Figure .

Alternatively, the device can operate in Protected Dual Partition mode, where Partition 1 becomes permanently write-protected. Protected Dual Partition mode allows for a “Factory Default” mode, which provides a fail-safe backup image to be stored in Partition 1.

4.3.5 ERROR CORRECTING CODE (ECC)

In order to improve program memory performance and durability, the devices include Error Correcting Code (ECC) functionality as an integral part of the PRAM memory controller. ECC can determine the presence of single bit errors in program data, including which bit is in error, and correct the data automatically without user intervention. ECC cannot be disabled.

When data is written to program memory, ECC generates a 7-bit Hamming code parity value for every two (24-bit) instruction words. The data is stored in blocks of 48 data bits and seven parity bits; parity data is not memory-mapped and is inaccessible. When the data is read back, the ECC calculates the parity on it and compares it to the previously stored parity value. If a parity mismatch occurs, there are two possible outcomes:

- Single bit error has occurred and has been automatically corrected on readback.
- Double-bit error has occurred and the read data is not changed.

Single bit error occurrence can be identified by the state of the ECCSBEIF bit (IFS0<13>). An interrupt can be generated when the corresponding interrupt enable bit is set, ECCSBEIE (IEC0<13>). The ECCSTATL register contains the parity information for single bit errors. The SECOUT<7:0> bits field contains the expected calculated SEC parity and the SECIN<7:0> bits contain the actual value from a PRAM read operation. The SECSYNDx bits (ECCSTATH<7:0>) indicate the bit position of the single bit error within the 48-bit pair of instruction words. When no error is present, SECINx equals SECOUTx and SECSYNDx is zero.

Double-bit errors result in a generic hard trap. The ECCDBE bit (INTCON4<1>) will set to identify the source of the hard trap. If no Interrupt Service Routine is implemented for the hard trap, a device Reset will also occur. The ECCSTATH register contains double-bit error status information. The DEDOUT bit is the expected calculated DED parity and DEDIN is the actual value from a Flash read operation. When no error is present, DEDIN equals DEDOUT.

4.3.5.1 ECC FAULT INJECTION

To test Fault handling, an EEC error can be generated. Both single and double-bit errors can be generated in both the read and write data paths. Read path Fault injection first reads the Flash data and then modifies it prior to entering the ECC logic. Write path Fault injection modifies the actual data prior to it being written into the target PRAM and will cause an EEC error on a subsequent Flash read. The following procedure is used to inject a Fault:

1. Load the Flash target address into the ECCADDR register.
2. Select 1st Fault bit determined by FLT1PTRx (ECCCONH<7:0>). The target bit is inverted to create the Fault.
3. If a double Fault is desired, select the 2nd Fault bit determined by FLT2PTRx (ECCCONH<15:8>), otherwise set to all ‘1’s.
4. Write the NVMKEY unlock sequence.
5. Enable the ECC Fault injection logic by setting FLTINJ bit (ECCCONL<0>).
6. Perform a read or write to the Flash target address.

4.3.6 CONTROL REGISTERS

Six SFRs are used to support ICSP and RTSP PRAM write operations: NVMCON, NVMKEY, NVMADR, NVMADRU, NVMSRCADRL and NVMSRCADRH.

The NVMCON register (Register 4-4) selects the operation to be performed (double-word write or row write) and initiates the program cycle.

NVMKEY (Register 4-7) is a write-only register that is used for write protection. To start a programming sequence, the user application must consecutively write 0x55 and 0xAA to the NVMKEY register.

There are two NVM Address registers: NVMADRU and NVMADR. These two registers, when concatenated, form the 24-bit Effective Address (EA) of the selected word/row for programming operation. The NVMADRU register is used to hold the upper eight bits of the EA, while the NVMADR register is used to hold the lower 16 bits of the EA.

For row programming (RTSP operation only), data to be written to the Slave PRAM is written into Slave data memory space (RAM) at an address defined by the NVMSRCADRL/H registers (location of first element in row programming data).

For Master to Slave image loading, the DSRPAG and DSWPAG SFR registers are used in conjunction with the Ws and Wd Working registers to create the source and destination addresses for `LDSLV` and `VFSLV` instruction operations.

© 2017-2018 Microchip Technology Inc.

4.3.7 SLAVE PROGRAM MEMORY CONTROL/STATUS REGISTERS

REGISTER 4-4: NVMCON: PROGRAM MEMORY SLAVE CONTROL REGISTER

R/SO-0(1)	R/W-0(1)	R/W-0(1)	R/W-0	R/C-0	R/C-0	R/W-0	R/C-0
WR	WREN	WRERR	NVMSIDL(2)	SFTSWP	P2ACTIV	RPDF	URERR
bit 15							bit 8

U-0	U-0	U-0	U-0	R/W-0(1)	R/W-0(1)	R/W-0(1)	R/W-0(1)
—	—	—	—	NVMOP3(3,4)	NVMOP2(3,4)	NVMOP1(3,4)	NVMOP0(3,4)
bit 7							bit 0

Legend:	C = Clearable bit	SO = Settable Only bit	
R = Readable bit	W = Writable bit	U = Unimplemented bit, read as ‘0’	
-n = Value at POR	‘1’ = Bit is set	‘0’ = Bit is cleared	x = Bit is unknown

bit 15 **WR:** Write Control bit(1)
- 1 = Initiates a PRAM memory program or erase operation; the operation is self-timed and the bit is cleared by hardware once the operation is complete
- 0 = Program or erase operation is complete and inactive

bit 14 **WREN:** Write Enable bit(1)
- 1 = Enables program/erase operations
- 0 = Inhibits program/erase operations

bit 13 **WRERR:** Write Sequence Error Flag bit(1)
- 1 = An improper program or erase sequence attempt, or termination has occurred (bit is set automatically on any set attempt of the WR bit)
- 0 = The program or erase operation completed normally

bit 12 **NVMSIDL:** PRAM Stop in Idle Control bit(2)
- 1 = PRAM voltage regulator goes into Standby mode during Idle mode
- 0 = PRAM voltage regulator is active during Idle mode

bit 11 **SFTSWP:** Soft Swap Status bit
- 1 = Panels have been successfully swapped using the BOOTSWP instruction
- 0 = Awaiting for panels to be successfully swapped using the BOOTSWP instruction

bit 10 **P2ACTIV:** Dual Boot Active Region Status bit
- 1 = Panel 2 PRAM is mapped into the active region
- 0 = Panel 1 PRAM is mapped into the active region

bit 9 **RPDF:** Row Programming Data Format bit
- 1 = Row data to be stored in PRAM is in compressed format
- 0 = Row data to be stored in PRAM is in uncompressed format

bit 8 **URERR:** Row Programming Data Underrun Error bit
- 1 = Indicates row programming operation has been terminated
- 0 = No data underrun error is detected

bit 7-4 **Unimplemented:** Read as ‘0’

Note 1: These bits can only be reset on a POR.

2: If this bit is set, there will be minimal power savings (I_{IDLE}) and upon exiting Idle mode, there is a delay (T_{VREG}) before PRAM memory becomes operational.

3: All other combinations of NVMOP<3:0> are unimplemented.

4: Execution of the PWRSAV instruction is ignored while any of the NVM operations are in progress.

5: Two adjacent words on a 4-word boundary are programmed during execution of this operation.

REGISTER 4-4: NVMCON: PROGRAM MEMORY SLAVE CONTROL REGISTER (CONTINUED)

bit 3-0 **NVMOP<3:0>:** NVM Operation Select bits(1,3,4)

1111 = Reserved
...
0101 = Reserved
0100 = Inactive Partition memory erase operation
0011 = Reserved
0010 = Reserved
0001 = Memory double-word program operation(5)
0000 = Reserved

Note 1: These bits can only be reset on a POR.

2: If this bit is set, there will be minimal power savings (IIDLE) and upon exiting Idle mode, there is a delay (TVREG) before PRAM memory becomes operational.

3: All other combinations of NVMOP<3:0> are unimplemented.

4: Execution of the PWRSAV instruction is ignored while any of the NVM operations are in progress.

5: Two adjacent words on a 4-word boundary are programmed during execution of this operation.

© 2017-2018 Microchip Technology Inc.

REGISTER 4-5: NVMADR: SLAVE PROGRAM MEMORY LOWER ADDRESS REGISTER

R/W-x	R/W-x	R/W-x	R/W-x	R/W-x	R/W-x	R/W-x	R/W-x
NVMADR<15:8>							
bit 15							bit 8

R/W-x	R/W-x	R/W-x	R/W-x	R/W-x	R/W-x	R/W-x	R/W-x
NVMADR<7:0>							
bit 7							bit 0

Legend:			
R = Readable bit	W = Writable bit	U = Unimplemented bit, read as ‘0’	
-n = Value at POR	‘1’ = Bit is set	‘0’ = Bit is cleared	x = Bit is unknown

bit 15-0 **NVMADR<15:0>:** PRAM Memory Lower Write Address bits
Selects the lower 16 bits of the location to program PRAM. This register may be read or written to by the user application.

REGISTER 4-6: NVMADRU: SLAVE PROGRAM MEMORY UPPER ADDRESS REGISTER

U-0	U-0	U-0	U-0	U-0	U-0	U-0	U-0
—	—	—	—	—	—	—	—
bit 15							bit 8

R/W-x	R/W-x	R/W-x	R/W-x	R/W-x	R/W-x	R/W-x	R/W-x
NVMADRU<23:16>							
bit 7							bit 0

Legend:			
R = Readable bit	W = Writable bit	U = Unimplemented bit, read as ‘0’	
-n = Value at POR	‘1’ = Bit is set	‘0’ = Bit is cleared	x = Bit is unknown

bit 15-8 **Unimplemented:** Read as ‘0’

bit 7-0 **NVMADRU<23:16>:** PRAM Memory Upper Write Address bits
Selects the upper eight bits of the location to program PRAM. This register may be read or written to by the user application.

REGISTER 4-7: NVMKEY: SLAVE NONVOLATILE MEMORY KEY REGISTER

U-0	U-0	U-0	U-0	U-0	U-0	U-0	U-0
—	—	—	—	—	—	—	—
bit 15							bit 8

W-0	W-0	W-0	W-0	W-0	W-0	W-0	W-0
NVMKEY<7:0>							
bit 7							bit 0

Legend:			
R = Readable bit	W = Writable bit	U = Unimplemented bit, read as ‘0’	
-n = Value at POR	‘1’ = Bit is set	‘0’ = Bit is cleared	x = Bit is unknown

bit 15-8 **Unimplemented:** Read as ‘0’

bit 7-0 **NVMKEY<7:0>:** NVM Key Register bits (write-only)

REGISTER 4-8: NVMSRCADR: SLAVE NVM SOURCE DATA ADDRESS REGISTER

R/W-0	R/W-0	R/W-0	R/W-0	R/W-0	R/W-0	R/W-0	R/W-0
NVMSRCADR<15:8>							
bit 15							bit 8

R/W-0	R/W-0	R/W-0	R/W-0	R/W-0	R/W-0	R/W-0	R/W-0
NVMSRCADR<7:0>							
bit 7							bit 0

Legend:			
R = Readable bit	W = Writable bit	U = Unimplemented bit, read as ‘0’	
-n = Value at POR	‘1’ = Bit is set	‘0’ = Bit is cleared	x = Bit is unknown

bit 15-0 **NVMSRCADR<15:0>:** NVM Source Data Address bits
The RAM address of the data to be programmed into PRAM when the NVMOP<3:0> bits are set to row programming.

© 2017-2018 Microchip Technology Inc.

4.3.8 SLAVE ECC CONTROL/STATUS REGISTERS

REGISTER 4-9: ECCCONL: ECC FAULT INJECTION CONFIGURATION REGISTER LOW

U-0	U-0	U-0	U-0	U-0	U-0	U-0	U-0
—	—	—	—	—	—	—	—
bit 15							bit 8

U-0	U-0	U-0	U-0	U-0	U-0	U-0	R/W-0
—	—	—	—	—	—	—	FLTINMJ
bit 7							bit 0

Legend:			
R = Readable bit	W = Writable bit	U = Unimplemented bit, read as ‘0’	
-n = Value at POR	‘1’ = Bit is set	‘0’ = Bit is cleared	x = Bit is unknown

bit 15-1 **Unimplemented:** Read as ‘0’

bit 0 **FLTINJ:** Fault Injection Sequence Enable bit
1 = Enabled
0 = Disabled

REGISTER 4-10: ECCCONH: ECC FAULT INJECTION CONFIGURATION REGISTER HIGH

R/W-0	R/W-0	R/W-0	R/W-0	R/W-0	R/W-0	R/W-0	R/W-0
FLT2PTR<7:0>							
bit 15							bit 8

R/W-0	R/W-0	R/W-0	R/W-0	R/W-0	R/W-0	R/W-0	R/W-0
FLT1PTR<7:0>							
bit 7							bit 0

Legend:			
R = Readable bit	W = Writable bit	U = Unimplemented bit, read as ‘0’	
-n = Value at POR	‘1’ = Bit is set	‘0’ = Bit is cleared	x = Bit is unknown

bit 15-8 **FLT2PTR<7:0>:** ECC Fault Injection Bit Pointer 2
11111111-00111000 = No Fault injection occurs
00110111 = Fault injection (bit inversion) occurs on bit 55 of ECC bit order
...
00000001 = Fault injection (bit inversion) occurs on bit 1 of ECC bit order
00000000 = Fault injection (bit inversion) occurs on bit 0 of ECC bit order

bit 7-0 **FLT1PTR<7:0>:** ECC Fault Injection Bit Pointer 1
11111111-00111000 = No Fault injection occurs
00110111 = Fault injection occurs on bit 55 of ECC bit order
...
00000001 = Fault injection occurs on bit 1 of ECC bit order
00000000 = Fault injection occurs on bit 0 of ECC bit order

REGISTER 4-11: ECCADDRL: ECC FAULT INJECT ADDRESS COMPARE REGISTER LOW

R/W-0	R/W-0	R/W-0	R/W-0	R/W-0	R/W-0	R/W-0	R/W-0
ECCADDR<15:8>							
bit 15							bit 8

R/W-0	R/W-0	R/W-0	R/W-0	R/W-0	R/W-0	R/W-0	R/W-0
ECCADDR<7:0>							
bit 7							bit 0

Legend:			
R = Readable bit	W = Writable bit	U = Unimplemented bit, read as ‘0’	
-n = Value at POR	‘1’ = Bit is set	‘0’ = Bit is cleared	x = Bit is unknown

bit 15-0 **ECCADDR<15:0>:** ECC Fault Injection Memory Address Match Compare bits

REGISTER 4-12: ECCADDRH: ECC FAULT INJECT ADDRESS COMPARE REGISTER HIGH

R/W-0	R/W-0	R/W-0	R/W-0	R/W-0	R/W-0	R/W-0	R/W-0
ECCADDR<31:24>							
bit 15							bit 8

R/W-0	R/W-0	R/W-0	R/W-0	R/W-0	R/W-0	R/W-0	R/W-0
ECCADDR<23:16>							
bit 7							bit 0

Legend:			
R = Readable bit	W = Writable bit	U = Unimplemented bit, read as ‘0’	
-n = Value at POR	‘1’ = Bit is set	‘0’ = Bit is cleared	x = Bit is unknown

bit 15-0 **ECCADDR<31:16>:** ECC Fault Injection Memory Address Match Compare bits

© 2017-2018 Microchip Technology Inc.

REGISTER 4-13: ECCSTATL: ECC SYSTEM STATUS DISPLAY REGISTER LOW

R/W-0	R/W-0	R/W-0	R/W-0	R/W-0	R/W-0	R/W-0	R/W-0
SECOUT<7:0>							
bit 15							bit 8

R/W-0	R/W-0	R/W-0	R/W-0	R/W-0	R/W-0	R/W-0	R/W-0
SECIN<7:0>							
bit 7							bit 0

Legend:	C = Clearable bit	SO = Settable Only bit	
R = Readable bit	W = Writable bit	U = Unimplemented bit, read as ‘0’	
-n = Value at POR	‘1’ = Bit is set	‘0’ = Bit is cleared	x = Bit is unknown

bit 15-8 **SECOUT<7:0>:** Calculated Single Error Correction Parity Value bits

bit 7-0 **SECIN<7:0>:** Read Single Error Correction Parity Value bits
Bits are the actual parity value of a PRAM read operation.

REGISTER 4-14: ECCSTATH: ECC SYSTEM STATUS DISPLAY REGISTER HIGH

U-0	U-0	U-0	U-0	U-0	U-0	R/W-0	R/W-0
—	—	—	—	—	—	DEDOUT	DEDIN
bit 15							bit 8

R/W-0	R/W-0	R/W-0	R/W-0	R/W-0	R/W-0	R/W-0	R/W-0
SECSYND<7:0>							
bit 7							bit 0

Legend:			
R = Readable bit	W = Writable bit	U = Unimplemented bit, read as ‘0’	
-n = Value at POR	‘1’ = Bit is set	‘0’ = Bit is cleared	x = Bit is unknown

bit 15-10 **Unimplemented:** Read as ‘0’

bit 9 **DEDOUT:** Calculated Dual Bit Error Detection Parity bit

bit 8 **DEDIN:** Read Dual Bit Error Detection Parity bit
DEDIN is the actual parity value of a PRAM read operation.

bit 7-0 **SECSYND<7:0>:** Calculated ECC Syndrome Value bits
Indicates the bit location that contains the error.

4.4 Slave Resets

Note 1: This data sheet summarizes the features of the dsPIC33CH128MP508 family of devices. It is not intended to be a comprehensive reference source. To complement the information in this data sheet, refer to **"Reset"** (DS70602) in the *"dsPIC33/PIC24 Family Reference Manual"*, which is available from the Microchip web site (www.microchip.com).

The Reset module combines all Reset sources and controls the device Master Reset Signal, $\overline{\text{SYSRST}}$. The following is a list of device Reset sources:

- POR: Power-on Reset
- BOR: Brown-out Reset
- $\overline{\text{MCLR}}$: Master Clear Pin Reset
- SWR: RESET Instruction
- WDTO: Watchdog Timer Time-out Reset
- CM: Configuration Mismatch Reset
- TRAPR: Trap Conflict Reset
- IOPUWR: Illegal Condition Device Reset
  - Illegal Opcode Reset
  - Uninitialized W Register Reset
  - Security Reset

A simplified block diagram of the Reset module is shown in Figure 4-15.

Any active source of Reset will make the $\overline{\text{SYSRST}}$ signal active. On system Reset, some of the registers associated with the CPU and peripherals are forced to a known Reset state, and some are unaffected.

Note: Refer to the specific peripheral section or **Section 4.2 "Slave Memory Organization"** of this data sheet for register Reset states.

All types of device Reset set a corresponding status bit in the RCON register to indicate the type of Reset (see Register 4-15).

A POR clears all the bits, except for the BOR and POR bits (RCON<1:0>) that are set. The user application can set or clear any bit, at any time, during code execution. The RCON bits only serve as status bits. Setting a particular Reset status bit in software does not cause a device Reset to occur.

The RCON register also has other bits associated with the Watchdog Timer and device power-saving states. The function of these bits is discussed in other sections of this data sheet.

Note: The status bits in the RCON register should be cleared after they are read so that the next RCON register value after a device Reset is meaningful.

For all Resets, the default clock source is determined by the FNOSC<2:0> bits in the FOSCSEL Configuration register. The value of the FNOSCx bits is loaded into the NOSC<2:0> (OSCCON<10:8>) bits on Reset, which in turn, initializes the system clock.

FIGURE 4-15: RESET SYSTEM BLOCK DIAGRAM

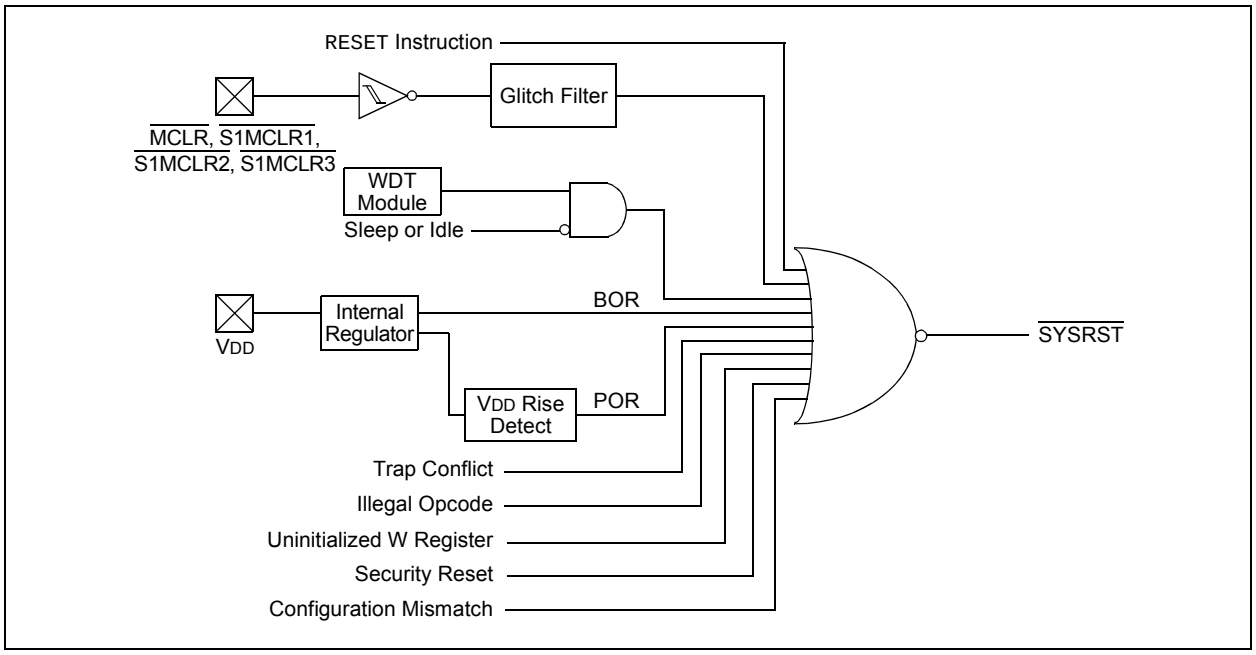

© 2017-2018 Microchip Technology Inc.

4.4.1 RESET RESOURCES

Many useful resources are provided on the main product page of the Microchip web site for the devices listed in this data sheet. This product page contains the latest updates and additional information.

4.4.1.1 Key Resources

- **"Reset"** (DS70602) in the *"dsPIC33/PIC24 Family Reference Manual"*
- Code Samples
- Application Notes
- Software Libraries
- Webinars
- All Related *"dsPIC33/PIC24 Family Reference Manual"* Sections
- Development Tools

4.4.2 SLAVE RESET CONTROL REGISTER

REGISTER 4-15: RCON: RESET CONTROL REGISTER(1)

R/W-0	R/W-0	U-0	U-0	U-0	U-0	R/W-0	R/W-0
TRAPR	IOPUWR	—	—	—	—	CM	VREGS
bit 15							bit 8

R/W-0	R/W-0	U-0	R/W-0	R/W-0	R/W-0	R/W-1	R/W-1
EXTR	SWR	—	WDTO	SLEEP	IDLE	BOR	POR
bit 7							bit 0

Legend:			
R = Readable bit	W = Writable bit	U = Unimplemented bit, read as ‘0’	
-n = Value at POR	‘1’ = Bit is set	‘0’ = Bit is cleared	x = Bit is unknown

bit 15 **TRAPR:** Trap Reset Flag bit
1 = A Trap Conflict Reset has occurred
0 = A Trap Conflict Reset has not occurred

bit 14 **IOPUWR:** Illegal Opcode or Uninitialized W Register Access Reset Flag bit
1 = An Illegal Opcode, an Illegal Address mode or Uninitialized W Register used as an Address Pointer caused a Reset
0 = An Illegal Opcode or Uninitialized W Register Reset has not occurred

bit 13-10 **Unimplemented:** Read as ‘0’

bit 9 **CM:** Configuration Mismatch Flag bit
1 = A Configuration Mismatch Reset has occurred.
0 = A Configuration Mismatch Reset has not occurred

bit 8 **VREGS:** Voltage Regulator Standby During Sleep bit
1 = Voltage regulator is active during Sleep
0 = Voltage regulator goes into Standby mode during Sleep

bit 7 **EXTR:** External Reset ($\overline{\text{MCLR}}$, $\overline{\text{S1MCLRx}}$) Pin bit
1 = A Master Clear (pin) Reset has occurred
0 = A Master Clear (pin) Reset has not occurred

bit 6 **SWR:** Software RESET (Instruction) Flag bit
1 = A RESET instruction has been executed
0 = A RESET instruction has not been executed

bit 5 **Unimplemented:** Read as ‘0’

bit 4 **WDTO:** Watchdog Timer Time-out Flag bit
1 = WDT time-out has occurred
0 = WDT time-out has not occurred

bit 3 **SLEEP:** Wake-up from Sleep Flag bit
1 = Device has been in Sleep mode
0 = Device has not been in Sleep mode

bit 2 **IDLE:** Wake-up from Idle Flag bit
1 = Device has been in Idle mode
0 = Device has not been in Idle mode

bit 1 **BOR:** Brown-out Reset Flag bit
1 = A Brown-out Reset has occurred
0 = A Brown-out Reset has not occurred

Note 1: All of the Reset status bits can be set or cleared in software. Setting one of these bits in software does not cause a device Reset.

© 2017-2018 Microchip Technology Inc.

REGISTER 4-15: RCON: RESET CONTROL REGISTER(1) (CONTINUED)

bit 0 **POR:** Power-on Reset Flag bit
`1` = A Power-on Reset has occurred
`0` = A Power-on Reset has not occurred

Note 1: All of the Reset status bits can be set or cleared in software. Setting one of these bits in software does not cause a device Reset.

4.5 Slave Interrupt Controller

Note 1: This data sheet summarizes the features of the dsPIC33CH128MP508 family of devices. It is not intended to be a comprehensive reference source. To complement the information in this data sheet, refer to **"Interrupts"** (DS70000600) in the *"dsPIC33/PIC24 Family Reference Manual"*, which is available from the Microchip web site (www.microchip.com).

The dsPIC33CH128MP508S1 family interrupt controller reduces the numerous peripheral interrupt request signals to a single interrupt request signal to the dsPIC33CH128MP508S1 family CPU.

The interrupt controller has the following features:

- Six Processor Exceptions and Software Traps
- Seven User-Selectable Priority Levels
- Interrupt Vector Table (IVT) with a Unique Vector for each Interrupt or Exception Source
- Fixed Priority within a Specified User Priority Level
- Fixed Interrupt Entry and Return Latencies

Note: There is no Alternate Interrupt Vector Table (AIVT) for the Slave.

4.5.1 INTERRUPT VECTOR TABLE

The dsPIC33CH128MP508S1 family Interrupt Vector Table (IVT), shown in Figure 4-16, resides in program memory, starting at location, 000004h. The IVT contains six non-maskable trap vectors and up to 246 sources of interrupts. In general, each interrupt source has its own vector. Each interrupt vector contains a 24-bit wide address. The value programmed into each interrupt vector location is the starting address of the associated Interrupt Service Routine (ISR).

Interrupt vectors are prioritized in terms of their natural priority. This priority is linked to their position in the vector table. Lower addresses generally have a higher natural priority. For example, the interrupt associated with Vector 0 takes priority over interrupts at any other vector address.

4.5.2 RESET SEQUENCE

A device Reset is not a true exception because the interrupt controller is not involved in the Reset process. The dsPIC33CH128MP508S1 family devices clear their registers in response to a Reset, which forces the PC to zero. The device then begins program execution at location, 0x000000. A `GOTO` instruction at the Reset address can redirect program execution to the appropriate start-up routine.

Note: Any unimplemented or unused vector locations in the IVT should be programmed with the address of a default interrupt handler routine that contains a `RESET` instruction.

© 2017-2018 Microchip Technology Inc.

FIGURE 4-16: dsPIC33CH128MP508S1 FAMILY INTERRUPT VECTOR TABLE

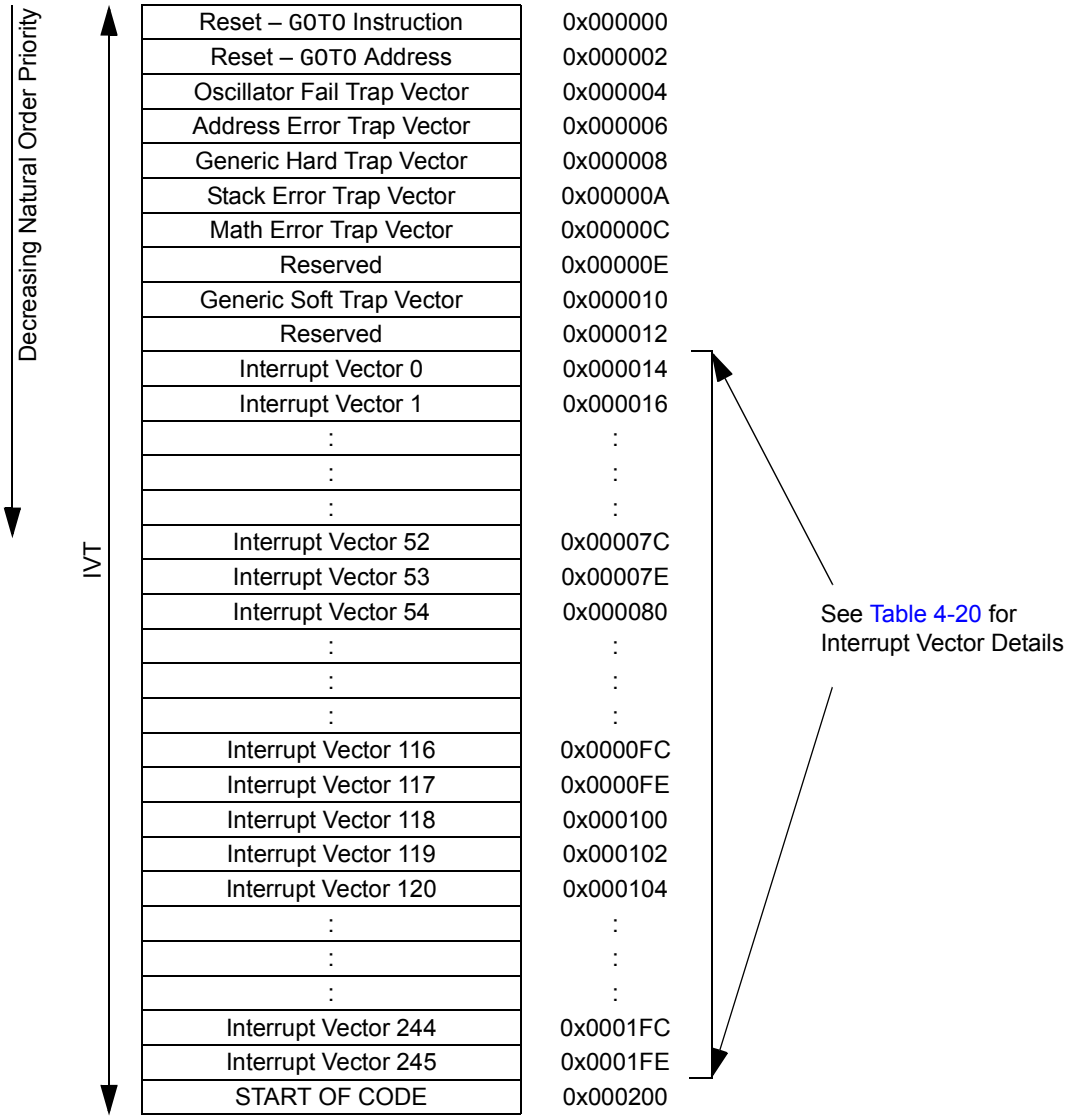

Note: In Dual Partition modes, each partition has a dedicated Interrupt Vector Table.

TABLE 4-20: SLAVE INTERRUPT VECTOR DETAILS

Interrupt Source	Vector #	IRQ #	IVT Address	Interrupt Bit Location		
				Flag	Enable	Priority
INT0 – External Interrupt 0	8	0	0x000014	IFS0<0>	IEC0<0>	IPC0<2:0>
T1 – Timer1	9	1	0x000016	IFS0<1>	IEC0<1>	IPC0<6:4>
CNA – Change Notice Interrupt A	10	2	0x000018	IFS0<2>	IEC0<2>	IPC0<10:8>
CNB – Change Notice Interrupt B	11	3	0x00001A	IFS0<3>	IEC0<3>	IPC0<14:12>
DMA0 – DMA Channel 0	12	4	0x00002C	IFS0<4>	IEC0<4>	IPC1<2:0>
Reserved	13	5	0x00002E	—	—	—
CCP1 – Input Capture/Output Compare 1	14	6	0x000020	IFS0<6>	IEC0<6>	IPC1<10:8>
CCT1 – CCP1 Timer	15	7	0x000022	IFS0<7>	IEC0<7>	IPC1<14:12>
DMA1 – DMA Channel 1	16	8	0x000024	IFS0<8>	IEC0<8>	IPC2<2:0>
SPI1RX – SPI1 Receiver	17	9	0x000026	IFS0<9>	IEC0<9>	IPC2<6:4>
SPI1TX – SPI1 Transmitter	18	10	0x000028	IFS0<10>	IEC0<10>	IPC2<10:8>
U1RX – UART1 Receiver	19	11	0x00002A	IFS0<11>	IEC0<11>	IPC2<14:12>
U1TX – UART1 Transmitter	20	12	0x00002C	IFS0<12>	IEC0<12>	IPC3<2:0>
ECCSBE – ECC Single Bit Error	21	13	0x00002E	IFS0<13>	IEC0<13>	IPC3<6:4>
NVM – NVM Write Complete	22	14	0x000030	IFS0<14>	IEC0<14>	IPC3<10:8>
INT1 – External Interrupt 1	23	15	0x000032	IFS0<15>	IEC0<15>	IPC3<14:12>
SI2C1 – I2C1 Slave Event	24	16	0x000034	IFS1<0>	IEC1<0>	IPC4<2:0>
MI2C1 – I2C1 Master Event	25	17	0x000036	IFS1<1>	IEC1<1>	IPC4<6:4>
Reserved	26	18	0x000038	—	—	—
CNC – Change Notice Interrupt C	27	19	0x00003A	IFS1<3>	IEC1<3>	IPC4<14:12>
INT2 – External Interrupt 2	28	20	0x00003C	IFS1<4>	IEC1<4>	IPC5<2:0>
Reserved	29-30	21-22	0x00003E-0x000040	—	—	—
CCP2 – Input Capture/Output Compare 2	31	23	0x000042	IFS1<7>	IEC1<7>	IPC5<14:12>
CCT2 – CCP2 Timer	32	24	0x000044	IFS1<8>	IEC1<8>	IPC6<2:0>
Reserved	33	25	0x000046	IFS1<9>	IEC1<9>	IPC6<6:4>
INT3 – External Interrupt 3	34	26	0x000048	IFS1<10>	IEC1<10>	IPC6<10:8>
Reserved	35-42	27-34	0x00004A-0x000058	—	—	—
CCP3– Input Capture/Output Compare 3	43	35	0x00005A	IFS2<3>	IEC2<3>	IPC8<14:12>
CCT3 – CCP3 Timer	44	36	0x00005C	IFS2<4>	IEC2<4>	IPC9<2:0>
Reserved	45-47	37-39	0x00005E-0x000062	—	—	—
CCP4 – Input Capture/Output Compare 4	48	40	0x000064	IFS2<8>	IEC2<8>	IPC10<2:0>
CCT4 – CCP4 Timer	49	41	0x000066	IFS2<9>	IEC2<9>	IPC10<6:4>
Reserved	50-55	42-47	0x000068-0x000072	—	—	—
QEI1 – Position Counter Compare	56	48	0x000074	IFS3<0>	IEC3<0>	IPC12<2:0>
U1E – UART1 Error Interrupt	57	49	0x000076	IFS3<1>	IEC3<1>	IPC12<6:4>
Reserved	58-71	50-63	0x000078-0x000092	—	—	—
I2C1BC – I2C1 Bus Collision	72	64	0x000094	IFS4<0>	IEC4<0>	IPC16<2:0>
Reserved	73-74	65-66	0x000096-0x000098	—	—	—
PWM1 – PWM Generator 1	75	67	0x00009A	IFS4<3>	IEC4<3>	IPC16<14:12>
PWM2 – PWM Generator 2	76	68	0x00009C	IFS4<4>	IEC4<4>	IPC17<2:0>
PWM3 – PWM Generator 3	77	69	0x00009E	IFS4<5>	IEC4<5>	IPC17<6:4>
PWM4 – PWM Generator 4	78	70	0x0000A0	IFS4<6>	IEC4<6>	IPC17<10:8>
PWM5 – PWM Generator 5	79	71	0x0000A2	IFS4<7>	IEC4<7>	IPC17<14:12>
PWM6 – PWM Generator 6	80	72	0x0000A4	IFS4<8>	IEC4<8>	IPC18<2:0>
PWM7 – PWM Generator 7	81	73	0x0000A6	IFS4<9>	IEC4<9>	IPC18<6:4>
PWM8 – PWM Generator 8	82	74	0x0000A8	IFS4<10>	IEC4<10>	IPC18<10:8>

© 2017-2018 Microchip Technology Inc.

TABLE 4-20: SLAVE INTERRUPT VECTOR DETAILS (CONTINUED)

Interrupt Source	Vector #	IRQ #	IVT Address	Interrupt Bit Location		
				Flag	Enable	Priority
CND – Change Notice Interrupt D	83	75	0x0000AA	IFS4<11>	IEC4<11>	IPC18<14:12>
CNE – Change Notice Interrupt E	84	76	0x0000AC	IFS4<12>	IEC4<12>	IPC19<2:0>
Reserved	85	77	—	—	—	—
CMP1 – Slave Comparator 1 Interrupt	86	78	0x0000B0	IFS4<14>	IEC4<14>	IPC19<10:8>
CMP2 – Slave Comparator 2 Interrupt	87	79	0x0000B2	IFS4<15>	IEC4<15>	IPC19<14:12>
CMP3 – Slave Comparator 3 Interrupt	88	80	0x0000B4	IFS5<0>	IEC5<0>	IPC20<2:0>
Reserved	89	81	0x0000B6	—	—	—
PTG0 – PTG Int. Trigger Master 0	90	82	0x0000B8	IFS5<2>	IEC5<2>	IPC20<10:8>
PTG1 – PTG Int. Trigger Master 1	91	83	0x0000BA	IFS5<3>	IEC5<3>	IPC20<14:12>
PTG2 – PTG Int. Trigger Master 2	92	84	0x0000BC	IFS5<4>	IEC5<4>	IPC21<2:0>
PTG3 – PTG Int. Trigger Master 3	93	85	0x0000BE	IFS5<5>	IEC5<6>	IPC21<6:4>
Reserved	94-97	86-89	0x0000C0	—	—	—
ADC – ADC Global Interrupt	98	90	0x0000C8	IFS5<10>	IEC5<10>	IPC22<10:8>
ADCAN0 – ADC AN0 Interrupt	99	91	0x0000CA	IFS5<11>	IEC5<11>	IPC22<14:12>
ADCAN1 – ADC AN1 Interrupt	100	92	0x0000CC	IFS5<12>	IEC5<12>	IPC23<2:0>
ADCAN2 – ADC AN2 Interrupt	101	93	0x0000CE	IFS5<13>	IEC5<13>	IPC23<6:4>
ADCAN3 – ADC AN3 Interrupt	102	94	0x0000D0	IFS5<14>	IEC5<14>	IPC23<10:8>
ADCAN4 – ADC AN4 Interrupt	103	95	0x0000D2	IFS5<15>	IEC5<15>	IPC23<14:12>
ADCAN5 – ADC AN5 Interrupt	104	96	0x0000D4	IFS6<0>	IEC6<0>	IPC24<2:0>
ADCAN6 – ADC AN6 Interrupt	105	97	0x0000D6	IFS6<1>	IEC6<1>	IPC24<6:4>
ADCAN7 – ADC AN7 Interrupt	106	98	0x0000D8	IFS6<2>	IEC6<2>	IPC24<10:8>
ADCAN8 – ADC AN8 Interrupt	107	99	0x0000DA	IFS6<3>	IEC6<3>	IPC24<14:12>
ADCAN9 – ADC AN9 Interrupt	108	100	0x0000DC	IFS6<4>	IEC6<4>	IPC25<2:0>
ADCAN10 – ADC AN10 Interrupt	109	101	0x0000DE	IFS6<5>	IEC6<5>	IPC25<6:4>
ADCAN11 – ADC AN11 Interrupt	110	102	0x0000E0	IFS6<6>	IEC6<6>	IPC25<10:8>
ADCAN12 – ADC AN12 Interrupt	111	103	0x0000E2	IFS6<7>	IEC6<7>	IPC25<14:12>
ADCAN13 – ADC AN13 Interrupt	112	104	0x0000E4	IFS6<8>	IEC6<8>	IPC26<2:0>
ADCAN14 – ADC AN14 Interrupt	113	105	0x0000E6	IFS6<9>	IEC6<9>	IPC26<6:4>
ADCAN15 – ADC AN15 Interrupt	114	106	0x0000E8	IFS6<10>	IEC6<10>	IPC26<10:8>
ADCAN16 – ADC AN16 Interrupt	115	107	0x0000EA	IFS6<11>	IEC6<11>	IPC26<14:12>
ADCAN17 – ADC AN17 Interrupt	116	108	0x0000EC	IFS6<12>	IEC6<12>	IPC27<2:0>
ADCAN18 – ADC AN18 Interrupt	117	109	0x0000EE	IFS6<13>	IEC6<13>	IPC27<6:4>
ADCAN19 – ADC AN19 Interrupt	118	110	0x0000F0	IFS6<14>	IEC6<14>	IPC27<10:8>
ADCAN20 – ADC AN20 Interrupt	119	111	0x0000F2	IFS6<15>	IEC6<15>	IPC27<14:12>
Reserved	120-122	112-114	0x0000F4-0x0000F8	—	—	—
ADFLT – ADC Fault	123	115	0x0000FA	IFS7<3>	IEC7<3>	IPC28<14:12>
ADCMP0 – ADC Digital Comparator 0	124	116	0x0000FC	IFS7<4>	IEC7<4>	IPC29<2:0>
ADCMP1 – ADC Digital Comparator 1	125	117	0x0000FE	IFS7<5>	IEC7<5>	IPC29<6:4>
ADCMP2 – ADC Digital Comparator 2	126	118	0x000100	IFS7<6>	IEC7<6>	IPC29<10:8>
ADCMP3 – ADC Digital Comparator 3	127	119	0x000102	IFS7<7>	IEC7<7>	IPC29<14:12>
ADFLTR0 – ADC Oversample Filter 0	128	120	0x000104	IFS7<8>	IEC7<8>	IPC30<2:0>
ADFLTR1 – ADC Oversample Filter 1	129	121	0x000106	IFS7<9>	IEC7<9>	IPC30<6:4>
ADFLTR2 – ADC Oversample Filter 2	130	122	0x000108	IFS7<10>	IEC7<10>	IPC30<10:8>
ADFLTR3 – ADC Oversample Filter 3	131	123	0x00010A	IFS7<11>	IEC7<11>	IPC30<14:12>
CLC1P – CLC1 Positive Edge	132	124	0x00010C	IFS7<12>	IEC7<12>	IPC31<2:0>
CLC2P – CLC2 Positive Edge	133	125	0x00010E	IFS7<13>	IEC7<13>	IPC31<6:4>

© 2017-2018 Microchip Technology Inc.

TABLE 4-20: SLAVE INTERRUPT VECTOR DETAILS (CONTINUED)

Interrupt Source	Vector #	IRQ #	IVT Address	Interrupt Bit Location		
				Flag	Enable	Priority
SPI1 – SPI1 Error	134	126	0x000110	IFS7<14>	IEC7<14>	IPC31<10:8>
Reserved	135-136	127-128	0x000112-0x000114	—	—	—
MSIM – MSI Master Initiated Interrupt	137	129	0x000116	IFS8<1>	IEC8<1>	IPC32<6:4>
MSIA – MSI Protocol A	138	130	0x000118	IFS8<2>	IEC8<2>	IPC32<10:8>
MSIB – MSI Protocol B	139	131	0x00011A	IFS8<3>	IEC8<3>	IPC32<14:12>
MSIC – MSI Protocol C	140	132	0x00011C	IFS8<4>	IEC8<4>	IPC33<2:0>
MSID – MSI Protocol D	141	133	0x00011E	IFS8<5>	IEC8<5>	IPC33<6:4>
MSIE – MSI Protocol E	142	134	0x000120	IFS8<6>	IEC8<6>	IPC33<10:8>
MSIF – MSI Protocol F	143	135	0x000122	IFS8<7>	IEC8<7>	IPC33<14:12>
MSIG – MSI Protocol G	144	136	0x000124	IFS8<8>	IEC8<8>	IPC34<2:0>
MSIH – MSI Protocol H	145	137	0x000126	IFS8<9>	IEC8<9>	IPC34<6:4>
MSIDT – MSI Slave Read FIFO Data Ready	146	138	0x000128	IFS8<10>	IEC8<10>	IPC34<10:8>
MSIWFE – MSI Slave Write FIFO Empty	147	139	0x00012A	IFS8<11>	IEC8<11>	IPC34<14:12>
MSIFLT – Read or Write FIFO Fault (Over/Underflow)	148	140	0x00012C	IFS8<12>	IEC8<12>	IPC35<2:0>
MSIMRST– MSI Master Reset	149	141	0x00012E-0x000134	IFS8<13>	IEC8<13>	IPC35<6:4>
Reserved	150-152	142-144	0x000130	—	—	—
MSTBRK – Master Break	153	145	0x000136	IFS9<1>	IEC9<1>	IPC36<6:4>
Reserved	154-163	146-163	0x000138-0x00014A	—	—	—
MCLKF – Master Clock Fail	164	156	0x00014C	IFS9<12>	IEC9<12>	IPC39<2:0>
Reserved	165-175	157-167	0x00014E-0x000162	—	—	—
ADFIFO – ADC FIFO Ready	176	168	0x000164	IFS10<8>	IEC10<8>	IPC42<2:0>
PEVTA – PWM Event A	177	169	0x000166	IFS10<9>	IEC10<9>	IPC42<6:4>
PEVTB – PWM Event B	178	170	0x000168	IFS10<10>	IEC10<10>	IPC42<10:8>
PEVTC – PWM Event C	179	171	0x00016A	IFS10<11>	IEC10<11>	IPC42<14:12>
PEVTD – PWM Event D	180	172	0x00016C	IFS10<12>	IEC10<12>	IPC43<2:0>
PEVTE – PWM Event E	181	173	0x00016E	IFS10<13>	IEC10<13>	IPC43<6:4>
PEVTF – PWM Event F	182	174	0x000170	IFS10<14>	IEC10<14>	IPC43<10:8>
CLC3P – CLC3 Positive Edge	183	175	0x000172	IFS10<15>	IEC10<15>	IPC43<14:12>
CLC4P – CLC4 Positive Edge	184	176	0x000174	IFS11<0>	IEC11<0>	IPC44<2:0>
CLC1N – CLC1 Negative Edge	185	177	0x000176	IFS11<1>	IEC11<1>	IPC44<6:4>
CLC2N – CLC2 Negative Edge	186	178	0x000178	IFS11<2>	IEC11<2>	IPC44<10:8>
CLC3N – CLC3 Negative Edge	187	179	0x00017A	IFS11<3>	IEC11<3>	IPC44<14:>
CLC4N – CLC4 Negative Edge	188	180	0x00017C	IFS11<4>	IEC11<4>	IPC45<2:0>
Reserved	189-196	181-188	0x0017E- 0x0018C	—	—	—
U1EVT – UART1 Event	197	189	0x00018E	IFS11<13>	IF2C11<13>	IPC47<6:4>

© 2017-2018 Microchip Technology Inc.

TABLE 4-21: SLAVE INTERRUPT FLAG REGISTERS

Register	Bit 15	Bit 14	Bit 13	Bit 12	Bit 11	Bit 10	Bit 9	Bit 8	Bit 7	Bit 6	Bit 5	Bit 4	Bit 3	Bit 2	Bit 1	Bit 0
IFS0	INT1IF	NVMIF	ECCSBEIF	U1TXIF	U1RXIF	SPI1TXIF	SPI1RXIF	DMA1IF	CCT1IF	CCP1IF	—	DMA0IF	CNBIF	CNAIF	T1IF	INT0IF
IFS1	—	—	—	—	—	INT3IF	—	CCT2IF	CCP2IF	—	—	INT2IF	CNCIF	—	MI2C1IF	SI2C1IF
IFS2	—	—	—	—	—	—	CCT4IF	CCP4IF	—	—	—	CCT3IF	CCP3IF	—	—	—
IFS3	—	—	ICDIF	—	—	—	—	—	—	—	—	—	—	—	U1EIF	QEI1IF
IFS4	CMP2IF	CMP1IF	—	CNEIF	CNDIF	PWM8IF	PWM7IF	PWM6IF	PWM5IF	PWM4IF	PWM3IF	PWM2IF	PWM1IF	—	—	I2C1BCIF
IFS5	ADCAN4IF	ADCAN3IF	ADCAN2IF	ADCAN1IF	ADCAN0IF	ADCIF	—	—	—	—	PTG3IF	PTG2IF	PTG1IF	PTG0IF	—	CMP3IF
IFS6	ADCAN20IF	ADCAN19IF	ADCAN18IF	ADCAN17IF	ADCAN16IF	ADCAN15IF	ADCAN14IF	ADCAN13IF	ADCAN12IF	ADCAN11IF	ADCAN10IF	ADCAN9IF	ADCAN8IF	ADCAN7IF	ADCAN6IF	ADCAN5IF
IFS7	—	SPI1IF	CLC2PIF	CLC1PIF	ADFLTR3IF	ADFLTR2IF	ADFLTR1IF	ADFLTR0IF	ADCMP3IF	ADCMP2IF	ADCMP1IF	ADCMP0IF	ADFLTIF	—	—	—
IFS8	—	—	MSIMRSTIF	MSIFLTIF	MSIWFEIF	MSIDTIF	MSIHIF	MSIGIF	MSIFIF	MSIEIF	MSIDIF	MSICIF	MSIBIF	MSIAIF	MSIMIF	—
IFS9	—	—	—	MCLKFIF	—	—	—	—	—	—	—	—	—	—	MSTBRKIF	—
IFS10	CLC3PIF	PEVTFIF	PEVTEIF	PEVTDIF	PEVTCIF	PEVTBIF	PEVTAIF	ADFIFOIF	—	—	—	—	—	—	—	—
IFS11	—	—	U1EVTIF	—	—	—	—	—	—	—	—	CLC4NIF	CLC3NIF	CLC2NPIF	CLC1NIF	CLC4PIF

TABLE 4-22: SLAVE INTERRUPT ENABLE REGISTERS

Register	Bit 15	Bit 14	Bit 13	Bit 12	Bit 11	Bit 10	Bit 9	Bit 8	Bit 7	Bit 6	Bit 5	Bit 4	Bit 3	Bit 2	Bit 1	Bit 0
IEC0	INT1IE	NVMIE	ECCSBEIE	U1TXIE	U1RXIE	SPI1TXIE	SPI1RXIE	DMA1IE	CCT1IE	CCP1IE	—	DMA0IE	CNBIE	CNAIE	T1IE	INT0IE
IEC1	—	—	—	—	—	INT3IE	—	CCT2IE	CCP2IE	—	—	INT2IE	CNCIE	—	MI2C1IE	SI2C1IE
IEC2	—	—	—	—	—	—	CCT4IE	CCP4IE	—	—	—	CCT3IE	CCP3IE	—	—	—
IEC3	—	—	ICDIE	—	—	—	—	—	—	—	—	—	—	—	U1EIE	QEI1IE
IEC4	CMP2IE	CMP1IE	—	CNEIE	CNDIE	PWM8IE	PWM7IE	PWM6IE	PWM5IE	PWM4IE	PWM3IE	PWM2IE	PWM1IE	—	—	I2C1BCIE
IEC5	ADCAN4IE	ADCAN3IE	ADCAN2IE	ADCAN1IE	ADCAN0IE	ADCIE	—	—	—	—	PTG3IE	PTG2IE	PTG1IE	PTG0IE	—	CMP3IE
IEC6	—	ADCAN19IE	ADCAN18IE	ADCAN17IE	ADCAN16IE	ADCAN15IE	ADCAN14IE	ADCAN13IE	ADCAN12IE	ADCAN11IE	ADCAN10IE	ADCAN9IE	ADCAN8IE	ADCAN7IE	ADCAN6IE	ADCAN5IE
IEC7	—	SPI1IE	CLC2PIE	CLC1PIE	ADFLTR3IE	ADFLTR2IE	ADFLTR1IE	ADFLTR0IE	ADCMP3IE	ADCMP2IE	ADCMP1IE	ADCMP0IE	ADFLTIE	—	—	—
IEC8	—	—	MSIMRSTIE	MSIFLTIE	MSIWFEIE	MSIDTIE	MSIHIE	MSIGIE	MSIFIE	MSIEIE	MSIDIE	MSICIE	MSIBIE	MSIAIE	MSIMIF	—
IEC9	—	—	—	MCLKFIE	—	—	—	—	—	—	—	—	—	—	MSTBRKIE	—
IEC10	CLC3PIE	PEVTFIE	PEVTEIE	PEVTDIE	PEVTCIE	PEVTBIE	PEVTAIE	ADFIFOIE	—	—	—	—	—	—	—	—
IEC11	—	—	U1EVTIE	—	—	—	—	—	—	—	—	CLC4NIE	CLC3NIE	CLC2NIE	CLC1NIE	CLC4PIE

© 2017-2018 Microchip Technology Inc.

TABLE 4-23: SLAVE INTERRUPT PRIORITY REGISTERS

Register	Bit 15	Bit 14	Bit 13	Bit 12	Bit 11	Bit 10	Bit 9	Bit 8	Bit 7	Bit 6	Bit 5	Bit 4	Bit 3	Bit 2	Bit 1	Bit 0
IPC0	—	CNBIP2	CNBIP1	CNBIP0	—	CNAIP2	CNAIP1	CNAIP0	—	T1IP2	T1IP1	T1IP0	—	INT0IP2	INT0IP1	INT0IP0
IPC1	—	CCT1IP2	CCT1IP1	CCT1IP0	—	CCP1IP2	CCP1IP1	CCP1IP0	—	—	—	—	—	DMA0IP2	DMA0IP1	DMA0IP0
IPC2	—	U1RXIP2	U1RXIP1	U1RXIP0	—	SPI1TXIP2	SPI1TXIP1	SPI1TXIP0	—	SPI1RXIP2	SPI1RXIP1	SPI1RXIP0	—	DMA1IP2	DMA1IP1	DMA1IP0
IPC3	—	INT1IP2	INT1IP1	INT1IP0	—	NVMIP2	NVMIP1	NVMIP0	—	ECCSBEIP2	ECCSBEIP1	ECCSBEIP0	—	U1TXIP2	U1TXIP1	U1TXIP0
IPC4	—	CNCIP2	CNCIP1	CNCIP0	—	—	—	—	—	MI2C1IP2	MI2C1IP1	MI2C1IP0	—	SI2C1IP2	SI2C1IP1	SI2C1IP0
IPC5	—	CCP2IP2	CCP2IP1	CCP2IP0	—	—	—	—	—	—	—	—	—	INT2IP2	INT2IP1	INT2IP0
IPC6	—	—	—	—	—	INT3IP2	INT3IP1	INT3IP0	—	—	—	—	—	CCT2IP2	CCT2IP1	CCT2IP0
IPC7	—	—	—	—	—	—	—	—	—	—	—	—	—	—	—	—
IPC8	—	CCP3IP2	CCP3IP1	CCP3IP0	—	—	—	—	—	—	—	—	—	—	—	—
IPC9	—	—	—	—	—	—	—	—	—	—	—	—	—	CCT3IP2	CCT3IP1	CCT3IP0
IPC10	—	—	—	—	—	—	—	—	—	CCT4IP2	CCT4IP1	CCT4IP0	—	CCP4IP2	CCP4IP1	CCP4IP0
IPC11	—	—	—	—	—	—	—	—	—	—	—	—	—	—	—	—
IPC12	—	—	—	—	—	—	—	—	—	U1EIP2	U1EIP1	U1EIP0	—	QEI1IP2	QEI1IP1	QEI1IP0
IPC13	—	—	—	—	—	—	—	—	—	—	—	—	—	—	—	—
IPC14	—	—	—	—	—	—	—	—	—	—	—	—	—	—	—	—
IPC15	—	—	—	—	—	JTAGIP2	JTAGIP1	JTAGIP0	—	ICDIP2	ICDIP1	ICDIP0	—	—	—	—
IPC16	—	PWM1IP2	PWM1IP1	PWM1IP0	—	—	—	—	—	—	—	—	—	I2C1BCIP2	I2C1BCIP1	I2C1BCIP0
IPC17	—	PWM5IP2	PWM5IP1	PWM5IP0	—	PWM4IP2	PWM4IP1	PWM4IP0	—	PWM3IP2	PWM3IP1	PWM3IP0	—	PWM2IP2	PWM2IP1	PWM2IP0
IPC18	—	CNDIP2	CNDIP1	CNDIP0	—	PWM8IP2	PWM8IP1	PWM8IP0	—	PWM7IP2	PWM7IP1	PWM7IP0	—	PWM6IP2	PWM6IP1	PWM6IP0
IPC19	—	CMP2IP2	CMP2IP1	CMP2IP0	—	CMP1IP2	CMP1IP1	CMP1IP0	—	—	—	—	—	CNEIP2	CNEIP1	CNEIP0
IPC20	—	PTG1IP2	PTG1IP1	PTG1IP0	—	PTG0IP2	PTG0IP1	PTG0IP0	—	—	—	—	—	CMP3IP2	CMP3IP1	CMP3IP0
IPC21	—	—	—	—	—	—	—	—	—	PTG3IP2	PTG3IP1	PTG3IP0	—	PTG12P2	PTG12P1	PTG12P0
IPC22	—	ADCAN0IP2	ADCAN0IP1	ADCAN0IP0	—	ADCIP2	ADCIP1	ADCIP	—	—	—	—	—	—	—	—
IPC23	—	ADCAN4IP2	ADCAN4IP1	ADCAN4IP0	—	ADCAN3IP2	ADCAN3IP1	ADCAN3IP0	—	ADCAN2IP2	ADCAN2IP1	ADCAN2IP0	—	ADCAN1IP2	ADCAN1IP1	ADCAN1IP0
IPC24	—	ADCAN8IP2	ADCAN8IP1	ADCAN8IP0	—	ADCAN7IP2	ADCAN7IP1	ADCAN7IP0	—	ADCAN6IP2	ADCAN6IP1	ADCAN6IP0	—	ADCAN5IP2	ADCAN5IP1	ADCAN5IP0
IPC25	—	ADCAN12IP2	ADCAN12IP1	ADCAN12IP0	—	ADCAN11IP2	ADCAN11IP1	ADCAN11IP0	—	ADCAN10IP2	ADCAN10IP1	ADCAN10IP0	—	ADCAN9IP2	ADCAN9IP1	ADCAN9IP0
IPC26	—	ADCAN16IP2	ADCAN16IP1	ADCAN16IP0	—	ADCAN15IP2	ADCAN15IP1	ADCAN15IP0	—	ADCAN14IP2	ADCAN14IP1	ADCAN14IP0	—	ADCAN13IP2	ADCAN13IP1	ADCAN13IP0
IPC27	—	ADCAN20IP2	ADCAN20IP1	ADCAN20IP0	—	ADCAN19IP2	ADCAN19IP1	ADCAN19IP0	—	ADCAN18IP2	ADCAN18IP1	ADCAN18IP0	—	ADCAN17IP2	ADCAN17IP1	ADCAN17IP0
IPC28	—	ADFLTIP2	ADFLTIP1	ADFLTIP0	—	—	—	—	—	—	—	—	—	ADCAN21IP2	ADCAN21IP1	ADCAN21IP0
IPC29	—	ADCMP3IP2	ADCMP3IP1	ADCMP3IP0	—	ADCMP2IP2	ADCMP2IP1	ADCMP2IP0	—	ADCMP1IP2	ADCMP1IP1	ADCMP1IP0	—	ADCMP0IP2	ADCMP0IP1	ADCMP0IP0
IPC30	—	ADFLTR3IP2	ADFLTR3IP1	ADFLTR3IP0	—	ADFLTR2IP2	ADFLTR2IP1	ADFLTR2IP0	—	ADFLTR1IP2	ADFLTR1IP1	ADFLTR1IP0	—	ADFLTR0IP2	ADFLTR0IP1	ADFLTR0IP0
IPC31	—	—	—	—	—	SPI1IP2	SPI1IP1	SPI1IP0	—	CLC2PEIP2	CLC2PEIP1	CLC2PEIP0	—	CLC1PEIP2	CLC1PEIP1	CLC1PEIP0
IPC32	—	MSIBIP2	MSIBIP1	MSIBIP0	—	MSIAIP2	MSIAIP1	MSIAIP0	—	MSMIP2	MSMIP1	MSMIP0	—	—	—	—
IPC33	—	MSIFIP2	MSIFIP1	MSIFIP0	—	MSIEIP2	MSIEIP1	MSIEIP0	—	MSIDIP2	MSIDIP1	MSIDIP0	—	MSICIP2	MSICIP1	MSICIP0
IPC34	—	MSIWFEIP2	MSIWFEIP1	MSIWFEIP0	—	MSIDTIP2	MSIDTIP1	MSIDTIP0	—	MSIHIP2	MSIHIP1	MSIHIP0	—	MSIGIP2	MSIGIP1	MSIGIP0
IPC35	—	—	—	—	—	—	—	—	—	MSIMRSTIP2	MSIMRSTIP1	MSIMRSTIP0	—	MSIFLTIP2	MSIFLTIP1	MSIFLTIP0

© 2017-2018 Microchip Technology Inc.

TABLE 4-23: SLAVE INTERRUPT PRIORITY REGISTERS (CONTINUED)

Register	Bit 15	Bit 14	Bit 13	Bit 12	Bit 11	Bit 10	Bit 9	Bit 8	Bit 7	Bit 6	Bit 5	Bit 4	Bit 3	Bit 2	Bit 1	Bit 0
IPC36	—	—	—	—	—	—	—	—	—	MSTBRKIP2	MSTBRKIP1	MSTBRKIP0	—	—	—	—
IPC37	—	—	—	—	—	—	—	—	—	—	—	—	—	—	—	—
IPC38	—	—	—	—	—	—	—	—	—	—	—	—	—	—	—	—
IPC39	—	—	—	—	—	—	—	—	—	—	—	—	—	MCLKFIP2	MCLKFIP1	MCLKFIP0
IPC40	—	—	—	—	—	—	—	—	—	ADC1IP2	ADC1IP1	ADC1IP0	—	ADC0IP2	ADC0IP1	ADC0IP0
IPC41	—	—	—	—	—	—	—	—	—	—	—	—	—	—	—	—
IPC42	—	PEVTCIP2	PEVTCIP1	PEVTCIP0	—	PEVTBIP2	PEVTBIP1	PEVTBIP0	—	PEVTAIP2	PEVTAIP1	PEVTAIP0	—	ADFIFOIP2	ADFIFOIP1	ADFIFOIP0
IPC43	—	CLC3PIP2	CLC3PIP1	CLC3PIP0	—	PEVTFIP2	PEVTFIP1	PEVTFIP0	—	PEVTEIP2	PEVTEIP1	PEVTEIP0	—	PEVTDIP2	PEVTDIP1	PEVTDIP0
IPC44	—	CLC3NIP2	CLC3NIP1	CLC3NIP0	—	CLC2NIP2	CLC2NIP1	CLC2NIP0	—	CLC1NIP2	CLC1NIP1	CLC1NIP0	—	CLC4PIP2	CLC4PIP1	CLC4PIP0
IPC45	—	—	—	—	—	—	—	—	—	—	—	—	—	CLC4NIP2	CLC4NIP1	CLC4NIP0
IPC46	—	—	—	—	—	—	—	—	—	—	—	—	—	—	—	—
IPC47	—	—	—	—	—	—	—	—	—	U1EVTIP2	U1EVTIP1	U1EVTIP0	—	—	—	—

© 2017-2018 Microchip Technology Inc.

4.5.3 INTERRUPT RESOURCES

Many useful resources are provided on the main product page of the Microchip web site for the devices listed in this data sheet. This product page contains the latest updates and additional information.

4.5.3.1 Key Resources

- **"Interrupts"** (DS70000600) in the *"dsPIC33/PIC24 Family Reference Manual"*
- Code Samples
- Application Notes
- Software Libraries
- Webinars
- All Related *"dsPIC33/PIC24 Family Reference Manual"* Sections
- Development Tools

4.5.4 INTERRUPT CONTROL AND STATUS REGISTERS

The dsPIC33CH128MP508S1 family devices implement the following registers for the interrupt controller:

- INTCON1
- INTCON2
- INTCON3
- INTCON4
- INTTREG

4.5.4.1 INTCON1 through INTCON4

Global interrupt control functions are controlled from INTCON1, INTCON2, INTCON3 and INTCON4.

INTCON1 contains the Interrupt Nesting Disable bit (NSTDIS), as well as the control and status flags for the processor trap sources.

The INTCON2 register controls external interrupt request signal behavior and contains the Global Interrupt Enable bit (GIE).

INTCON3 contains the status flags for the Auxiliary PLL and DO stack overflow status trap sources.

The INTCON4 register contains the Software Generated Hard Trap Status bit (SGHT).

4.5.4.2 IFSx

The IFSx registers maintain all of the interrupt request flags. Each source of interrupt has a status bit, which is set by the respective peripherals or external signal and is cleared via software.

4.5.4.3 IECx

The IECx registers maintain all of the interrupt enable bits. These control bits are used to individually enable interrupts from the peripherals or external signals.

4.5.4.4 IPCx

The IPCx registers are used to set the Interrupt Priority Level (IPL) for each source of interrupt. Each user interrupt source can be assigned to one of seven priority levels.

4.5.5 INTTREG

The INTTREG register contains the associated interrupt vector number and the new CPU Interrupt Priority Level, which are latched into the Vector Number (VECNUM<7:0>) and Interrupt Level bits (ILR<3:0>) fields in the INTTREG register. The new Interrupt Priority Level is the priority of the pending interrupt.

The interrupt sources are assigned to the IFSx, IECx and IPCx registers in the same sequence as they are listed in Table 4-20. For example, INT0 (External Interrupt 0) is shown as having Vector Number 8 and a natural order priority of 0. Thus, the INT0IF bit is found in IFS0<0>, the INT0IE bit in IEC0<0> and the INT0IP<2:0> bits in the first position of IPC0 (IPC0<2:0>).

4.5.6 STATUS/CONTROL REGISTERS

Although these registers are not specifically part of the interrupt control hardware, two of the CPU Control registers contain bits that control interrupt functionality. For more information on these registers, refer to **"dsPIC33E Enhanced CPU"** (DS70005158) in the *"dsPIC33/PIC24 Family Reference Manual"*.

- The CPU STATUS Register, SR, contains the IPL<2:0> bits (SR<7:5>). These bits indicate the current CPU Interrupt Priority Level. The user software can change the current CPU Interrupt Priority Level by writing to the IPLx bits.
- The CORCON register contains the IPL3 bit which, together with IPL<2:0>, also indicates the current CPU priority level. IPL3 is a read-only bit so that trap events cannot be masked by the user software.

All Interrupt registers are described in Register 4-18 through Register 4-22 on the following pages.

© 2017-2018 Microchip Technology Inc.

4.5.7 SLAVE INTERRUPT CONTROL/STATUS REGISTERS

REGISTER 4-16: SR: CPU STATUS REGISTER(1)

R/W-0	R/W-0	R/W-0	R/W-0	R/C-0	R/C-0	R-0	R/W-0
OA	OB	SA	SB	OAB	SAB	DA	DC
bit 15							bit 8

R/W-0(3)	R/W-0(3)	R/W-0(3)	R-0	R/W-0	R/W-0	R/W-0	R/W-0
IPL2(2)	IPL1(2)	IPL0(2)	RA	N	OV	Z	C
bit 7							bit 0

Legend:	C = Clearable bit		
R = Readable bit	W = Writable bit	U = Unimplemented bit, read as ‘0’	
-n = Value at POR	‘1’= Bit is set	‘0’ = Bit is cleared	x = Bit is unknown

bit 7-5 **IPL<2:0>:** CPU Interrupt Priority Level Status bits(2,3)

`111` = CPU Interrupt Priority Level is 7 (15); user interrupts are disabled
`110` = CPU Interrupt Priority Level is 6 (14)
`101` = CPU Interrupt Priority Level is 5 (13)
`100` = CPU Interrupt Priority Level is 4 (12)
`011` = CPU Interrupt Priority Level is 3 (11)
`010` = CPU Interrupt Priority Level is 2 (10)
`001` = CPU Interrupt Priority Level is 1 (9)
`000` = CPU Interrupt Priority Level is 0 (8)

Note 1: For complete register details, see Register 4-1.

2: The IPL<2:0> bits are concatenated with the IPL<3> bit (CORCON<3>) to form the CPU Interrupt Priority Level. The value in parentheses indicates the IPL, if IPL<3> = `1`. User interrupts are disabled when IPL<3> = `1`.

3: The IPL<2:0> Status bits are read-only when the NSTDIS bit (INTCON1<15>) = `1`.

REGISTER 4-17: CORCON: SLAVE CORE CONTROL REGISTER[1]

R/W-0	U-0	R/W-0	R/W-0	R/W-0	R-0	R-0	R-0
VAR	—	US1	US0	EDT	DL2	DL1	DL0
bit 15							bit 8

R/W-0	R/W-0	R/W-1	R/W-0	R/C-0	R-0	R/W-0	R/W-0
SATA	SATB	SATDW	ACCSAT	IPL3[2]	SFA	RND	IF
bit 7							bit 0

Legend:	C = Clearable bit		
R = Readable bit	W = Writable bit	U = Unimplemented bit, read as ‘0’	
-n = Value at POR	‘1’= Bit is set	‘0’ = Bit is cleared	x = Bit is unknown

bit 15 **VAR:** Variable Exception Processing Latency Control bit
`1` = Variable exception processing is enabled
`0` = Fixed exception processing is enabled

bit 3 **IPL3:** CPU Interrupt Priority Level Status bit 3[2]
`1` = CPU Interrupt Priority Level is greater than 7
`0` = CPU Interrupt Priority Level is 7 or less

Note 1: For complete register details, see Register 4-2.
2: The IPL3 bit is concatenated with the IPL<2:0> bits (SR<7:5>) to form the CPU Interrupt Priority Level.

© 2017-2018 Microchip Technology Inc.

REGISTER 4-18: INTCON1: SLAVE INTERRUPT CONTROL REGISTER 1

R/W-0	R/W-0	R/W-0	R/W-0	R/W-0	R/W-0	R/W-0	R/W-0
NSTDIS	OVAERR	OVBERR	COVAERR	COVBERR	OVATE	OVBTE	COVTE
bit 15							bit 8

R/W-0	R/W-0	U-0	R/W-0	R/W-0	R/W-0	R/W-0	U-0
SFTACERR	DIV0ERR	—	MATHERR	ADDRERR	STKERR	OSCFAIL	—
bit 7							bit 0

Legend:			
R = Readable bit	W = Writable bit	U = Unimplemented bit, read as ‘0’	
-n = Value at POR	‘1’ = Bit is set	‘0’ = Bit is cleared	x = Bit is unknown

bit 15 **NSTDIS:** Interrupt Nesting Disable bit
1 = Interrupt nesting is disabled
0 = Interrupt nesting is enabled

bit 14 **OVAERR:** Accumulator A Overflow Trap Flag bit
1 = Trap was caused by overflow of Accumulator A
0 = Trap was not caused by overflow of Accumulator A

bit 13 **OVBERR:** Accumulator B Overflow Trap Flag bit
1 = Trap was caused by overflow of Accumulator B
0 = Trap was not caused by overflow of Accumulator B

bit 12 **COVAERR:** Accumulator A Catastrophic Overflow Trap Flag bit
1 = Trap was caused by catastrophic overflow of Accumulator A
0 = Trap was not caused by catastrophic overflow of Accumulator A

bit 11 **COVBERR:** Accumulator B Catastrophic Overflow Trap Flag bit
1 = Trap was caused by catastrophic overflow of Accumulator B
0 = Trap was not caused by catastrophic overflow of Accumulator B

bit 10 **OVATE:** Accumulator A Overflow Trap Enable bit
1 = Trap overflow of Accumulator A
0 = Trap is disabled

bit 9 **OVBTE:** Accumulator B Overflow Trap Enable bit
1 = Trap overflow of Accumulator B
0 = Trap is disabled

bit 8 **COVTE:** Catastrophic Overflow Trap Enable bit
1 = Trap on catastrophic overflow of Accumulator A or B is enabled
0 = Trap is disabled

bit 7 **SFTACERR:** Shift Accumulator Error Status bit
1 = Math error trap was caused by an invalid accumulator shift
0 = Math error trap was not caused by an invalid accumulator shift

bit 6 **DIV0ERR:** Divide-by-Zero Error Status bit
1 = Math error trap was caused by a divide-by-zero
0 = Math error trap was not caused by a divide-by-zero

bit 5 **Unimplemented:** Read as ‘0’

bit 4 **MATHERR:** Math Error Status bit
1 = Math error trap has occurred
0 = Math error trap has not occurred

bit 3 **ADDRERR:** Address Error Trap Status bit
1 = Address error trap has occurred
0 = Address error trap has not occurred

REGISTER 4-18: INTCON1: SLAVE INTERRUPT CONTROL REGISTER 1 (CONTINUED)

bit 2	**STKERR:** Stack Error Trap Status bit 1 = Stack error trap has occurred 0 = Stack error trap has not occurred
bit 1	**OSCFAIL:** Oscillator Failure Trap Status bit 1 = Oscillator failure trap has occurred 0 = Oscillator failure trap has not occurred
bit 0	**Unimplemented:** Read as '0'

© 2017-2018 Microchip Technology Inc.

REGISTER 4-19: INTCON2: SLAVE INTERRUPT CONTROL REGISTER 2

R/W-1	R/W-0	R/W-0	U-0	U-0	U-0	U-0	U-0
GIE	DISI	SWTRAP	—	—	—	—	—
bit 15							bit 8

U-0	U-0	U-0	U-0	R/W-0	R/W-0	R/W-0	R/W-0
—	—	—	—	INT3EP	INT2EP	INT1EP	INT0EP
bit 7							bit 0

Legend:			
R = Readable bit	W = Writable bit	U = Unimplemented bit, read as ‘0’	
-n = Value at POR	‘1’ = Bit is set	‘0’ = Bit is cleared	x = Bit is unknown

bit 15 **GIE:** Global Interrupt Enable bit
`1` = Interrupts and associated IE bits are enabled
`0` = Interrupts are disabled, but traps are still enabled

bit 14 **DISI:** `DISI` Instruction Status bit
`1` = `DISI` instruction is active
`0` = `DISI` instruction is not active

bit 13 **SWTRAP:** Software Trap Status bit
`1` = Software trap is enabled
`0` = Software trap is disabled

bit 12-4 **Unimplemented:** Read as ‘`0`’

bit 3 **INT3EP:** External Interrupt 3 Edge Detect Polarity Select bit
`1` = Interrupt on negative edge
`0` = Interrupt on positive edge

bit 2 **INT2EP:** External Interrupt 2 Edge Detect Polarity Select bit
`1` = Interrupt on negative edge
`0` = Interrupt on positive edge

bit 1 **INT1EP:** External Interrupt 1 Edge Detect Polarity Select bit
`1` = Interrupt on negative edge
`0` = Interrupt on positive edge

bit 0 **INT0EP:** External Interrupt 0 Edge Detect Polarity Select bit
`1` = Interrupt on negative edge
`0` = Interrupt on positive edge

REGISTER 4-20: INTCON3: SLAVE INTERRUPT CONTROL REGISTER 3

U-0	U-0	U-0	U-0	U-0	U-0	U-0	R/W-0
—	—	—	—	—	—	—	NAE
bit 15							bit 8

U-0	U-0	U-0	R/W-0	U-0	U-0	U-0	R/W-0
—	—	—	DOOVR	—	—	—	APLL
bit 7							bit 0

Legend:			
R = Readable bit	W = Writable bit	U = Unimplemented bit, read as ‘0’	
-n = Value at POR	‘1’ = Bit is set	‘0’ = Bit is cleared	x = Bit is unknown

bit 15-9 **Unimplemented:** Read as ‘0’

bit 8 **NAE:** NVM Address Error Soft Trap Status bit
1 = NVM address error soft trap has occurred
0 = NVM address error soft trap has not occurred

bit 7-5 **Unimplemented:** Read as ‘0’

bit 4 **DOOVR:** DO Stack Overflow Soft Trap Status bit
1 = DO stack overflow soft trap has occurred
0 = DO stack overflow soft trap has not occurred

bit 3-1 **Unimplemented:** Read as ‘0’

bit 0 **APLL:** Auxiliary PLL Loss of Lock Soft Trap Status bit
1 = APLL lock soft trap has occurred
0 = APLL lock soft trap has not occurred

REGISTER 4-21: INTCON4: SLAVE INTERRUPT CONTROL REGISTER 4

U-0	U-0	U-0	U-0	U-0	U-0	U-0	U-0
—	—	—	—	—	—	—	—
bit 15							bit 8

U-0	U-0	U-0	U-0	U-0	U-0	U-0	R/W-0
—	—	—	—	—	—	—	SGHT
bit 7							bit 0

Legend:			
R = Readable bit	W = Writable bit	U = Unimplemented bit, read as ‘0’	
-n = Value at POR	‘1’ = Bit is set	‘0’ = Bit is cleared	x = Bit is unknown

bit 15-1 **Unimplemented:** Read as ‘0’

bit 0 **SGHT:** Software Generated Hard Trap Status bit
1 = Software generated hard trap has occurred
0 = Software generated hard trap has not occurred

© 2017-2018 Microchip Technology Inc.

REGISTER 4-22: INTTREG: SLAVE INTERRUPT CONTROL AND STATUS REGISTER

U-0	U-0	R-0	U-0	R-0	R-0	R-0	R-0
—	—	VHOLD	—	ILR3	ILR2	ILR1	ILR0
bit 15							bit 8

R-0	R-0	R-0	R-0	R-0	R-0	R-0	R-0
VECNUM7	VECNUM6	VECNUM5	VECNUM4	VECNUM3	VECNUM2	VECNUM1	VECNUM0
bit 7							bit 0

Legend:			
R = Readable bit	W = Writable bit	U = Unimplemented bit, read as ‘0’	
-n = Value at POR	‘1’ = Bit is set	‘0’ = Bit is cleared	x = Bit is unknown

bit 15-14 **Unimplemented:** Read as ‘0’

bit 13 **VHOLD:** Vector Number Capture Enable bit
1 = VECNUM<7:0> bits read current value of vector number encoding tree (i.e., highest priority pending interrupt)
0 = Vector number latched into VECNUM<7:0> at Interrupt Acknowledge and retained until next IACK

bit 12 **Unimplemented:** Read as ‘0’

bit 11-8 **ILR<3:0>:** New CPU Interrupt Priority Level bits
1111 = CPU Interrupt Priority Level is 15
...
0001 = CPU Interrupt Priority Level is 1
0000 = CPU Interrupt Priority Level is 0

bit 7-0 **VECNUM<7:0>:** Vector Number of Pending Interrupt bits
11111111 = 255, Reserved; do not use
...
00001001 = 9, IC1 – Input Capture 1
00001000 = 8, INT0 – External Interrupt 0
00000111 = 7, Reserved; do not use
00000110 = 6, Generic soft error trap
00000101 = 5, Reserved; do not use
00000100 = 4, Math error trap
00000011 = 3, Stack error trap
00000010 = 2, Generic hard trap
00000001 = 1, Address error trap
00000000 = 0, Oscillator fail trap

4.6 Slave I/O Ports

Note 1: This data sheet summarizes the features of the dsPIC33CH128MP508 family of devices. It is not intended to be a comprehensive reference source. To complement the information in this data sheet, refer to **"I/O Ports with Edge Detect"** (DS70005322) in the *"dsPIC33/PIC24 Family Reference Manual"*, which is available from the Microchip web site (www.microchip.com).

2: The I/O ports are shared by the Master core and Slave core. All input goes to both the Master and Slave. The I/O ownership is defined by the Configuration bits.

3: The TMS pin function may be active multiple times during ICSP™ device erase, programming and debugging. When the TMS function is active, the integrated pull-up resistor will pull the pin to VDD. Proper care should be taken if there are sensitive circuits connected on the TMS pin during programming/erase and debugging.

Many of the device pins are shared among the peripherals and the Parallel I/O ports. All I/O input ports feature Schmitt Trigger inputs for improved noise immunity. The Master and the Slave have the same number of I/O ports and are shared. The Master PORT registers are located in the Master SFR and the Slave PORT registers are located in the Slave SFR, respectively.

All of the input goes to both Master and Slave. For example, a high in RA0 can be read as high on both Master and Slave as long as the TRISA0 bit is maintained as an input of both Master and Slave. The ownership of the output functionality is assigned by the Configuration registers, FCFGPRA0 to FCFGPRE0. Setting the bits in the FCFGPRA0 to FCFGPRE0 registers assigns ownership to the Master or Slave pin.

4.6.1 PARALLEL I/O (PIO) PORTS

Generally, a Parallel I/O port that shares a pin with a peripheral is subservient to the peripheral. The peripheral's output buffer data and control signals are provided to a pair of multiplexers. The multiplexers select whether the peripheral or the associated port has ownership of the output data and control signals of the I/O pin. The logic also prevents "loop through", in which a port's digital output can drive the input of a peripheral that shares the same pin. Figure 4-17 illustrates how ports are shared with other peripherals and the associated I/O pin to which they are connected.

When a peripheral is enabled and the peripheral is actively driving an associated pin, the use of the pin as a general purpose output pin is disabled. The I/O pin can be read, but the output driver for the parallel port bit is disabled. If a peripheral is enabled, but the peripheral is not actively driving a pin, that pin can be driven by a port.

All port pins have twelve registers directly associated with their operation as digital I/Os. The Data Direction register (TRISx) determines whether the pin is an input or an output. If the data direction bit is a '1', then the pin is an input.

All port pins are defined as inputs after a Reset. Reads from the latch (LATx), read the latch. Writes to the latch, write the latch. Reads from the port (PORTx), read the port pins, while writes to the port pins, write the latch. Any bit and its associated data and control registers that are not valid for a particular device are disabled. This means the corresponding LATx and TRISx registers, and the port pin are read as zeros.

When a pin is shared with another peripheral or function that is defined as an input only, it is nevertheless regarded as a dedicated port because there is no other competing source of outputs. Table 4-24 shows the pin availability. Table 4-25 shows the 5V input tolerant pins across this device.

© 2017-2018 Microchip Technology Inc.

TABLE 4-24: PIN AND ANSELx AVAILABILITY

Device	Rx15	Rx14	Rx13	Rx12	Rx11	Rx10	Rx9	Rx8	Rx7	Rx6	Rx5	Rx4	Rx3	Rx2	Rx1	Rx0
PORTA																
dsPIC33XXXMP508/208	—	—	—	—	—	—	—	—	—	—	—	X	X	X	X	X
dsPIC33XXXMP506/206	—	—	—	—	—	—	—	—	—	—	—	X	X	X	X	X
dsPIC33XXXMP505/205	—	—	—	—	—	—	—	—	—	—	—	X	X	X	X	X
dsPIC33XXXMP503/203	—	—	—	—	—	—	—	—	—	—	—	X	X	X	X	X
dsPIC33XXXMP502/202	—	—	—	—	—	—	—	—	—	—	—	X	X	X	X	X
ANSELA	—	—	—	—	—	—	—	—	—	—	—	X	X	X	X	—
PORTB																
dsPIC33XXXMP508/208	X	X	X	X	X	X	X	X	X	X	X	X	X	X	X	X
dsPIC33XXXMP506/206	X	X	X	X	X	X	X	X	X	X	X	X	X	X	X	X
dsPIC33XXXMP505/205	X	X	X	X	X	X	X	X	X	X	X	X	X	X	X	X
dsPIC33XXXMP503/203	X	X	X	X	X	X	X	X	X	X	X	X	X	X	X	X
dsPIC33XXXMP502/202	X	X	X	X	X	X	X	X	X	X	X	X	X	X	X	X
ANSELB	—	—	—	—	—	—	—	X	X	—	—	X	X	X	X	X
PORTC																
dsPIC33XXXMP508/208	X	X	X	X	X	X	X	X	X	X	X	X	X	X	X	X
dsPIC33XXXMP506/206	X	X	X	X	X	X	X	X	X	X	X	X	X	X	X	X
dsPIC33XXXMP505/205	—	—	X	X	X	X	X	X	X	X	X	X	X	X	X	X
dsPIC33XXXMP503/203	—	—	—	—	—	—	—	—	—	—	X	X	X	X	X	X
dsPIC33XXXMP502/202	—	—	—	—	—	—	—	—	—	—	—	—	—	—	—	—
ANSELC	—	—	—	—	—	—	—	—	X	X	—	—	X	X	X	X
PORTD																
dsPIC33XXXMP508/208	X	X	X	X	X	X	X	X	X	X	X	X	X	X	X	X
dsPIC33XXXMP506/206	X	X	X	X	X	X	X	X	X	X	X	X	X	X	X	X
dsPIC33XXXMP505/205	—	—	X	—	—	X	—	X	—	—	—	—	—	—	X	—
dsPIC33XXXMP503/203	—	—	—	—	—	—	—	—	—	—	—	—	—	—	—	—
dsPIC33XXXMP502/202	—	—	—	—	—	—	—	—	—	—	—	—	—	—	—	—
ANSELD	—	X	X	X	X	X	—	—	—	—	—	—	—	—	—	—
PORTE																
dsPIC33XXXMP508/208	X	X	X	X	X	X	X	X	X	X	X	X	X	X	X	X
dsPIC33XXXMP506/206	—	—	—	—	—	—	—	—	—	—	—	—	—	—	—	—
dsPIC33XXXMP505/205	—	—	—	—	—	—	—	—	—	—	—	—	—	—	—	—
dsPIC33XXXMP503/203	—	—	—	—	—	—	—	—	—	—	—	—	—	—	—	—
dsPIC33XXXMP502/202	—	—	—	—	—	—	—	—	—	—	—	—	—	—	—	—
ANSELE	—	—	—	—	—	—	—	—	—	X	—	—	—	—	—	—

TABLE 4-25: 5V INPUT TOLERANT PORTS

PORTA	—	—	—	—	—	—	—	—	—	—	—	RA4	RA3	RA2	RA1	RA0
PORTB	RB15	RB14	RB13	RB12	RB11	RB10	RB9	RB8	RB7	RB6	RB5	RB4	RB3	RB2	RB1	RB0
PORTC	RC15	RC14	RC13	RC12	RC11	RC10	RC9	RC8	RC7	RC6	RC5	RC4	RC3	RC2	RC1	RC0
PORTD	RD15	RD14	RD13	RD12	RD11	RD10	RD9	RD8	RD7	RD6	RD5	RD4	RD3	RD2	RD1	RD0
PORTE	RE15	RE14	RE13	RE12	RE11	RE10	RE9	RE8	RE7	RE6	RE5	RE4	RE3	RE2	RE1	RE0

Legend: **Shaded pins** are up to 5.5 VDC input tolerant.

FIGURE 4-17: BLOCK DIAGRAM OF A TYPICAL SHARED PORT STRUCTURE

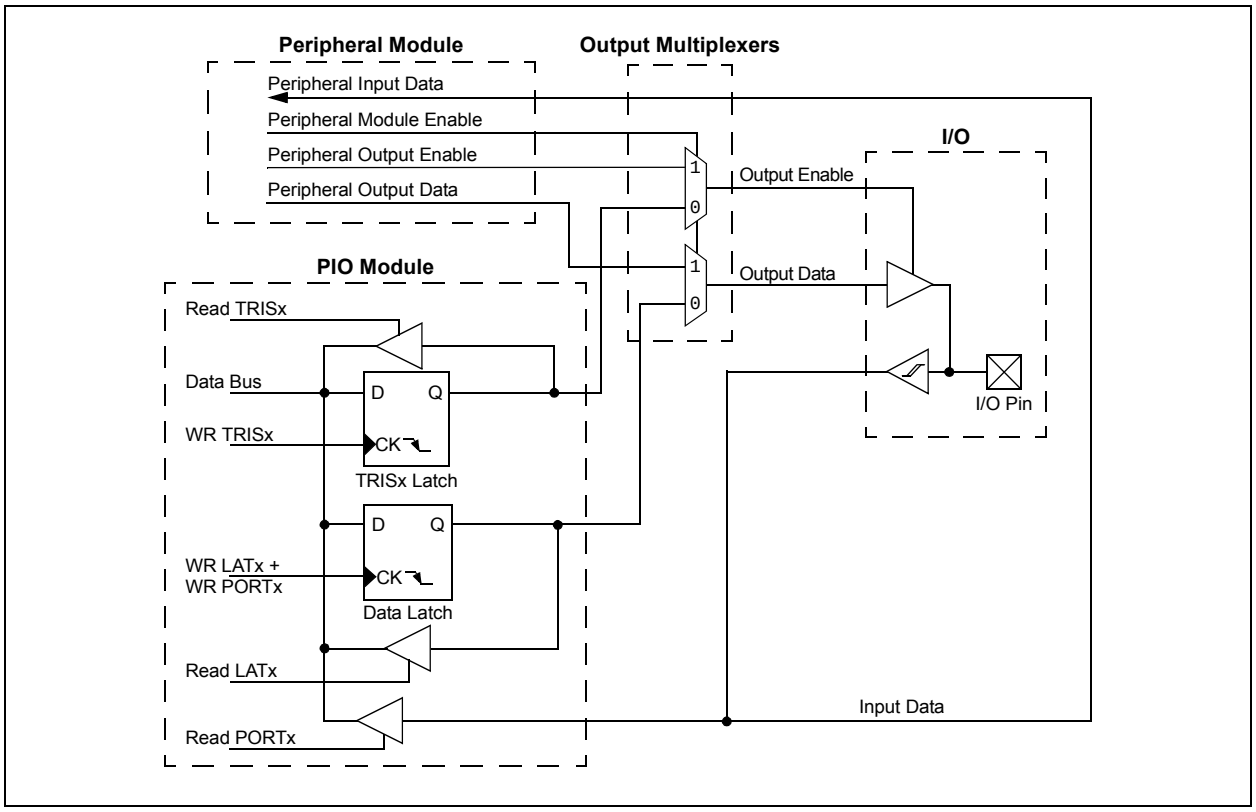

© 2017-2018 Microchip Technology Inc.

4.6.1.1 Open-Drain Configuration

In addition to the PORTx, LATx and TRISx registers for data control, port pins can also be individually configured for either digital or open-drain output. This is controlled by the Open-Drain Control x register, ODCx, associated with each port. Setting any of the bits configures the corresponding pin to act as an open-drain output.

The open-drain feature allows the generation of outputs, other than VDD, by using external pull-up resistors. The maximum open-drain voltage allowed on any pin is the same as the maximum VIH specification for that particular pin.

See the **"Pin Diagrams"** section for the available 5V tolerant pins and Table 24-18 for the maximum VIH specification for each pin.

4.6.2 CONFIGURING ANALOG AND DIGITAL PORT PINS

The ANSELx register controls the operation of the analog port pins. The port pins that are to function as analog inputs or outputs must have their corresponding ANSELx and TRISx bits set. In order to use port pins for I/O functionality with digital modules, such as timers, UARTs, etc., the corresponding ANSELx bit must be cleared.

The ANSELx register has a default value of 0xFFFF; therefore, all pins that share analog functions are analog (not digital) by default.

Pins with analog functions affected by the ANSELx registers are listed with a buffer type of analog in the Pinout I/O Descriptions (see Table 1-1).

If the TRISx bit is cleared (output) while the ANSELx bit is set, the digital output level (VOH or VOL) is converted by an analog peripheral, such as the ADC module or comparator module.

When the PORTx register is read, all pins configured as analog input channels are read as cleared (a low level).

Pins configured as digital inputs do not convert an analog input. Analog levels on any pin, defined as a digital input (including the ANx pins), can cause the input buffer to consume current that exceeds the device specifications.

4.6.2.1 I/O Port Write/Read Timing

One instruction cycle is required between a port direction change or port write operation and a read operation of the same port. Typically, this instruction would be a `NOP`, as shown in Example 4-3.

The following registers are in the PORT module:

- Register 4-23: ANSELx (one per port)
- Register 4-24: TRISx (one per port)
- Register 4-25: PORTx (one per port)
- Register 4-26: LATx (one per port)
- Register 4-27: ODCx (one per port)
- Register 4-28: CNPUx (one per port)
- Register 4-29: CNPDx (one per port)
- Register 4-30: CNCONx (one per port – optional)
- Register 4-31: CNEN0x (one per port)
- Register 4-32: CNSTATx (one per port – optional)
- Register 4-33: CNEN1x (one per port)
- Register 4-34: CNFx (one per port)

4.6.3 SLAVE PORT CONTROL/STATUS REGISTERS

REGISTER 4-23: ANSELx: ANALOG SELECT FOR PORTx REGISTER

R/W-1	R/W-1	R/W-1	R/W-1	R/W-1	R/W-1	R/W-1	R/W-1
ANSELx<15:8>							
bit 15							bit 8

R/W-1	R/W-1	R/W-1	R/W-1	R/W-1	R/W-1	R/W-1	R/W-1
ANSELx<7:0>							
bit 7							bit 0

Legend:			
R = Readable bit	W = Writable bit	U = Unimplemented bit, read as ‘0’	
-n = Value at POR	‘1’ = Bit is set	‘0’ = Bit is cleared	x = Bit is unknown

bit 15-0 **ANSELx<15:0>:** Analog Select for PORTx bits

`1` = Analog input is enabled and digital input is disabled on PORTx[n] pin
`0` = Analog input is disabled and digital input is enabled on PORTx[n] pin

© 2017-2018 Microchip Technology Inc.

REGISTER 4-24: TRISx: OUTPUT ENABLE FOR PORTx REGISTER

R/W-1	R/W-1	R/W-1	R/W-1	R/W-1	R/W-1	R/W-1	R/W-1
TRISx<15:8>							
bit 15							bit 8

R/W-1	R/W-1	R/W-1	R/W-1	R/W-1	R/W-1	R/W-1	R/W-1
TRISx<7:0>							
bit 7							bit 0

Legend:			
R = Readable bit	W = Writable bit	U = Unimplemented bit, read as ‘0’	
-n = Value at POR	‘1’ = Bit is set	‘0’ = Bit is cleared	x = Bit is unknown

bit 15-0 **TRISx<15:0>:** Output Enable for PORTx bits
`1` = LATx[n] is not driven on PORTx[n] pin
`0` = LATx[n] is driven on PORTx[n] pin

REGISTER 4-25: PORTx: INPUT DATA FOR PORTx REGISTER

R/W-1	R/W-1	R/W-1	R/W-1	R/W-1	R/W-1	R/W-1	R/W-1
PORTx<15:8>							
bit 15							bit 8

R/W-1	R/W-1	R/W-1	R/W-1	R/W-1	R/W-1	R/W-1	R/W-1
PORTx<7:0>							
bit 7							bit 0

Legend:			
R = Readable bit	W = Writable bit	U = Unimplemented bit, read as ‘0’	
-n = Value at POR	‘1’ = Bit is set	‘0’ = Bit is cleared	x = Bit is unknown

bit 15-0 **PORTx<15:0>:** PORTx Data Input Value bits

REGISTER 4-26: LATx: OUTPUT DATA FOR PORTx REGISTER

R/W-x	R/W-x	R/W-x	R/W-x	R/W-x	R/W-x	R/W-x	R/W-x
LATx<15:8>							
bit 15							bit 8

R/W-x	R/W-x	R/W-x	R/W-x	R/W-x	R/W-x	R/W-x	R/W-x
LATx<7:0>							
bit 7							bit 0

Legend:			
R = Readable bit	W = Writable bit	U = Unimplemented bit, read as ‘0’	
-n = Value at POR	‘1’ = Bit is set	‘0’ = Bit is cleared	x = Bit is unknown

bit 15-0 **LATx<15:0>:** PORTx Data Output Value bits

REGISTER 4-27: ODCx: OPEN-DRAIN ENABLE FOR PORTx REGISTER

R/W-0	R/W-0	R/W-0	R/W-0	R/W-0	R/W-0	R/W-0	R/W-0
ODCx<15:8>							
bit 15							bit 8

R/W-0	R/W-0	R/W-0	R/W-0	R/W-0	R/W-0	R/W-0	R/W-0
ODCx<7:0>							
bit 7							bit 0

Legend:			
R = Readable bit	W = Writable bit	U = Unimplemented bit, read as ‘0’	
-n = Value at POR	‘1’ = Bit is set	‘0’ = Bit is cleared	x = Bit is unknown

bit 15-0 **ODCx<15:0>:** PORTx Open-Drain Enable bits
1 = Open-drain is enabled on PORTx pin
0 = Open-drain is disabled on PORTx pin

© 2017-2018 Microchip Technology Inc.

REGISTER 4-28: CNPUx: CHANGE NOTIFICATION PULL-UP ENABLE FOR PORTx REGISTER

R/W-0	R/W-0	R/W-0	R/W-0	R/W-0	R/W-0	R/W-0	R/W-0
CNPUx<15:8>							
bit 15							bit 8

R/W-0	R/W-0	R/W-0	R/W-0	R/W-0	R/W-0	R/W-0	R/W-0
CNPUx<7:0>							
bit 7							bit 0

Legend:			
R = Readable bit	W = Writable bit	U = Unimplemented bit, read as ‘0’	
-n = Value at POR	‘1’ = Bit is set	‘0’ = Bit is cleared	x = Bit is unknown

bit 15-0 **CNPUx<15:0>:** Change Notification Pull-up Enable for PORTx bits
`1` = The pull-up for PORTx[n] is enabled – takes precedence over pull-down selection
`0` = The pull-up for PORTx[n] is disabled

REGISTER 4-29: CNPDx: CHANGE NOTIFICATION PULL-DOWN ENABLE FOR PORTx REGISTER

R/W-0	R/W-0	R/W-0	R/W-0	R/W-0	R/W-0	R/W-0	R/W-0
CNPDx<15:8>							
bit 15							bit 8

R/W-0	R/W-0	R/W-0	R/W-0	R/W-0	R/W-0	R/W-0	R/W-0
CNPDx<7:0>							
bit 7							bit 0

Legend:			
R = Readable bit	W = Writable bit	U = Unimplemented bit, read as ‘0’	
-n = Value at POR	‘1’ = Bit is set	‘0’ = Bit is cleared	x = Bit is unknown

bit 15-0 **CNPDx<15:0>:** Change Notification Pull-Down Enable for PORTx bits
`1` = The pull-down for PORTx[n] is enabled (if the pull-up for PORTx[n] is not enabled)
`0` = The pull-down for PORTx[n] is disabled

REGISTER 4-30: CNCONx: CHANGE NOTIFICATION CONTROL FOR PORTx REGISTER

R/W-0	U-0	U-0	U-0	R/W-0	U-0	U-0	U-0
ON	—	—	—	CNSTYLE	—	—	—
bit 15							bit 8

U-0	U-0	U-0	U-0	U-0	U-0	U-0	U-0
—	—	—	—	—	—	—	—
bit 7							bit 0

Legend:			
R = Readable bit	W = Writable bit	U = Unimplemented bit, read as ‘0’	
-n = Value at POR	‘1’ = Bit is set	‘0’ = Bit is cleared	x = Bit is unknown

bit 15 **ON:** Change Notification (CN) Control for PORTx On bit
`1` = CN is enabled
`0` = CN is disabled

bit 14-12 **Unimplemented:** Read as ‘`0`’

bit 11 **CNSTYLE:** Change Notification Style Selection bit
`1` = Edge style (detects edge transitions, CNFx<15:0> bits are used for a Change Notification event)
`0` = Mismatch style (detects change from last port read, CNSTATx<15:0> bits are used for a Change Notification event)

bit 10-0 **Unimplemented:** Read as ‘`0`’

REGISTER 4-31: CNEN0x: INTERRUPT CHANGE NOTIFICATION ENABLE FOR PORTx REGISTER

R/W-0	R/W-0	R/W-0	R/W-0	R/W-0	R/W-0	R/W-0	R/W-0
CNEN0x<15:8>							
bit 15							bit 8

R/W-0	R/W-0	R/W-0	R/W-0	R/W-0	R/W-0	R/W-0	R/W-0
CNEN0x<7:0>							
bit 7							bit 0

Legend:			
R = Readable bit	W = Writable bit	U = Unimplemented bit, read as ‘0’	
-n = Value at POR	‘1’ = Bit is set	‘0’ = Bit is cleared	x = Bit is unknown

bit 15-0 **CNEN0x<15:0>:** Interrupt Change Notification Enable for PORTx bits
`1` = Interrupt-on-change (from the last read value) is enabled for PORTx[n]
`0` = Interrupt-on-change is disabled for PORTx[n]

© 2017-2018 Microchip Technology Inc.

REGISTER 4-32: CNSTATx: INTERRUPT CHANGE NOTIFICATION STATUS FOR PORTx REGISTER

R-0	R-0	R-0	R-0	R-0	R-0	R-0	R-0
CNSTATx<15:8>							
bit 15							bit 8

R-0	R-0	R-0	R-0	R-0	R-0	R-0	R-0
CNSTATx<7:0>							
bit 7							bit 0

Legend:			
R = Readable bit	W = Writable bit	U = Unimplemented bit, read as ‘0’	
-n = Value at POR	‘1’ = Bit is set	‘0’ = Bit is cleared	x = Bit is unknown

bit 15-0 **CNSTAT<15:0>:** Interrupt Change Notification Status for PORTx bits
When CNSTYLE (CNCONx<11>) = 0:
1 = Change occurred on PORTx[n] since last read of PORTx[n]
0 = Change did not occur on PORTx[n] since last read of PORTx[n]

REGISTER 4-33: CNEN1x: INTERRUPT CHANGE NOTIFICATION EDGE SELECT FOR PORTx REGISTER

R/W-0	R/W-0	R/W-0	R/W-0	R/W-0	R/W-0	R/W-0	R/W-0
CNEN1x<15:8>							
bit 15							bit 8

R/W-0	R/W-0	R/W-0	R/W-0	R/W-0	R/W-0	R/W-0	R/W-0
CNEN1x<7:0>							
bit 7							bit 0

Legend:			
R = Readable bit	W = Writable bit	U = Unimplemented bit, read as ‘0’	
-n = Value at POR	‘1’ = Bit is set	‘0’ = Bit is cleared	x = Bit is unknown

bit 15-0 **CNEN1x<15:0>:** Interrupt Change Notification Edge Select for PORTx bits

REGISTER 4-34: CNFx: INTERRUPT CHANGE NOTIFICATION FLAG FOR PORTx REGISTER

R/W-0	R/W-0	R/W-0	R/W-0	R/W-0	R/W-0	R/W-0	R/W-0
CNFx<15:8>							
bit 15							bit 8

R/W-0	R/W-0	R/W-0	R/W-0	R/W-0	R/W-0	R/W-0	R/W-0
CNFx<7:0>							
bit 7							bit 0

Legend:			
R = Readable bit	W = Writable bit	U = Unimplemented bit, read as ‘0’	
-n = Value at POR	‘1’ = Bit is set	‘0’ = Bit is cleared	x = Bit is unknown

bit 15-0 **CNFx<15:0>:** Interrupt Change Notification Flag for PORTx bits
When CNSTYLE (CNCONx<11>) = 1:
1 = An enabled edge event occurred on PORTx[n] pin
0 = An enabled edge event did not occur on PORTx[n] pin

© 2017-2018 Microchip Technology Inc.

4.6.4 INPUT CHANGE NOTIFICATION (ICN)

The Input Change Notification function of the I/O ports allows the dsPIC33CH128MP508S1 family devices to generate interrupt requests to the processor in response to a Change-of-State (COS) on selected input pins. This feature can detect input Change-of-States, even in Sleep mode, when the clocks are disabled. Every I/O port pin can be selected (enabled) for generating an interrupt request on a Change-of-State. Five control registers are associated with the Change Notification (CN) functionality of each I/O port. To enable the Change Notification feature for the port, the ON bit (CNCONx<15>) must be set.

The CNEN0x and CNEN1x registers contain the CN interrupt enable control bits for each of the input pins. The setting of these bits enables a CN interrupt for the corresponding pins. Also, these bits, in combination with the CNSTYLE bit (CNCONx<11>), define a type of transition when the interrupt is generated. Possible CN event options are listed in Table 4-26.

The CNSTATx register indicates whether a change occurred on the corresponding pin since the last read of the PORTx bit. In addition to the CNSTATx register, the CNFx register is implemented for each port. This register contains flags for Change Notification events. These flags are set if the valid transition edge, selected in the CNEN0x and CNEN1x registers, is detected. CNFx stores the occurrence of the event. CNFx bits must be cleared in software to get the next Change Notification interrupt. The CN interrupt is generated only for the I/Os configured as inputs (corresponding TRISx bits must be set).

TABLE 4-26: CHANGE NOTIFICATION EVENT OPTIONS

CNSTYLE Bit (CNCONx<11>)	CNEN1x Bit	CNEN0x Bit	Change Notification Event Description
0	Does not matter	0	Disabled
0	Does not matter	1	Detects a mismatch between the last read state and the current state of the pin
1	0	0	Disabled
1	0	1	Detects a positive transition only (from ‘0’ to ‘1’)
1	1	0	Detects a negative transition only (from ‘1’ to ‘0’)
1	1	1	Detects both positive and negative transitions

Note: Pull-ups and pull-downs on Input Change Notification pins should always be disabled when the port pin is configured as a digital output.

EXAMPLE 4-3: PORT WRITE/READ EXAMPLE

```
MOV   0xFF00, W0    ; Configure PORTB<15:8>
                    ; as inputs
MOV   W0, TRISB     ; and PORTB<7:0>
                    ; as outputs
NOP                 ; Delay 1 cycle
BTSS  PORTB, #13    ; Next Instruction
```

4.6.5 PERIPHERAL PIN SELECT (PPS)

A major challenge in general purpose devices is providing the largest possible set of peripheral features, while minimizing the conflict of features on I/O pins. The challenge is even greater on low pin count devices. In an application where more than one peripheral needs to be assigned to a single pin, inconvenient work arounds in application code, or a complete redesign, may be the only option.

Peripheral Pin Select configuration provides an alternative to these choices by enabling peripheral set selection and placement on a wide range of I/O pins. By increasing the pinout options available on a particular device, users can better tailor the device to their entire application, rather than trimming the application to fit the device.

The Peripheral Pin Select configuration feature operates over a fixed subset of digital I/O pins. Users may independently map the input and/or output of most digital peripherals to any one of these I/O pins. Hardware safeguards are included that prevent accidental or spurious changes to the peripheral mapping once it has been established.

4.6.5.1 Available Pins

The number of available pins is dependent on the particular device and its pin count. Pins that support the Peripheral Pin Select feature include the label, “S1RPn”, in their full pin designation, where “n” is the remappable pin number. “S1RP” is used to designate pins that support both remappable input and output functions.

4.6.5.2 Available Peripherals

The peripherals managed by the Peripheral Pin Select are all digital only peripherals. These include general serial communications (UART and SPI), general purpose timer clock inputs, timer-related peripherals (input capture and output compare) and interrupt-on-change inputs.

In comparison, some digital only peripheral modules are never included in the Peripheral Pin Select feature. This is because the peripheral’s function requires special I/O circuitry on a specific port and cannot be easily connected to multiple pins. One example includes I^2C modules. A similar requirement excludes all modules with analog inputs, such as the ADC Converter.

A key difference between remappable and non-remappable peripherals is that remappable peripherals are not associated with a default I/O pin. The peripheral must always be assigned to a specific I/O pin before it can be used. In contrast, non-remappable peripherals are always available on a default pin, assuming that the peripheral is active and not conflicting with another peripheral.

When a remappable peripheral is active on a given I/O pin, it takes priority over all other digital I/Os and digital communication peripherals associated with the pin. Priority is given regardless of the type of peripheral that is mapped. Remappable peripherals never take priority over any analog functions associated with the pin.

4.6.5.3 Controlling Peripheral Pin Select

Peripheral Pin Select features are controlled through two sets of SFRs: one to map peripheral inputs and one to map outputs. Because they are separately controlled, a particular peripheral’s input and output (if the peripheral has both) can be placed on any selectable function pin without constraint.

The association of a peripheral to a peripheral-selectable pin is handled in two different ways, depending on whether an input or output is being mapped.

© 2017-2018 Microchip Technology Inc.

4.6.5.4 Input Mapping

The inputs of the Peripheral Pin Select options are mapped on the basis of the peripheral. That is, a control register associated with a peripheral dictates the pin it will be mapped to. The RPINRx registers are used to configure peripheral input mapping (see Register 4-36 through Register 4-59). Each register contains sets of 8-bit fields, with each set associated with one of the remappable peripherals. Programming a given peripheral's bit field with an appropriate 8-bit index value maps the S1RPn pin with the corresponding value, or internal signal, to that peripheral. See Table 4-27 for a list of available inputs.

For example, Figure 4-18 illustrates remappable pin selection for the U1RX input.

FIGURE 4-18: REMAPPABLE INPUT FOR U1RX

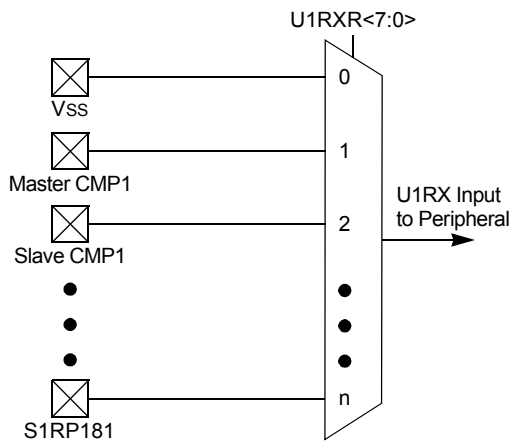

Note: For input only, Peripheral Pin Select functionality does not have priority over TRISx settings. Therefore, when configuring an S1RPn pin for input, the corresponding bit in the TRISx register must also be configured for input (set to '1').

TABLE 4-27: SLAVE REMAPPABLE PIN INPUTS

RPINRx<15:8> or RPINRx<7:0>	Function	Available on Ports
0	VSS	Internal
1	Master Comparator 1	Internal
2	Slave Comparator 1	Internal
3	Slave Comparator 2	Internal
4	Slave Comparator 3	Internal
5	Master REFCLKO	Internal
6	Master PTG Trigger 30	Internal
7	Master PTG Trigger 31	Internal
8	Slave PWM Event Output C	Internal
9	Slave PWM Event Output D	Internal
10	Slave PWM Event Output E	Internal
11	Master PWM Event Output C	Internal
12	Master PWM Event Output D	Internal
13	Master PWM Event Output E	Internal
14-31	S1RP14-S1RP31	Reserved
32	S1RP32	Port Pin RB0
33	S1RP33	Port Pin RB1
34	S1RP34	Port Pin RB2
35	S1RP35	Port Pin RB3
36	S1RP36	Port Pin RB4
37	S1RP37	Port Pin RB5
38	S1RP38	Port Pin RB6
39	S1RP39	Port Pin RB7
40	S1RP40	Port Pin RB8
41	S1RP41	Port Pin RB9
42	S1RP42	Port Pin RB10
43	S1RP43	Port Pin RB11
44	S1RP44	Port Pin RB12
45	S1RP45	Port Pin RB13
46	S1RP46	Port Pin RB14
47	S1RP47	Port Pin RB15
48	S1RP48	Port Pin RC0
49	S1RP49	Port Pin RC1
50	S1RP50	Port Pin RC2
51	S1RP51	Port Pin RC3
52	S1RP52	Port Pin RC4
53	S1RP53	Port Pin RC5
54	S1RP54	Port Pin RC6
55	S1RP55	Port Pin RC7
56	S1RP56	Port Pin RC8
57	S1RP57	Port Pin RC9
58	S1RP58	Port Pin RC10
59	S1RP59	Port Pin RC11

© 2017-2018 Microchip Technology Inc.

TABLE 4-27: SLAVE REMAPPABLE PIN INPUTS (CONTINUED)

RPINRx<15:8> or RPINRx<7:0>	Function	Available on Ports
60	S1RP60	Port Pin RC12
61	S1RP61	Port Pin RC13
62	S1RP62	Port Pin RC14
63	S1RP63	Port Pin RC15
64	S1RP64	Port Pin RD0
65	S1RP65	Port Pin RD1
66	S1RP66	Port Pin RD2
67	S1RP67	Port Pin RD3
68	S1RP68	Port Pin RD4
69	S1RP69	Port Pin RD5
70	S1RP70	Port Pin RD6
71	S1RP71	Port Pin RD7
72-161	S1RP72-S1RP161	Reserved
162	Slave On Request PWM3	Internal PWM Signal
163	Slave Off Request PWM3	Internal PWM Signal
164	Slave On Request PWM2	Internal PWM Signal
165	Slave Off Request PWM2	Internal PWM Signal
166	Slave On Request PWM1	Internal PWM Signal
167	Slave Off Request PWM1	Internal PWM Signal
168-169	S1RP168-S1RP169	Reserved
170	S1RP170	Slave Virtual S1RPV0
171	S1RP171	Slave Virtual S1RPV1
172	S1RP172	Slave Virtual S1RPV2
173	S1RP173	Slave Virtual S1RPV3
174	S1RP174	Slave Virtual S1RPV4
175	S1RP175	Slave Virtual S1RPV5
176	S1RP176	Master Virtual RPV0
177	S1RP177	Master Virtual RPV1
178	S1RP178	Master Virtual RPV2
179	S1RP179	Master Virtual RPV3
180	S1RP180	Master Virtual RPV4
181	S1RP181	Master Virtual RPV5

© 2017-2018 Microchip Technology Inc.

4.6.5.5 Virtual Connections

The dsPIC33CH128MP508S1 family devices support six virtual S1RPn pins (S1RP170-S1RP175), which are identical in functionality to all other S1RPn pins, with the exception of pinouts. These six pins are internal to the devices and are not connected to a physical device pin.

These pins provide a simple way for inter-peripheral connection without utilizing a physical pin. For example, the output of the analog comparator can be connected to S1RP170 and the PWM control input can be configured for S1RP170 as well. This configuration allows the analog comparator to trigger PWM Faults without the use of an actual physical pin on the device.

4.6.5.6 Slave PPS Inputs to Master Core PPS

The dsPIC33CH128MP508S1 Slave core subsystem PPS has connections to the Master core subsystem virtual PPS (S1RPV5-S1RPV0) output blocks. These inputs are mapped as S1RP175, S1RP174, S1RP173, S1RP172, S1RP171 and S1RP170.

The S1RPn inputs, S1RP1-S1RP13, are connected to internal signals from both the Master and Slave core subsystems. Additionally, the Master core virtual PPS output blocks (RPV5-RPV0) are connected to the Slave core PPS circuitry.

There are virtual pins in PPS to share between Master and Slave:

- RP181 is for Master input (RPV5)
- RP180 is for Master input (RPV4)
- RP179 is for Master input (RPV3)
- RP178 is for Master input (RPV2)
- RP177 is for Master input (RPV1)
- RP176 is for Master input (RPV0)
- S1RP175 is for Slave input (S1RPV5)
- S1RP174 is for Slave input (S1RPV4)
- S1RP173 is for Slave input (S1RPV3)
- S1RP172 is for Slave input (S1RPV2)
- S1RP171 is for Slave input (S1RPV1)
- S1RP170 is for Slave input (S1RPV0)

The idea of the S1RPVn (Remappable Pin Virtual) is to interconnect between Master and Slave without an I/O pin. For example, the Master UART receiver can be connected to the Slave UART transmit using S1RPVn and data communication can happen from Slave to Master without using any physical pin.

© 2017-2018 Microchip Technology Inc.

TABLE 4-28: SELECTABLE INPUT SOURCES (MAPS INPUT TO FUNCTION)

Input Name[1]	Function Name	Register	Configuration Bits
External Interrupt 1	S1INT1	RPINR0	INT1R<7:0>
External Interrupt 2	S1INT2	RPINR1	INT2R<7:0>
External Interrupt 3	S1INT3	RPINR1	INT3R<7:0>
Timer1 External Clock	S1T1CK	RPINR2	T1CKR<7:0>
SCCP Timer1	S1TCKI1	RPINR3	TCKI1R<7:0>
SCCP Capture 1	S1ICM1	RPINR3	ICM1R<7:0>
SCCP Timer2	S1TCKI2	RPINR4	TCKI2R<7:0>
SCCP Capture 2	S1ICM2	RPINR4	ICM2R<7:0>
SCCP Timer3	S1TCKI3	RPINR5	TCKI3R<7:0>
SCCP Capture 3	S1ICM3	RPINR5	ICM3R<7:0>
SCCP Timer4	S1TCKI4	RPINR6	TCKI4R<7:0>
SCCP Capture 4	S1ICM4	RPINR6	ICM4R<7:0>
Output Compare Fault A	S1OCFA	RPINR11	OCFAR<7:0>
Output Compare Fault B	S1OCFB	RPINR11	OCFBR<7:0>
PWM Input 8	S1PCI8	RPINR12	PCI8R<7:0>
PWM Input 9	S1PCI9	RPINR12	PCI9R<7:0>
PWM Input 10	S1PCI10	RPINR13	PCI10R<7:0>
PWM Input 11	S1PCI11	RPINR13	PCI11R<7:0>
QEI Input A	S1QEIA1	RPINR14	QEIA1R<7:0>
QEI Input B	S1QEIB1	RPINR14	QEIB1R<7:0>
QEI Index 1 Input	S1QEINDX1	RPINR15	QEINDX1R<7:0>
QEI Home 1 Input	S1QEIHOM1	RPINR15	QEIHOM1R<7:0>
UART1 Receive	S1U1RX	RPINR18	U1RXR<7:0>
UART1 Data-Set-Ready	$\overline{\text{S1U1DSR}}$	RPINR18	U1DSRR<7:0>
SPI1 Data Input	S1SDI1	RPINR20	SDI1R<7:0>
SPI1 Clock Input	S1SCK1	RPINR20	SCK1R<7:0>
SPI1 Slave Select	$\overline{\text{S1SS1}}$	RPINR21	SS1R<7:0>
Reference Clock Input	S1REFOI	RPINR21	REFOIR<7:0>
UART1 Clear-to-Send	$\overline{\text{S1U1CTS}}$	RPINR23	U1CTSR<7:0>
PWM Input 17	S1PCI17	RPINR37	PCI17R<7:0>
PWM Input 18	S1PCI18	RPINR38	PCI18R<7:0>
PWM Input 12	S1PCI12	RPINR42	PCI12R<7:0>
PWM Input 13	S1PCI13	RPINR42	PCI13R<7:0>
PWM Input 14	S1PCI14	RPINR43	PCI14R<7:0>
PWM Input 15	S1PCI15	RPINR43	PCI15R<7:0>
PWM Input 16	S1PCI16	RPINR44	PCI16R<7:0>
CLC Input A	S1CLCINA	RPINR45	CLCINAR<7:0>
CLC Input B	S1CLCINB	RPINR46	CLCINBR<7:0>
CLC Input C	S1CLCINC	RPINR46	CLCINCR<7:0>
CLC Input D	S1CLCIND	RPINR47	CLCINDR<7:0>
ADC External Trigger Input (ADTRIG31)	S1ADCTRG	RPINR47	ADCTRGR<7:0>

Note 1: Unless otherwise noted, all inputs use the Schmitt Trigger input buffers.

TABLE 4-29: SLAVE PPS INPUT CONTROL REGISTERS

Register	Bit 15	Bit 14	Bit 13	Bit 12	Bit 11	Bit 10	Bit 9	Bit 8	Bit 7	Bit 6	Bit 5	Bit 4	Bit 3	Bit 2	Bit 1	Bit 0
RPCONL	—	—	—	—	IOLOCK	—	—	—	—	—	—	—	—	—	—	—
RPINR0	INT1R7	INT1R6	INT1R5	INT1R4	INT1R3	INT1R2	INT1R1	INT1R0	—	—	—	—	—	—	—	—
RPINR1	INT3R7	INT3R6	INT3R5	INT3R4	INT3R3	INT3R2	INT3R1	INT3R0	INT2R7	INT2R6	INT2R5	INT2R4	INT2R3	INT2R2	INT2R1	INT2R0
RPINR2	T1CKR7	T1CKR6	T1CKR5	T1CKR4	T1CKR3	T1CKR2	T1CKR1	T1CKR0	—	—	—	—	—	—	—	—
RPINR3	ICM1R7	ICM1R6	ICM1R5	ICM1R4	ICM1R3	ICM1R2	ICM1R1	ICM1R0	TCKI1R7	TCKI1R6	TCKI1R5	TCKI1R4	TCKI1R3	TCKI1R2	TCKI1R1	TCKI1R0
RPINR4	ICM2R7	ICM2R6	ICM2R5	ICM2R4	ICM2R3	ICM2R2	ICM2R1	ICM2R0	TCKI2R7	TCKI2R6	TCKI2R5	TCKI2R4	TCKI2R3	TCKI2R2	TCKI2R1	TCKI2R0
RPINR5	ICM3R7	ICM3R6	ICM3R5	ICM3R4	ICM3R3	ICM3R2	ICM3R1	ICM3R0	TCKI3R7	TCKI3R6	TCKI3R5	TCKI3R4	TCKI3R3	TCKI3R2	TCKI3R1	TCKI3R0
RPINR6	ICM4R7	ICM4R6	ICM4R5	ICM4R4	ICM4R3	ICM4R2	ICM4R1	ICM4R0	TCKI4R7	TCKI4R6	TCKI4R5	TCKI4R4	TCKI4R3	TCKI4R2	TCKI4R1	TCKI4R0
RPINR11	OCFBR7	OCFBR6	OCFBR5	OCFBR4	OCFBR3	OCFBR2	OCFBR1	OCFBR0	OCFAR7	OCFAR6	OCFAR5	OCFAR4	OCFAR3	OCFAR2	OCFAR1	OCFAR0
RPINR12	PCI9R7	PCI9R6	PCI9R5	PCI9R4	PCI9R3	PCI9R2	PCI9R1	PCI9R0	PCI8R7	PCI8R6	PCI8R5	PCI8R4	PCI8R3	PCI8R2	PCI8R1	PCI8R0
RPINR13	PCI11R7	PCI11R6	PCI11R5	PCI11R4	PCI11R3	PCI11R2	PCI11R1	PCI11R0	PCI10R7	PCI10R6	PCI10R5	PCI10R4	PCI10R3	PCI10R2	PCI10R1	PCI10R0
RPINR14	QEIB1R7	QEIB1R6	QEIB1R5	QEIB1R4	QEIB1R3	QEIB1R2	QEIB1R1	QEIB1R0	QEIA1R7	QEIA1R6	QEIA1R5	QEIA1R4	QEIA1R3	QEIA1R2	QEIA1R1	QEIA1R0
RPINR15	QEIHOM1R7	QEIHOM1R6	QEIHOM1R5	QEIHOM1R4	QEIHOM1R3	QEIHOM1R2	QEIHOM1R1	QEIHOM1R0	QEINDX1R7	QEINDX1R6	QEINDX1R5	QEINDX1R4	QEINDX1R3	QEINDX1R2	QEINDX1R1	QEINDX1R0
RPINR18	U1DSRR7	U1DSRR6	U1DSRR5	U1DSRR4	U1DSRR3	U1DSRR2	U1DSRR1	U1DSRR0	U1RXR7	U1RXR6	U1RXR5	U1RXR4	U1RXR3	U1RXR2	U1RXR1	U1RXR0
RPINR20	SCK1R7	SCK1R6	SCK1R5	SCK1R4	SCK1R3	SCK1R2	SCK1R1	SCK1R0	SDI1R7	SDI1R6	SDI1R5	SDI1R4	SDI1R3	SDI1R2	SDI1R1	SDI1R0
RPINR21	REFOIR7	REFOIR6	REFOIR5	REFOIR4	REFOIR3	REFOIR2	REFOIR1	REFOIR0	SS1R7	SS1R6	SS1R5	SS1R4	SS1R3	SS1R2	SS1R1	SS1R0
RPINR23	U1CTSR7	U1CTSR6	U1CTSR5	U1CTSR4	U1CTSR3	U1CTSR2	U1CTSR1	U1CTSR0	—	—	—	—	—	—	—	—
RPINR37	PCI17R7	PCI17R6	PCI17R5	PCI17R4	PCI17R3	PCI17R2	PCI17R1	PCI17R0	—	—	—	—	—	—	—	—
RPINR38	—	—	—	—	—	—	—	—	PCI18R7	PCI18R6	PCI18R5	PCI18R4	PCI18R3	PCI18R2	PCI18R1	PCI18R0
RPINR42	PCI13R7	PCI13R6	PCI13R5	PCI13R4	PCI13R3	PCI13R2	PCI13R1	PCI13R0	PCI12R7	PCI12R6	PWM12R5	PWM12R4	PWM12R3	PWM12R2	PWM12R1	PWM12R0
RPINR43	PCI15R7	PCI15R6	PCI15R5	PCI15R4	PCI15R3	PCI15R2	PCI15R1	PCI15R0	PCI14R7	PCI14R6	PCI14R5	PCI14R4	PCI14R3	PCI14R2	PCI14R1	PCI14R0
RPINR44	—	—	—	—	—	—	—	—	PCI16R7	PCI16R6	PCI16R5	PCI16R4	PCI16R3	PCI16R2	PCI16R1	PCI16R0
RPINR45	CLCINAR7	CLCINAR6	CLCINAR5	CLCINAR4	CLCINAR3	CLCINAR2	CLCINAR1	CLCINAR0	—	—	—	—	—	—	—	—
RPINR46	CLCINCR7	CLCINCR6	CLCINCR5	CLCINCR4	CLCINCR3	CLCINCR2	CLCINCR1	CLCINCR0	CLCINBR7	CLCINBR6	CLCINBR5	CLCINBR4	CLCINBR3	CLCINBR2	CLCINBR1	CLCINBR0
RPINR47	ADCTRGR7	ADCTRGR6	ADCTRGR5	ADCTRGR4	ADCTRGR3	ADCTRGR2	ADCTRGR1	ADCTRGR0	CLCINDR7	CLCINDR6	CLCINDR5	CLCINDR4	CLCINDR3	CLCINDR2	CLCINDR1	CLCINDR0

© 2017-2018 Microchip Technology Inc.

4.6.5.7 Output Mapping

In contrast to inputs, the outputs of the Peripheral Pin Select options are mapped on the basis of the pin. In this case, a control register associated with a particular pin dictates the peripheral output to be mapped. The RPORx registers are used to control output mapping. Each register contains sets of 6-bit fields, with each set associated with one S1RPn pin (see Register 4-60 through Register 4-82). The value of the bit field corresponds to one of the peripherals and that peripheral's output is mapped to the pin (see Table 4-31 and Figure 4-19).

A null output is associated with the PPS Output register Reset value of '0'. This is done to ensure that remappable outputs remain disconnected from all output pins by default.

FIGURE 4-19: MULTIPLEXING REMAPPABLE OUTPUTS FOR S1RPn

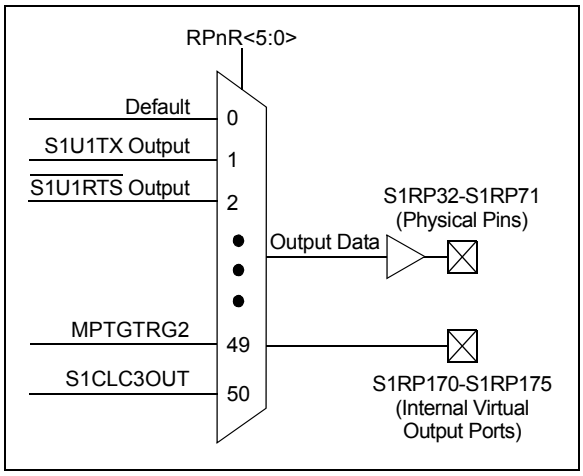

Note 1: There are six virtual output ports which are not connected to any I/O ports (S1RP170-S1RP175). These virtual ports can be accessed by RPOR20, RPOR21 and RPOR22.

4.6.5.8 Mapping Limitations

The control schema of the peripheral select pins is not limited to a small range of fixed peripheral configurations. There are no mutual or hardware-enforced lockouts between any of the peripheral mapping SFRs. Literally any combination of peripheral mappings, across any or all of the S1RPn pins, is possible. This includes both many-to-one and one-to-many mappings of peripheral inputs, and outputs to pins. While such mappings may be technically possible from a configuration point of view, they may not be supportable from an electrical point of view.

TABLE 4-30: SLAVE REMAPPABLE OUTPUT PIN REGISTERS

Register	S1RP Pin	I/O Port
RPOR0<5:0>	S1RP32	Port Pin S1RB0
RPOR0<13:8>	S1RP33	Port Pin S1RB1
RPOR1<5:0>	S1RP34	Port Pin S1RB2
RPOR1<13:8>	S1RP35	Port Pin S1RB3
RPOR2<5:0>	S1RP36	Port Pin S1RB4
RPOR2<13:8>	S1RP37	Port Pin S1RB5
RPOR3<5:0>	S1RP38	Port Pin S1RB6
RPOR3<13:8>	S1RP39	Port Pin S1RB7
RPOR4<5:0>	S1RP40	Port Pin S1RB8
RPOR4<13:8>	S1RP41	Port Pin S1RB9
RPOR5<5:0>	S1RP42	Port Pin S1RB10
RPOR5<13:8>	S1RP43	Port Pin S1RB11
RPOR6<5:0>	S1RP44	Port Pin S1RB12
RPOR6<13:8>	S1RP45	Port Pin S1RB13
RPOR7<5:0>	S1RP46	Port Pin S1RB14
RPOR7<13:8>	S1RP47	Port Pin S1RB15
RPOR8<5:0>	S1RP48	Port Pin S1RC0
RPOR8<13:8>	S1RP49	Port Pin S1RC1
RPOR9<5:0>	S1RP50	Port Pin S1RC2
RPOR9<13:8>	S1RP51	Port Pin S1RC3
RPOR10<5:0>	S1RP52	Port Pin S1RC4
RPOR10<13:8>	S1RP53	Port Pin S1RC5
RPOR11<5:0>	S1RP54	Port Pin S1RC6
RPOR11<13:8>	S1RP55	Port Pin S1RC7
RPOR12<5:0>	S1RP56	Port Pin S1RC8
RPOR12<13:8>	S1RP57	Port Pin S1RC9
RPOR13<5:0>	S1RP58	Port Pin S1RC10
RPOR13<13:8>	S1RP59	Port Pin S1RC11
RPOR14<5:0>	S1RP60	Port Pin S1RC12
RPOR14<13:8>	S1RP61	Port Pin S1RC13
RPOR15<5:0>	S1RP62	Port Pin S1RC14
RPOR15<13:8>	S1RP63	Port Pin S1RC15
RPOR16<5:0>	S1RP64	Port Pin S1RD0
RPOR16<13:8>	S1RP65	Port Pin S1RD1
RPOR17<5:0>	S1RP66	Port Pin S1RD2
RPOR17<13:8>	S1RP67	Port Pin S1RD3
RPOR18<5:0>	S1RP68	Port Pin S1RD4
RPOR18<13:8>	S1RP69	Port Pin S1RD5
RPOR19<5:0>	S1RP70	Port Pin S1RD6
RPOR19<13:8>	S1RP71	Port Pin S1RD7
	S1RP181-S1RP176	Reserved
RPOR20<5:0>	S1RP170	Virtual Pin S1RPV0
RPOR20<13:8>	S1RP171	Virtual Pin S1RPV1
RPOR21<5:0>	S1RP172	Virtual Pin S1RPV2
RPOR21<13:8>	S1RP173	Virtual Pin S1RPV3
RPOR22<5:0>	S1RP174	Virtual Pin S1RPV4
RPOR22<13:8>	S1RP175	Virtual Pin S1RPV5

© 2017-2018 Microchip Technology Inc.

TABLE 4-31: OUTPUT SELECTION FOR REMAPPABLE PINS (S1RPn)

Function	RPnR<5:0>	Output Name
Default PORT	000000	S1RPn tied to Default Pin
S1U1TX	000001	S1RPn tied to UART1 Transmit
$\overline{\text{S1U1RTS}}$	000010	S1RPn tied to UART1 Request-to-Send
S1SDO1	000101	S1RPn tied to SPI1 Data Output
S1SCK1OUT	000110	S1RPn tied to SPI1 Clock Output
$\overline{\text{S1SS1OUT}}$	000111	S1RPn tied to SPI1 Slave Select
S1REFCLKO	001110	S1RPn tied to Reference Clock Output
S1OCM1	001111	S1RPn tied to SCCP1 Output
S1OCM2	010000	S1RPn tied to SCCP2 Output
S1OCM3	010001	S1RPn tied to SCCP3 Output
S1OCM4	010010	S1RPn tied to SCCP4 Output
S1CMP1	010111	S1RPn tied to Comparator 1 Output
S1CMP2	011000	S1RPn tied to Comparator 2 Output
S1CMP3	011001	S1RPn tied to Comparator 3 Output
S1PWMH4	100010	S1RPn tied to PWM4H Output
S1PWML4	100011	S1RPn tied to PWM4L Output
S1PWMEA	100100	S1RPn tied to PWM Event A Output
S1PWMEB	100101	S1RPn tied to PWM Event B Output
S1QEICMP1	100110	S1RPn tied to QEI Comparator Output
S1CLC1OUT	101000	S1RPn tied to CLC1 Output
S1CLC2OUT	101001	S1RPn tied to CLC2 Output
S1PWMEC	101100	S1RPn tied to PWM Event C Output
S1PWMED	101101	S1RPn tied to PWM Event D Output
MPTGTRG1	101110	Master PTG24 Output
MPTGTRG2	101111	Master PTG25 Output
S1CLC3OUT	110010	S1RPn tied to CLC3 Output

TABLE 4-32: SLAVE PPS OUTPUT CONTROL REGISTERS

Register	Bit 15	Bit 14	Bit 13	Bit 12	Bit 11	Bit 10	Bit 9	Bit 8	Bit 7	Bit 6	Bit 5	Bit 4	Bit 3	Bit 2	Bit 1	Bit 0
RPOR0	—	—	RP33R5	RP33R4	RP33R3	RP33R2	RP33R1	RP33R0	—	—	RP32R5	RP32R4	RP32R3	RP32R2	RP32R1	RP32R0
RPOR1	—	—	RP35R5	RP35R4	RP35R3	RP35R2	RP35R1	RP35R0	—	—	RP34R5	RP34R4	RP34R3	RP34R2	RP34R1	RP34R0
RPOR2	—	—	RP37R5	RP37R4	RP37R3	RP37R2	RP37R1	RP37R0	—	—	RP36R5	RP36R4	RP36R3	RP36R2	RP36R1	RP36R0
RPOR3	—	—	RP39R5	RP39R4	RP39R3	RP39R2	RP39R1	RP39R0	—	—	RP38R5	RP38R4	RP38R3	RP38R2	RP38R1	RP38R0
RPOR4	—	—	RP41R5	RP41R4	RP41R3	RP41R2	RP41R1	RP41R0	—	—	RP40R5	RP40R4	RP40R3	RP40R2	RP40R1	RP40R0
RPOR5	—	—	RP43R5	RP43R4	RP43R3	RP43R2	RP43R1	RP43R0	—	—	RP42R5	RP42R4	RP42R3	RP42R2	RP42R1	RP42R0
RPOR6	—	—	RP45R5	RP45R4	RP45R3	RP45R2	RP45R1	RP45R0	—	—	RP44R5	RP44R4	RP44R3	RP44R2	RP44R1	RP44R0
RPOR7	—	—	RP47R5	RP47R4	RP47R3	RP47R2	RP47R1	RP47R0	—	—	RP46R5	RP46R4	RP46R3	RP46R2	RP46R1	RP46R0
RPOR8	—	—	RP49R5	RP49R4	RP49R3	RP49R2	RP49R1	RP49R0	—	—	RP48R5	RP48R4	RP48R3	RP48R2	RP48R1	RP48R0
RPOR9	—	—	RP51R5	RP51R4	RP51R3	RP51R2	RP51R1	RP51R0	—	—	RP50R5	RP50R4	RP50R3	RP50R2	RP50R1	RP50R0
RPOR10	—	—	RP53R5	RP53R4	RP53R3	RP53R2	RP53R1	RP53R0	—	—	RP52R5	RP52R4	RP52R3	RP52R2	RP52R1	RP52R0
RPOR11	—	—	RP55R5	RP55R4	RP55R3	RP55R2	RP55R1	RP55R0	—	—	RP54R5	RP54R4	RP54R3	RP54R2	RP54R1	RP54R0
RPOR12	—	—	RP57R5	RP57R4	RP57R3	RP57R2	RP57R1	RP57R0	—	—	RP56R5	RP56R4	RP56R3	RP56R2	RP56R1	RP56R0
RPOR13	—	—	RP59R5	RP59R4	RP59R3	RP59R2	RP59R1	RP59R0	—	—	RP58R5	RP58R4	RP58R3	RP58R2	RP58R1	RP58R0
RPOR14	—	—	RP61R5	RP61R4	RP61R3	RP61R2	RP61R1	RP61R0	—	—	RP60R5	RP60R4	RP60R3	RP60R2	RP60R1	RP60R0
RPOR15	—	—	RP63R5	RP63R4	RP63R3	RP63R2	RP63R1	RP63R0	—	—	RP62R5	RP62R4	RP62R3	RP62R2	RP62R1	RP62R0
RPOR16	—	—	RP65R5	RP65R4	RP65R3	RP65R2	RP65R1	RP65R0	—	—	RP64R5	RP64R4	RP64R3	RP64R2	RP64R1	RP64R0
RPOR17	—	—	RP67R5	RP67R4	RP67R3	RP67R2	RP67R1	RP67R0	—	—	RP66R5	RP66R4	RP66R3	RP66R2	RP66R1	RP66R0
RPOR18	—	—	RP69R5	RP69R4	RP69R3	RP69R2	RP69R1	RP69R0	—	—	RP68R5	RP68R4	RP68R3	RP68R2	RP68R1	RP68R0
RPOR19	—	—	RP71R5	RP71R4	RP71R3	RP71R2	RP71R1	RP71R0	—	—	RP70R5	RP70R4	RP70R3	RP70R2	RP70R1	RP70R0
RPOR20(1)	—	—	RP171R5	RP171R4	RP171R3	RP177R2	RP171R1	RP171R0	—	—	RP170R5	RP170R4	RP170R3	RP170R2	RP170R1	RP170R0
RPOR21(1)	—	—	RP173R5	RP173R4	RP173R3	RP173R2	RP173R1	RP173R0	—	—	RP172R5	RP172R4	RP172R3	RP172R2	RP172R1	RP172R0
RPOR22(1)	—	—	RP175R5	RP175R4	RP175R3	RP175R2	RP175R1	RP175R0	—	—	RP174R5	RP174R4	RP174R3	RP174R2	RP174R1	RP174R0

Note 1: The RPOR20, RPOR21 and RPOR22 registers are for virtual output pins.

© 2017-2018 Microchip Technology Inc.

4.6.6 I/O HELPFUL TIPS

1. In some cases, certain pins, as defined in Table 24-18 under “Injection Current”, have internal protection diodes to VDD and VSS. The term, “Injection Current”, is also referred to as “Clamp Current”. On designated pins, with sufficient external current-limiting precautions by the user, I/O pin input voltages are allowed to be greater or lesser than the data sheet absolute maximum ratings, with respect to the VSS and VDD supplies. Note that when the user application forward biases either of the high or low-side internal input clamp diodes, that the resulting current being injected into the device, that is clamped internally by the VDD and VSS power rails, may affect the ADC accuracy by four to six counts.
2. I/O pins that are shared with any analog input pin (i.e., ANx) are always analog pins, by default, after any Reset. Consequently, configuring a pin as an analog input pin automatically disables the digital input pin buffer and any attempt to read the digital input level by reading PORTx or LATx will always return a ‘0’, regardless of the digital logic level on the pin. To use a pin as a digital I/O pin on a shared ANx pin, the user application needs to configure the Analog Select for PORTx registers, in the I/O ports module (i.e., ANSELx), by setting the appropriate bit that corresponds to that I/O port pin to a ‘0’.

Note:	Although it is not possible to use a digital input pin when its analog function is enabled, it is possible to use the digital I/O output function, TRISx = 0x0, while the analog function is also enabled. However, this is not recommended, particularly if the analog input is connected to an external analog voltage source, which would create signal contention between the analog signal and the output pin driver.

3. Most I/O pins have multiple functions. Referring to the device pin diagrams in this data sheet, the priorities of the functions allocated to any pins are indicated by reading the pin name, from left-to-right. The left most function name takes precedence over any function to its right in the naming convention. For example: AN16/T2CK/T7CK/RC1; this indicates that AN16 is the highest priority in this example and will supersede all other functions to its right in the list. Those other functions to its right, even if enabled, would not work as long as any other function to its left was enabled. This rule applies to all of the functions listed for a given pin.
4. Each pin has an internal weak pull-up resistor and pull-down resistor that can be configured using the CNPUx and CNPDx registers, respectively. These resistors eliminate the need for external resistors in certain applications. The internal pull-up is up to ~(VDD – 0.8), not VDD. This value is still above the minimum VIH of CMOS and TTL devices.
5. When driving LEDs directly, the I/O pin can source or sink more current than what is specified in the VOH/IOH and VOL/IOL DC characteristics specification. The respective IOH and IOL current rating only applies to maintaining the corresponding output at or above the VOH, and at or below the VOL levels. However, for LEDs, unlike digital inputs of an externally connected device, they are not governed by the same minimum VIH/VIL levels. An I/O pin output can safely sink or source any current less than that listed in the Absolute Maximum Ratings in **Section 24.0 “Electrical Characteristics”** of this data sheet. For example:

   VOH = 2.4v @ IOH = -8 mA and VDD = 3.3V

   The maximum output current sourced by any 8 mA I/O pin = 12 mA.

   LED source current < 12 mA is technically permitted.

6. The Peripheral Pin Select (PPS) pin mapping rules are as follows:
   a) Only one “output” function can be active on a given pin at any time, regardless if it is a dedicated or remappable function (one pin, one output).
   b) It is possible to assign a “remappable output” function to multiple pins and externally short or tie them together for increased current drive.
   c) If any “dedicated output” function is enabled on a pin, it will take precedence over any remappable “output” function.
   d) If any “dedicated digital” (input or output) function is enabled on a pin, any number of “input” remappable functions can be mapped to the same pin.
   e) If any “dedicated analog” function(s) are enabled on a given pin, “digital input(s)” of any kind will all be disabled, although a single “digital output”, at the user’s cautionary discretion, can be enabled and active as long as there is no signal contention with an external analog input signal. For example, it is possible for the ADC to convert the digital output logic level, or to toggle a digital output on a comparator or ADC input, provided there is no external analog input, such as for a Built-In Self-Test.
   f) Any number of “input” remappable functions can be mapped to the same pin(s) at the same time, including to any pin with a single output from either a dedicated or remappable “output”.
   g) The TRISx registers control *only* the digital I/O output buffer. Any other dedicated or remappable active “output” will automatically override the TRISx setting. The TRISx register *does not* control the digital logic “input” buffer. Remappable digital “inputs” do not automatically override TRISx settings, which means that the TRISx bit must be set to input for pins with only remappable input function(s) assigned.
   h) All analog pins are enabled by default after any Reset and the corresponding digital input buffer on the pin has been disabled. Only the Analog Select for PORTx (ANSELx) registers control the digital input buffer, *not* the TRISx register. The user must disable the analog function on a pin using the Analog Select for PORTx registers in order to use any “digital input(s)” on a corresponding pin, no exceptions.

4.6.7 I/O PORTS RESOURCES

Many useful resources are provided on the main product page of the Microchip web site for the devices listed in this data sheet. This product page contains the latest updates and additional information.

4.6.7.1 Key Resources

- **“I/O Ports with Edge Detect”** (DS70005322) in the *“dsPIC33/PIC24 Family Reference Manual”*
- Code Samples
- Application Notes
- Software Libraries
- Webinars
- All Related *“dsPIC33/PIC24 Family Reference Manual”* Sections
- Development Tools

© 2017-2018 Microchip Technology Inc.

4.6.8 PERIPHERAL PIN SELECT REGISTERS

REGISTER 4-35: RPCON: PERIPHERAL REMAPPING CONFIGURATION REGISTER

U-0	U-0	U-0	U-0	R/W-0	U-0	U-0	U-0
—	—	—	—	IOLOCK	—	—	—
bit 15							bit 8

U-0	U-0	U-0	U-0	U-0	U-0	U-0	U-0
—	—	—	—	—	—	—	—
bit 7							bit 0

Legend:			
R = Readable bit	W = Writable bit	U = Unimplemented bit, read as ‘0’	
-n = Value at POR	‘1’ = Bit is set	‘0’ = Bit is cleared	x = Bit is unknown

bit 15-12 **Unimplemented:** Read as ‘0’

bit 11 **IOLOCK:** Peripheral Remapping Register Lock bit
1 = All Peripheral Remapping registers are locked and cannot be written
0 = All Peripheral Remapping registers are unlocked and can be written

bit 10-0 **Unimplemented:** Read as ‘0’

REGISTER 4-36: RPINR0: PERIPHERAL PIN SELECT INPUT REGISTER 0

R/W-0	R/W-0	R/W-0	R/W-0	R/W-0	R/W-0	R/W-0	R/W-0
INT1R7	INT1R6	INT1R5	INT1R4	INT1R3	INT1R2	INT1R1	INT1R0
bit 15							bit 8

U-0	U-0	U-0	U-0	U-0	U-0	U-0	U-0
—	—	—	—	—	—	—	—
bit 7							bit 0

Legend:			
R = Readable bit	W = Writable bit	U = Unimplemented bit, read as ‘0’	
-n = Value at POR	‘1’ = Bit is set	‘0’ = Bit is cleared	x = Bit is unknown

bit 15-8 **INT1R<7:0>:** Assign External Interrupt 1 (S1INT1) to the Corresponding S1RPn Pin bits
See Table 4-27.

bit 7-0 **Unimplemented:** Read as ‘0’

REGISTER 4-37: RPINR1: PERIPHERAL PIN SELECT INPUT REGISTER 1

R/W-0	R/W-0	R/W-0	R/W-0	R/W-0	R/W-0	R/W-0	R/W-0
INT3R15	INT3R14	INT3R13	INT3R12	INT3R11	INT3R10	INT3R9	INT3R8
bit 15							bit 8

R/W-0	R/W-0	R/W-0	R/W-0	R/W-0	R/W-0	R/W-0	R/W-0
INT2R7	INT2R6	INT2R5	INT2R4	INT2R3	INT2R2	INT2R1	INT2R0
bit 7							bit 0

Legend:			
R = Readable bit	W = Writable bit	U = Unimplemented bit, read as ‘0’	
-n = Value at POR	‘1’ = Bit is set	‘0’ = Bit is cleared	x = Bit is unknown

bit 15-8 **INT3R<15:8>:** Assign External Interrupt 3 (S1INT3) to the Corresponding S1RPn Pin bits
See Table 4-27.

bit 7-0 **INT2R<7:0>:** Assign External Interrupt 2 (S1INT2) to the Corresponding S1RPn Pin bits
See Table 4-27.

REGISTER 4-38: RPINR2: PERIPHERAL PIN SELECT INPUT REGISTER 2

R/W-0	R/W-0	R/W-0	R/W-0	R/W-0	R/W-0	R/W-0	R/W-0
T1CKR7	T1CKR6	T1CKR5	T1CKR4	T1CKR3	T1CKR2	T1CKR1	T1CKR0
bit 15							bit 8

U-0	U-0	U-0	U-0	U-0	U-0	U-0	U-0
—	—	—	—	—	—	—	—
bit 7							bit 0

Legend:			
R = Readable bit	W = Writable bit	U = Unimplemented bit, read as ‘0’	
-n = Value at POR	‘1’ = Bit is set	‘0’ = Bit is cleared	x = Bit is unknown

bit 15-8 **T1CKR<7:0>:** Assign Timer1 External Clock (S1T1CK) to the Corresponding S1RPn Pin bits
See Table 4-27.

bit 7-0 **Unimplemented:** Read as ‘0’

© 2017-2018 Microchip Technology Inc.

REGISTER 4-39: RPINR3: PERIPHERAL PIN SELECT INPUT REGISTER 3

R/W-0	R/W-0	R/W-0	R/W-0	R/W-0	R/W-0	R/W-0	R/W-0
ICM1R7	ICM1R6	ICM1R5	ICM1R4	ICM1R3	ICM1R2	ICM1R1	ICM1R0
bit 15							bit 8

R/W-0	R/W-0	R/W-0	R/W-0	R/W-0	R/W-0	R/W-0	R/W-0
TCKI1R7	TCKI1R6	TCKI1R5	TCKI1R4	TCKI1R3	TCKI1R2	TCKI1R1	TCKI1R0
bit 7							bit 0

Legend:			
R = Readable bit	W = Writable bit	U = Unimplemented bit, read as ‘0’	
-n = Value at POR	‘1’ = Bit is set	‘0’ = Bit is cleared	x = Bit is unknown

bit 15-8 **ICM1R<7:0>:** Assign SCCP Capture 1 (S1ICM1) to the Corresponding S1RPn Pin bits
See Table 4-27.

bit 7-0 **TCKI1R<7:0>:** Assign SCCP Timer1 (S1TCKI1) to the Corresponding S1RPn Pin bits
See Table 4-27.

REGISTER 4-40: RPINR4: PERIPHERAL PIN SELECT INPUT REGISTER 4

R/W-0	R/W-0	R/W-0	R/W-0	R/W-0	R/W-0	R/W-0	R/W-0
ICM2R7	ICM2R6	ICM2R5	ICM2R4	ICM2R3	ICM2R2	ICM2R1	ICM2R0
bit 15							bit 8

R/W-0	R/W-0	R/W-0	R/W-0	R/W-0	R/W-0	R/W-0	R/W-0
TCKI2R7	TCKI2R6	TCKI2R5	TCKI2R4	TCKI2R3	TCKI2R2	TCKI2R1	TCKI2R0
bit 7							bit 0

Legend:			
R = Readable bit	W = Writable bit	U = Unimplemented bit, read as ‘0’	
-n = Value at POR	‘1’ = Bit is set	‘0’ = Bit is cleared	x = Bit is unknown

bit 15-8 **ICM2R<7:0>:** Assign SCCP Capture 2 (S1ICM2) to the Corresponding S1RPn Pin bits
See Table 4-27.

bit 7-0 **TCKI2R<7:0>:** Assign SCCP Timer2 (S1TCKI2) to the Corresponding S1RPn Pin bits
See Table 4-27.

REGISTER 4-41: RPINR5: PERIPHERAL PIN SELECT INPUT REGISTER 5

R/W-0	R/W-0	R/W-0	R/W-0	R/W-0	R/W-0	R/W-0	R/W-0
ICM3R7	ICM3R6	ICM3R5	ICM3R4	ICM3R3	ICM3R2	ICM3R1	ICM3R0
bit 15							bit 8

R/W-0	R/W-0	R/W-0	R/W-0	R/W-0	R/W-0	R/W-0	R/W-0
TCKI3R7	TCKI3R6	TCKI3R5	TCKI3R4	TCKI3R3	TCKI3R2	TCKI3R1	TCKI3R0
bit 7							bit 0

Legend:			
R = Readable bit	W = Writable bit	U = Unimplemented bit, read as ‘0’	
-n = Value at POR	‘1’ = Bit is set	‘0’ = Bit is cleared	x = Bit is unknown

bit 15-8 **ICM3R<7:0>:** Assign SCCP Capture 3 (S1ICM3) to the Corresponding S1RPn Pin bits
See Table 4-27.

bit 7-0 **TCKI3R<7:0>:** Assign SCCP Timer3 (S1TCKI3) to the Corresponding S1RPn Pin bits
See Table 4-27.

REGISTER 4-42: RPINR6: PERIPHERAL PIN SELECT INPUT REGISTER 6

R/W-0	R/W-0	R/W-0	R/W-0	R/W-0	R/W-0	R/W-0	R/W-0
ICM4R7	ICM4R6	ICM4R5	ICM4R4	ICM4R3	ICM4R2	ICM4R1	ICM4R0
bit 15							bit 8

R/W-0	R/W-0	R/W-0	R/W-0	R/W-0	R/W-0	R/W-0	R/W-0
TCKI4R7	TCKI4R6	TCKI4R5	TCKI4R4	TCKI4R3	TCKI4R2	TCKI4R1	TCKI4R0
bit 7							bit 0

Legend:			
R = Readable bit	W = Writable bit	U = Unimplemented bit, read as ‘0’	
-n = Value at POR	‘1’ = Bit is set	‘0’ = Bit is cleared	x = Bit is unknown

bit 15-8 **ICM4R<7:0>:** Assign SCCP Capture 4 (S1ICM4) to the Corresponding S1RPn Pin bits
See Table 4-27.

bit 7-0 **TCKI4R<7:0>:** Assign SCCP Timer4 (S1TCKI4) to the Corresponding S1RPn Pin bits
See Table 4-27.

© 2017-2018 Microchip Technology Inc.

REGISTER 4-43: RPINR11: PERIPHERAL PIN SELECT INPUT REGISTER 11

R/W-0	R/W-0	R/W-0	R/W-0	R/W-0	R/W-0	R/W-0	R/W-0
OCFBR7	OCFBR6	OCFBR5	OCFBR4	OCFBR3	OCFBR2	OCFBR1	OCFBR0
bit 15							bit 8

R/W-0	R/W-0	R/W-0	R/W-0	R/W-0	R/W-0	R/W-0	R/W-0
OCFAR7	OCFAR6	OCFAR5	OCFAR4	OCFAR3	OCFAR2	OCFAR1	OCFAR0
bit 7							bit 0

Legend:			
R = Readable bit	W = Writable bit	U = Unimplemented bit, read as ‘0’	
-n = Value at POR	‘1’ = Bit is set	‘0’ = Bit is cleared	x = Bit is unknown

bit 15-8 **OCFBR<7:0>:** Assign Output Compare Fault B (S1OCFB) to the Corresponding S1RPn Pin bits
See Table 4-27

bit 7-0 **OCFBA<7:0>:** Assign Output Compare Fault A (S1OCFA) to the Corresponding S1RPn Pin bits
See Table 4-27

REGISTER 4-44: RPINR12: PERIPHERAL PIN SELECT INPUT REGISTER 12

R/W-0	R/W-0	R/W-0	R/W-0	R/W-0	R/W-0	R/W-0	R/W-0
PCI9R7	PCI9R6	PCI9R5	PCI9R4	PCI9R3	PCI9R2	PCI9R1	PCI9R0
bit 15							bit 8

R/W-0	R/W-0	R/W-0	R/W-0	R/W-0	R/W-0	R/W-0	R/W-0
PCI8R7	PCI8R6	PCI8R5	PCI8R4	PCI8R3	PCI8R2	PCI8R1	PCI8R0
bit 7							bit 0

Legend:			
R = Readable bit	W = Writable bit	U = Unimplemented bit, read as ‘0’	
-n = Value at POR	‘1’ = Bit is set	‘0’ = Bit is cleared	x = Bit is unknown

bit 15-8 **PCI9R<7:0>:** Assign PWM Input 9 (S1PCI9) to the Corresponding S1RPn Pin bits
See Table 4-27.

bit 7-0 **PCI8R<7:0>:** Assign PWM Input 8 (S1PCI8) to the Corresponding S1RPn Pin bits
See Table 4-27.

REGISTER 4-45: RPINR13: PERIPHERAL PIN SELECT INPUT REGISTER 13

R/W-0	R/W-0	R/W-0	R/W-0	R/W-0	R/W-0	R/W-0	R/W-0
PCI11R7	PCI11R6	PCI11R5	PCI11R4	PCI11R3	PCI11R2	PCI11R1	PCI11R0
bit 15							bit 8

R/W-0	R/W-0	R/W-0	R/W-0	R/W-0	R/W-0	R/W-0	R/W-0
PCI10R7	PCI10R6	PCI10R5	PCI10R4	PCI10R3	PCI10R2	PCI10R1	PCI10R0
bit 7							bit 0

Legend:			
R = Readable bit	W = Writable bit	U = Unimplemented bit, read as ‘0’	
-n = Value at POR	‘1’ = Bit is set	‘0’ = Bit is cleared	x = Bit is unknown

bit 15-8 **PCI11R<7:0>:** Assign PWM Input 11 (S1PCI11) to the Corresponding S1RPn Pin bits
See Table 4-27.

bit 7-0 **PCI10R<7:0>:** Assign PWM Input 10 (S1PCI10) to the Corresponding S1RPn Pin bits
See Table 4-27.

REGISTER 4-46: RPINR14: PERIPHERAL PIN SELECT INPUT REGISTER 14

R/W-0	R/W-0	R/W-0	R/W-0	R/W-0	R/W-0	R/W-0	R/W-0
QEIB1R7	QEIB1R6	QEIB1R5	QEIB1R4	QEIB1R3	QEIB1R2	QEIB1R1	QEIB1R0
bit 15							bit 8

R/W-0	R/W-0	R/W-0	R/W-0	R/W-0	R/W-0	R/W-0	R/W-0
QEIA1R7	QEIA1R6	QEIA1R5	QEIA1R4	QEIA1R3	QEIA1R2	QEIA1R1	QEIA1R0
bit 7							bit 0

Legend:			
R = Readable bit	W = Writable bit	U = Unimplemented bit, read as ‘0’	
-n = Value at POR	‘1’ = Bit is set	‘0’ = Bit is cleared	x = Bit is unknown

bit 15-8 **QEIB1R<7:0>:** Assign QEI Input B (S1QEIB1) to the Corresponding S1RPn Pin bits
See Table 4-27.

bit 7-0 **QEIA1R<7:0>:** Assign QEI Input A (S1QEIA1) to the Corresponding S1RPn Pin bits
See Table 4-27.

© 2017-2018 Microchip Technology Inc.

REGISTER 4-47: RPINR15: PERIPHERAL PIN SELECT INPUT REGISTER 15

R/W-0	R/W-0	R/W-0	R/W-0	R/W-0	R/W-0	R/W-0	R/W-0
QEIHOM1R7	QEIHOM1R6	QEIHOM1R5	QEIHOM1R4	QEIHOM1R3	QEIHOM1R2	QEIHOM1R1	QEIHOM1R0
bit 15							bit 8

R/W-0	R/W-0	R/W-0	R/W-0	R/W-0	R/W-0	R/W-0	R/W-0
QEINDX1R7	QEINDX1R6	QEINDX1R5	QEINDX1R4	QEINDX1R3	QEINDX1R2	QEINDX1R1	QEINDX1R0
bit 7							bit 0

Legend:			
R = Readable bit	W = Writable bit	U = Unimplemented bit, read as ‘0’	
-n = Value at POR	‘1’ = Bit is set	‘0’ = Bit is cleared	x = Bit is unknown

bit 15-8 **QEIHOM1R<7:0>:** Assign QEI Home 1 Input (S1QEIHOM1) to the Corresponding S1RPn Pin bits
See Table 4-27.

bit 7-0 **QEINDX1R<7:0>:** Assign QEI Index 1 Input (S1QEINDX1) to the Corresponding S1RPn Pin bits
See Table 4-27.

REGISTER 4-48: RPINR18: PERIPHERAL PIN SELECT INPUT REGISTER 18

R/W-0	R/W-0	R/W-0	R/W-0	R/W-0	R/W-0	R/W-0	R/W-0
U1DSRR7	U1DSRR6	U1DSRR5	U1DSRR4	U1DSRR3	U1DSRR2	U1DSRR1	U1DSRR0
bit 15							bit 8

R/W-0	R/W-0	R/W-0	R/W-0	R/W-0	R/W-0	R/W-0	R/W-0
U1RXR7	U1RXR6	U1RXR5	U1RXR4	U1RXR3	U1RXR2	U1RXR1	U1RXR0
bit 7							bit 0

Legend:			
R = Readable bit	W = Writable bit	U = Unimplemented bit, read as ‘0’	
-n = Value at POR	‘1’ = Bit is set	‘0’ = Bit is cleared	x = Bit is unknown

bit 15-8 **U1DSRR<7:0>:** Assign UART1 Data-Set-Ready ($\overline{\text{S1U1DSR}}$) to the Corresponding S1RPn Pin bits
See Table 4-27.

bit 7-0 **U1RXR<7:0>:** Assign UART1 Receive (S1U1RX) to the Corresponding S1RPn Pin bits
See Table 4-27.

REGISTER 4-49: RPINR20: PERIPHERAL PIN SELECT INPUT REGISTER 20

R/W-0	R/W-0	R/W-0	R/W-0	R/W-0	R/W-0	R/W-0	R/W-0
SCK1R7	SCK1R6	SCK1R5	SCK1R4	SCK1R3	SCK1R2	SCK1R1	SCK1R0
bit 15							bit 8

R/W-0	R/W-0	R/W-0	R/W-0	R/W-0	R/W-0	R/W-0	R/W-0
SDI1R7	SDI1R6	SDI1R5	SDI1R4	SDI1R3	SDI1R2	SDI1R1	SDI1R0
bit 7							bit 0

Legend:			
R = Readable bit	W = Writable bit	U = Unimplemented bit, read as ‘0’	
-n = Value at POR	‘1’ = Bit is set	‘0’ = Bit is cleared	x = Bit is unknown

bit 15-8 **SCK1R<7:0>:** Assign SPI1 Clock Input (S1SCK1) to the Corresponding S1RPn Pin bits
See Table 4-27.

bit 7-0 **SDI1R<7:0>:** Assign SPI1 Data Input (S1SDI1) to the Corresponding S1RPn Pin bits
See Table 4-27.

REGISTER 4-50: RPINR21: PERIPHERAL PIN SELECT INPUT REGISTER 21

R/W-0	R/W-0	R/W-0	R/W-0	R/W-0	R/W-0	R/W-0	R/W-0
REFOIR7	REFOIR6	REFOIR5	REFOIR4	REFOIR3	REFOIR2	REFOIR1	REFOIR0
bit 15							bit 8

R/W-0	R/W-0	R/W-0	R/W-0	R/W-0	R/W-0	R/W-0	R/W-0
SS1R7	SS1R6	SS1R5	SS1R4	SS1R3	SS1R2	SS1R1	SS1R0
bit 7							bit 0

Legend:			
R = Readable bit	W = Writable bit	U = Unimplemented bit, read as ‘0’	
-n = Value at POR	‘1’ = Bit is set	‘0’ = Bit is cleared	x = Bit is unknown

bit 15-8 **REFOIR<7:0>:** Assign Reference Clock Input (S1REFOI) to the Corresponding S1RPn Pin bits
See Table 4-27.

bit 7-0 **SS1R<7:0>:** Assign SPI1 Slave Select ($\overline{\text{S1SS1}}$) to the Corresponding S1RPn Pin bits
See Table 4-27.

© 2017-2018 Microchip Technology Inc.

REGISTER 4-51: RPINR23: PERIPHERAL PIN SELECT INPUT REGISTER 23

R/W-0	R/W-0	R/W-0	R/W-0	R/W-0	R/W-0	R/W-0	R/W-0
U1CTSR7	U1CTSR6	U1CTSR5	U1CTSR4	U1CTSR3	U1CTSR2	U1CTSR1	U1CTSR0
bit 15							bit 8

U-0	U-0	U-0	U-0	U-0	U-0	U-0	U-0
—	—	—	—	—	—	—	—
bit 7							bit 0

Legend:			
R = Readable bit	W = Writable bit	U = Unimplemented bit, read as ‘0’	
-n = Value at POR	‘1’ = Bit is set	‘0’ = Bit is cleared	x = Bit is unknown

bit 15-8 **U1CTSR<7:0>:** Assign UART1 Clear-to-Send ($\overline{\text{S1U1CTS}}$) to the Corresponding S1RPn Pin bits
See Table 4-27.

bit 7-0 **Unimplemented:** Read as ‘0’

REGISTER 4-52: RPINR37: PERIPHERAL PIN SELECT INPUT REGISTER 37

R/W-0	R/W-0	R/W-0	R/W-0	R/W-0	R/W-0	R/W-0	R/W-0
PCI17R7	PCI17R6	PCI17R5	PCI17R4	PCI17R3	PCI17R2	PCI17R1	PCI17R0
bit 15							bit 8

U-0	U-0	U-0	U-0	U-0	U-0	U-0	U-0
—	—	—	—	—	—	—	—
bit 7							bit 0

Legend:			
R = Readable bit	W = Writable bit	U = Unimplemented bit, read as ‘0’	
-n = Value at POR	‘1’ = Bit is set	‘0’ = Bit is cleared	x = Bit is unknown

bit 15-8 **PCI17R<7:0>:** Assign PWM Input 17 (S1PCI17) to the Corresponding S1RPn Pin bits
See Table 4-27.

bit 7-0 **Unimplemented:** Read as ‘0’

REGISTER 4-53: RPINR38: PERIPHERAL PIN SELECT INPUT REGISTER 38

U-0	U-0	U-0	U-0	U-0	U-0	U-0	U-0
—	—	—	—	—	—	—	—
bit 15							bit 8

R/W-0	R/W-0	R/W-0	R/W-0	R/W-0	R/W-0	R/W-0	R/W-0
PCI18R7	PCI18R6	PCI18R5	PCI18R4	PCI18R3	PCI18R2	PCI18R1	PCI18R0
bit 7							bit 0

Legend:			
R = Readable bit	W = Writable bit	U = Unimplemented bit, read as ‘0’	
-n = Value at POR	‘1’ = Bit is set	‘0’ = Bit is cleared	x = Bit is unknown

bit 15-8 **Unimplemented:** Read as ‘0’

bit 7-0 **PCI18R<7:0>:** Assign PWM Input 18 (S1PCI18) to the Corresponding S1RPn Pin bits
See Table 4-27.

REGISTER 4-54: RPINR42: PERIPHERAL PIN SELECT INPUT REGISTER 42

R/W-0	R/W-0	R/W-0	R/W-0	R/W-0	R/W-0	R/W-0	R/W-0
PCI13R7	PCI13R6	PCI13R5	PCI13R4	PCI13R3	PCI13R2	PCI13R1	PCI13R0
bit 15							bit 8

R/W-0	R/W-0	R/W-0	R/W-0	R/W-0	R/W-0	R/W-0	R/W-0
PCI12R7	PCI12R6	PCI12R5	PCI12R4	PCI12R3	PCI12R2	PCI12R1	PCI12R0
bit 7							bit 0

Legend:			
R = Readable bit	W = Writable bit	U = Unimplemented bit, read as ‘0’	
-n = Value at POR	‘1’ = Bit is set	‘0’ = Bit is cleared	x = Bit is unknown

bit 15-8 **PCI13R<7:0>:** Assign PWM Input 13 (S1PCI13) to the Corresponding S1RPn Pin bits
See Table 4-27.

bit 7-0 **PCI12R<7:0>:** Assign PWM Input 12 (S1PCI12) to the Corresponding S1RPn Pin bits
See Table 4-27.

© 2017-2018 Microchip Technology Inc.

REGISTER 4-55: RPINR43: PERIPHERAL PIN SELECT INPUT REGISTER 43

R/W-0	R/W-0	R/W-0	R/W-0	R/W-0	R/W-0	R/W-0	R/W-0
PCI15R7	PCI15R6	PCI15R5	PCI15R4	PCI15R3	PCI15R2	PCI15R1	PCI15R0
bit 15							bit 8

R/W-0	R/W-0	R/W-0	R/W-0	R/W-0	R/W-0	R/W-0	R/W-0
PCI14R7	PCI14R6	PCI14R5	PCI14R4	PCI14R3	PCI14R2	PCI14R1	PCI14R0
bit 7							bit 0

Legend:			
R = Readable bit	W = Writable bit	U = Unimplemented bit, read as ‘0’	
-n = Value at POR	‘1’ = Bit is set	‘0’ = Bit is cleared	x = Bit is unknown

bit 15-8 **PCI15R<7:0>:** Assign PWM Input 15 (S1PCI15) to the Corresponding S1RPn Pin bits
See Table 4-27.

bit 7-0 **PCI14R<7:0>:** Assign PWM Input 14 (S1PCI14) to the Corresponding S1RPn Pin bits
See Table 4-27.

REGISTER 4-56: RPINR44: PERIPHERAL PIN SELECT INPUT REGISTER 44

U-0	U-0	U-0	U-0	U-0	U-0	U-0	U-0
—	—	—	—	—	—	—	—
bit 15							bit 8

R/W-0	R/W-0	R/W-0	R/W-0	R/W-0	R/W-0	R/W-0	R/W-0
PCI16R7	PCI16R6	PCI16R5	PCI16R4	PCI16R3	PCI16R2	PCI16R1	PCI16R0
bit 7							bit 0

Legend:			
R = Readable bit	W = Writable bit	U = Unimplemented bit, read as ‘0’	
-n = Value at POR	‘1’ = Bit is set	‘0’ = Bit is cleared	x = Bit is unknown

bit 15-8 **Unimplemented:** Read as ‘0’

bit 7-0 **PCI16<7:0>:** Assign PWM Input 16 (S1PCI16) to the Corresponding S1RPn Pin bits
See Table 4-27.

REGISTER 4-57: RPINR45: PERIPHERAL PIN SELECT INPUT REGISTER 45

R/W-0	R/W-0	R/W-0	R/W-0	R/W-0	R/W-0	R/W-0	R/W-0
CLCINAR7	CLCINAR6	CLCINAR5	CLCINAR4	CLCINAR3	CLCINAR2	CLCINAR1	CLCINAR0
bit 15							bit 8

U-0	U-0	U-0	U-0	U-0	U-0	U-0	U-0
—	—	—	—	—	—	—	—
bit 7							bit 0

Legend:			
R = Readable bit	W = Writable bit	U = Unimplemented bit, read as ‘0’	
-n = Value at POR	‘1’ = Bit is set	‘0’ = Bit is cleared	x = Bit is unknown

bit 15-8 **CLCINAR<7:0>:** Assign CLC Input A (S1CLCINA) to the Corresponding S1RPn Pin bits
See Table 4-27.

bit 7-0 **Unimplemented:** Read as ‘0’

REGISTER 4-58: RPINR46: PERIPHERAL PIN SELECT INPUT REGISTER 46

R/W-0	R/W-0	R/W-0	R/W-0	R/W-0	R/W-0	R/W-0	R/W-0
CLCINCR7	CLCINCR6	CLCINCR5	CLCINCR4	CLCINCR3	CLCINCR2	CLCINCR1	CLCINCR0
bit 15							bit 8

R/W-0	R/W-0	R/W-0	R/W-0	R/W-0	R/W-0	R/W-0	R/W-0
CLCINBR7	CLCINBR6	CLCINBR5	CLCINBR4	CLCINBR3	CLCINBR2	CLCINBR1	CLCINBR0
bit 7							bit 0

Legend:			
R = Readable bit	W = Writable bit	U = Unimplemented bit, read as ‘0’	
-n = Value at POR	‘1’ = Bit is set	‘0’ = Bit is cleared	x = Bit is unknown

bit 15-8 **CLCINCR<7:0>:** Assign CLC Input C (S1CLCINC) to the Corresponding S1RPn Pin bits
See Table 4-27.

bit 7-0 **CLCINBR<7:0>:** Assign CLC Input B (S1CLCINB) to the Corresponding S1RPn Pin bits
See Table 4-27.

© 2017-2018 Microchip Technology Inc.

REGISTER 4-59: RPINR47: PERIPHERAL PIN SELECT INPUT REGISTER 47

R/W-0	R/W-0	R/W-0	R/W-0	R/W-0	R/W-0	R/W-0	R/W-0
ADCTRGR7	ADCTRGR6	ADCTRGR5	ADCTRGR4	ADCTRGR3	ADCTRGR2	ADCTRGR1	ADCTRGR0
bit 15							bit 8

R/W-0	R/W-0	R/W-0	R/W-0	R/W-0	R/W-0	R/W-0	R/W-0
CLCINDR7	CLCINDR6	CLCINDR5	CLCINDR4	CLCINDR3	CLCINDR2	CLCINDR1	CLCINDR0
bit 7							bit 0

Legend:			
R = Readable bit	W = Writable bit	U = Unimplemented bit, read as ‘0’	
-n = Value at POR	‘1’ = Bit is set	‘0’ = Bit is cleared	x = Bit is unknown

bit 15-8 **ADCTRGR<7:0>:** Assign ADC External Trigger Input (S1ADCTRG) to the Corresponding S1RPn Pin bits
See Table 4-27.

bit 7-0 **CLCINDR<7:0>:** Assign CLC Input D (S1CLCIND) to the Corresponding S1RPn Pin bits
See Table 4-27.

REGISTER 4-60: RPOR0: PERIPHERAL PIN SELECT OUTPUT REGISTER 0

U-0	U-0	R/W-0	R/W-0	R/W-0	R/W-0	R/W-0	R/W-0
—	—	RP33R5	RP33R4	RP33R3	RP33R2	RP33R1	RP33R0
bit 15							bit 8

U-0	U-0	R/W-0	R/W-0	R/W-0	R/W-0	R/W-0	R/W-0
—	—	RP32R5	RP32R4	RP32R3	RP32R2	RP32R1	RP32R0
bit 7							bit 0

Legend:			
R = Readable bit	W = Writable bit	U = Unimplemented bit, read as ‘0’	
-n = Value at POR	‘1’ = Bit is set	‘0’ = Bit is cleared	x = Bit is unknown

bit 15-14 **Unimplemented:** Read as ‘0’

bit 13-8 **RP33R<5:0>:** Peripheral Output Function is Assigned to S1RP33 Output Pin bits (see Table 4-31 for peripheral function numbers)

bit 7-6 **Unimplemented:** Read as ‘0’

bit 5-0 **RP32R<5:0>:** Peripheral Output Function is Assigned to S1RP32 Output Pin bits (see Table 4-31 for peripheral function numbers)

REGISTER 4-61: RPOR1: PERIPHERAL PIN SELECT OUTPUT REGISTER 1

U-0	U-0	R/W-0	R/W-0	R/W-0	R/W-0	R/W-0	R/W-0
—	—	RP35R5	RP35R4	RP35R3	RP35R2	RP35R1	RP35R0
bit 15							bit 8

U-0	U-0	R/W-0	R/W-0	R/W-0	R/W-0	R/W-0	R/W-0
—	—	RP34R5	RP34R4	RP34R3	RP34R2	RP34R1	RP34R0
bit 7							bit 0

Legend:			
R = Readable bit	W = Writable bit	U = Unimplemented bit, read as ‘0’	
-n = Value at POR	‘1’ = Bit is set	‘0’ = Bit is cleared	x = Bit is unknown

bit 15-14 **Unimplemented:** Read as ‘0’

bit 13-8 **RP35R<5:0>:** Peripheral Output Function is Assigned to S1RP35 Output Pin bits (see Table 4-31 for peripheral function numbers)

bit 7-6 **Unimplemented:** Read as ‘0’

bit 5-0 **RP34R<5:0>:** Peripheral Output Function is Assigned to S1RP34 Output Pin bits (see Table 4-31 for peripheral function numbers)

© 2017-2018 Microchip Technology Inc.

REGISTER 4-62: RPOR2: PERIPHERAL PIN SELECT OUTPUT REGISTER 2

U-0	U-0	R/W-0	R/W-0	R/W-0	R/W-0	R/W-0	R/W-0
—	—	RP37R5	RP37R4	RP37R3	RP37R2	RP37R1	RP37R0
bit 15							bit 8

U-0	U-0	R/W-0	R/W-0	R/W-0	R/W-0	R/W-0	R/W-0
—	—	RP36R5	RP36R4	RP36R3	RP36R2	RP36R1	RP36R0
bit 7							bit 0

Legend:			
R = Readable bit	W = Writable bit	U = Unimplemented bit, read as ‘0’	
-n = Value at POR	‘1’ = Bit is set	‘0’ = Bit is cleared	x = Bit is unknown

bit 15-14 **Unimplemented:** Read as ‘0’

bit 13-8 **RP37R<5:0>:** Peripheral Output Function is Assigned to S1RP37 Output Pin bits (see Table 4-31 for peripheral function numbers)

bit 7-6 **Unimplemented:** Read as ‘0’

bit 5-0 **RP36R<5:0>:** Peripheral Output Function is Assigned to S1RP36 Output Pin bits (see Table 4-31 for peripheral function numbers)

REGISTER 4-63: RPOR3: PERIPHERAL PIN SELECT OUTPUT REGISTER 3

U-0	U-0	R/W-0	R/W-0	R/W-0	R/W-0	R/W-0	R/W-0
—	—	RP39R5	RP39R4	RP39R3	RP39R2	RP39R1	RP39R0
bit 15							bit 8

U-0	U-0	R/W-0	R/W-0	R/W-0	R/W-0	R/W-0	R/W-0
—	—	RP38R5	RP38R4	RP38R3	RP38R2	RP38R1	RP38R0
bit 7							bit 0

Legend:			
R = Readable bit	W = Writable bit	U = Unimplemented bit, read as ‘0’	
-n = Value at POR	‘1’ = Bit is set	‘0’ = Bit is cleared	x = Bit is unknown

bit 15-14 **Unimplemented:** Read as ‘0’

bit 13-8 **RP39R<5:0>:** Peripheral Output Function is Assigned to S1RP39 Output Pin bits (see Table 4-31 for peripheral function numbers)

bit 7-6 **Unimplemented:** Read as ‘0’

bit 5-0 **RP38R<5:0>:** Peripheral Output Function is Assigned to S1RP38 Output Pin bits (see Table 4-31 for peripheral function numbers)

REGISTER 4-64: RPOR4: PERIPHERAL PIN SELECT OUTPUT REGISTER 4

U-0	U-0	R/W-0	R/W-0	R/W-0	R/W-0	R/W-0	R/W-0
—	—	RP41R5	RP41R4	RP41R3	RP41R2	RP41R1	RP41R0
bit 15							bit 8

U-0	U-0	R/W-0	R/W-0	R/W-0	R/W-0	R/W-0	R/W-0
—	—	RP40R5	RP40R4	RP40R3	RP40R2	RP40R1	RP40R0
bit 7							bit 0

Legend:			
R = Readable bit	W = Writable bit	U = Unimplemented bit, read as ‘0’	
-n = Value at POR	‘1’ = Bit is set	‘0’ = Bit is cleared	x = Bit is unknown

bit 15-14 **Unimplemented:** Read as ‘0’

bit 13-8 **RP41R<5:0>:** Peripheral Output Function is Assigned to S1RP41 Output Pin bits (see Table 4-31 for peripheral function numbers)

bit 7-6 **Unimplemented:** Read as ‘0’

bit 5-0 **RP40R<5:0>:** Peripheral Output Function is Assigned to S1RP40 Output Pin bits (see Table 4-31 for peripheral function numbers)

REGISTER 4-65: RPOR5: PERIPHERAL PIN SELECT OUTPUT REGISTER 5

U-0	U-0	R/W-0	R/W-0	R/W-0	R/W-0	R/W-0	R/W-0
—	—	RP43	RP43	RP43	RP43	RP43	RP43
bit 15							bit 8

U-0	U-0	R/W-0	R/W-0	R/W-0	R/W-0	R/W-0	R/W-0
—	—	RP42R5	RP42R4	RP42R3	RP42R2	RP42R1	RP42R0
bit 7							bit 0

Legend:			
R = Readable bit	W = Writable bit	U = Unimplemented bit, read as ‘0’	
-n = Value at POR	‘1’ = Bit is set	‘0’ = Bit is cleared	x = Bit is unknown

bit 15-14 **Unimplemented:** Read as ‘0’

bit 13-8 **RP43R<5:0>:** Peripheral Output Function is Assigned to S1RP43 Output Pin bits (see Table 4-31 for peripheral function numbers)

bit 7-6 **Unimplemented:** Read as ‘0’

bit 5-0 **RP42R<5:0>:** Peripheral Output Function is Assigned to S1RP42 Output Pin bits (see Table 4-31 for peripheral function numbers)

© 2017-2018 Microchip Technology Inc.

REGISTER 4-66: RPOR6: PERIPHERAL PIN SELECT OUTPUT REGISTER 6

U-0	U-0	R/W-0	R/W-0	R/W-0	R/W-0	R/W-0	R/W-0
—	—	RP45R5	RP45R4	RP45R3	RP45R2	RP45R1	RP45R0
bit 15							bit 8

U-0	U-0	R/W-0	R/W-0	R/W-0	R/W-0	R/W-0	R/W-0
—	—	RP44R5	RP44R4	RP44R3	RP44R2	RP44R1	RP44R0
bit 7							bit 0

Legend:			
R = Readable bit	W = Writable bit	U = Unimplemented bit, read as ‘0’	
-n = Value at POR	‘1’ = Bit is set	‘0’ = Bit is cleared	x = Bit is unknown

bit 15-14 **Unimplemented:** Read as ‘0’

bit 13-8 **RP45R<5:0>:** Peripheral Output Function is Assigned to S1RP45 Output Pin bits (see Table 4-31 for peripheral function numbers)

bit 7-6 **Unimplemented:** Read as ‘0’

bit 5-0 **RP44R<5:0>:** Peripheral Output Function is Assigned to S1RP44 Output Pin bits (see Table 4-31 for peripheral function numbers)

REGISTER 4-67: RPOR7: PERIPHERAL PIN SELECT OUTPUT REGISTER 7

U-0	U-0	R/W-0	R/W-0	R/W-0	R/W-0	R/W-0	R/W-0
—	—	RP47R5	RP47R4	RP47R3	RP47R2	RP47R1	RP47R0
bit 15							bit 8

U-0	U-0	R/W-0	R/W-0	R/W-0	R/W-0	R/W-0	R/W-0
—	—	RP46R5	RP46R4	RP46R3	RP46R2	RP46R1	RP46R0
bit 7							bit 0

Legend:			
R = Readable bit	W = Writable bit	U = Unimplemented bit, read as ‘0’	
-n = Value at POR	‘1’ = Bit is set	‘0’ = Bit is cleared	x = Bit is unknown

bit 15-14 **Unimplemented:** Read as ‘0’

bit 13-8 **RP47R<5:0>:** Peripheral Output Function is Assigned to S1RP47 Output Pin bits (see Table 4-31 for peripheral function numbers)

bit 7-6 **Unimplemented:** Read as ‘0’

bit 5-0 **RP46R<5:0>:** Peripheral Output Function is Assigned to S1RP46 Output Pin bits (see Table 4-31 for peripheral function numbers)

REGISTER 4-68: RPOR8: PERIPHERAL PIN SELECT OUTPUT REGISTER 8

U-0	U-0	R/W-0	R/W-0	R/W-0	R/W-0	R/W-0	R/W-0
—	—	RP49R5	RP49R4	RP49R3	RP49R2	RP49R1	RP49R0
bit 15							bit 8

U-0	U-0	R/W-0	R/W-0	R/W-0	R/W-0	R/W-0	R/W-0
—	—	RP48R5	RP48R4	RP48R3	RP48R2	RP48R1	RP48R0
bit 7							bit 0

Legend:			
R = Readable bit	W = Writable bit	U = Unimplemented bit, read as ‘0’	
-n = Value at POR	‘1’ = Bit is set	‘0’ = Bit is cleared	x = Bit is unknown

bit 15-14 **Unimplemented:** Read as ‘0’

bit 13-8 **RP49R<5:0>:** Peripheral Output Function is Assigned to S1RP49 Output Pin bits (see Table 4-31 for peripheral function numbers)

bit 7-6 **Unimplemented:** Read as ‘0’

bit 5-0 **RP48R<5:0>:** Peripheral Output Function is Assigned to S1RP48 Output Pin bits (see Table 4-31 for peripheral function numbers)

REGISTER 4-69: RPOR9: PERIPHERAL PIN SELECT OUTPUT REGISTER 9

U-0	U-0	R/W-0	R/W-0	R/W-0	R/W-0	R/W-0	R/W-0
—	—	RP51R5	RP51R4	RP51R3	RP51R2	RP51R1	RP51R0
bit 15							bit 8

U-0	U-0	R/W-0	R/W-0	R/W-0	R/W-0	R/W-0	R/W-0
—	—	RP50R5	RP50R4	RP50R3	RP50R2	RP50R1	RP50R0
bit 7							bit 0

Legend:			
R = Readable bit	W = Writable bit	U = Unimplemented bit, read as ‘0’	
-n = Value at POR	‘1’ = Bit is set	‘0’ = Bit is cleared	x = Bit is unknown

bit 15-14 **Unimplemented:** Read as ‘0’

bit 13-8 **RP51R<5:0>:** Peripheral Output Function is Assigned to S1RP51 Output Pin bits (see Table 4-31 for peripheral function numbers)

bit 7-6 **Unimplemented:** Read as ‘0’

bit 5-0 **RP50R<5:0>:** Peripheral Output Function is Assigned to S1RP50 Output Pin bits (see Table 4-31 for peripheral function numbers)

© 2017-2018 Microchip Technology Inc.

REGISTER 4-70: RPOR10: PERIPHERAL PIN SELECT OUTPUT REGISTER 10

U-0	U-0	R/W-0	R/W-0	R/W-0	R/W-0	R/W-0	R/W-0
—	—	RP53R5	RP53R4	RP53R3	RP53R2	RP53R1	RP53R0
bit 15							bit 8

U-0	U-0	R/W-0	R/W-0	R/W-0	R/W-0	R/W-0	R/W-0
—	—	RP52R5	RP52R4	RP52R3	RP52R2	RP52R1	RP52R0
bit 7							bit 0

Legend:			
R = Readable bit	W = Writable bit	U = Unimplemented bit, read as ‘0’	
-n = Value at POR	‘1’ = Bit is set	‘0’ = Bit is cleared	x = Bit is unknown

bit 15-14 **Unimplemented:** Read as ‘0’

bit 13-8 **RP53R<5:0>:** Peripheral Output Function is Assigned to S1RP53 Output Pin bits (see Table 4-31 for peripheral function numbers)

bit 7-6 **Unimplemented:** Read as ‘0’

bit 5-0 **RP52R<5:0>:** Peripheral Output Function is Assigned to S1RP52 Output Pin bits (see Table 4-31 for peripheral function numbers)

REGISTER 4-71: RPOR11: PERIPHERAL PIN SELECT OUTPUT REGISTER 11

U-0	U-0	R/W-0	R/W-0	R/W-0	R/W-0	R/W-0	R/W-0
—	—	RP55R5	RP55R4	RP55R3	RP55R2	RP55R1	RP55R0
bit 15							bit 8

U-0	U-0	R/W-0	R/W-0	R/W-0	R/W-0	R/W-0	R/W-0
—	—	RP54R5	RP54R4	RP54R3	RP54R2	RP54R1	RP54R0
bit 7							bit 0

Legend:			
R = Readable bit	W = Writable bit	U = Unimplemented bit, read as ‘0’	
-n = Value at POR	‘1’ = Bit is set	‘0’ = Bit is cleared	x = Bit is unknown

bit 15-14 **Unimplemented:** Read as ‘0’

bit 13-8 **RP55R<5:0>:** Peripheral Output Function is Assigned to S1RP55 Output Pin bits (see Table 4-31 for peripheral function numbers)

bit 7-6 **Unimplemented:** Read as ‘0’

bit 5-0 **RP54R<5:0>:** Peripheral Output Function is Assigned to S1RP54 Output Pin bits (see Table 4-31 for peripheral function numbers)

REGISTER 4-72: RPOR12: PERIPHERAL PIN SELECT OUTPUT REGISTER 12

U-0	U-0	R/W-0	R/W-0	R/W-0	R/W-0	R/W-0	R/W-0
—	—	RP57R5	RP57R4	RP57R3	RP57R2	RP57R1	RP57R0
bit 15							bit 8

U-0	U-0	R/W-0	R/W-0	R/W-0	R/W-0	R/W-0	R/W-0
—	—	RP56R5	RP56R4	RP56R3	RP56R2	RP56R1	RP56R0
bit 7							bit 0

Legend:			
R = Readable bit	W = Writable bit	U = Unimplemented bit, read as ‘0’	
-n = Value at POR	‘1’ = Bit is set	‘0’ = Bit is cleared	x = Bit is unknown

bit 15-14 **Unimplemented:** Read as ‘0’

bit 13-8 **RP57R<5:0>:** Peripheral Output Function is Assigned to S1RP57 Output Pin bits (see Table 4-31 for peripheral function numbers)

bit 7-6 **Unimplemented:** Read as ‘0’

bit 5-0 **RP56R<5:0>:** Peripheral Output Function is Assigned to S1RP56 Output Pin bits (see Table 4-31 for peripheral function numbers)

REGISTER 4-73: RPOR13: PERIPHERAL PIN SELECT OUTPUT REGISTER 13

U-0	U-0	R/W-0	R/W-0	R/W-0	R/W-0	R/W-0	R/W-0
—	—	RP59R5	RP59R4	RP59R3	RP59R2	RP59R1	RP59R0
bit 15							bit 8

U-0	U-0	R/W-0	R/W-0	R/W-0	R/W-0	R/W-0	R/W-0
—	—	RP58R5	RP58R4	RP58R3	RP58R2	RP58R1	RP58R0
bit 7							bit 0

Legend:			
R = Readable bit	W = Writable bit	U = Unimplemented bit, read as ‘0’	
-n = Value at POR	‘1’ = Bit is set	‘0’ = Bit is cleared	x = Bit is unknown

bit 15-14 **Unimplemented:** Read as ‘0’

bit 13-8 **RP59R<5:0>:** Peripheral Output Function is Assigned to S1RP59 Output Pin bits (see Table 4-31 for peripheral function numbers)

bit 7-6 **Unimplemented:** Read as ‘0’

bit 5-0 **RP58R<5:0>:** Peripheral Output Function is Assigned to S1RP58 Output Pin bits (see Table 4-31 for peripheral function numbers)

© 2017-2018 Microchip Technology Inc.

REGISTER 4-74: RPOR14: PERIPHERAL PIN SELECT OUTPUT REGISTER 14

U-0	U-0	R/W-0	R/W-0	R/W-0	R/W-0	R/W-0	R/W-0
—	—	RP61R5	RP61R4	RP61R3	RP61R2	RP61R1	RP61R0
bit 15							bit 8

U-0	U-0	R/W-0	R/W-0	R/W-0	R/W-0	R/W-0	R/W-0
—	—	RP60R5	RP60R4	RP60R3	RP60R2	RP60R1	RP60R0
bit 7							bit 0

Legend:			
R = Readable bit	W = Writable bit	U = Unimplemented bit, read as ‘0’	
-n = Value at POR	‘1’ = Bit is set	‘0’ = Bit is cleared	x = Bit is unknown

bit 15-14 **Unimplemented:** Read as ‘0’

bit 13-8 **RP61R<5:0>:** Peripheral Output Function is Assigned to S1RP61 Output Pin bits (see Table 4-31 for peripheral function numbers)

bit 7-6 **Unimplemented:** Read as ‘0’

bit 5-0 **RP60R<5:0>:** Peripheral Output Function is Assigned to S1RP60 Output Pin bits (see Table 4-31 for peripheral function numbers)

REGISTER 4-75: RPOR15: PERIPHERAL PIN SELECT OUTPUT REGISTER 15

U-0	U-0	R/W-0	R/W-0	R/W-0	R/W-0	R/W-0	R/W-0
—	—	RP63R5	RP63R4	RP63R3	RP63R2	RP63R1	RP63R0
bit 15							bit 8

U-0	U-0	R/W-0	R/W-0	R/W-0	R/W-0	R/W-0	R/W-0
—	—	RP62R5	RP62R4	RP62R3	RP62R2	RP62R1	RP62R0
bit 7							bit 0

Legend:			
R = Readable bit	W = Writable bit	U = Unimplemented bit, read as ‘0’	
-n = Value at POR	‘1’ = Bit is set	‘0’ = Bit is cleared	x = Bit is unknown

bit 15-14 **Unimplemented:** Read as ‘0’

bit 13-8 **RP63R<5:0>:** Peripheral Output Function is Assigned to S1RP63 Output Pin bits (see Table 4-31 for peripheral function numbers)

bit 7-6 **Unimplemented:** Read as ‘0’

bit 5-0 **RP62R<5:0>:** Peripheral Output Function is Assigned to S1RP62 Output Pin bits (see Table 4-31 for peripheral function numbers)

REGISTER 4-76: RPOR16: PERIPHERAL PIN SELECT OUTPUT REGISTER 16

U-0	U-0	R/W-0	R/W-0	R/W-0	R/W-0	R/W-0	R/W-0
—	—	RP65R5	RP65R4	RP65R3	RP65R2	RP65R1	RP65R0
bit 15							bit 8

U-0	U-0	R/W-0	R/W-0	R/W-0	R/W-0	R/W-0	R/W-0
—	—	RP64R5	RP64R4	RP64R3	RP64R2	RP64R1	RP64R0
bit 7							bit 0

Legend:			
R = Readable bit	W = Writable bit	U = Unimplemented bit, read as ‘0’	
-n = Value at POR	‘1’ = Bit is set	‘0’ = Bit is cleared	x = Bit is unknown

bit 15-14 **Unimplemented:** Read as ‘0’

bit 13-8 **RP65R<5:0>:** Peripheral Output Function is Assigned to S1RP65 Output Pin bits (see Table 4-31 for peripheral function numbers)

bit 7-6 **Unimplemented:** Read as ‘0’

bit 5-0 **RP64R<5:0>:** Peripheral Output Function is Assigned to S1RP64 Output Pin bits (see Table 4-31 for peripheral function numbers)

REGISTER 4-77: RPOR17: PERIPHERAL PIN SELECT OUTPUT REGISTER 17

U-0	U-0	R/W-0	R/W-0	R/W-0	R/W-0	R/W-0	R/W-0
—	—	RP67R5	RP67R4	RP67R3	RP67R2	RP67R1	RP67R0
bit 15							bit 8

U-0	U-0	R/W-0	R/W-0	R/W-0	R/W-0	R/W-0	R/W-0
—	—	RP66R5	RP66R4	RP66R3	RP66R2	RP66R1	RP66R0
bit 7							bit 0

Legend:			
R = Readable bit	W = Writable bit	U = Unimplemented bit, read as ‘0’	
-n = Value at POR	‘1’ = Bit is set	‘0’ = Bit is cleared	x = Bit is unknown

bit 15-14 **Unimplemented:** Read as ‘0’

bit 13-8 **RP67R<5:0>:** Peripheral Output Function is Assigned to S1RP67 Output Pin bits (see Table 4-31 for peripheral function numbers)

bit 7-6 **Unimplemented:** Read as ‘0’

bit 5-0 **RP66R<5:0>:** Peripheral Output Function is Assigned to S1RP66 Output Pin bits (see Table 4-31 for peripheral function numbers)

© 2017-2018 Microchip Technology Inc.

REGISTER 4-78: RPOR18: PERIPHERAL PIN SELECT OUTPUT REGISTER 18

U-0	U-0	R/W-0	R/W-0	R/W-0	R/W-0	R/W-0	R/W-0
—	—	RP69R5	RP69R4	RP69R3	RP69R2	RP69R1	RP69R0
bit 15							bit 8

U-0	U-0	R/W-0	R/W-0	R/W-0	R/W-0	R/W-0	R/W-0
—	—	RP68R5	RP68R4	RP68R3	RP68R2	RP68R1	RP68R0
bit 7							bit 0

Legend:			
R = Readable bit	W = Writable bit	U = Unimplemented bit, read as ‘0’	
-n = Value at POR	‘1’ = Bit is set	‘0’ = Bit is cleared	x = Bit is unknown

bit 15-14 **Unimplemented:** Read as ‘0’

bit 13-8 **RP69R<5:0>:** Peripheral Output Function is Assigned to S1RP69 Output Pin bits (see Table 4-31 for peripheral function numbers)

bit 7-6 **Unimplemented:** Read as ‘0’

bit 5-0 **RP68R<5:0>:** Peripheral Output Function is Assigned to S1RP68 Output Pin bits (see Table 4-31 for peripheral function numbers)

REGISTER 4-79: RPOR19: PERIPHERAL PIN SELECT OUTPUT REGISTER 19

U-0	U-0	R/W-0	R/W-0	R/W-0	R/W-0	R/W-0	R/W-0
—	—	RP71R5	RP71R4	RP71R3	RP71R2	RP71R1	RP71R0
bit 15							bit 8

U-0	U-0	R/W-0	R/W-0	R/W-0	R/W-0	R/W-0	R/W-0
—	—	RP70R5	RP70R4	RP70R3	RP70R2	RP70R1	RP70R0
bit 7							bit 0

Legend:			
R = Readable bit	W = Writable bit	U = Unimplemented bit, read as ‘0’	
-n = Value at POR	‘1’ = Bit is set	‘0’ = Bit is cleared	x = Bit is unknown

bit 15-14 **Unimplemented:** Read as ‘0’

bit 13-8 **RP71R<5:0>:** Peripheral Output Function is Assigned to S1RP71 Output Pin bits (see Table 4-31 for peripheral function numbers)

bit 7-6 **Unimplemented:** Read as ‘0’

bit 5-0 **RP70R<5:0>:** Peripheral Output Function is Assigned to S1RP70 Output Pin bits (see Table 4-31 for peripheral function numbers)

REGISTER 4-80: RPOR20: PERIPHERAL PIN SELECT OUTPUT REGISTER 20

U-0	U-0	R/W-0	R/W-0	R/W-0	R/W-0	R/W-0	R/W-0
—	—	RP171R5(1)	RP171R4(1)	RP171R3(1)	RP171R2(1)	RP171R1(1)	RP171R0(1)
bit 15							bit 8

U-0	U-0	R/W-0	R/W-0	R/W-0	R/W-0	R/W-0	R/W-0
—	—	RP170R5(1)	RP170R4(1)	RP170R3(1)	RP170R2(1)	RP170R1(1)	RP170R0(1)
bit 7							bit 0

Legend:			
R = Readable bit	W = Writable bit	U = Unimplemented bit, read as ‘0’	
-n = Value at POR	‘1’ = Bit is set	‘0’ = Bit is cleared	x = Bit is unknown

bit 15-14 **Unimplemented:** Read as ‘0’

bit 13-8 **RP171R<5:0>:** Peripheral Output Function is Assigned to S1RP171 Output Pin bits(1) (see Table 4-31 for peripheral function numbers)

bit 7-6 **Unimplemented:** Read as ‘0’

bit 5-0 **RP170R<5:0>:** Peripheral Output Function is Assigned to S1RP170 Output Pin bits(1) (see Table 4-31 for peripheral function numbers)

Note 1: These are virtual output ports.

REGISTER 4-81: RPOR21: PERIPHERAL PIN SELECT OUTPUT REGISTER 21

U-0	U-0	R/W-0	R/W-0	R/W-0	R/W-0	R/W-0	R/W-0
—	—	RP173R5(1)	RP173R4(1)	RP173R3(1)	RP173R2(1)	RP173R1(1)	RP173R0(1)
bit 15							bit 8

U-0	U-0	R/W-0	R/W-0	R/W-0	R/W-0	R/W-0	R/W-0
—	—	RP172R5(1)	RP172R4(1)	RP172R3(1)	RP172R2(1)	RP172R1(1)	RP172R0(1)
bit 7							bit 0

Legend:			
R = Readable bit	W = Writable bit	U = Unimplemented bit, read as ‘0’	
-n = Value at POR	‘1’ = Bit is set	‘0’ = Bit is cleared	x = Bit is unknown

bit 15-14 **Unimplemented:** Read as ‘0’

bit 13-8 **RP173R<5:0>:** Peripheral Output Function is Assigned to S1RP173 Output Pin bits(1) (see Table 4-31 for peripheral function numbers)

bit 7-6 **Unimplemented:** Read as ‘0’

bit 5-0 **RP172R<5:0>:** Peripheral Output Function is Assigned to S1RP172 Output Pin bits(1) (see Table 4-31 for peripheral function numbers)

Note 1: These are virtual output ports.

© 2017-2018 Microchip Technology Inc.

REGISTER 4-82: RPOR22: PERIPHERAL PIN SELECT OUTPUT REGISTER 22

U-0	U-0	R/W-0	R/W-0	R/W-0	R/W-0	R/W-0	R/W-0
—	—	RP175R5(1)	RP175R4(1)	RP175R3(1)	RP175R2(1)	RP175R1(1)	RP175R0(1)
bit 15							bit 8

U-0	U-0	R/W-0	R/W-0	R/W-0	R/W-0	R/W-0	R/W-0
—	—	RP174R5(1)	RP174R4(1)	RP174R3(1)	RP174R2(1)	RP174R1(1)	RP174R0(1)
bit 7							bit 0

Legend:			
R = Readable bit	W = Writable bit	U = Unimplemented bit, read as ‘0’	
-n = Value at POR	‘1’ = Bit is set	‘0’ = Bit is cleared	x = Bit is unknown

bit 15-14 **Unimplemented:** Read as ‘0’

bit 13-8 **RP175R<5:0>:** Peripheral Output Function is Assigned to S1RP175 Output Pin bits(1) (see Table 4-31 for peripheral function numbers)

bit 7-6 **Unimplemented:** Read as ‘0’

bit 5-0 **RP174R<5:0>:** Peripheral Output Function is Assigned to S1RP174 Output Pin bits(1) (see Table 4-31 for peripheral function numbers)

Note 1: These are virtual output ports.

TABLE 4-33: PORTA REGISTER SUMMARY

Register	Bit 15	Bit 14	Bit 13	Bit 12	Bit 11	Bit 10	Bit 9	Bit 8	Bit 7	Bit 6	Bit 5	Bit 4	Bit 3	Bit 2	Bit 1	Bit 0
ANSELA	—	—	—	—	—	—	—	—	—	—	—	ANSELA<3:1>				—
TRISA	—	—	—	—	—	—	—	—	—	—	—	TRISA<4:0>				
PORTA	—	—	—	—	—	—	—	—	—	—	—	RA<4:0>				
LATA	—	—	—	—	—	—	—	—	—	—	—	LATA<4:0>				
ODCA	—	—	—	—	—	—	—	—	—	—	—	ODCA<4:0>				
CNPUA	—	—	—	—	—	—	—	—	—	—	—	CNPUA<4:0>				
CNPDA	—	—	—	—	—	—	—	—	—	—	—	CNPDA<4:0>				
CNCONA	ON	—	—	—	CNSTYLE	—	—	—	—	—	—	—	—	—	—	—
CNEN0A	—	—	—	—	—	—	—	—	—	—	—	CNEN0A<4:0>				
CNSTATA	—	—	—	—	—	—	—	—	—	—	—	CNSTATA<4:0>				
CNEN1A	—	—	—	—	—	—	—	—	—	—	—	CNEN1A<4:0>				
CNFA	—	—	—	—	—	—	—	—	—	—	—	CNFA<4:0>				

TABLE 4-34: PORTB REGISTER SUMMARY

Register	Bit 15	Bit 14	Bit 13	Bit 12	Bit 11	Bit 10	Bit 9	Bit 8	Bit 7	Bit 6	Bit 5	Bit 4	Bit 3	Bit 2	Bit 1	Bit 0
ANSELB	—	—	—	—	—	—	—	ANSELB<8:7>		—	—	ANSELB<4:0>				
TRISB	TRISB<15:0>															
PORTB	RB<15:0>															
LATB	LATB<15:0>															
ODCB	ODCB<15:0>															
CNPUB	CNPUB<15:0>															
CNPDB	CNPDB<15:0>															
CNCONB	ON	—	—	—	CNSTYLE	—	—	—	—	—	—	—	—	—	—	—
CNEN0B	CNEN0B<15:0>															
CNSTATB	CNSTATB<15:0>															
CNEN1B	CNEN1B<15:0>															
CNFB	CNFB<15:0>															

© 2017-2018 Microchip Technology Inc.

TABLE 4-35: PORTC REGISTER SUMMARY

Register	Bit 15	Bit 14	Bit 13	Bit 12	Bit 11	Bit 10	Bit 9	Bit 8	Bit 7	Bit 6	Bit 5	Bit 4	Bit 3	Bit 2	Bit 1	Bit 0
ANSELC	—	—	—	—	—	—	—	—	ANSELC<7:6>		—	—	ANSELC<3:0>			
TRISC	TRISC<15:0>															
PORTC	RC<15:0>															
LATC	LATC<15:0>															
ODCC	ODCC<15:0>															
CNPUC	CNPUC<15:0>															
CNPDC	CNPDC<15:0>															
CNCONC	ON	—	—	—	CNSTYLE	—	—	—	—	—	—	—	—	—	—	—
CNEN0C	CNEN0C<15:0>															
CNSTATC	CNSTATC<15:0>															
CNEN1C	CNEN1C<15:0>															
CNFC	CNFC<15:0>															

TABLE 4-36: PORTD REGISTER SUMMARY

Register	Bit 15	Bit 14	Bit 13	Bit 12	Bit 11	Bit 10	Bit 9	Bit 8	Bit 7	Bit 6	Bit 5	Bit 4	Bit 3	Bit 2	Bit 1	Bit 0
ANSELD	—	ANSELD<14:10>					—	—	—	—	—	—	—	—	—	—
TRISD	TRISD<15:0>															
PORTD	RD<15:0>															
LATD	LATD<15:0>															
ODCD	ODCD<15:0>															
CNPUD	CNPUD<15:0>															
CNPDD	CNPDD<15:0>															
CNCOND	ON	—	—	—	CNSTYLE	—	—	—	—	—	—	—	—	—	—	—
CNEN0D	CNEN0D<15:0>															
CNSTATD	CNSTATD<15:0>															
CNEN1D	CNEN1D<15:0>															
CNFD	CNFD<15:0>															

© 2017-2018 Microchip Technology Inc.

TABLE 4-37: PORTE REGISTER SUMMARY

Register	Bit 15	Bit 14	Bit 13	Bit 12	Bit 11	Bit 10	Bit 9	Bit 8	Bit 7	Bit 6	Bit 5	Bit 4	Bit 3	Bit 2	Bit 1	Bit 0
ANSLE	—	—	—	—	—	—	—	—	—	ANSELE6	—	—	—	—	—	—
TRISE	TRISE<15:0>															
PORTE	RE<15:0>															
LATE	LATE<15:0>															
ODCE	ODCE<15:0>															
CNPUE	CNPUE<15:0>															
CNPDE	CNPDE<15:0>															
CNCONE	ON	—	—	—	CNSTYLE	—	—	—	—	—	—	—	—	—	—	—
CNEN0E	CNEN0E<15:0>															
CNSTATE	CNSTATE<15:0>															
CNEN1E	CNEN1E<15:0>															
CNFE	CNFE<15:0>															

© 2017-2018 Microchip Technology Inc.

4.7 High-Speed, 12-Bit Analog-to-Digital Converter (Slave ADC)

Note 1: This data sheet summarizes the features of the dsPIC33CH128MP508 family of devices. It is not intended to be a comprehensive reference source. To complement the information in this data sheet, refer to **"12-Bit High-Speed, Multiple SARs A/D Converter (ADC)**" (DS70005213) in the *"dsPIC33/PIC24 Family Reference Manual"*, which is available from the Microchip web site (www.microchip.com).

2: This section describes the Slave ADC.

dsPIC33CH128MP508S1 devices have a high-speed, 12-bit Analog-to-Digital Converter (ADC) that features a low conversion latency, high resolution and over-sampling capabilities to improve performance in AC/DC, DC/DC power converters. The Slave implements the ADC with three SAR cores, two dedicated and one shared.

4.7.1 SLAVE ADC FEATURES OVERVIEW

The High-Speed, 12-Bit Multiple SARs Analog-to-Digital Converter (ADC) includes the following features:

- Three ADC Cores: Two Dedicated Cores and One Shared (common) Core
- User-Configurable Resolution of up to 12 Bits for each Core
- Up to 3.5 Msps Conversion Rate per Channel at 12-Bit Resolution
- Low-Latency Conversion
- Up to 20 Analog Input Channels, with a Separate 16-Bit Conversion Result Register for each Input
- Conversion Result can be Formatted as Unsigned or Signed Data, on a per Channel Basis, for All Channels
- Simultaneous Sampling of up to Three Analog Inputs
- Channel Scan Capability
- Multiple Conversion Trigger Options for each Core, including:
  - PWM triggers from Master and Slave CPU cores
  - SCCP modules triggers
  - CLC modules triggers
  - External pin trigger event (ADTRG31)
  - Software trigger
- Four Integrated Digital Comparators with Dedicated Interrupts:
  - Multiple comparison options
  - Assignable to specific analog inputs
- Four Oversampling Filters with Dedicated Interrupts:
  - Provide increased resolution
  - Assignable to a specific analog input
- CVD Hardware for Capacitive Touch and Capacitance Measurement Applications

The module consists of three independent SAR ADC cores. Simplified block diagrams of the Multiple SARs 12-Bit ADC are shown in Figure 4-20 and Figure 4-21.

The analog inputs (channels) are connected through multiplexers and switches to the Sample-and-Hold (S&H) circuit of each ADC core. The core uses the channel information (the output format, the Measurement mode and the input number) to process the analog sample. When conversion is complete, the result is stored in the result buffer for the specific analog input, and passed to the digital filter and digital comparator if they were configured to use data from this particular channel.

The ADC module can sample up to three inputs at a time (two inputs from the dedicated SAR cores and one from the shared SAR core). If multiple ADC inputs request conversion on the shared core, the module will convert them in a sequential manner, starting with the lowest order input.

The ADC provides each analog input the ability to specify its own trigger source. This capability allows the ADC to sample and convert analog inputs that are associated with PWM generators operating on independent time bases.

FIGURE 4-20: ADC MODULE BLOCK DIAGRAM

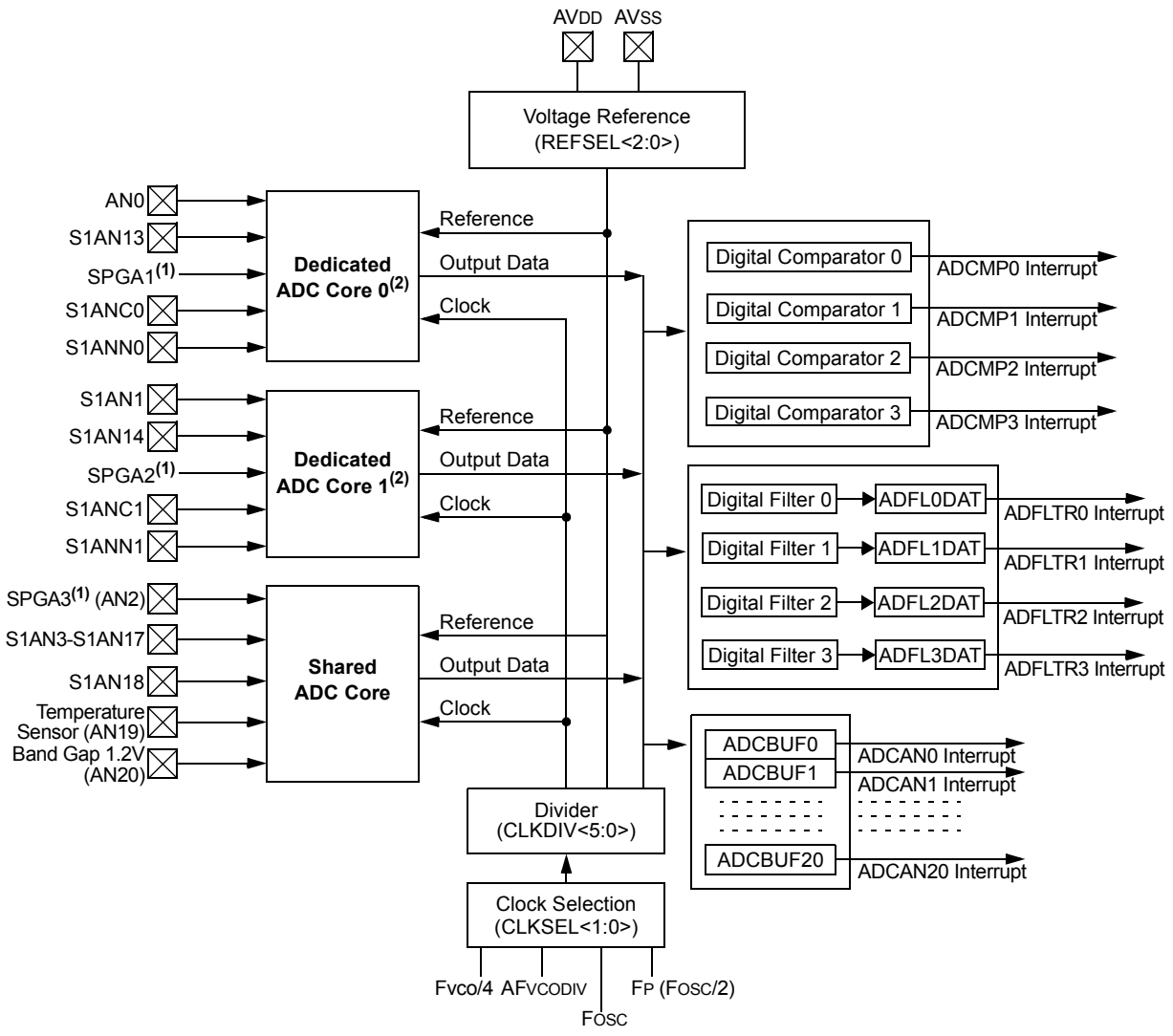

Note 1: SPGA1, SPGA2, SPGA3 and Band Gap Reference (V_{BG}) are internal analog inputs and are not available on device pins.

2: If the dedicated core uses an alternate channel, then shared core function cannot be used.

© 2017-2018 Microchip Technology Inc.

FIGURE 4-21: ADC SHARED CORE BLOCK DIAGRAM

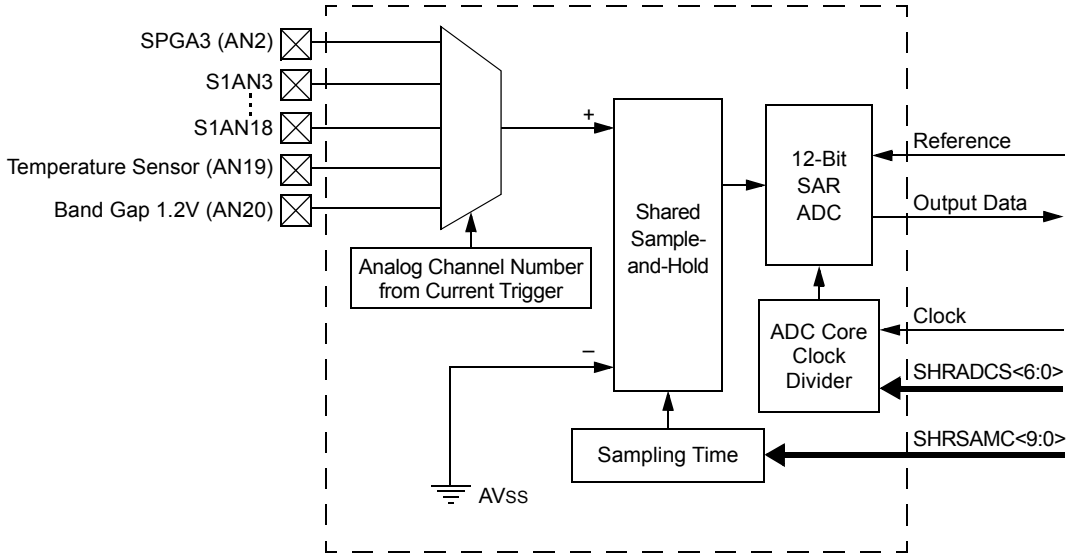

FIGURE 4-22: DEDICATED ADC CORE

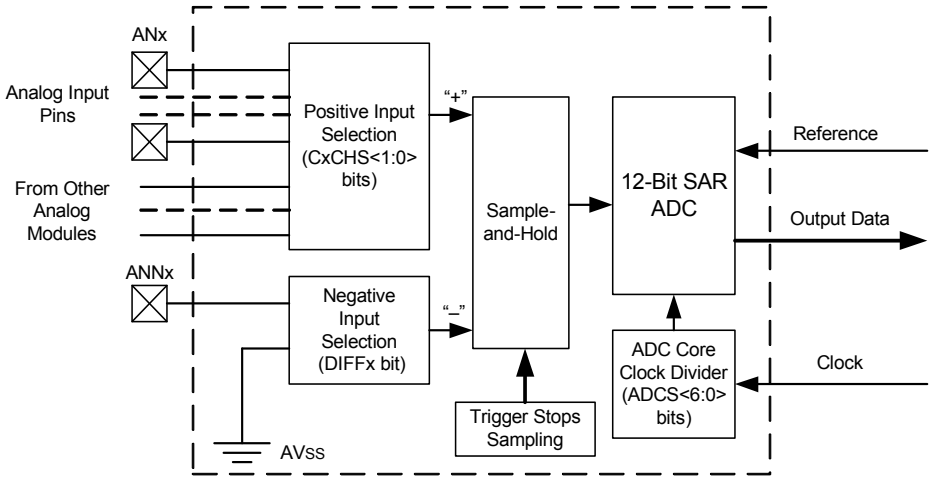

4.7.2 ANALOG-TO-DIGITAL CONVERTER RESOURCES

Many useful resources are provided on the main product page of the Microchip web site for the devices listed in this data sheet. This product page contains the latest updates and additional information.

4.7.2.1 Key Resources

- **"12-Bit High-Speed, Multiple SARs A/D Converter (ADC)**" (DS70005213) in the *"dsPIC33/PIC24 Family Reference Manual"*
- Code Samples
- Application Notes
- Software Libraries
- Webinars
- All Related *"dsPIC33/PIC24 Family Reference Manual"* Sections
- Development Tools

© 2017-2018 Microchip Technology Inc.

4.7.3 ADC CONTROL/STATUS REGISTERS

REGISTER 4-83: ADCON1L: ADC CONTROL REGISTER 1 LOW

R/W-0	U-0	R/W-0	U-0	r-0	U-0	U-0	U-0
ADON(1)	—	ADSIDL	—	r	—	—	—
bit 15							bit 8

U-0	U-0	U-0	U-0	U-0	U-0	U-0	U-0
—	—	—	—	—	—	—	—
bit 7							bit 0

Legend:	r = Reserved bit		
R = Readable bit	W = Writable bit	U = Unimplemented bit, read as ‘0’	
-n = Value at POR	‘1’ = Bit is set	‘0’ = Bit is cleared	x = Bit is unknown

bit 15 **ADON:** ADC Enable bit(1)
`1` = ADC module is enabled
`0` = ADC module is off

bit 14 **Unimplemented:** Read as ‘`0`’

bit 13 **ADSIDL:** ADC Stop in Idle Mode bit
`1` = Discontinues module operation when device enters Idle mode
`0` = Continues module operation in Idle mode

bit 12 **Unimplemented:** Read as ‘`0`’

bit 11 **Reserved:** Maintain as ‘`0`’

bit 10-0 **Unimplemented:** Read as ‘`0`’

Note 1: Set the ADON bit only after the ADC module has been configured. Changing ADC Configuration bits when ADON = `1` will result in unpredictable behavior.

REGISTER 4-84: ADCON1H: ADC CONTROL REGISTER 1 HIGH

U-0	U-0	U-0	U-0	U-0	U-0	U-0	U-0
—	—	—	—	—	—	—	—
bit 15							bit 8

R/W-0	R/W-1	R/W-1	U-0	U-0	U-0	U-0	U-0
FORM	SHRRES1	SHRRES0	—	—	—	—	—
bit 7							bit 0

Legend:			
R = Readable bit	W = Writable bit	U = Unimplemented bit, read as ‘0’	
-n = Value at POR	‘1’ = Bit is set	‘0’ = Bit is cleared	x = Bit is unknown

bit 15-8 **Unimplemented:** Read as ‘0’

bit 7 **FORM:** Fractional Data Output Format bit
1 = Fractional
0 = Integer

bit 6-5 **SHRRES<1:0>:** Shared ADC Core Resolution Selection bits
11 = 12-bit resolution
10 = 10-bit resolution
01 = 8-bit resolution
00 = 6-bit resolution

bit 4-0 **Unimplemented:** Read as ‘0’

© 2017-2018 Microchip Technology Inc.

REGISTER 4-85: ADCON2L: ADC CONTROL REGISTER 2 LOW

R/W-0	R/W-0	U-0	R/W-0	U-0	R/W-0	R/W-0	R/W-0
REFCIE	REFERCIE	—	EIEN	—	SHREISEL2(1)	SHREISEL1(1)	SHREISEL0(1)
bit 15							bit 8

U-0	R/W-0	R/W-0	R/W-0	R/W-0	R/W-0	R/W-0	R/W-0
—	SHRADCS6	SHRADCS5	SHRADCS4	SHRADCS3	SHRADCS2	SHRADCS1	SHRADCS0
bit 7							bit 0

Legend:			
R = Readable bit	W = Writable bit	U = Unimplemented bit, read as ‘0’	
-n = Value at POR	‘1’ = Bit is set	‘0’ = Bit is cleared	x = Bit is unknown

bit 15 **REFCIE:** Band Gap and Reference Voltage Ready Common Interrupt Enable bit
1 = Common interrupt will be generated when the band gap will become ready
0 = Common interrupt is disabled for the band gap ready event

bit 14 **REFERCIE:** Band Gap or Reference Voltage Error Common Interrupt Enable bit
1 = Common interrupt will be generated when a band gap or reference voltage error is detected
0 = Common interrupt is disabled for the band gap and reference voltage error event

bit 13 **Unimplemented:** Read as ‘0’

bit 12 **EIEN:** Early Interrupts Enable bit
1 = The early interrupt feature is enabled for the input channel interrupts (when the EISTATx flag is set)
0 = The individual interrupts are generated when conversion is done (when the ANxRDY flag is set)

bit 11 **Unimplemented:** Read as ‘0’

bit 10-8 **SHREISEL<2:0>:** Shared Core Early Interrupt Time Selection bits(1)
111 = Early interrupt is set and interrupt is generated 8 TADCORE clocks prior to when the data is ready
110 = Early interrupt is set and interrupt is generated 7 TADCORE clocks prior to when the data is ready
101 = Early interrupt is set and interrupt is generated 6 TADCORE clocks prior to when the data is ready
100 = Early interrupt is set and interrupt is generated 5 TADCORE clocks prior to when the data is ready
011 = Early interrupt is set and interrupt is generated 4 TADCORE clocks prior to when the data is ready
010 = Early interrupt is set and interrupt is generated 3 TADCORE clocks prior to when the data is ready
001 = Early interrupt is set and interrupt is generated 2 TADCORE clocks prior to when the data is ready
000 = Early interrupt is set and interrupt is generated 1 TADCORE clock prior to when the data is ready

bit 7 **Unimplemented:** Read as ‘0’

bit 6-0 **SHRADCS<6:0>:** Shared ADC Core Input Clock Divider bits
These bits determine the number of TCORESRC (Source Clock Periods) for one shared TADCORE (Core Clock Period).
1111111 = 254 Source Clock Periods
...
0000011 = 6 Source Clock Periods
0000010 = 4 Source Clock Periods
0000001 = 2 Source Clock Periods
0000000 = 2 Source Clock Periods

Note 1: For the 6-bit shared ADC core resolution (SHRRES<1:0> = 00), the SHREISEL<2:0> settings, from ‘100’ to ‘111’, are not valid and should not be used. For the 8-bit shared ADC core resolution (SHRRES<1:0> = 01), the SHREISEL<2:0> settings, ‘110’ and ‘111’, are not valid and should not be used.

REGISTER 4-86: ADCON2H: ADC CONTROL REGISTER 2 HIGH

HSC/R-0	HSC/R-0	U-0	r-0	r-0	r-0	R/W-0	R/W-0
REFRDY	REFERR	—	r	r	r	SHRSAMC9	SHRSAMC8
bit 15							bit 8

R/W-0	R/W-0	R/W-0	R/W-0	R/W-0	R/W-0	R/W-0	R/W-0
SHRSAMC7	SHRSAMC6	SHRSAMC5	SHRSAMC4	SHRSAMC3	SHRSAMC2	SHRSAMC1	SHRSAMC0
bit 7							bit 0

Legend:	r = Reserved bit	U = Unimplemented bit, read as ‘0’	
R = Readable bit	W = Writable bit	HSC = Hardware Settable/Clearable bit	
-n = Value at POR	‘1’ = Bit is set	‘0’ = Bit is cleared	x = Bit is unknown

bit 15 **REFRDY:** Band Gap and Reference Voltage Ready Flag bit
1 = Band gap is ready
0 = Band gap is not ready

bit 14 **REFERR:** Band Gap or Reference Voltage Error Flag bit
1 = Band gap was removed after the ADC module was enabled (ADON = 1)
0 = No band gap error was detected

bit 13 **Unimplemented:** Read as ‘0’

bit 12-10 **Reserved:** Maintain as ‘0’

bit 9-0 **SHRSAMC<9:0>:** Shared ADC Core Sample Time Selection bits
These bits specify the number of shared ADC Core Clock Periods (T_{ADCORE}) for the shared ADC core sample time.
1111111111 = 1025 T_{ADCORE}
...
0000000001 = 3 T_{ADCORE}
0000000000 = 2 T_{ADCORE}

© 2017-2018 Microchip Technology Inc.

REGISTER 4-87: ADCON3L: ADC CONTROL REGISTER 3 LOW

R/W-0	R/W-0	R/W-0	R/W-0	R/W-0	HSC/R-0	R/W-0	HSC/R-0
REFSEL2	REFSEL1	REFSEL0	SUSPEND	SUSPCIE	SUSPRDY	SHRSAMP	CNVRTCH
bit 15							bit 8

R/W-0	HSC/R-0	R/W-0	R/W-0	R/W-0	R/W-0	R/W-0	R/W-0
SWLCTRG	SWCTRG	CNVCHSEL5	CNVCHSEL4	CNVCHSEL3	CNVCHSEL2	CNVCHSEL1	CNVCHSEL0
bit 7							bit 0

Legend:	U = Unimplemented bit, read as ‘0’		
R = Readable bit	W = Writable bit	HSC = Hardware Settable/Clearable bit	
-n = Value at POR	‘1’ = Bit is set	‘0’ = Bit is cleared	x = Bit is unknown

bit 15-13 **REFSEL<2:0>:** ADC Reference Voltage Selection bits

Value	VREFH	VREFL
000	AVDD	AVSS

001-111 = **Unimplemented:** Do not use

bit 12 **SUSPEND:** All ADC Core Triggers Disable bit

1 = All new trigger events for all ADC cores are disabled
0 = All ADC cores can be triggered

bit 11 **SUSPCIE:** Suspend All ADC Cores Common Interrupt Enable bit

1 = Common interrupt will be generated when ADC core triggers are suspended (SUSPEND bit = 1) and all previous conversions are finished (SUSPRDY bit becomes set)
0 = Common interrupt is not generated for suspend ADC cores event

bit 10 **SUSPRDY:** All ADC Cores Suspended Flag bit

1 = All ADC cores are suspended (SUSPEND bit = 1) and have no conversions in progress
0 = ADC cores have previous conversions in progress

bit 9 **SHRSAMP:** Shared ADC Core Sampling Direct Control bit

This bit should be used with the individual channel conversion trigger controlled by the CNVRTCH bit. It connects an analog input, specified by the CNVCHSEL<5:0> bits, to the shared ADC core and allows extending the sampling time. This bit is not controlled by hardware and must be cleared before the conversion starts (setting CNVRTCH to ‘1’).

1 = Shared ADC core samples an analog input specified by the CNVCHSEL<5:0> bits
0 = Sampling is controlled by the shared ADC core hardware

bit 8 **CNVRTCH:** Software Individual Channel Conversion Trigger bit

1 = Single trigger is generated for an analog input specified by the CNVCHSEL<5:0> bits; when the bit is set, it is automatically cleared by hardware on the next instruction cycle
0 = Next individual channel conversion trigger can be generated

bit 7 **SWLCTRG:** Software Level-Sensitive Common Trigger bit

1 = Triggers are continuously generated for all channels with the software, level-sensitive common trigger selected as a source in the ADTRIGnL and ADTRIGnH registers
0 = No software, level-sensitive common triggers are generated

bit 6 **SWCTRG:** Software Common Trigger bit

1 = Single trigger is generated for all channels with the software; common trigger selected as a source in the ADTRIGnL and ADTRIGnH registers; when the bit is set, it is automatically cleared by hardware on the next instruction cycle
0 = Ready to generate the next software common trigger

bit 5-0 **CNVCHSEL <5:0>:** Channel Number Selection for Software Individual Channel Conversion Trigger bits

These bits define a channel to be converted when the CNVRTCH bit is set.

REGISTER 4-88: ADCON3H: ADC CONTROL REGISTER 3 HIGH

R/W-0	R/W-0	R/W-0	R/W-0	R/W-0	R/W-0	R/W-0	R/W-0
CLKSEL1	CLKSEL0	CLKDIV5	CLKDIV4	CLKDIV3	CLKDIV2	CLKDIV1	CLKDIV0
bit 15							bit 8

R/W-0	U-0	U-0	U-0	U-0	U-0	R/W-0	R/W-0
SHREN	—	—	—	—	—	C1EN	C0EN
bit 7							bit 0

Legend:			
R = Readable bit	W = Writable bit	U = Unimplemented bit, read as ‘0’	
-n = Value at POR	‘1’ = Bit is set	‘0’ = Bit is cleared	x = Bit is unknown

bit 15-14 **CLKSEL<1:0>:** ADC Module Clock Source Selection bits
`11` = $F_{VCO}/4$
`10` = AF_{VCODIV}
`01` = F_{OSC}
`00` = F_P ($F_{OSC}/2$)

bit 13-8 **CLKDIV<5:0>:** ADC Module Clock Source Divider bits
The divider forms a $T_{CORESRC}$ clock used by all ADC cores (shared and dedicated) from the T_{SRC} ADC module clock source selected by the CLKSEL<1:0> bits. Then, each ADC core individually divides the $T_{CORESRC}$ clock to get a core-specific T_{ADCORE} clock using the ADCS<6:0> bits in the ADCORExH register or the SHRADCS<6:0> bits in the ADCON2L register.
`111111` = 64 Source Clock Periods
`...`
`000011` = 4 Source Clock Periods
`000010` = 3 Source Clock Periods
`000001` = 2 Source Clock Periods
`000000` = 1 Source Clock Period

bit 7 **SHREN:** Shared ADC Core Enable bit
`1` = Shared ADC core is enabled
`0` = Shared ADC core is disabled

bit 6-2 **Unimplemented:** Read as ‘`0`’

bit 1 **C1EN:** Dedicated ADC Core 1 Enable bits
`1` = Dedicated ADC Core 1 is enabled
`0` = Dedicated ADC Core 1 is disabled

bit 0 **C0EN:** Dedicated ADC Core 0 Enable bits
`1` = Dedicated ADC Core 0 is enabled
`0` = Dedicated ADC Core 0 is disabled

© 2017-2018 Microchip Technology Inc.

REGISTER 4-89: ADCON4L: ADC CONTROL REGISTER 4 LOW

U-0	U-0	U-0	U-0	U-0	U-0	r-0	r-0
—	—	—	—	—	—	—	—
bit 15							bit 8

U-0	U-0	U-0	U-0	U-0	U-0	R/W-0	R/W-0
—	—	—	—	—	—	SAMC1EN	SAMC0EN
bit 7							bit 0

Legend:	r = Reserved bit		
R = Readable bit	W = Writable bit	U = Unimplemented bit, read as ‘0’	
-n = Value at POR	‘1’ = Bit is set	‘0’ = Bit is cleared	x = Bit is unknown

bit 15-10 **Unimplemented:** Read as ‘0’

bit 9-8 **Reserved:** Must be written as ‘0’

bit 7-2 **Unimplemented:** Read as ‘0’

bit 1 **SAMC1EN:** Dedicated ADC Core 1 Conversion Delay Enable bit

1 = After trigger, the conversion will be delayed and the ADC core will continue sampling during the time specified by the SAMC<9:0> bits in the ADCORE1L register

0 = After trigger, the sampling will be stopped immediately and the conversion will be started on the next core clock cycle

bit 0 **SAMC0EN:** Dedicated ADC Core 0 Conversion Delay Enable bit

1 = After trigger, the conversion will be delayed and the ADC core will continue sampling during the time specified by the SAMC<9:0> bits in the ADCORE0L register

0 = After trigger, the sampling will be stopped immediately and the conversion will be started on the next core clock cycle

REGISTER 4-90: ADCON4H: ADC CONTROL REGISTER 4 HIGH

U-0	U-0	U-0	U-0	U-0	U-0	U-0	U-0
—	—	—	—	—	—	—	—
bit 15							bit 8

U-0	U-0	U-0	U-0	R/W-0	R/W-0	R/W-0	R/W-0
—	—	—	—	C1CHS1	C1CHS0	C0CHS1	C0CHS0
bit 7							bit 0

Legend:			
R = Readable bit	W = Writable bit	U = Unimplemented bit, read as ‘0’	
-n = Value at POR	‘1’ = Bit is set	‘0’ = Bit is cleared	x = Bit is unknown

bit 15-4 **Unimplemented:** Read as ‘0’

bit 3-2 **C1CHS<1:0>:** Dedicated ADC Core 1 Input Channel Selection bits
11 = S1ANC1
10 = SPGA2
01 = S1ANA1
00 = S1AN1

bit 1-0 **C0CHS<1:0>:** Dedicated ADC Core 0 Input Channel Selection bits
11 = S1ANC0
10 = SPGA1
01 = S1ANA0
00 = S1AN0

© 2017-2018 Microchip Technology Inc.

REGISTER 4-91: ADCON5L: ADC CONTROL REGISTER 5 LOW

HSC/R-0	U-0	U-0	U-0	U-0	U-0	HSC/R-0	HSC/R-0
SHRRDY	—	—	—	—	—	C1RDY	C0RDY
bit 15							bit 8

R/W-0	U-0	U-0	U-0	U-0	U-0	R/W-0	R/W-0
SHRPWR	—	—	—	—	—	C1PWR	C0PWR
bit 7							bit 0

Legend:	U = Unimplemented bit, read as ‘0’		
R = Readable bit	W = Writable bit	HSC = Hardware Settable/Clearable bit	
-n = Value at POR	‘1’ = Bit is set	‘0’ = Bit is cleared	x = Bit is unknown

bit 15 **SHRRDY:** Shared ADC Core Ready Flag bit
1 = ADC core is powered and ready for operation
0 = ADC core is not ready for operation

bit 14-10 **Unimplemented:** Read as ‘0’

bit 9 **C1RDY:** Dedicated ADC Core 1 Ready Flag bit
1 = ADC Core 1 is powered and ready for operation
0 = ADC Core 1 is not ready for operation

bit 8 **C0RDY:** Dedicated ADC Core 0 Ready Flag bit
1 = ADC Core 0 is powered and ready for operation
0 = ADC Core 0 is not ready for operation

bit 7 **SHRPWR:** Shared ADC Core Power Enable bit
1 = ADC core is powered
0 = ADC core is off

bit 6-2 **Unimplemented:** Read as ‘0’

bit 1 **C1PWR:** Dedicated ADC Core 1 Power Enable bit
1 = ADC Core 1 is powered
0 = ADC Core 1 is off

bit 0 **C0PWR:** Dedicated ADC Core 0 Power Enable bit
1 = ADC Core 0 is powered
0 = ADC Core 0 is off

REGISTER 4-92: ADCON5H: ADC CONTROL REGISTER 5 HIGH

U-0	U-0	U-0	U-0	R/W-0	R/W-0	R/W-0	R/W-0
—	—	—	—	WARMTIME3	WARMTIME2	WARMTIME1	WARMTIME0
bit 15							bit 8

R/W-0	U-0	U-0	U-0	U-0	U-0	R/W-0	R/W-0
SHRCIE	—	—	—	—	—	C1CIE	C0CIE
bit 7							bit 0

Legend:			
R = Readable bit	W = Writable bit	U = Unimplemented bit, read as ‘0’	
-n = Value at POR	‘1’ = Bit is set	‘0’ = Bit is cleared	x = Bit is unknown

bit 15-12 **Unimplemented:** Read as ‘0’

bit 11-8 **WARMTIME<3:0>:** ADC Dedicated Core x Power-up Delay bits

These bits determine the power-up delay in the number of the Core Source Clock Periods ($T_{CORESRC}$) for all ADC cores.

1111 = 32768 Source Clock Periods
1110 = 16384 Source Clock Periods
1101 = 8192 Source Clock Periods
1100 = 4096 Source Clock Periods
1011 = 2048 Source Clock Periods
1010 = 1024 Source Clock Periods
1001 = 512 Source Clock Periods
1000 = 256 Source Clock Periods
0111 = 128 Source Clock Periods
0110 = 64 Source Clock Periods
0101 = 32 Source Clock Periods
0100 = 16 Source Clock Periods
00xx = 16 Source Clock Periods

bit 7 **SHRCIE:** Shared ADC Core Ready Common Interrupt Enable bit

1 = Common interrupt will be generated when ADC core is powered and ready for operation
0 = Common interrupt is disabled for an ADC core ready event

bit 6-2 **Unimplemented:** Read as ‘0’

bit 1 **C1CIE:** Dedicated ADC Core 1 Ready Common Interrupt Enable bit

1 = Common interrupt will be generated when ADC Core 1 is powered and ready for operation
0 = Common interrupt is disabled for an ADC Core 1 ready event

bit 0 **C0CIE:** Dedicated ADC Core 0 Ready Common Interrupt Enable bit

1 = Common interrupt will be generated when ADC Core 0 is powered and ready for operation
0 = Common interrupt is disabled for an ADC Core 0 ready event

© 2017-2018 Microchip Technology Inc.

REGISTER 4-93: ADCOREXL: DEDICATED ADC CORE x CONTROL REGISTER LOW (x = 0 TO 1)

U-0	U-0	U-0	U-0	U-0	U-0	R/W-0	R/W-0
—	—	—	—	—	—	SAMC<9:8>	
bit 15							bit 8

R/W-0	R/W-0	R/W-0	R/W-0	R/W-0	R/W-0	R/W-0	R/W-0
SAMC<7:0>							
bit 7							bit 0

Legend:			
R = Readable bit	W = Writable bit	U = Unimplemented bit, read as ‘0’	
-n = Value at POR	‘1’ = Bit is set	‘0’ = Bit is cleared	x = Bit is unknown

bit 15-10 **Unimplemented:** Read as ‘0’

bit 9-0 **SAMC<9:0>:** Dedicated ADC Core x Conversion Delay Selection bits

These bits determine the time between the trigger event and the start of conversion in the number of the Core Clock Periods (TADCORE). During this time, the ADC Core x still continues sampling. This feature is enabled by the SAMCxEN bits in the ADCON4L register.

1111111111 = 1025 TADCORE
...
0000000001 = 3 TADCORE
0000000000 = 2 TADCORE

REGISTER 4-94: ADCOREXH: DEDICATED ADC CORE x CONTROL REGISTER HIGH (x = 0 TO 1)

U-0	U-0	U-0	R/W-0	R/W-0	R/W-0	R/W-0	R/W-0
—	—	—	EISEL2	EISEL1	EISEL0	RES1	RES2
bit 15							bit 8

U-0	R/W-0	R/W-0	R/W-0	R/W-0	R/W-0	R/W-0	R/W-0
—	ADCS6	ADCS5	ADCS4	ADCS3	ADCS2	ADCS1	ADCS0
bit 7							bit 0

Legend:			
R = Readable bit	W = Writable bit	U = Unimplemented bit, read as ‘0’	
-n = Value at POR	‘1’ = Bit is set	‘0’ = Bit is cleared	x = Bit is unknown

bit 15-13 **Unimplemented:** Read as ‘0’

bit 12-10 **EISEL<2:0>:** ADC Core x Early Interrupt Time Selection bits

111 = Early interrupt is set and an interrupt is generated 8 TADCORE clocks prior to when the data is ready
110 = Early interrupt is set and an interrupt is generated 7 TADCORE clocks prior to when the data is ready
101 = Early interrupt is set and an interrupt is generated 6 TADCORE clocks prior to when the data is ready
100 = Early interrupt is set and an interrupt is generated 5 TADCORE clocks prior to when the data is ready
011 = Early interrupt is set and an interrupt is generated 4 TADCORE clocks prior to when the data is ready
010 = Early interrupt is set and an interrupt is generated 3 TADCORE clocks prior to when the data is ready
001 = Early interrupt is set and an interrupt is generated 2 TADCORE clocks prior to when the data is ready
000 = Early interrupt is set and an interrupt is generated 1 TADCORE clock prior to when the data is ready

bit 9-8 **RES<1:0>:** ADC Core x Resolution Selection bits

11 = 12-bit resolution
10 = 10-bit resolution
01 = 8-bit resolution(1)
00 = 6-bit resolution(1)

bit 7 **Unimplemented:** Read as ‘0’

bit 6-0 **ADCS<6:0>:** ADC Core x Input Clock Divider bits

These bits determine the number of Source Clock Periods (TCORESRC) for one Core Clock Period (TADCORE).
1111111 = 254 Source Clock Periods
...
0000011 = 6 Source Clock Periods
0000010 = 4 Source Clock Periods
0000001 = 2 Source Clock Periods
0000000 = 2 Source Clock Periods

Note 1: For the 6-bit ADC core resolution (RES<1:0> = 00), the EISEL<2:0> bits settings, from ‘100’ to ‘111’, are not valid and should not be used. For the 8-bit ADC core resolution (RES<1:0> = 01), the EISEL<2:0> bits settings, ‘110’ and ‘111’, are not valid and should not be used.

© 2017-2018 Microchip Technology Inc.

REGISTER 4-95: ADLVLTRGL: ADC LEVEL-SENSITIVE TRIGGER CONTROL REGISTER LOW

R/W-0	R/W-0	R/W-0	R/W-0	R/W-0	R/W-0	R/W-0	R/W-0
LVLEN<15:8>							
bit 15							bit 8

R/W-0	R/W-0	R/W-0	R/W-0	R/W-0	R/W-0	R/W-0	R/W-0
LVLEN<7:0>							
bit 7							bit 0

Legend:			
R = Readable bit	W = Writable bit	U = Unimplemented bit, read as ‘0’	
-n = Value at POR	‘1’ = Bit is set	‘0’ = Bit is cleared	x = Bit is unknown

bit 15-0 **LVLEN<15:0>:** Level Trigger for Corresponding Analog Input Enable bits
`1` = Input trigger is level-sensitive
`0` = Input trigger is edge-sensitive

REGISTER 4-96: ADLVLTRGH: ADC LEVEL-SENSITIVE TRIGGER CONTROL REGISTER HIGH

U-0	U-0	U-0	U-0	U-0	U-0	U-0	U-0
—	—	—	—	—	—	—	—
bit 15							bit 8

U-0	U-0	U-0	R/W-0	R/W-0	R/W-0	R/W-0	R/W-0
—	—	—	LVLEN<20:16>				
bit 7							bit 0

Legend:			
R = Readable bit	W = Writable bit	U = Unimplemented bit, read as ‘0’	
-n = Value at POR	‘1’ = Bit is set	‘0’ = Bit is cleared	x = Bit is unknown

bit 15-5 **Unimplemented:** Read as ‘`0`’
bit 4-0 **LVLEN<20:16>:** Level Trigger for Corresponding Analog Input Enable bits
`1` = Input trigger is level-sensitive
`0` = Input trigger is edge-sensitive

REGISTER 4-97: ADEIEL: ADC EARLY INTERRUPT ENABLE REGISTER LOW

R/W-0	R/W-0	R/W-0	R/W-0	R/W-0	R/W-0	R/W-0	R/W-0
EIEN<15:8>							
bit 15							bit 8

R/W-0	R/W-0	R/W-0	R/W-0	R/W-0	R/W-0	R/W-0	R/W-0
EIEN<7:0>							
bit 7							bit 0

Legend:			
R = Readable bit	W = Writable bit	U = Unimplemented bit, read as ‘0’	
-n = Value at POR	‘1’ = Bit is set	‘0’ = Bit is cleared	x = Bit is unknown

bit 15-0 **EIEN<15:0>:** Early Interrupt Enable for Corresponding Analog Inputs bits
`1` = Early interrupt is enabled for the channel
`0` = Early interrupt is disabled for the channel

REGISTER 4-98: ADEIEH: ADC EARLY INTERRUPT ENABLE REGISTER HIGH

U-0	U-0	U-0	U-0	U-0	U-0	U-0	U-0
—	—	—	—	—	—	—	—
bit 15							bit 8

U-0	U-0	U-0	R/W-0	R/W-0	R/W-0	R/W-0	R/W-0
—	—	—	EIEN<20:16>				
bit 7							bit 0

Legend:			
R = Readable bit	W = Writable bit	U = Unimplemented bit, read as ‘0’	
-n = Value at POR	‘1’ = Bit is set	‘0’ = Bit is cleared	x = Bit is unknown

bit 15-5 **Unimplemented:** Read as ‘`0`’
bit 4-0 **EIEN<20:16>:** Early Interrupt Enable for Corresponding Analog Inputs bits
`1` = Early interrupt is enabled for the channel
`0` = Early interrupt is disabled for the channel

© 2017-2018 Microchip Technology Inc.

REGISTER 4-99: ADEISTATL: ADC EARLY INTERRUPT STATUS REGISTER LOW

R/W-0	R/W-0	R/W-0	R/W-0	R/W-0	R/W-0	R/W-0	R/W-0
EISTAT<15:8>							
bit 15							bit 8

R/W-0	R/W-0	R/W-0	R/W-0	R/W-0	R/W-0	R/W-0	R/W-0
EISTAT<7:0>							
bit 7							bit 0

Legend:			
R = Readable bit	W = Writable bit	U = Unimplemented bit, read as ‘0’	
-n = Value at POR	‘1’ = Bit is set	‘0’ = Bit is cleared	x = Bit is unknown

bit 15-0 **EISTAT<15:0>:** Early Interrupt Status for Corresponding Analog Inputs bits
`1` = Early interrupt was generated
`0` = Early interrupt was not generated since the last ADCBUFx read

REGISTER 4-100: ADEISTATH: ADC EARLY INTERRUPT STATUS REGISTER HIGH

U-0	U-0	U-0	U-0	U-0	U-0	U-0	U-0
—	—	—	—	—	—	—	—
bit 15							bit 8

U-0	U-0	U-0	R/W-0	R/W-0	R/W-0	R/W-0	R/W-0
—	—	—	EISTAT<20:16>				
bit 7							bit 0

Legend:			
R = Readable bit	W = Writable bit	U = Unimplemented bit, read as ‘0’	
-n = Value at POR	‘1’ = Bit is set	‘0’ = Bit is cleared	x = Bit is unknown

bit 15-5 **Unimplemented:** Read as ‘`0`’
bit 4-0 **EISTAT<20:16>:** Early Interrupt Status for Corresponding Analog Inputs bits
`1` = Early interrupt was generated
`0` = Early interrupt was not generated since the last ADCBUFx read

REGISTER 4-101: ADMOD0L: ADC INPUT MODE CONTROL REGISTER 0 LOW

U-0	U-0	U-0	U-0	U-0	U-0	U-0	U-0
—	—	—	—	—	—	—	—
bit 15							bit 8

U-0	U-0	U-0	U-0	R/W-0	R/W-0	R/W-0	R/W-0
—	—	—	—	DIFF1	SIGN1	DIFF0	SIGN0
bit 7							bit 0

Legend:			
R = Readable bit	W = Writable bit	U = Unimplemented bit, read as ‘0’	
-n = Value at POR	‘1’ = Bit is set	‘0’ = Bit is cleared	x = Bit is unknown

bit 15-4 **Unimplemented:** Read as ‘0’

bit 3 and bit 1 (odd) **DIFF<1:0>:** Differential-Mode for Corresponding Analog Inputs bits
1 = Channel is differential
0 = Channel is single-ended

bit 2 and bit 0 (even) **SIGN<1:0>:** Output Data Sign for Corresponding Analog Inputs bits
1 = Channel output data is signed
0 = Channel output data is unsigned

© 2017-2018 Microchip Technology Inc.

REGISTER 4-102: ADIEL: ADC INTERRUPT ENABLE REGISTER LOW

R/W-0	R/W-0	R/W-0	R/W-0	R/W-0	R/W-0	R/W-0	R/W-0
IE<15:8>							
bit 15							bit 8

R/W-0	R/W-0	R/W-0	R/W-0	R/W-0	R/W-0	R/W-0	R/W-0
IE<7:0>							
bit 7							bit 0

Legend:			
R = Readable bit	W = Writable bit	U = Unimplemented bit, read as ‘0’	
-n = Value at POR	‘1’ = Bit is set	‘0’ = Bit is cleared	x = Bit is unknown

bit 15-0 **IE<15:0>:** Common Interrupt Enable bits
`1` = Common and individual interrupts are enabled for the corresponding channel
`0` = Common and individual interrupts are disabled for the corresponding channel

REGISTER 4-103: ADIEH: ADC INTERRUPT ENABLE REGISTER HIGH

U-0	U-0	U-0	U-0	U-0	U-0	U-0	U-0
—	—	—	—	—	—	—	—
bit 15							bit 8

U-0	U-0	U-0	R/W-0	R/W-0	R/W-0	R/W-0	R/W-0
—	—	—	IE<20:16>				
bit 7							bit 0

Legend:			
R = Readable bit	W = Writable bit	U = Unimplemented bit, read as ‘0’	
-n = Value at POR	‘1’ = Bit is set	‘0’ = Bit is cleared	x = Bit is unknown

bit 15-5 **Unimplemented:** Read as ‘`0`’
bit 4-0 **IE<20:16>:** Common Interrupt Enable bits
`1` = Common and individual interrupts are enabled for the corresponding channel
`0` = Common and individual interrupts are disabled for the corresponding channel

REGISTER 4-104: ADSTATL: ADC DATA READY STATUS REGISTER LOW

HSC/R-0	HSC/R-0	HSC/R-0	HSC/R-0	HSC/R-0	HSC/R-0	HSC/R-0	HSC/R-0
AN<15:8>RDY							
bit 15							bit 8

HSC/R-0	HSC/R-0	HSC/R-0	HSC/R-0	HSC/R-0	HSC/R-0	HSC/R-0	HSC/R-0
AN<7:0>RDY							
bit 7							bit 0

Legend:	U = Unimplemented bit, read as ‘0’		
R = Readable bit	W = Writable bit	HSC = Hardware Settable/Clearable bit	
-n = Value at POR	‘1’ = Bit is set	‘0’ = Bit is cleared	x = Bit is unknown

bit 15-0 **AN<15:0>RDY:** Common Interrupt Enable for Corresponding Analog Inputs bits
`1` = Channel conversion result is ready in the corresponding ADCBUFx register
`0` = Channel conversion result is not ready

REGISTER 4-105: ADSTATH: ADC DATA READY STATUS REGISTER HIGH

U-0	U-0	U-0	U-0	U-0	U-0	U-0	U-0
—	—	—	—	—	—	—	—
bit 15							bit 8

U-0	U-0	U-0	HSC/R-0	HSC/R-0	HSC/R-0	HSC/R-0	HSC/R-0
—	—	—	AN<20:16>RDY				
bit 7							bit 0

Legend:	U = Unimplemented bit, read as ‘0’		
R = Readable bit	W = Writable bit	HSC = Hardware Settable/Clearable bit	
-n = Value at POR	‘1’ = Bit is set	‘0’ = Bit is cleared	x = Bit is unknown

bit 15-5 **Unimplemented:** Read as ‘`0`’

bit 4-0 **AN<20:16>RDY:** Common Interrupt Enable for Corresponding Analog Inputs bits
`1` = Channel conversion result is ready in the corresponding ADCBUFx register
`0` = Channel conversion result is not ready

© 2017-2018 Microchip Technology Inc.

REGISTER 4-106: ADTRIGnL/ADTRIGnH: ADC CHANNEL TRIGGER n(x) SELECTION REGISTERS LOW AND HIGH (x = 0 TO 19; n = 0 TO 4)

U-0	U-0	U-0	R/W-0	R/W-0	R/W-0	R/W-0	R/W-0
—	—	—	TRGSRC(x+1)4	TRGSRC(x+1)3	TRGSRC(x+1)2	TRGSRC(x+1)1	TRGSRC(x+1)0
bit 15							bit 8

U-0	U-0	U-0	R/W-0	R/W-0	R/W-0	R/W-0	R/W-0
—	—	—	TRGSRCx4	TRGSRCx3	TRGSRCx2	TRGSRCx1	TRGSRCx0
bit 7							bit 0

Legend:			
R = Readable bit	W = Writable bit	U = Unimplemented bit, read as ‘0’	
-n = Value at POR	‘1’ = Bit is set	‘0’ = Bit is cleared	x = Bit is unknown

bit 15-13 **Unimplemented:** Read as ‘0’

bit 12-8 **TRGSRC(x+1)<4:0>:** Trigger Source Selection for Corresponding Analog Inputs bits (TRGSRC1 to TRGSRC19 – Odd)

11111 = ADTRG31 (PPS input)
11110 = Master PTG
11101 = Slave CLC1
11100 = Master CLC1
11011 = Reserved
11010 = Reserved
11001 = Master PWM3 Trigger 2
11000 = Master PWM1 Trigger 2
10111 = Slave SCCP4 PWM/IC interrupt
10110 = Slave SCCP3 PWM/IC interrupt
10101 = Slave SCCP2 PWM/IC interrupt
10100 = Slave SCCP1 PWM/IC interrupt
10011 = Reserved
10010 = Reserved
10001 = Reserved
10000 = Reserved
01111 = Slave PWM8 Trigger 1
01110 = Slave PWM7 Trigger 1
01101 = Slave PWM6 Trigger 1
01100 = Slave PWM5 Trigger 1
01011 = Slave PWM4 Trigger 2
01010 = Slave PWM4 Trigger 1
01001 = Slave PWM3 Trigger 2
01000 = Slave PWM3 Trigger 1
00111 = Slave PWM2 Trigger 2
00110 = Slave PWM2 Trigger 1
00101 = Slave PWM1 Trigger 2
00100 = Slave PWM1 Trigger 1
00011 = Reserved
00010 = Level software trigger
00001 = Common software trigger
00000 = No trigger is enabled

bit 7-5 **Unimplemented:** Read as ‘0’

REGISTER 4-106: ADTRIGnL/ADTRIGnH: ADC CHANNEL TRIGGER n(x) SELECTION REGISTERS LOW AND HIGH (x = 0 TO 19; n = 0 TO 4) (CONTINUED)

bit 4-0 **TRGSRCx<4:0>:** Common Interrupt Enable for Corresponding Analog Inputs bits (TRGSRC0 to TRGSRC20 – Even)

`11111` = ADTRG31 (PPS input)
`11110` = Master PTG
`11101` = Slave CLC1
`11100` = Master CLC1
`11011` = Reserved
`11010` = Reserved
`11001` = Master PWM3 Trigger 2
`11000` = Master PWM1 Trigger 2
`10111` = Slave SCCP4 PWM/IC interrupt
`10110` = Slave SCCP3 PWM/IC interrupt
`10101` = Slave SCCP2 PWM/IC interrupt
`10100` = Slave SCCP1 PWM/IC interrupt
`10011` = Reserved
`10010` = Reserved
`10001` = Reserved
`10000` = Reserved
`01111` = Slave PWM8 Trigger 1
`01110` = Slave PWM7 Trigger 1
`01101` = Slave PWM6 Trigger 1
`01100` = Slave PWM5 Trigger 1
`01011` = Slave PWM4 Trigger 2
`01010` = Slave PWM4 Trigger 1
`01001` = Slave PWM3 Trigger 2
`01000` = Slave PWM3 Trigger 1
`00111` = Slave PWM2 Trigger 2
`00110` = Slave PWM2 Trigger 1
`00101` = Slave PWM1 Trigger 2
`00100` = Slave PWM1 Trigger 1
`00011` = Reserved
`00010` = Level software trigger
`00001` = Common software trigger
`00000` = No trigger is enabled

© 2017-2018 Microchip Technology Inc.

REGISTER 4-107: ADCAL1H: ADC CALIBRATION REGISTER 1 HIGH

HS/R/W-0	U-0	U-0	U-0	U-0	r-0	R/W-0	R/W-0
CSHRRDY	—	—	—	—	—	CSHREN	CSHRRUN
bit 15							bit 8

U-0	U-0	U-0	U-0	U-0	U-0	U-0	U-0
—	—	—	—	—	—	—	—
bit 7							bit 0

Legend:	HS = Hardware Settable bit	r = Reserved bit	
R = Readable bit	W = Writable bit	U = Unimplemented bit, read as ‘0’	
-n = Value at POR	‘1’ = Bit is set	‘0’ = Bit is cleared	x = Bit is unknown

bit 15 **CSHRRDY:** Shared ADC Core Calibration Status Flag bit
1 = Shared ADC core calibration is finished
0 = Shared ADC core calibration is in progress

bit 14-11 **Unimplemented:** Read as ‘0’

bit 10 **Reserved:** Maintain as ‘0’

bit 9 **CSHREN:** Shared ADC Core Calibration Enable bit
1 = Shared ADC core calibration bits (CSHRRDY and CSHRRUN) can be accessed by software
0 = Shared ADC core calibration bits are disabled

bit 8 **CSHRRUN:** Shared ADC Core Calibration Start bit
1 = If this bit is set by software, the shared ADC core calibration cycle is started; this bit is cleared automatically by hardware
0 = Software can start the next calibration cycle

bit 7-0 **Unimplemented:** Read as ‘0’

REGISTER 4-108: ADCMPxCON: ADC DIGITAL COMPARATOR x CONTROL REGISTER (x = 0, 1, 2, 3)

U-0	U-0	U-0	HSC/R-0	HSC/R-0	HSC/R-0	HSC/R-0	HSC/R-0
—	—	—	CHNL4	CHNL3	CHNL2	CHNL1	CHNL0
bit 15							bit 8

R/W-0	R/W-0	HC/HS/R-0	R/W-0	R/W-0	R/W-0	R/W-0	R/W-0
CMPEN	IE	STAT	BTWN	HIHI	HILO	LOHI	LOLO
bit 7							bit 0

Legend:	HC = Hardware Clearable bit	U = Unimplemented bit, read as ‘0’	
R = Readable bit	W = Writable bit	HSC = Hardware Settable/Clearable bit	
-n = Value at POR	‘1’ = Bit is set	‘0’ = Bit is cleared	HS = Hardware Settable bit

bit 15-13 **Unimplemented:** Read as ‘0’

bit 12-8 **CHNL<4:0>:** Input Channel Number bits
If the comparator has detected an event for a channel, this channel number is written to these bits.
11111 = Reserved
...
10100 = Reserved
10100 = Band gap, 1.2V (AN20)
10011 = Temperature sensor (AN19)
10010 = S1AN18
...
00011 = S1AN3
00010 = S1AN2
00001 = S1AN1
00000 = S1AN0

bit 7 **CMPEN:** Comparator Enable bit
1 = Comparator is enabled
0 = Comparator is disabled and the STAT status bit is cleared

bit 6 **IE:** Comparator Common ADC Interrupt Enable bit
1 = Common ADC interrupt will be generated if the comparator detects a comparison event
0 = Common ADC interrupt will not be generated for the comparator

bit 5 **STAT:** Comparator Event Status bit
This bit is cleared by hardware when the channel number is read from the CHNL<4:0> bits.
1 = A comparison event has been detected since the last read of the CHNL<4:0> bits
0 = A comparison event has not been detected since the last read of the CHNL<4:0> bits

bit 4 **BTWN:** Between Low/High Comparator Event bit
1 = Generates a comparator event when ADCMPxLO ≤ ADCBUFx < ADCMPxHI
0 = Does not generate a digital comparator event when ADCMPxLO ≤ ADCBUFx < ADCMPxHI

bit 3 **HIHI:** High/High Comparator Event bit
1 = Generates a digital comparator event when ADCBUFx ≥ ADCMPxHI
0 = Does not generate a digital comparator event when ADCBUFx ≥ ADCMPxHI

bit 2 **HILO:** High/Low Comparator Event bit
1 = Generates a digital comparator event when ADCBUFx < ADCMPxHI
0 = Does not generate a digital comparator event when ADCBUFx < ADCMPxHI

bit 1 **LOHI:** Low/High Comparator Event bit
1 = Generates a digital comparator event when ADCBUFx ≥ ADCMPxLO
0 = Does not generate a digital comparator event when ADCBUFx ≥ ADCMPxLO

bit 0 **LOLO:** Low/Low Comparator Event bit
1 = Generates a digital comparator event when ADCBUFx < ADCMPxLO
0 = Does not generate a digital comparator event when ADCBUFx < ADCMPxLO

© 2017-2018 Microchip Technology Inc.

REGISTER 4-109: ADCMPxENL: ADC DIGITAL COMPARATOR x CHANNEL ENABLE REGISTER LOW (x = 0, 1, 2, 3)

R/W-0	R/W-0	R/W-0	R/W-0	R/W-0	R/W-0	R/W-0	R/W-0
CMPEN<15:8>							
bit 15							bit 8

R/W/0	R/W-0	R/W-0	R/W-0	R/W-0	R/W-0	R/W-0	R/W-0
CMPEN<7:0>							
bit 7							bit 0

Legend:			
R = Readable bit	W = Writable bit	U = Unimplemented bit, read as ‘0’	
-n = Value at POR	‘1’ = Bit is set	‘0’ = Bit is cleared	x = Bit is unknown

bit 15-0 **CMPEN<15:0>:** Comparator Enable for Corresponding Input Channels bits
`1` = Conversion result for corresponding channel is used by the comparator
`0` = Conversion result for corresponding channel is not used by the comparator

REGISTER 4-110: ADCMPxENH: ADC DIGITAL COMPARATOR x CHANNEL ENABLE REGISTER HIGH (x = 0, 1, 2, 3)

U-0	U-0	U-0	U-0	U-0	U-0	U-0	R/W-0
—	—	—	—	—	—	—	—
bit 15							bit 8

U-0	U-0	U-0	R/W-0	R/W-0	R/W-0	R/W-0	R/W-0
—	—	—	CMPEN<20:16>				
bit 7							bit 0

Legend:			
R = Readable bit	W = Writable bit	U = Unimplemented bit, read as ‘0’	
-n = Value at POR	‘1’ = Bit is set	‘0’ = Bit is cleared	x = Bit is unknown

bit 15-5 **Unimplemented:** Read as ‘`0`’
bit 4-0 **CMPEN<20:16>:** Comparator Enable for Corresponding Input Channels bits
`1` = Conversion result for corresponding channel is used by the comparator
`0` = Conversion result for corresponding channel is not used by the comparator

REGISTER 4-111: ADFLxCON: ADC DIGITAL FILTER x CONTROL REGISTER (x = 0, 1, 2, 3)

R/W-0	R/W-0	R/W-0	R/W-0	R/W-0	R/W-0	R/W-0	HSC/R-0
FLEN	MODE1	MODE0	OVRSAM2	OVRSAM1	OVRSAM0	IE	RDY
bit 15							bit 8

U-0	U-0	U-0	R/W-0	R/W-0	R/W-0	R/W-0	R/W-0
—	—	—	FLCHSEL4	FLCHSEL3	FLCHSEL2	FLCHSEL1	FLCHSEL0
bit 7							bit 0

Legend:	U = Unimplemented bit, read as ‘0’		
R = Readable bit	W = Writable bit	HSC = Hardware Settable/Clearable bit	
-n = Value at POR	‘1’ = Bit is set	‘0’ = Bit is cleared	x = Bit is unknown

bit 15 **FLEN:** Filter Enable bit
`1` = Filter is enabled
`0` = Filter is disabled and the RDY bit is cleared

bit 14-13 **MODE<1:0>:** Filter Mode bits
`11` = Averaging mode
`10` = Reserved
`01` = Reserved
`00` = Oversampling mode

bit 12-10 **OVRSAM<2:0>:** Filter Averaging/Oversampling Ratio bits
If MODE<1:0> = `00`:
`111` = 128x (16-bit result in the ADFLxDAT register is in 12.4 format)
`110` = 32x (15-bit result in the ADFLxDAT register is in 12.3 format)
`101` = 8x (14-bit result in the ADFLxDAT register is in 12.2 format)
`100` = 2x (13-bit result in the ADFLxDAT register is in 12.1 format)
`011` = 256x (16-bit result in the ADFLxDAT register is in 12.4 format)
`010` = 64x (15-bit result in the ADFLxDAT register is in 12.3 format)
`001` = 16x (14-bit result in the ADFLxDAT register is in 12.2 format)
`000` = 4x (13-bit result in the ADFLxDAT register is in 12.1 format)
If MODE<1:0> = `11` (12-bit result in the ADFLxDAT register in all instances):
`111` = 256x
`110` = 128x
`101` = 64x
`100` = 32x
`011` = 16x
`110` = 8x
`001` = 4x
`000` = 2x

bit 9 **IE:** Filter Common ADC Interrupt Enable bit
`1` = Common ADC interrupt will be generated when the filter result will be ready
`0` = Common ADC interrupt will not be generated for the filter

bit 8 **RDY:** Oversampling Filter Data Ready Flag bit
This bit is cleared by hardware when the result is read from the ADFLxDAT register.
`1` = Data in the ADFLxDAT register is ready
`0` = The ADFLxDAT register has been read and new data in the ADFLxDAT register is not ready

bit 7-5 **Unimplemented:** Read as ‘`0`’

© 2017-2018 Microchip Technology Inc.

REGISTER 4-111: ADFLxCON: ADC DIGITAL FILTER x CONTROL REGISTER (x = 0, 1, 2, 3) (CONTINUED)

bit 4-0 **FLCHSEL<4:0>:** Oversampling Filter Input Channel Selection bits

`11111` = Reserved
`...`
`10100` = Reserved
`10100` = Band gap, 1.2V (AN20)
`10011` = Temperature sensor (AN19)
`10010` = S1AN18
`...`
`00011` = S1AN3
`00010` = SPGA3 (S1AN2)
`00001` = S1AN1
`00000` = S1AN0

4.8 Programmable Gain Amplifier (PGA) Slave

Note 1: This data sheet summarizes the features of the dsPIC33CH128MP508 family of devices. It is not intended to be a comprehensive reference source. To complement the information in this data sheet, refer to **"Programmable Gain Amplifier (PGA)"** (DS70005146) in the *"dsPIC33/PIC24 Family Reference Manual"*, which is available from the Microchip web site (www.microchip.com).

The dsPIC33CH128MP508S1 family devices have three Programmable Gain Amplifiers (PGA1, PGA2, PGA3). The PGA is an op amp-based, non-inverting amplifier with user-programmable gains. The output of the PGA can be connected to a number of dedicated Sample-and-Hold inputs of the Analog-to-Digital Converter and/or to the high-speed analog comparator module. The PGA has four selectable gains and may be used as a ground referenced amplifier (single-ended) or used with an independent ground reference point.

Key features of the PGA module include:

- Single-Ended or Independent Ground Reference
- Selectable Gains: 4x, 8x, 16x and 32x (and 6x,12x, 24x and 48x with the 1.5 gain)
- High-Gain Bandwidth
- Rail-to-Rail Output Voltage
- Wide Input Voltage Range

Table 4-38 shows an overview of the PGA module.

TABLE 4-38: PGA MODULE OVERVIEW(1)

	Number of PGA Modules	Identical (Modules)
Master	—	—
Slave	3	—

Note 1: The Slave owns the PGA module, but it is shared with the Master.

FIGURE 4-23: PGAx MODULE BLOCK DIAGRAM

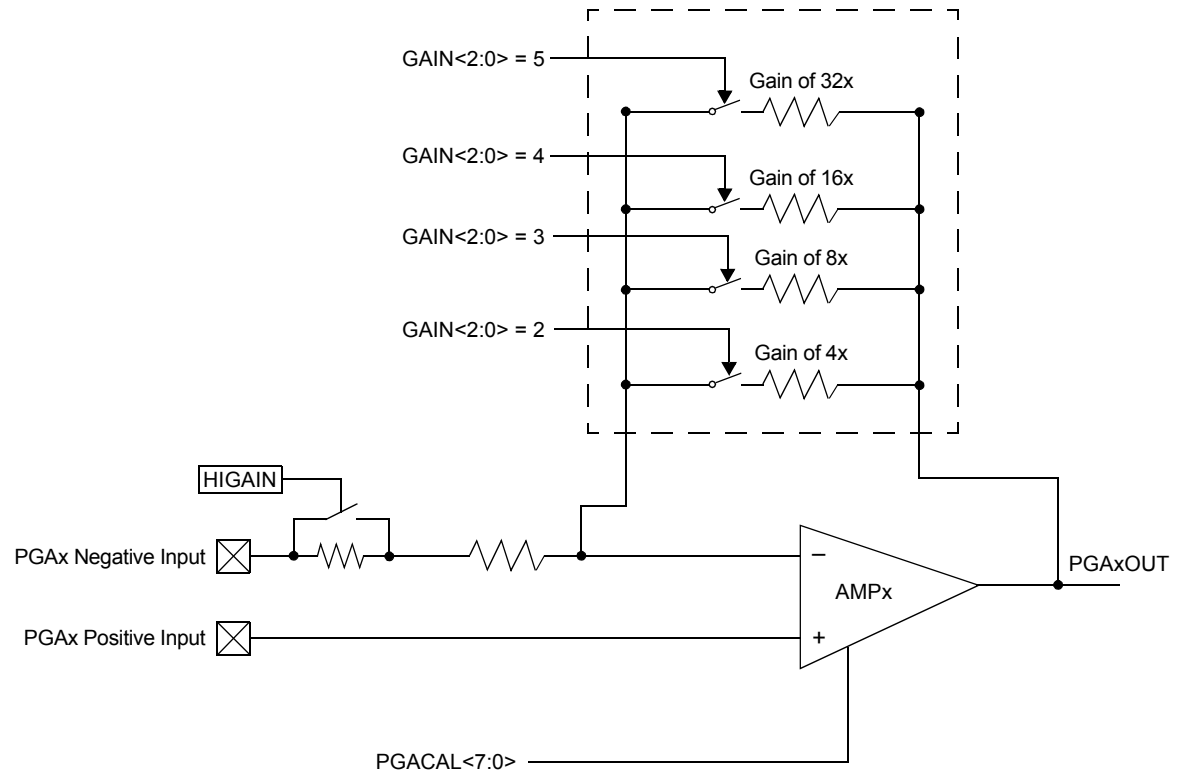

Note 1: x = 1, 2 and 3.

© 2017-2018 Microchip Technology Inc.

4.8.1 MODULE DESCRIPTION

The Programmable Gain Amplifiers are used to amplify small voltages (i.e., voltages across burden/shunt resistors) to improve the Signal-to-Noise Ratio (SNR) of the measured signal. The PGAx output voltage can be read by any of the four dedicated Sample-and-Hold circuits on the ADC module. The output voltage can also be fed to the comparator module for overcurrent/voltage protection. Figure 4-24 shows a functional block diagram of the PGAx module. Refer to **Section 3.9 "High-Speed, 12-Bit Analog-to-Digital Converter (Master ADC)"** for more interconnection details.

The gain of the PGAx module is selectable via the GAIN<2:0> bits in the PGAxCON register. There are four gains, ranging from 4x to 48x (with a 1.5 gain multiplier). The SELPI<2:0> and SELNI<2:0> bits in the PGAxCON register select one of the positive/negative inputs to the PGAx module. For single-ended applications, the SELNI<2:0> bits will select the ground as the negative input source. To provide an independent ground reference, S1PGAxN2 is available as the negative input source to the PGAx module.

> **Note 1:** Not all PGA positive/negative inputs are available on all devices. Refer to the specific device pinout for available input source pins.

The output voltage of the PGAx module can be connected to the DACOUT pin by setting the PGAOEN bit in the PGAxCON register. When the PGAOEN bit is enabled, the output voltage of PGA1 is connected to DACOUT. There is only one DACOUT pin.

If all three of the DACx output voltages and PGAx output voltages are connected to the DACOUT pin, the resulting output voltage would be a combination of signals. There is no assigned priority between the PGAx module and the DACx module.

FIGURE 4-24: PGAx FUNCTIONAL BLOCK DIAGRAM

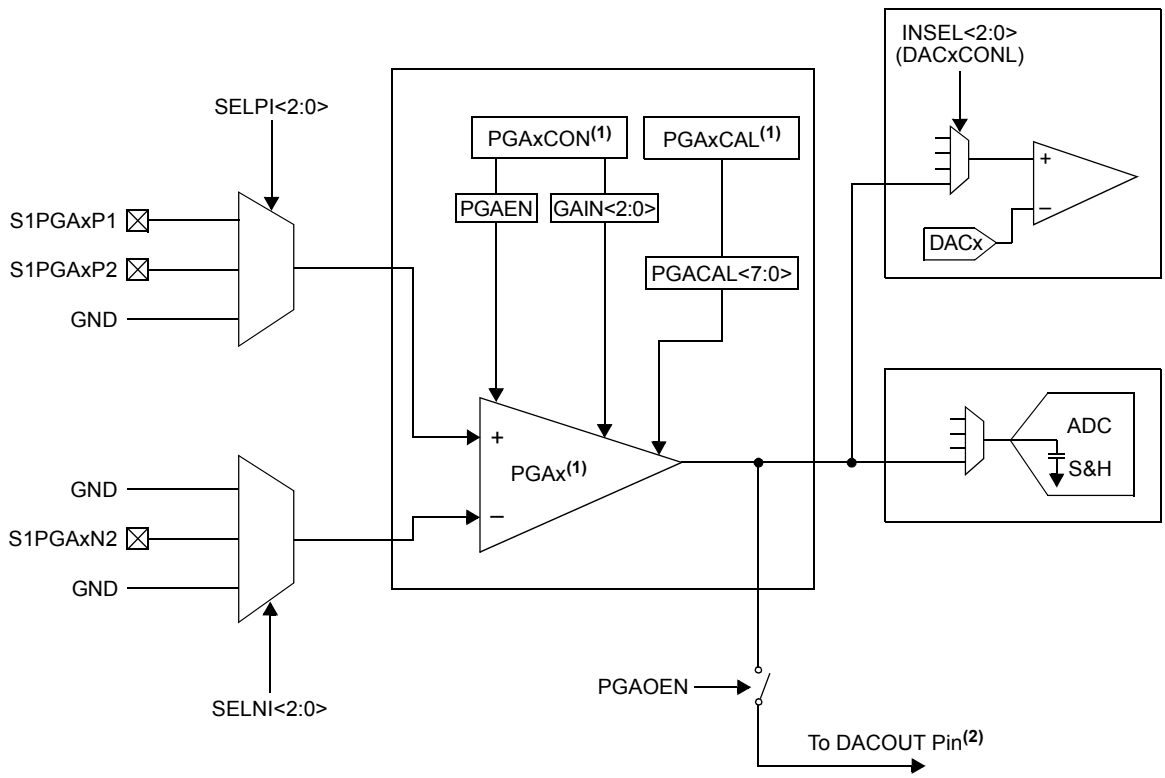

Note 1: x = 1, 2 and 3.

4.8.2 PGA RESOURCES

Many useful resources are provided on the main product page of the Microchip web site for the devices listed in this data sheet. This product page contains the latest updates and additional information.

4.8.2.1 Key Resources

- **"Programmable Gain Amplifier (PGA)"** (DS70005146) in the *"dsPIC33/PIC24 Family Reference Manual"*
- Code Samples
- Application Notes
- Software Libraries
- Webinars
- All Related *"dsPIC33/PIC24 Family Reference Manual"* Sections
- Development Tools

© 2017-2018 Microchip Technology Inc.

4.8.3 PGA CONTROL REGISTERS

REGISTER 4-112: PGAxCON: PGAx CONTROL REGISTER

R/W-0	R/W-0	R/W-0	R/W-0	R/W-0	R/W-0	R/W-0	R/W-0
PGAEN	PGAOEN	SELPI2	SELPI1	SELPI0	SELNI2	SELNI1	SELNI0
bit 15							bit 8

U-0	U-0	U-0	R/W-0	U-0	R/W-0	R/W-0	R/W-0
—	—	—	HIGAIN	—	GAIN2	GAIN1	GAIN0
bit 7							bit 0

Legend:			
R = Readable bit	W = Writable bit	U = Unimplemented bit, read as ‘0’	
-n = Value at POR	‘1’ = Bit is set	‘0’ = Bit is cleared	x = Bit is unknown

bit 15 **PGAEN:** PGAx Enable bit
1 = PGAx module is enabled
0 = PGAx module is disabled (reduces power consumption)

bit 14 **PGAOEN:** PGAx Output Enable bit
1 = PGAx output is connected to the DACOUT pin
0 = PGAx output is not connected to the DACOUT pin

bit 13-11 **SELPI<2:0>:** PGAx Positive Input Selection bits
111 = Reserved
110 = Reserved
101 = Reserved
100 = Reserved
011 = Ground
010 = Ground
001 = S1PGAxP2
000 = S1PGAxP1

bit 10-8 **SELNI<2:0>:** PGAx Negative Input Selection bits
111 = Reserved
110 = Reserved
101 = Reserved
100 = Reserved
011 = Ground (Single-Ended mode)
010 = Reserved
001 = S1PGAxN2
000 = Ground (Single-Ended mode)

bit 7-5 **Unimplemented:** Read as ‘0’

bit 4 **HIGAIN:** High-Gain Select bit
This bit, when asserted, enables a 50% increase in gain as specified by the GAIN<2:0> bits.

bit 3 **Unimplemented:** Read as ‘0’

bit 2-0 **GAIN<2:0>:** PGAx Gain Selection bits
111 = Reserved
110 = Reserved
101 = Gain of 32x
100 = Gain of 16x
011 = Gain of 8x
010 = Gain of 4x
001 = Reserved
000 = Reserved

REGISTER 4-113: PGAxCAL: PGAx CALIBRATION REGISTER

U-0	U-0	U-0	U-0	U-0	U-0	U-0	U-0
—	—	—	—	—	—	—	—
bit 15							bit 8

R/W-0	R/W-0	R/W-0	R/W-0	R/W-0	R/W-0	R/W-0	R/W-0
PGACAL<7:0>							
bit 7							bit 0

Legend:			
R = Readable bit	W = Writable bit	U = Unimplemented bit, read as ‘0’	
-n = Value at POR	‘1’ = Bit is set	‘0’ = Bit is cleared	x = Bit is unknown

bit 15-8 **Unimplemented:** Read as ‘0’

bit 7-0 **PGACAL<7:0>:** PGAx Offset Calibration bits

The calibration values for PGA1, PGA2 and PGA3 must be copied from Flash addresses, 0xF8001C, 0xF8001CE and 0xF800120, respectively, into these bits before the module is enabled. Refer to the calibration data address table (Table 21-4) in **Section 21.0 “Special Features”** for more information.

© 2017-2018 Microchip Technology Inc.

5.0 MASTER SLAVE INTERFACE (MSI)

Note 1: This data sheet summarizes the features of the dsPIC33CH128MP508 family of devices. It is not intended to be a comprehensive reference source. To complement the information in this data sheet, refer to **"Master Slave Interface (MSI) Module"** (DS70005278) in the *"dsPIC33/PIC24 Family Reference Manual"*, which is available from the Microchip web site (www.microchip.com).

The Master Slave Interface (MSI) module is a bridge between the Master and a Slave processor system, each of which operates within independent clock domains. The Master and Slave have their own registers to communicate between the MSI modules; the Master MSI registers are located in the Master SFR space and the Slave MSI registers are in the Slave SFR space. The Master Slave Interface (MSI) includes these characteristics:

- 16 Unidirectional Data Mailbox Registers:
  - Direction of each Mailbox register is fuse-selectable
  - Byte and word-addressable
- Eight Mailbox Data Flow Control Protocol Blocks:
  - Individual fuse enables
  - Write port active; read port passive (i.e., no read data request required)
  - Automatic, interrupt driven (or polled), data flow control mechanism across MSI clock boundary
  - Fuse assignable to any of the Mailbox registers, supports any length data buffers (up to the number of available Mailbox registers)
  - DMA transfer compatible
- Master to Slave and Slave to Master Interrupt Request with Acknowledge Data Flow Control
- Optional (parameterized) 2-Channel FIFO Memory Structure
- Parameterized Depth (between 16 and 32 words):
  - One read and one write channel
  - Circular operation with empty and full status, and interrupts
  - Overflow/underflow detection with interrupts to Master core and Slave core
  - Interrupt-based, software polled or DMA transfer compatible
- Master and Slave Processor Cross-Boundary Control and Status:
  - Readable operating mode status for both processors
  - Slave enable from Master (subject to satisfying a hardware write interlock sequencer)
  - Master interrupt when Slave is reset during code execution
  - Slave interrupt when Master is reset during code execution
- Optional (fuse) Decoupling of Master and Slave Resets; POR/BOR/$\overline{\text{MCLR}}$ always Resets Master and Slave; Influence of Remaining Run-Time Resets on the Slave Enable is Fuse-Programmable

5.1 Master MSI Control Registers

The following registers are associated with the Master MSI module and are located in the Master SFR space.

- Register 5-1: MSI1CON
- Register 5-2: MSI1STAT
- Register 5-3: MSI1KEY
- Register 5-4: MSI1MBXS
- Register 5-5: MSI1MBXnD
- Register 5-6: MSI1FIFOCS
- Register 5-7: MRSWFDATA
- Register 5-8: MWSRFDATA

REGISTER 5-1: MSI1CON: MSI1 MASTER CONTROL REGISTER

R/W-0	U-0	U-0	U-0	R/W-0	R/W-0	R/W-0	R/W-0
SLVEN	—	—	—	RFITSEL1	RFITSEL0	MTSIRQ	STMIACK
bit 15							bit 8

R/W-0	r-0	r-0	r-0	r-0	r-0	r-0	r-0
SRSTIE	—	—	—	—	—	—	—
bit 7							bit 0

Legend:	r = Reserved bit		
R = Readable bit	W = Writable bit	U = Unimplemented bit, read as ‘0’	
-n = Value at POR	‘1’ = Bit is set	‘0’ = Bit is cleared	x = Bit is unknown

bit 15 **SLVEN:** Slave Enable bit

This bit enables the Slave processor subsystem. Writing to the SLVEN bit is subject to satisfying the MSI1KEY unlock sequence.

1 = Slave processor is enabled, Slave Reset is released and execution is permitted
0 = Slave processor is disabled and held in Reset

bit 14-12 **Unimplemented:** Read as ‘0’

bit 11-10 **RFITSEL<1:0>:** Read FIFO Interrupt Threshold Select bits

11 = Trigger data valid interrupt when FIFO is full after Slave write
10 = Trigger data valid interrupt when FIFO is 75% full after Slave write
01 = Trigger data valid interrupt when FIFO is 50% full after Slave write
00 = Trigger data valid interrupt when 1st FIFO entry is written by Slave

bit 9 **MTSIRQ:** Master to Slave Interrupt Request bit

1 = Master has issued an interrupt request to the Slave
0 = Master has not issued a Slave interrupt request

bit 8 **STMIACK:** Master to Slave Interrupt Acknowledge bit (to Acknowledge the Slave interrupt)

1 = If STMIRQ = 1, Master Acknowledges Slave interrupt request, else protocol error
0 = If STMIRQ = 0, Master has not yet Acknowledged Slave interrupt request, else no Slave to Master interrupt request is pending

bit 7 **SRSTIE:** Slave Reset Event Interrupt Enable bit

1 = Master Slave Reset event interrupt occurs when Slave enters Reset state
0 = Master Slave Reset event interrupt does not occur when Slave enters Reset state

bit 6-0 **Reserved:** Read as ‘0’

© 2017-2018 Microchip Technology Inc.

REGISTER 5-2: MSI1STAT: MSI1 MASTER STATUS REGISTER

R-0	R/W-0	R-0	R-0	R/W-0	R-0	R-0	R-0
SLVRST	SLVWDRST	SLVPWR1	SLVPWR0	VERFERR	SLVP2ACT	STMIRQ	MTSIACK
bit 15							bit 8

R-0	r-0	r-0	r-0	r-0	r-0	r-0	r-0
SLVDBG	—	—	—	—	—	—	—
bit 7							bit 0

Legend:	r = Reserved bit		
R = Readable bit	W = Writable bit	U = Unimplemented bit, read as ‘0’	
-n = Value at POR	‘1’ = Bit is set	‘0’ = Bit is cleared	x = Bit is unknown

bit 15 **SLVRST:** Slave Reset Status bit
Indicates when the Slave is in Reset as the result of any Reset source. Generates a Slave Reset event interrupt to the Master on leading edge of being set when MTSIRQ (MSI1CON<9>) = 1.
1 = Slave is in Reset
0 = Slave is not in Reset

bit 14 **SLVWDRST:** Slave Watchdog Timer (WDT) Reset Status bit
Indicates when the Slave has been reset as the result of a WDT time-out. The SLVRST bit will also get set (at the same time this bit is set) by the hardware.
1 = Slave has been reset by the WDT
0 = Slave has not been reset by the WDT

bit 13-12 **SLVPWR<1:0>:** Slave Low-Power Operating Mode Status bits
11 = Reserved
10 = Slave is in Sleep mode
01 = Slave is in Idle mode
00 = Slave is not in a Low-Power mode

bit 11 **VERFERR:** PRAM Verify Error Status bit
1 = Error detected during execution of VFSLV (PRAM write verify) instruction
0 = No error detected during execution of VFSLV (PRAM write verify) instruction

bit 10 **SLVP2ACT:** Slave PRAM Panel 2 Active Status bit
This bit is a reflection of the Slave NVM controller, P2ACTIV (NVMCON<10>) status bit, which is toggled after successful execution of a BOOTSWP instruction (during a Slave PRAM LiveUpdate operation).
1 = Slave NVM controller, P2ACTIV (NVMCON<10>) = 1
0 = Slave NVM controller P2ACTIV (NVMCON<10>) = 0

bit 9 **STMIRQ:** Slave to Master Interrupt Request Status bit
1 = Slave has issued an interrupt request to the Master
0 = Slave has not issued a Master interrupt request

bit 8 **MTSIACK:** Acknowledge Status bit (Slave acknowledged)
1 = If MTSIRQ = 1, Slave Acknowledges Master interrupt request, else protocol error
0 = If MTSIRQ = 1, Slave has not yet Acknowledged Master interrupt request, else no Master to Slave interrupt request is pending

bit 7 **SLVDBG:** Slave Debug Mode Status bit
1 = Slave is operating in Debug mode
0 = Slave is operating in Mission or Application mode

bit 6-0 **Reserved:** Read as ‘0’

REGISTER 5-3: MSI1KEY: MSI1 MASTER INTERLOCK KEY REGISTER

U-0	U-0	U-0	U-0	U-0	U-0	U-0	U-0
—	—	—	—	—	—	—	—
bit 15							bit 8

W-0	W-0	W-0	W-0	W-0	W-0	W-0	W-0
MSI1KEY<7:0>							
bit 7							bit 0

Legend:			
R = Readable bit	W = Writable bit	U = Unimplemented bit, read as ‘0’	
-n = Value at POR	‘1’ = Bit is set	‘0’ = Bit is cleared	x = Bit is unknown

bit 15-8 **Unimplemented:** Read as ‘0’

bit 7-0 **MSI1KEY<7:0>:** MSI1 Key bits
The MSI1KEYx bits are monitored for specific write values.

REGISTER 5-4: MSI1MBXS: MSI1 MASTER MAILBOX DATA TRANSFER STATUS REGISTER

U-0	U-0	U-0	U-0	U-0	U-0	U-0	U-0
—	—	—	—	—	—	—	—
bit 15							bit 8

R/W-0	R/W-0	R/W-0	R/W-0	R/W-0	R/W-0	R/W-0	R/W-0
DTRDY<H:A>							
bit 7							bit 0

Legend:			
R = Readable bit	W = Writable bit	U = Unimplemented bit, read as ‘0’	
-n = Value at POR	‘1’ = Bit is set	‘0’ = Bit is cleared	x = Bit is unknown

bit 15-8 **Unimplemented:** Read as ‘0’

bit 7-0 **DTRDY<H:A>:** Data Ready Status bits

1 = Data transmitter has indicated that data is available to be read by data receiver in MSI1MBXnD (DTRDYx is automatically set by a data transmitter processor write to assigned MSI1MBXnD); Meaning when configured as a:
- Transmitter: Data is written. Waiting for receiver to read.
- Receiver: New data is ready to read.

0 = No data is available to be read by receiver in MSI1MBXnD (or the handshake protocol logic block is disabled)

© 2017-2018 Microchip Technology Inc.

REGISTER 5-5: MSI1MBXnD: MSI1 MASTER MAILBOX n DATA REGISTER (n = 0 to 15)

R/W-0	R/W-0	R/W-0	R/W-0	R/W-0	R/W-0	R/W-0	R/W-0
MSIMBXnD<15:8>							
bit 15							bit 8

R/W-0	R/W-0	R/W-0	R/W-0	R/W-0	R/W-0	R/W-0	R/W-0
MSIMBXnD<7:0>							
bit 7							bit 0

Legend:			
R = Readable bit	W = Writable bit	U = Unimplemented bit, read as ‘0’	
-n = Value at POR	‘1’ = Bit is set	‘0’ = Bit is cleared	x = Bit is unknown

bit 15-0 **MSIMBXnD<15:0>:** MSI1 Mailbox n Data bits

When Configuration bit, MBXMx = `1` (programmed):
Mailbox Data Direction: Master read, Slave write; Master MSIMBXnD<15:0> bits become R-0 (a Master write to MSIMBXnD<15:0> will have no effect).

When Configuration bit, MBXMx = `0` (programmed):
Mailbox Data Direction: Master write, Slave read; Master MSIMBXnD<15:0> bits become R/W-0.

REGISTER 5-6: MSI1FIFOCS: MSI1 MASTER FIFO CONTROL/STATUS REGISTER

R/W-0	U-0	U-0	U-0	R/C-0	R-0	R-0	R-1
WFEN	—	—	—	WFOF(1)	WFUF(1)	WFFULL(1)	WFEMPTY(2)
bit 15							bit 8

R/W-0	U-0	U-0	U-0	R-0	R/C-0	R-0	R-1
RFEN	—	—	—	RFOF	RFUF	RFFULL	RFEMPTY
bit 7							bit 0

Legend:	C = Clearable bit		
R = Readable bit	W = Writable bit	U = Unimplemented bit, read as ‘0’	
-n = Value at POR	‘1’ = Bit is set	‘0’ = Bit is cleared	x = Bit is unknown

bit 15 **WFEN:** Write FIFO Enable bit
1 = Enables (Master) Write FIFO
0 = Disables and initializes (Master) Write FIFO

bit 14-12 **Unimplemented:** Read as ‘0’

bit 11 **WFOF:** Write FIFO Overflow bit(1)
1 = Write FIFO overflow is detected
0 = No Write FIFO overflow is detected

bit 10 **WFUF:** Write FIFO Underflow bit(1)
1 = Write FIFO underflow is detected
0 = No Write FIFO underflow is detected

bit 9 **WFFULL:** Write FIFO Full Status bit(1)
1 = Write FIFO is full, last write by Master to Write FIFO (WFDATA) was into the last free location
0 = Write FIFO is not full

bit 8 **WFEMPTY:** Write FIFO Empty Status bit(2)
1 = Write FIFO is empty; last read by Slave from Write FIFO (WFDATA) emptied the FIFO of all valid data or FIFO is disabled (and initialized to the empty state)
0 = Write FIFO contains valid data not yet read by the Slave

bit 7 **RFEN:** Read FIFO Enable bit
1 = Enables (Master) the Read FIFO
0 = Disables and initializes the (Master) Read FIFO

bit 6-4 **Unimplemented:** Read as ‘0’

bit 3 **RFOF:** Read FIFO Overflow bit
1 = Read FIFO overflow is detected
0 = No Read FIFO overflow is detected

bit 2 **RFUF:** Read FIFO Underflow bit
1 = Read FIFO underflow is detected
0 = No Read FIFO underflow is detected

bit 1 **RFFULL:** Read FIFO Full Status bit
1 = Read FIFO is full; last write by Slave to Read FIFO (RFDATA) was into the last free location
0 = Read FIFO is not full

bit 0 **RFEMPTY:** Read FIFO Empty Status bit
1 = Read FIFO is empty; last read by Master from Read FIFO (RFDATA) emptied the FIFO of all valid data or FIFO is disabled (and initialized to the empty state)
0 = Read FIFO contains valid data not yet read by the Master

Note 1: Once set, these bits can be cleared by making WFEN = 0.
2: Clearing WFEN will also cause the WFEMPTY status bit to be set. After WFEN is subsequently set, WFEMPTY will remain set until the Master writes data into the Write FIFO.

© 2017-2018 Microchip Technology Inc.

REGISTER 5-7: MRSWFDATA: MASTER READ (SLAVE WRITE) FIFO DATA REGISTER

R-0	R-0	R-0	R-0	R-0	R-0	R-0	R-0
MRSWFDATA<15:8>							
bit 15							bit 8

R-0	R-0	R-0	R-0	R-0	R-0	R-0	R-0
MRSWFDATA<7:0>							
bit 7							bit 0

Legend:			
R = Readable bit	W = Writable bit	U = Unimplemented bit, read as ‘0’	
-n = Value at POR	‘1’ = Bit is set	‘0’ = Bit is cleared	x = Bit is unknown

bit 15-0 **MRSWFDATA<15:0>:** Read FIFO Data Out Register bits

REGISTER 5-8: MWSRFDATA: MASTER WRITE (SLAVE READ) FIFO DATA REGISTER

R-0	R-0	R-0	R-0	R-0	R-0	R-0	R-0
MWSRFDATA<15:8>							
bit 15							bit 8

R-0	R-0	R-0	R-0	R-0	R-0	R-0	R-0
MWSRFDATA<7:0>							
bit 7							bit 0

Legend:			
R = Readable bit	W = Writable bit	U = Unimplemented bit, read as ‘0’	
-n = Value at POR	‘1’ = Bit is set	‘0’ = Bit is cleared	x = Bit is unknown

bit 15-0 **MWSRFDATA<15:0>:** Write FIFO Data Out Register bits

5.2 Slave MSI Control Registers

The following registers are associated with the Slave MSI module and are located in the Slave SFR space.

- Register 5-9: SI1CON
- Register 5-10: SI1STAT
- Register 5-11: SI1MBX
- Register 5-12: SI1MBXnD
- Register 5-13: SI1FIFOCS
- Register 5-14: SWMRFDATA
- Register 5-15: SRMWFDATA

REGISTER 5-9: SI1CON: MSI1 SLAVE CONTROL REGISTER

U-0	U-0	U-0	U-0	R/W-0	R/W-0	R/W-0	R/W-0
—	—	—	—	RFITSEL1	RFITSEL0	STMIRQ	MTSIACK
bit 15							bit 8

R/W-0	U-0	U-0	U-0	U-0	U-0	U-0	U-0
MRSTIE	—	—	—	—	—	—	—
bit 7							bit 0

Legend:			
R = Readable bit	W = Writable bit	U = Unimplemented bit, read as ‘0’	
-n = Value at POR	‘1’ = Bit is set	‘0’ = Bit is cleared	x = Bit is unknown

bit 15-12 **Unimplemented:** Read as ‘0’

bit 11-10 **RFITSEL<1:0>:** Read FIFO Interrupt Threshold Select bits
11 = Triggers data valid interrupt when FIFO is full after Slave write
10 = Triggers data valid interrupt when FIFO is 75% full after Slave write
01 = Triggers data valid interrupt when FIFO is 50% full after Slave write
00 = Triggers data valid interrupt when 1st FIFO entry is written by Slave

bit 9 **STMIRQ:** Slave to Master Interrupt Request bit
1 = Interrupts the Master
0 = Does not interrupt the Master

bit 8 **MTSIACK:** Slave to Acknowledge Master Interrupt bit
1 = If MTSIRQ = 1, Slave Acknowledges Master interrupt request, else protocol error
0 = If MTSIRQ = 0, Slave has not yet Acknowledged Master interrupt request, else no Master to Slave interrupt request is pending

bit 7 **MRSTIE:** Master Reset Event Interrupt Enable bit
1 = Slave Master Reset event interrupt occurs when Master enters Reset state
0 = Slave Master Reset event interrupt does not occur when Master enters Reset state

bit 6-0 **Unimplemented:** Read as ‘0’

© 2017-2018 Microchip Technology Inc.

REGISTER 5-10: SI1STAT: MSI1 SLAVE STATUS REGISTER

R-0	U-0	R-0	R-0	U-0	U-0	R-0	R-0
MSTRST	—	MSTPWR1	MSTPWR0	—	—	MTSIRQ	STMIACK
bit 15							bit 8

U-0	U-0	U-0	U-0	U-0	U-0	U-0	U-0
—	—	—	—	—	—	—	—
bit 7							bit 0

Legend:			
R = Readable bit	W = Writable bit	U = Unimplemented bit, read as ‘0’	
-n = Value at POR	‘1’ = Bit is set	‘0’ = Bit is cleared	x = Bit is unknown

bit 15 **MSTRST:** Master Reset Status bit
Indicates when the Master is in Reset as the result of any Reset source. Generates a Master Reset event interrupt to the Slave on the leading edge of being set when STMIRQ (SI1CON<9>) = 1.
1 = Master is in Reset
0 = Master is not in Reset

bit 14 **Unimplemented:** Read as ‘0’

bit 13-12 **MSTPWR<1:0>:** Master Low-Power Operating Mode Status bits
11 = Reserved
10 = Master is in Sleep mode
01 = Master is in Idle mode
00 = Master is not in a Low-Power mode

bit 11-10 **Unimplemented:** Read as ‘0’

bit 9 **MTSIRQ:** Master interrupt Slave bit
1 = Master has issued an interrupt request to the Slave
0 = Master has not issued a Slave interrupt request

bit 8 **STMIACK:** Master Acknowledgment Status bit
1 = If STMIRQ = 1, Master Acknowledges Slave interrupt request, else protocol error
0 = If STMIRQ = 0, Master has not yet Acknowledged Slave interrupt request, else no Slave to Master interrupt request is pending

bit 7-0 **Unimplemented:** Read as ‘0’

REGISTER 5-11: SI1MBX: MSI1 SLAVE MAILBOX DATA TRANSFER STATUS REGISTER

U-0	U-0	U-0	U-0	U-0	U-0	U-0	U-0
—	—	—	—	—	—	—	—
bit 15							bit 8

R-0	R-0	R-0	R-0	R-0	R-0	R-0	R-0
DTRDY<H:A>							
bit 7							bit 0

Legend:			
R = Readable bit	W = Writable bit	U = Unimplemented bit, read as ‘0’	
-n = Value at POR	‘1’ = Bit is set	‘0’ = Bit is cleared	x = Bit is unknown

bit 15-8 **Unimplemented:** Read as ‘0’

bit 7-0 **DTRDY<H:A>:** Data Ready Status bits

1 = Data transmitter has indicated that data is available to be read by data receiver in MSI1MBXnD (DTRDYx is automatically set by a data transmitter processor write to assigned MSI1MBXnD) Meaning when configured as a:
- Transmitter: Data is written. Waiting for receiver to read.
- Receiver: New data is ready to read.

0 = No data is available to be read in receiver, MSI1MBXnD (or the handshake protocol logic block is disabled)

REGISTER 5-12: SI1MBXnD: MSI1 SLAVE MAILBOX n DATA REGISTER (n = 0 TO 15)

R/W-0	R/W-0	R/W-0	R/W-0	R/W-0	R/W-0	R/W-0	R/W-0
SIMBXnD<15:8>							
bit 15							bit 8

R/W-0	R/W-0	R/W-0	R/W-0	R/W-0	R/W-0	R/W-0	R/W-0
SIMBXnD<7:0>							
bit 7							bit 0

Legend:			
R = Readable bit	W = Writable bit	U = Unimplemented bit, read as ‘0’	
-n = Value at POR	‘1’ = Bit is set	‘0’ = Bit is cleared	x = Bit is unknown

bit 15-0 **SIMBXnD<15:0>:** MSI1 Slave Mailbox Data n bits

When Configuration bit, MBXMx = 1 (programmed):
Mailbox Data Direction: Master read, Slave writes Master; SIMBXnD<15:0> bits become R-0 (a Master write to SIMBXnD<15:0> will have no effect).

When Configuration bit, MBXMx = 0 (programmed):
Mailbox Data Direction: Master write, Slave reads Master; SIMBXnD<15:0> bits become R/W-0.

© 2017-2018 Microchip Technology Inc.

REGISTER 5-13: SI1FIFOCS: MSI1 SLAVE FIFO STATUS REGISTER

R-0	U-0	U-0	U-0	R-0	R/C-0	R-0	R-1
SRFEN	—	—	—	SRFOF	SRFUF	SRFFULL	SRFEMPTY
bit 15							bit 8

R-0	U-0	U-0	U-0	R/C-0	R-0	R-0	R-1
SWFEN	—	—	—	SWFOF	SWFUF	SWFFULL	SWFEMPTY
bit 7							bit 0

Legend:	C = Clearable bit		
R = Readable bit	W = Writable bit	U = Unimplemented bit, read as ‘0’	
-n = Value at POR	‘1’ = Bit is set	‘0’ = Bit is cleared	x = Bit is unknown

bit 15 **SRFEN:** Slave Read (Master Write) FIFO Enable bit
1 = Enables Slave Read (Master Write) FIFO
0 = Disables Slave Read (Master Write) FIFO

bit 14-12 **Unimplemented:** Read as ‘0’

bit 11 **SRFOF:** Slave Read (Master Write) FIFO Overflow bit
1 = Slave Read FIFO overflow is detected
0 = No Slave Read FIFO overflow is detected

bit 10 **SRFUF:** Slave Read (Master Write) FIFO Underflow bit
1 = Slave Read (Master Write) FIFO underflow is detected
0 = No Slave Read (Master Write) FIFO underflow is detected

bit 9 **SRFFULL:** Slave Read (Master Write) FIFO Full Status bit
1 = Slave Read (Master Write) FIFO is full; last write by Master to Slave Read FIFO (SRMWFDATA) was into the last free location
0 = Slave Read (Master Write) FIFO is not full

bit 8 **SRFEMPTY:** Slave Read (Master Write) FIFO Empty Status bit
1 = Slave Read (Master Write) FIFO is empty; last read by Slave from Read FIFO (SRMWFDATA) emptied the FIFO of all valid data or FIFO is disabled (and initialized to the empty state)
0 = Slave Read (Master Write) FIFO contains valid data not yet read by the Slave

bit 7 **SWFEN:** Slave Write (Master Read) FIFO Enable bit
1 = Enables Slave Write (Master Read) FIFO
0 = Disables Slave Write (Master Read) FIFO

bit 6-4 **Unimplemented:** Read as ‘0’

bit 3 **SWFOF:** Slave Write (Master Read) FIFO Overflow bit
1 = Slave Write (Master Read) FIFO overflow is detected
0 = No Slave Write (Master Read) FIFO overflow is detected

bit 2 **SWFUF:** Slave Write (Master Read) FIFO Underflow bit
1 = Slave Write (Master Read) FIFO underflow is detected
0 = No Slave Write (Master Read) FIFO underflow is detected

bit 1 **SWFFULL:** Slave Write (Master Read) FIFO Full Status bit
1 = Slave Write (Master Read) FIFO is full; last write by Slave to FIFO (SWMRFDATA) was into the last free location
0 = Slave Write (Master Read) FIFO is not full

bit 0 **SWFEMPTY:** Slave Write (Master Read) FIFO Empty Status bit
1 = Slave Write (Master Read) FIFO is empty; last read by Master from Read FIFO emptied the FIFO of all valid data or FIFO is disabled (and initialized to the empty state)
0 = Slave Write (Master Read) FIFO contains valid data not yet read by the Master

REGISTER 5-14: SWMRFDATA: SLAVE WRITE (MASTER READ) FIFO DATA REGISTER

W-0	W-0	W-0	W-0	W-0	W-0	W-0	W-0
SWMRFDATA<15:8>							
bit 15							bit 8

W-0	W-0	W-0	W-0	W-0	W-0	W-0	W-0
SWMRFDATA<7:0>							
bit 7							bit 0

Legend:			
R = Readable bit	W = Writable bit	U = Unimplemented bit, read as ‘0’	
-n = Value at POR	‘1’ = Bit is set	‘0’ = Bit is cleared	x = Bit is unknown

bit 15-0 **SWMRFDATA<15:0>:** Read FIFO Data Out Register bits

REGISTER 5-15: SRMWFDATA: SLAVE READ (MASTER WRITE) FIFO DATA REGISTER

R-0	R-0	R-0	R-0	R-0	R-0	R-0	R-0
SRMWFDATA<15:8>							
bit 15							bit 8

R-0	R-0	R-0	R-0	R-0	R-0	R-0	R-0
SRMWFDATA<7:0>							
bit 7							bit 0

Legend:			
R = Readable bit	W = Writable bit	U = Unimplemented bit, read as ‘0’	
-n = Value at POR	‘1’ = Bit is set	‘0’ = Bit is cleared	x = Bit is unknown

bit 15-0 **SRMWFDATA<15:0>:** Write FIFO Data Out Register bits

© 2017-2018 Microchip Technology Inc.

5.3 Slave Processor Control

The MSI contains three control bits related to Slave processor control within the MSI1CON register.

5.3.1 SLAVE ENABLE (SLVEN) CONTROL

The SLVEN (MSI1CON<15>) control bit provides a means for the Master processor to enable or disable the Slave processor.

The Slave is disabled when SLVEN (MSI1CON<15>) = 0. In this state:

- The Slave is held in the Reset state
- The Master has access to the Slave PRAM (to load it out of a device Reset)
- The Slave Reset status bit, SLVRST (MSI1STAT<15>) = 1

The Slave is enabled when SLVEN (MSI1CON<15>) = 1. In this state:

- The Slave Reset is released and it will start to execute code in whatever mode it is configured to operate in
- The Master processor will no longer have access to the Slave PRAM
- The Slave Reset status bit, SLVRST (MSI1STAT<15>) = 0

Note: The SLVRST (MSI1STAT<15>) status bit indicates when the Slave is in Reset. The associated interrupt only occurs when the Slave enters the Reset state after having previously not been in Reset. That is, no interrupt can be generated until the Slave is first enabled.

The SLVEN bit may only be modified after satisfying the hardware write interlock. The SLVEN bit is protected from unexpected writes through a software unlocking sequence that is based on the MSI1KEY register. Given the critical nature of the MSI control interface, the MSI macro unlock mechanism is independent from that of the Flash controller for added robustness.

Completing a predefined data write sequence to the MSI1KEY register will open a window. The SLVEN bit should be written on the first instruction that follows the unlock sequence. No other bits within the MSI1CON register are affected by the interlock. The MSI1KEY register is not a physical register. A read of the MSI1KEY register will read all '0's.

When the SLVEN bit lock is enabled (i.e., the bits are locked and cannot be modified), the instruction sequence shown in Example 5-1 must be executed to open the lock. The unlock sequence is a prerequisite to both setting and clearing the target control bit.

Note: It is recommended to enable SRSTIE (MSI1CON<7>) = 1 prior to enabling the SLVEN bit. This will make the design robust and will update the Master with the Reset state of the Slave.

EXAMPLE 5-1: MSI ENABLE OPERATION

```
//Unlock Key to allow MSI Enable control
MOV.b   #0x55, W0
MOV.b   WREG, MSI1KEY
MOV.b   #0xAA, W0
MOV.b   WREG, MSI1KEY
// Enable MSI
BSET    MSI1CON, SLVEN
```

EXAMPLE 5-2: MSI ENABLE OPERATION IN C CODE

```
#include <libpic30.h>
_start_slave();
```

5.4 Slave Reset Coupling Control

In all operating modes, the user may couple or decouple the Master Run-Time Resets to the Slave Reset by using the Master Slave Reset Enable (S1MSRE) fuse. The Resets are effectively coupled by directing the selected Reset source to the SLVEN bit Reset.

In all operating modes, the user may also choose whether the SLVEN bit is reset or not in the event of a Slave Run-Time Reset by using the Slave Reset Enable (S1SSRE) fuse.

A user may choose to reset SLVEN in the event of a Slave Reset because that event could be an indicator of a problem with Slave execution. The Slave would be placed in Reset and the Master alerted (via the Slave Reset event interrupt, need to make SRSTIE (MSI1CON<7> = 1) to attempt to rectify the problem. The Master must re-enable the Slave by setting the SLVEN bit again.

Alternatively, the user may choose to not halt the Slave in the event of a Slave Reset, and just allow it to restart execution after a Reset and continue operation as soon as possible. The Slave Reset event interrupt would still occur, but could be ignored by the Master.

TABLE 5-1: APPLICATION MODE SLVEN RESET CONTROL TRUTH TABLE

S1MSRE	S1SSRE	SLVEN Bit Reset Source	Application Effect
0	0	Master Resets(1)	• Slave is reset and disabled in the event of a POR, BOR or $\overline{\text{MCLR}}$ Reset. Master must re-enable Slave. • Slave Run-Time Resets will not disable Slave. Slave will reset and continue execution (and may optionally interrupt Master).
1	0	Master Resets(1)	• Slave is reset and disabled in the event of a POR, BOR or $\overline{\text{MCLR}}$ Reset. Master must re-enable Slave. • Slave Run-Time Resets will not disable Slave. Slave will reset and continue execution (and may optionally interrupt Master).
0	1	Master Resets(1) and Slave Resets(2)	• Slave is reset and disabled in the event of any Slave Run-Time Reset (and may optionally interrupt Master). Master must re-enable Slave to execute the Slave code. • Master Run-Time Resets will not affect Slave operation.
1	1	POR/BOR/$\overline{\text{MCLR}}$(1) Slave Resets(2)	• Slave is reset and disabled in the event of any Slave Run-Time Reset or Master Reset. Master must re-enable Slave. This represents the default state (S1MSRE and S1SSRE are unprogrammed).

Note 1: Master Resets include any Master Reset, such as POR/BOR/$\overline{\text{MCLR}}$ Resets.

2: Slave Resets include any Slave Reset, plus POR/BOR/$\overline{\text{MCLR}}$ Resets (in Application mode).

5.4.1 INTER-PROCESSOR INTERRUPT REQUEST AND ACKNOWLEDGE

The Master and Slave processors may interrupt each other directly. The Master may issue an interrupt request to the Slave by asserting the MTSIRQ (MSI1CON<9>) control bit. Similarly, the Slave may issue an interrupt request to the Master by asserting the STMIRQ (MSI1STAT<9>) control bit.

The interrupts are Acknowledged through the use of the Interrupt Acknowledge bits, MTSIACK (MSI1STAT<8>) for the Master to Slave interrupt request and STMIACK (MSI1CON<8>) for the Slave to Master interrupt request.

5.4.2 READ ADDRESS POINTERS FOR FIFOs

The MSI macro may also include a set of two FIFOs, one for data reads from the Slave and the other for data writes to the Slave. The Read Address Pointers for the Read and Write FIFOs are held in the RDPTR<6:0> bits (MSI1CON<6:0>) and WRPTR<6:0 bits (MSI1STAT<6:0>), respectively. These bits are accessible only from within Debug mode.

© 2017-2018 Microchip Technology Inc.

6.0 OSCILLATOR WITH HIGH-FREQUENCY PLL

Note 1: This data sheet summarizes the features of the dsPIC33CH128MP508 family of devices. It is not intended to be a comprehensive reference source. To complement the information in this data sheet, refer to **"Oscillator Module with High-Speed PLL"** (DS70005255) in the *"dsPIC33/PIC24 Family Reference Manual"*, which is available from the Microchip web site (www.microchip.com).

The dsPIC33CH128MP508 family oscillator with high-frequency PLL includes these characteristics:

- Master and Core Subsystems
- Internal and External Oscillator Sources Shared between Master and Slave Cores
- Master and Slave Independent On-Chip Phase-Locked Loop (PLL) to Boost Internal Operating Frequency on Select Internal and External Oscillator Sources
- Master and Slave Independent Auxiliary PLL (APLL) Clock Generator to Boost Operating Frequency for Peripherals
- Master and Slave Independent Doze mode for System Power Savings
- Master and Slave Independent Scalable Reference Clock Output (REFCLKO)
- On-the-Fly Clock Switching between Various Clock Sources
- Fail-Safe Clock Monitoring (FSCM) that Detects Clock Failure and Permits Safe Application Recovery or Shutdown

A block diagram of the dsPIC33CH128MP508 oscillator system is shown in Figure 6-1.

FIGURE 6-1: MASTER AND SLAVE CORE SHARED CLOCK SOURCES BLOCK DIAGRAM

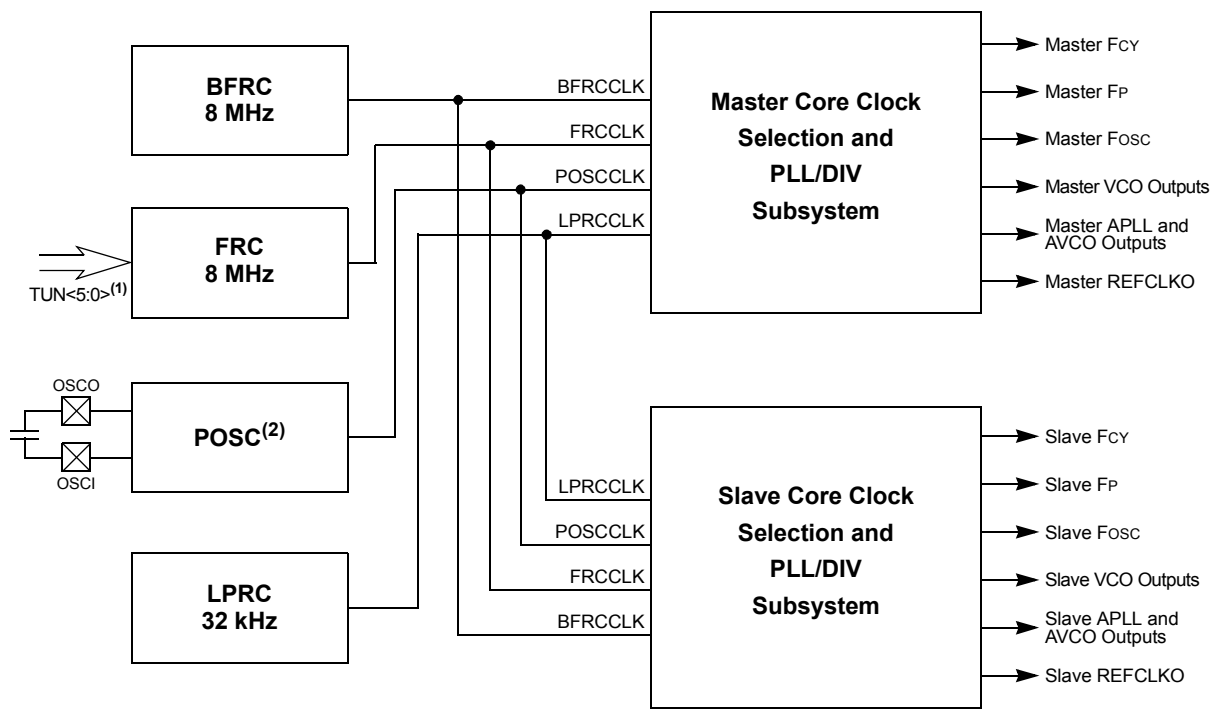

Note 1: FRC Oscillator tuning bits are configured in the Master core OSCTUN register.
2: POSC is configured through the POSCMD<1:0> bits in the Master FOSC Configuration register.

FIGURE 6-2: MASTER CORE OSCILLATOR SUBSYSTEM

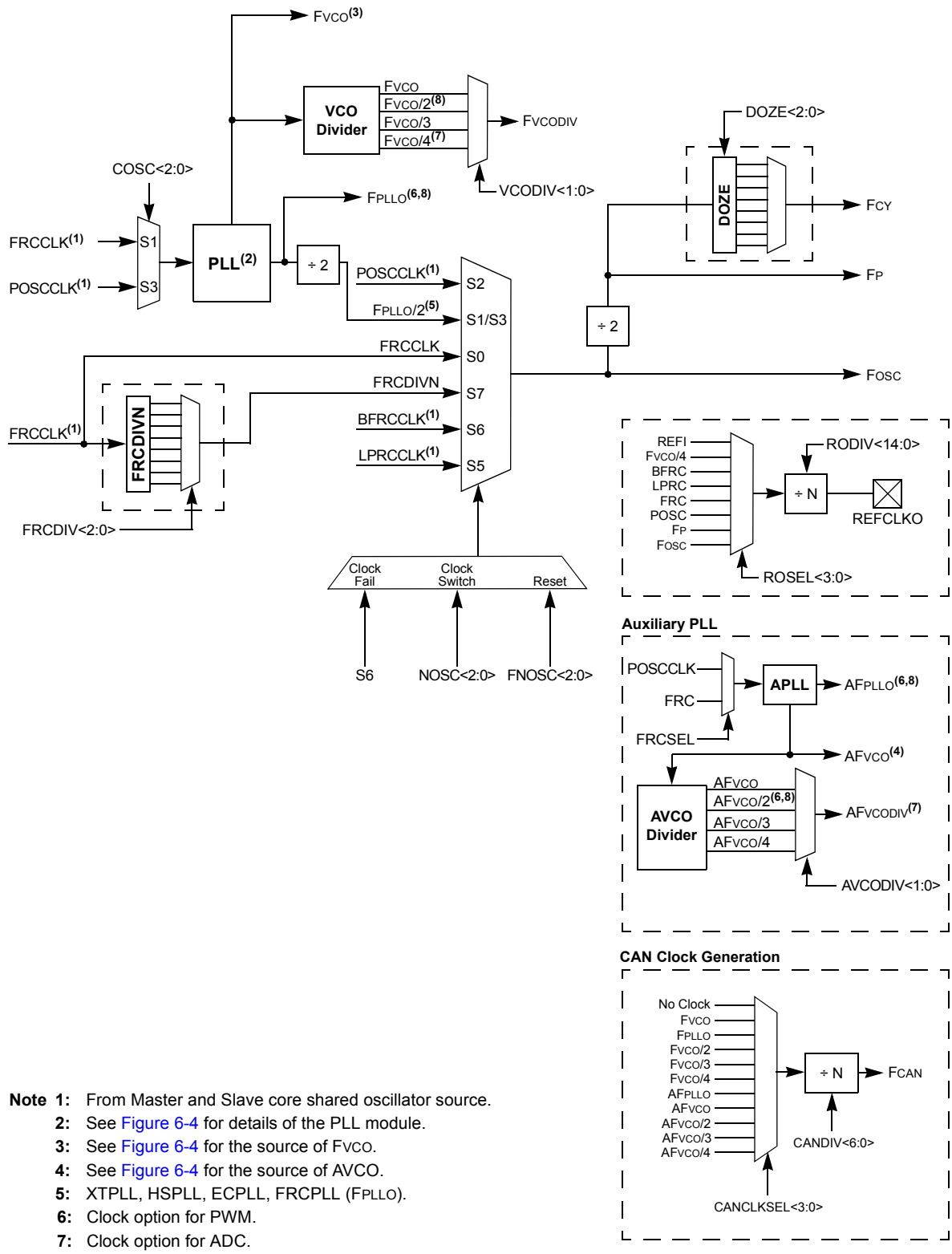

Note 1: From Master and Slave core shared oscillator source.
2: See Figure 6-4 for details of the PLL module.
3: See Figure 6-4 for the source of FVCO.
4: See Figure 6-4 for the source of AVCO.
5: XTPLL, HSPLL, ECPLL, FRCPLL (FPLLO).
6: Clock option for PWM.
7: Clock option for ADC.
8: Clock option for DAC.

© 2017-2018 Microchip Technology Inc.

FIGURE 6-3: SLAVE CORE OSCILLATOR SUBSYSTEM

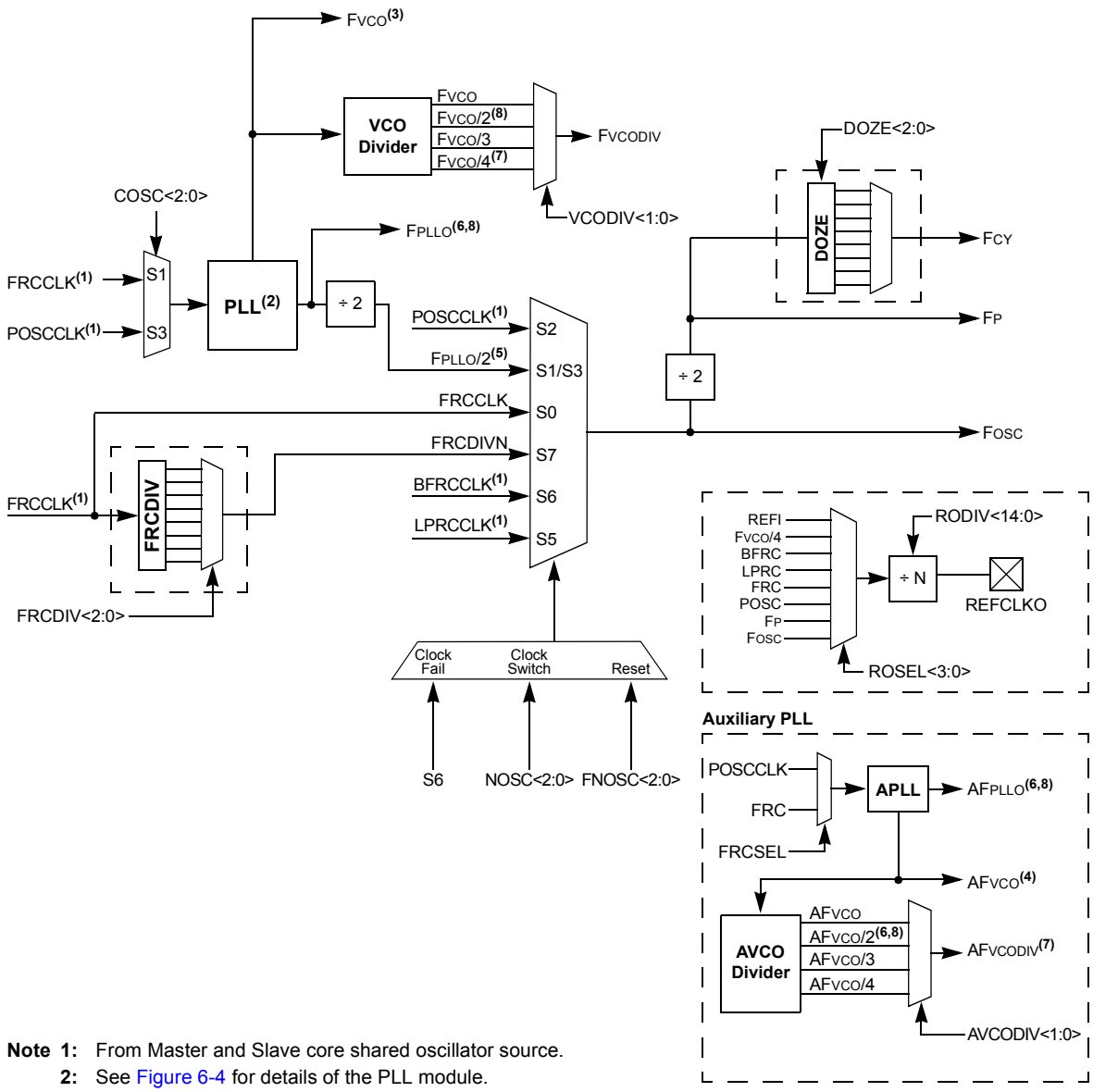

Note 1: From Master and Slave core shared oscillator source.
2: See Figure 6-4 for details of the PLL module.
3: See Figure 6-4 for the source of FVCO.
4: See Figure 6-4 for the source of AVCO.
5: XTPLL, HSPLL, ECPLL, FRCPLL (FPLLO).
6: Clock option for PWM.
7: Clock option for ADC.
8: Clock option for DAC.

The Primary Oscillator and internal FRC Oscillator sources can optionally use an on-chip PLL to obtain higher operating speeds. There are two independent instantiations of PLL for the Master and Slave clock subsystems. Figure 6-4 illustrates a block diagram of the Master/Slave core PLL module.

For PLL operation, the following requirements must be met at all times without exception:

- The PLL Input Frequency (F_{PLLI}) must be in the range of 8 MHz to 64 MHz
- The PFD Input Frequency (F_{PFD}) must be in the range of 8 MHz to (F_{VCO}/16) MHz

The VCO Output Frequency (F_{VCO}) must be in the range of 400 MHz to 1600 MHz

FIGURE 6-4: MASTER/SLAVE CORE PLL AND VCO DETAIL

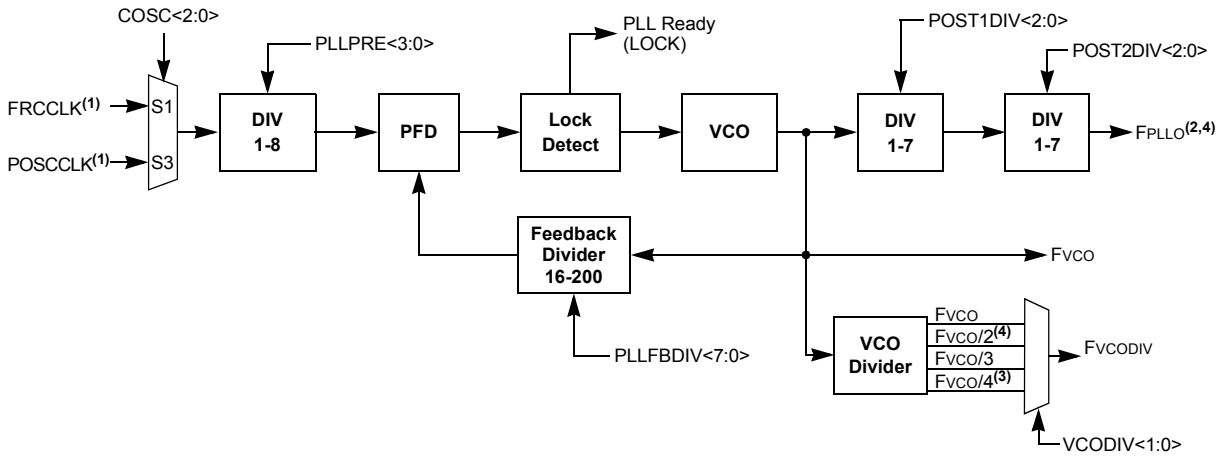

Note 1: From Master and Slave core shared oscillator source.
2: Clock option for PWM.
3: Clock option for ADC.
4: Clock option for DAC.

© 2017-2018 Microchip Technology Inc.

Equation 6-1 provides the relationship between the PLL Input Frequency (F_{PLLI}) and VCO Output Frequency (F_{VCO}).

EQUATION 6-1: MASTER/SLAVE CORE F_{VCO} CALCULATION

$$F_{VCO} = F_{PLLI} \times \left(\frac{M}{N1}\right) = F_{PLLI} \times \left(\frac{PLLFBDIV<7:0>}{PLLPRE<3:0>}\right)$$

Equation 6-2 provides the relationship between the PLL Input Frequency (F_{PLLI}) and PLL Output Frequency (F_{PLLO}).

EQUATION 6-2: MASTER/SLAVE CORE F_{PLLO} CALCULATION

$$F_{PLLO} = F_{PLLI} \times \left(\frac{M}{N1 \times N2 \times N3}\right) = F_{PLLI} \times \left(\frac{PLLFBDIV<7:0>}{PLLPRE<3:0> \times POST1DIV<2:0> \times POST2DIV<2:0>}\right)$$

Where:

$M = PLLFBDIV<7:0>$
$N1 = PLLPRE<3:0>$
$N2 = POST1DIV<2:0>$
$N3 = POST2DIV<2:0>$

Note: The PLL Phase Detector Input Divider Select (PLLPREx) bits and the PLL Feedback Divider (PLLFBDIVx) bits should not be changed when operating in PLL mode. Therefore, the user must start in either a non-PLL mode or clock switch to a non-PLL mode (e.g., internal FRC Oscillator) to make any necessary changes and then clock switch to the desired PLL mode.

It is not permitted to directly clock switch from one PLL clock source to a different PLL clock source. The user would need to transition between PLL clock sources with a clock switch to a non-PLL clock source.

EXAMPLE 6-1: CODE EXAMPLE FOR USING MASTER PRIMARY PLL WITH 8 MHz INTERNAL FRC

```
//code example for 50 MIPS system clock using 8MHz FRC
// Select FRC on POR
#pragma  config FNOSC = FRC       // Oscillator Source Selection (Internal Fast RC (FRC))
#pragma  config IESO = OFF
// Enable Clock Switching
#pragma  config FCKSM = CSECMD
int      main()
{
// Configure PLL prescaler, both PLL postscalers, and PLL feedback divider
CLKDIVbits.PLLPRE = 1;            // N1=1
PLLFBDbits.PLLFBDIV = 125;        // M = 125
PLLDIVbits.POST1DIV = 5;          // N2=5
PLLDIVbits.POST2DIV = 1;          // N3=1
// Initiate Clock Switch to FRC with PLL (NOSC=0b001)
__builtin_write_OSCCONH(0x01);
__builtin_write_OSCCONL(OSCCON | 0x01);
// Wait for Clock switch to occur
while    (OSCCONbits.OSWEN!= 0);
}
```

Note: *F_{PLLO} = F_{PLLI} * M/(N1 * N2 * N3); F_{PLLI} = 8; M = 125; N1 = 1; N2 = 5; N3 = 1;*
so *F_{PLLO} = 8 * 125/(1 * 5 * 1) = 200 MHz* or *50 MIPS.*

EXAMPLE 6-2: CODE EXAMPLE FOR USING SLAVE PRIMARY PLL WITH 8 MHz INTERNAL FRC

```
//code example for 60 MIPS system clock using 8MHz FRC
// Select Internal FRC at POR
// Select FRC on POR
#pragma config  S1FNOSC = FRC      // Oscillator Source Selection (Internal Fast RC (FRC))
#pragma config  S1IESO = OFF       // Two-speed Oscillator Start-up Enable bit (Start up with
user-selected oscillator source)
// Enable Clock Switching
#pragma config  S1FCKSM = CSECMD
int     main()
{
// Configure PLL prescaler, both PLL postscalers, and PLL feedback divider
CLKDIVbits.PLLPRE = 1;            // N1=1
PLLFBDbits.PLLFBDIV = 150;        // M = 150
PLLDIVbits.POST1DIV = 5;          // N2=5
PLLDIVbits.POST2DIV = 1;          // N3=1
// Initiate Clock Switch to FRC with PLL (NOSC=0b001)
__builtin_write_OSCCONH(0x01);
__builtin_write_OSCCONL(OSCCON | 0x01);
// Wait for Clock switch to occur
while   (OSCCONbits.OSWEN!= 0);
}
```

Note: *F_{PLLO} = F_{PLLI} * M/(N1 * N2 * N3); F_{PLLI} = 8; M = 150; N1 = 1; N2 = 5; N3 = 1;*
so *F_{PLLO} = 8 * 150/(1 * 5 * 1) = 240 MHz* or *60 MIPS.*

© 2017-2018 Microchip Technology Inc.

The dsPIC33CH128MP508 device family implements an Auxiliary PLL (APLL) module for each core present. There are two independent instantiations of APLL for the Master and Slave clock subsystems. The APLL is used to generate various peripheral clock sources independent of the system clock. Figure 6-5 shows a block diagram of the Master/Slave core APLL module.

For APLL operation, the following requirements must be met at all times without exception:

- The APLL Input Frequency (AF_{PLLI}) must be in the range of 8 MHz to 64 MHz
- The APFD Input Frequency (AF_{PFD}) must be in the range of 8 MHz to (AF_{VCO}/16) MHz
- The AVCO Output Frequency (AF_{VCO}) must be in the range of 400 MHz to 1600 MHz

FIGURE 6-5: MASTER/SLAVE CORE APLL AND VCO DETAIL

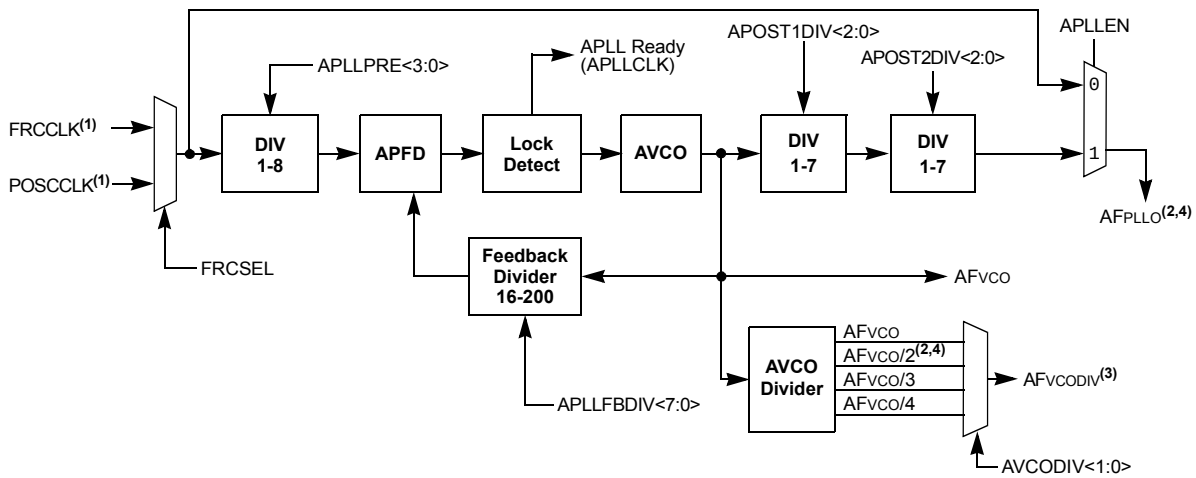

Note 1: From Master and Slave core shared oscillator source.
2: Clock option for PWM.
3: Clock option for ADC.
4: Clock option for DAC.

Equation 6-3 provides the relationship between the APLL Input Frequency (AF_{PLLI}) and the AVCO Output Frequency (AF_{VCO}).

EQUATION 6-3: MASTER/SLAVE CORE AF_{VCO} CALCULATION

$$AF_{VCO} = AF_{PLLI} \times \left(\frac{M}{N1}\right) = AF_{PLLI} \times \left(\frac{APLLFBDIV<7:0>}{APLLPRE<3:0>}\right)$$

Equation 6-4 provides the relationship between the APLL Input Frequency (AF_{PLLI}) and APLL Output Frequency (AF_{PLLO}).

EQUATION 6-4: MASTER/SLAVE CORE AF_{PLLO} CALCULATION

$$AF_{PLLO} = AF_{PLLI} \times \left(\frac{M}{N1 \times N2 \times N3}\right) = AF_{PLLI} \times \left(\frac{APLLFBDIV<7:0>}{APLLPRE<3:0> \times APOST1DIV<2:0> \times APOST2DIV<2:0>}\right)$$

Where:

M = $APLLFBDIV<7:0>$
$N1$ = $APLLPRE<3:0>$
$N2$ = $APOST1DIV<2:0>$
$N3$ = $APOST2DIV<2:0>$

EXAMPLE 6-3: CODE EXAMPLE FOR USING MASTER OR SLAVE AUXILIARY PLL WITH THE INTERNAL FRC OSCILLATOR

```
//code example for AFVCO = 1 GHz and AFPLLO = 500 MHz using 8 MHz internal FRC
// Configure the source clock for the APLL
ACLKCON1bits.FRCSEL = 1;              // Select internal FRC as the clock source
// Configure the APLL prescaler, APLL feedback divider, and both APLL postscalers.
ACLKCON1bits.APLLPRE = 1;             // N1 = 1
APLLFBD1bits.APLLFBDIV = 125;         // M = 125
APLLDIV1bits.APOST1DIV = 2;           // N2 = 2
APLLDIV1bits.APOST2DIV = 1;           // N3 = 1
// Enable APLL
ACLKCON1bits.APLLEN = 1;
```

Note: Even with the APLLEN bit set, another peripheral must generate a clock request before the APLL will start.

© 2017-2018 Microchip Technology Inc.

6.1 CPU Clocking

While the Master and Slave subsystems share access to a single set of oscillator sources, all other clocking logic is implemented individually. The Master and Slave core can be configured independently to use any of the following clock configurations:

- Primary Oscillator (POSC) on the OSCI and OSCO pins
- Internal Fast RC Oscillator (FRC) with optional clock divider
- Internal Low-Power RC Oscillator (LPRC)
- Primary Oscillator with PLL (ECPLL, HSPLL, XTPLL)
- Internal Fast RC Oscillator with PLL (FRCPLL)
- Backup Internal Fast RC Oscillator (BFRC)

Each core's system clock source is divided by two to produce the internal instruction cycle clock. In this document, the instruction cycle clock is denoted by FCY. The timing diagram in Figure 6-6 illustrates the relationship between the system clock (FOSC), the instruction cycle clock (FCY) and the Program Counter (PC).

The internal instruction cycle clock (FCY) can be output on the OSCO I/O pin if the Primary Oscillator mode (POSCMD<1:0>) is not configured as HS/XT.

FIGURE 6-6: CLOCK AND INSTRUCTION CYCLE TIMING

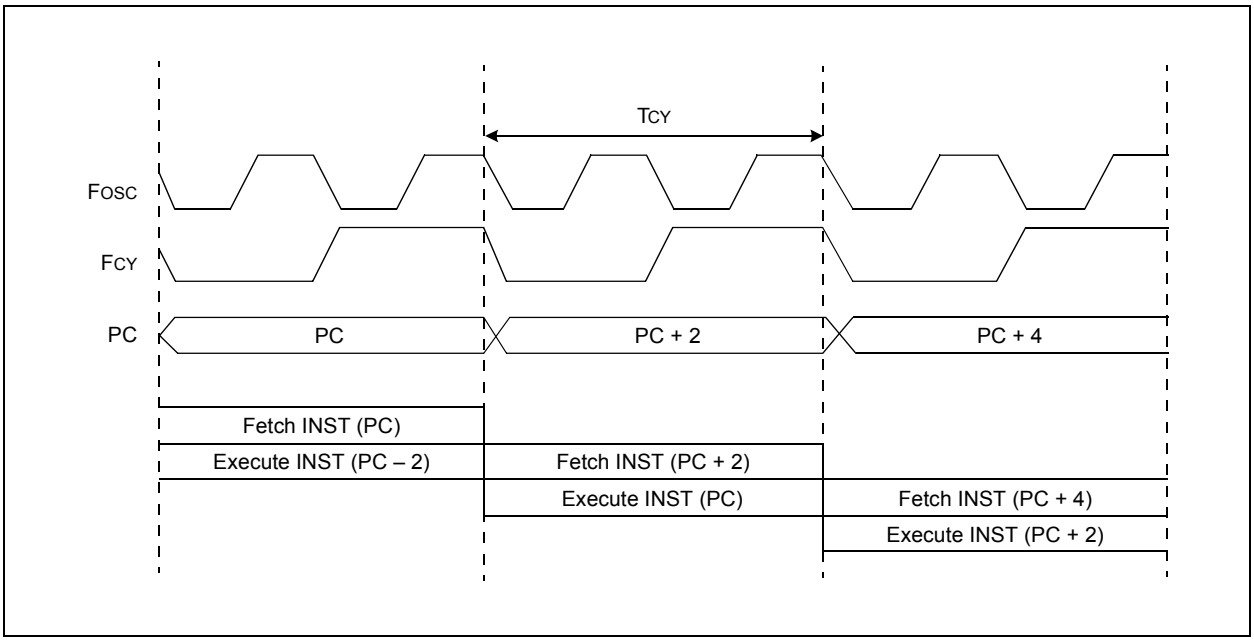

6.2 Master Oscillator Configuration Registers

Table 6-1 lists the configuration settings that select the device's Master core oscillator source and operating mode at a POR.

TABLE 6-1: CONFIGURATION BIT VALUES FOR CLOCK SELECTION FOR THE MASTER

Oscillator Source	Oscillator Mode	FNOSC<2:0> Value	POSCMD<1:0> Value(3)	Notes
S0	Fast RC Oscillator (FRC)	000	xx	1
S1	Fast RC Oscillator with PLL (FRCPLL)	001	xx	1
S2	Primary Oscillator (EC)	010	00	1
S2	Primary Oscillator (XT)	010	01	
S2	Primary Oscillator (HS)	010	10	
S3	Primary Oscillator with PLL (ECPLL)	011	00	1
S3	Primary Oscillator with PLL (XTPLL)	011	01	
S3	Primary Oscillator with PLL (HSPLL)	011	10	
S4	Reserved	100	xx	
S5	Low-Power RC Oscillator (LPRC)	101	xx	1
S6	Backup FRC (BFRC)	110	xx	1
S7	Fast RC Oscillator with ÷ N Divider (FRCDIVN)	111	xx	1, 2

Note 1: The OSCO pin function is determined by the OSCIOFNC Configuration bit.

2: This is the default oscillator mode for an unprogrammed (erased) device.

3: The POSCMDx bits are only available in the Master FOSC Configuration register.

© 2017-2018 Microchip Technology Inc.

6.3 Slave Oscillator Configuration Registers

Table 6-2 lists the configuration settings that select the device's Slave core oscillator source and operating mode at a POR.

TABLE 6-2: CONFIGURATION BIT VALUES FOR CLOCK SELECTION FOR THE SLAVE

Oscillator Source	Oscillator Mode	S1FNOSC<2:0> Value	POSCMD<1:0> Value(3)	Notes
S0	Fast RC Oscillator (FRC)	000	xx	1
S1	Fast RC Oscillator with PLL (FRCPLL)	001	xx	1
S2	Primary Oscillator (EC)	010	00	1
S2	Primary Oscillator (XT)	010	01	
S2	Primary Oscillator (HS)	010	10	
S3	Primary Oscillator with PLL (ECPLL)	011	00	1
S3	Primary Oscillator with PLL (XTPLL)	011	01	
S3	Primary Oscillator with PLL (HSPLL)	011	10	
S4	Reserved	100	xx	1
S5	Low-Power RC Oscillator (LPRC)	101	xx	1
S6	Backup FRC (BFRC)	110	xx	1
S7	Fast RC Oscillator with ÷ N Divider (FRCDIVN)	111	xx	1, 2

Note 1: The OSCO pin function is determined by the S1OSCIOFNC Configuration bit. If both the Master core OSCIOFNC and Slave core S1OSCIOFNC bits are set, the Master core OSCIOFNC bit has priority.

2: This is the default oscillator mode for an unprogrammed (erased) device.

3: The POSCMD<1:0> bits are only available in the Master Oscillator Configuration register, FOSC. This setting configures the Primary Oscillator for use by either core.

6.4 Master Special Function Registers

These Special Function Registers provide run-time control and status of the Master core's oscillator system.

6.4.1 MASTER OSCILLATOR CONTROL REGISTERS

REGISTER 6-1: OSCCON: OSCILLATOR CONTROL REGISTER (MASTER)(1)

U-0	R-0	R-0	R-0	U-0	R/W-y	R/W-y	R/W-y
—	COSC2	COSC1	COSC0	—	NOSC2(2)	NOSC1(2)	NOSC0(2)
bit 15							bit 8

R/W-0	U-0	R-0	U-0	R/W-0	U-0	U-0	R/W-0
CLKLOCK	—	LOCK	—	CF(3)	—	—	OSWEN
bit 7							bit 0

Legend:	y = Value set from Configuration bits on POR		
R = Readable bit	W = Writable bit	U = Unimplemented bit, read as '0'	
-n = Value at POR	'1' = Bit is set	'0' = Bit is cleared	x = Bit is unknown

bit 15 **Unimplemented:** Read as '0'

bit 14-12 **COSC<2:0>:** Current Oscillator Selection bits (read-only)
111 = Fast RC Oscillator (FRC) with Divide-by-n (FRCDIVN)
110 = Backup FRC (BFRC)
101 = Low-Power RC Oscillator (LPRC)
100 = Reserved – default to FRC
011 = Primary Oscillator (XT, HS, EC) with PLL (XTPLL, HSPLL, ECPLL)
010 = Primary Oscillator (XT, HS, EC)
001 = Fast RC Oscillator (FRC) with PLL (FRCPLL)
000 = Fast RC Oscillator (FRC)

bit 11 **Unimplemented:** Read as '0'

bit 10-8 **NOSC<2:0>:** New Oscillator Selection bits(2)
111 = Fast RC Oscillator (FRC) with Divide-by-n (FRCDIVN)
110 = Backup FRC (BFRC)
101 = Low-Power RC Oscillator (LPRC)
100 = Reserved – default to FRC
011 = Primary Oscillator (XT, HS, EC) with PLL (XTPLL, HSPLL, ECPLL)
010 = Primary Oscillator (XT, HS, EC)
001 = Fast RC Oscillator (FRC) with PLL (FRCPLL)
000 = Fast RC Oscillator (FRC)

bit 7 **CLKLOCK:** Clock Lock Enable bit
1 = If (FCKSM0 = 1), then clock and PLL configurations are locked; if (FCKSM0 = 0), then clock and PLL configurations may be modified
0 = Clock and PLL selections are not locked, configurations may be modified

bit 6 **Unimplemented:** Read as '0'

Note 1: Writes to this register require an unlock sequence.
2: Direct clock switches between any Primary Oscillator mode with PLL and FRCPLL mode are not permitted. This applies to clock switches in either direction. In these instances, the application must switch to FRC mode as a transitional clock source between the two PLL modes.
3: This bit should only be cleared in software. Setting the bit in software (= 1) will have the same effect as an actual oscillator failure and will trigger an oscillator failure trap.

© 2017-2018 Microchip Technology Inc.

REGISTER 6-1: OSCCON: OSCILLATOR CONTROL REGISTER (MASTER)(1) (CONTINUED)

bit 5	**LOCK:** PLL Lock Status bit (read-only) 1 = Indicates that PLL is in lock or PLL start-up timer is satisfied 0 = Indicates that PLL is out of lock, start-up timer is in progress or PLL is disabled
bit 4	**Unimplemented:** Read as '0'
bit 3	**CF:** Clock Fail Detect bit(3) 1 = FSCM has detected a clock failure 0 = FSCM has not detected a clock failure
bit 2-1	**Unimplemented:** Read as '0'
bit 0	**OSWEN:** Oscillator Switch Enable bit 1 = Requests oscillator switch to the selection specified by the NOSC<2:0> bits 0 = Oscillator switch is complete

Note 1: Writes to this register require an unlock sequence.

2: Direct clock switches between any Primary Oscillator mode with PLL and FRCPLL mode are not permitted. This applies to clock switches in either direction. In these instances, the application must switch to FRC mode as a transitional clock source between the two PLL modes.

3: This bit should only be cleared in software. Setting the bit in software (= 1) will have the same effect as an actual oscillator failure and will trigger an oscillator failure trap.

REGISTER 6-2: CLKDIV: CLOCK DIVIDER REGISTER (MASTER)

R/W-0	R/W-0	R/W-1	R/W-1	R/W-0	R/W-0	R/W-0	R/W-0
ROI	DOZE2(1)	DOZE1(1)	DOZE0(1)	DOZEN(2,3)	FRCDIV2	FRCDIV1	FRCDIV0
bit 15							bit 8

U-0	U-0	r-0	r-0	R/W-0	R/W-0	R/W-0	R/W-1
—	—	—	—	PLLPRE3(4)	PLLPRE2(4)	PLLPRE1(4)	PLLPRE0(4)
bit 7							bit 0

Legend:	r = Reserved bit		
R = Readable bit	W = Writable bit	U = Unimplemented bit, read as ‘0’	
-n = Value at POR	‘1’ = Bit is set	‘0’ = Bit is cleared	x = Bit is unknown

bit 15 **ROI:** Recover on Interrupt bit
1 = Interrupts will clear the DOZEN bit and the processor clock, and the peripheral clock ratio is set to 1:1
0 = Interrupts have no effect on the DOZEN bit

bit 14-12 **DOZE<2:0>:** Processor Clock Reduction Select bits(1)
111 = FP divided by 128
110 = FP divided by 64
101 = FP divided by 32
100 = FP divided by 16
011 = FP divided by 8 (default)
010 = FP divided by 4
001 = FP divided by 2
000 = FP divided by 1

bit 11 **DOZEN:** Doze Mode Enable bit(2,3)
1 = DOZE<2:0> field specifies the ratio between the peripheral clocks and the processor clocks
0 = Processor clock and peripheral clock ratio is forced to 1:1

bit 10-8 **FRCDIV<2:0>:** Internal Fast RC Oscillator Postscaler bits
111 = FRC divided by 256
110 = FRC divided by 64
101 = FRC divided by 32
100 = FRC divided by 16
011 = FRC divided by 8
010 = FRC divided by 4
001 = FRC divided by 2
000 = FRC divided by 1 (default)

bit 7-6 **Unimplemented:** Read as ‘0’

bit 5-4 **Reserved:** Read as ‘0’

Note 1: The DOZE<2:0> bits can only be written to when the DOZEN bit is clear. If DOZEN = 1, any writes to DOZE<2:0> are ignored.

2: This bit is cleared when the ROI bit is set and an interrupt occurs.

3: The DOZEN bit cannot be set if DOZE<2:0> = 000. If DOZE<2:0> = 000, any attempt by user software to set the DOZEN bit is ignored.

4: PLLPRE<3:0> may be updated while the PLL is operating, but the VCO may overshoot.

© 2017-2018 Microchip Technology Inc.

REGISTER 6-2: CLKDIV: CLOCK DIVIDER REGISTER (MASTER) (CONTINUED)

bit 3-0 **PLLPRE<3:0>:** PLL Phase Detector Input Divider Select bits (also denoted as 'N1', PLL prescaler)[4]

11111 = Reserved
...
1001 = Reserved
1000 = Input divided by 8
0111 = Input divided by 7
0110 = Input divided by 6
0101 = Input divided by 5
0100 = Input divided by 4
0011 = Input divided by 3
0010 = Input divided by 2
0001 = Input divided by 1 (power-on default selection)
0000 = Reserved

Note 1: The DOZE<2:0> bits can only be written to when the DOZEN bit is clear. If DOZEN = 1, any writes to DOZE<2:0> are ignored.

2: This bit is cleared when the ROI bit is set and an interrupt occurs.

3: The DOZEN bit cannot be set if DOZE<2:0> = 000. If DOZE<2:0> = 000, any attempt by user software to set the DOZEN bit is ignored.

4: PLLPRE<3:0> may be updated while the PLL is operating, but the VCO may overshoot.

REGISTER 6-3: PLLFBD: PLL FEEDBACK DIVIDER REGISTER (MASTER)

U-0	U-0	U-0	U-0	r-0	r-0	r-0	r-0
—	—	—	—	—	—	—	—
bit 15							bit 8

R/W-1	R/W-0	R/W-0	R/W-1	R/W-0	R/W-1	R/W-1	R/W-0
PLLFBDIV<7:0>							
bit 7							bit 0

Legend:	r = Reserved bit		
R = Readable bit	W = Writable bit	U = Unimplemented bit, read as ‘0’	
-n = Value at POR	‘1’ = Bit is set	‘0’ = Bit is cleared	x = Bit is unknown

bit 15-12 **Unimplemented:** Read as ‘0’

bit 11-8 **Reserved:** Maintain as ‘0’

bit 7-0 **PLLFBDIV<7:0>:** PLL Feedback Divider bits (also denoted as ‘M’, PLL multiplier)

11111111 = Reserved
...
11001000 = 200 Maximum(1)
...
10010110 = 150 (default)
...
00010000 = 16 Minimum(1)
...
00000010 = Reserved
00000001 = Reserved
00000000 = Reserved

Note 1: The allowed range is 16-200 (decimal). The rest of the values are reserved and should be avoided. The power on the default feedback divider is 150 (decimal) with an 8 MHz FRC input clock. The VCO frequency is 1.2 GHz.

© 2017-2018 Microchip Technology Inc.

REGISTER 6-4: OSCTUN: FRC OSCILLATOR TUNING REGISTER (MASTER)

U-0	U-0	U-0	U-0	U-0	U-0	U-0	U-0
—	—	—	—	—	—	—	—
bit 15							bit 8

U-0	U-0	R/W-0	R/W-0	R/W-0	R/W-0	R/W-0	R/W-0
—	—	TUN<5:0>					
bit 7							bit 0

Legend:			
R = Readable bit	W = Writable bit	U = Unimplemented bit, read as ‘0’	
-n = Value at POR	‘1’ = Bit is set	‘0’ = Bit is cleared	x = Bit is unknown

bit 15-6 **Unimplemented:** Read as ‘0’

bit 5-0 **TUN<5:0>:** FRC Oscillator Tuning bits

011111 = Maximum frequency deviation of 1.74% (MHz)
011110 = Center frequency + 1.693% (MHz)
...
000001 = Center frequency + 0.047% (MHz)
000000 = Center frequency (8.00 MHz nominal)
111111 = Center frequency – 0.047% (MHz)
...
100001 = Center frequency – 1.693% (MHz)
100000 = Minimum frequency deviation of -1.74% (MHz)

REGISTER 6-5: PLLDIV: PLL OUTPUT DIVIDER REGISTER (MASTER)

U-0	U-0	U-0	U-0	U-0	U-0	R/W-0	R/W-0
—	—	—	—	—	—	VCODIV1	VCODIV0
bit 15							bit 8

U-0	R/W-1	R/W-0	R/W-0	U-0	R/W-0	R/W-0	R/W-1
—	POST1DIV2(1,2)	POST1DIV1(1,2)	POST1DIV0(1,2)	—	POST2DIV2(1,2)	POST2DIV1(1,2)	POST2DIV0(1,2)
bit 7							bit 0

Legend:			
R = Readable bit	W = Writable bit	U = Unimplemented bit, read as ‘0’	
-n = Value at POR	‘1’ = Bit is set	‘0’ = Bit is cleared	x = Bit is unknown

bit 15-10 **Unimplemented:** Read as ‘0’

bit 9-8 **VCODIV<1:0>:** PLL VCO Output Divider Select bits
11 = Fvco
10 = Fvco/2
01 = Fvco/3
00 = Fvco/4

bit 7 **Unimplemented:** Read as ‘0’

bit 6-4 **POST1DIV<2:0>:** PLL Output Divider #1 Ratio bits(1,2)
POST1DIV<2:0> can have a valid value, from 1 to 7 (POST1DIVx value should be greater than or equal to the POST2DIVx value). The POST1DIVx divider is designed to operate at higher clock rates than the POST2DIVx divider.

bit 3 **Unimplemented:** Read as ‘0’

bit 2-0 **POST2DIV<2:0>:** PLL Output Divider #2 Ratio bits(1,2)
POST2DIV<2:0> can have a valid value, from 1 to 7 (POST2DIVx value should be less than or equal to the POST1DIVx value). The POST1DIVx divider is designed to operate at higher clock rates than the POST2DIVx divider.

Note 1: The POST1DIVx and POST2DIVx divider values must not be changed while the PLL is operating.
2: The default values for POST1DIVx and POST2DIVx are 4 and 1, respectively, yielding a 150 MHz system source clock.

© 2017-2018 Microchip Technology Inc.

REGISTER 6-6: ACLKCON1: AUXILIARY CLOCK CONTROL REGISTER (MASTER)

R/W-0	R/W-0	U-0	U-0	U-0	U-0	U-0	R/W-0
APLLEN[1]	APLLCK	—	—	—	—	—	FRCSEL
bit 15							bit 8

U-0	U-0	r-0	r-0	R/W-0	R/W-0	R/W-0	R/W-1
—	—	—	—	APLLPRE3	APLLPRE2	APLLPRE1	APLLPRE0
bit 7							bit 0

Legend:	r = Reserved bit		
R = Readable bit	W = Writable bit	U = Unimplemented bit, read as ‘0’	
-n = Value at POR	‘1’ = Bit is set	‘0’ = Bit is cleared	x = Bit is unknown

bit 15 **APLLEN:** Auxiliary PLL Enable/Bypass select bit[1]
`1` = AFPLLO is connected to the APLL post-divider output (bypass disabled)
`0` = AFPLLO is connected to the APLL input clock (bypass enabled)

bit 14 **APLLCK:** APLL Phase-Locked State Status bit
`1` = Auxiliary PLL is in lock
`0` = Auxiliary PLL is not in lock

bit 13-9 **Unimplemented:** Read as ‘`0`’

bit 8 **FRCSEL:** FRC Clock Source Select bit
`1` = FRC is the clock source for APLL
`0` = Primary Oscillator is the clock source for APLL

bit 7-6 **Unimplemented:** Read as ‘`0`’

bit 5-4 **Reserved:** Maintain as ‘`0`’

bit 3-0 **APLLPRE<3:0>:** Auxiliary PLL Phase Detector Input Divider bits
`1111` = Reserved
`...`
`1001` = Reserved
`1000` = Input divided by 8
`0111` = Input divided by 7
`0110` = Input divided by 6
`0101` = Input divided by 5
`0100` = Input divided by 4
`0011` = Input divided by 3
`0010` = Input divided by 2
`0001` = Input divided by 1 (power-on default selection)
`0000` = Reserved

Note 1: Even with the APLLEN bit set, another peripheral must generate a clock request before the APLL will start.

REGISTER 6-7: APLLFBD1: APLL FEEDBACK DIVIDER REGISTER (MASTER)

U-0	U-0	U-0	U-0	r-0	r-0	r-0	r-0
—	—	—	—	—	—	—	—
bit 15							bit 8

R/W-1	R/W-0	R/W-0	R/W-1	R/W-0	R/W-1	R/W-1	R/W-0
APLLFBDIV<7:0>							
bit 7							bit 0

Legend:	r = Reserved bit		
R = Readable bit	W = Writable bit	U = Unimplemented bit, read as ‘0’	
-n = Value at POR	‘1’ = Bit is set	‘0’ = Bit is cleared	x = Bit is unknown

bit 15-12 **Unimplemented:** Read as ‘0’

bit 11-8 **Reserved:** Maintain as ‘0’

bit 7-0 **APLLFBDIV<7:0>:** APLL Feedback Divider bits

11111111 = Reserved
...
11001000 = 200 maximum(1)
...
10010110 = 150 (default)
...
00010000 = 16 minimum(1)
...
00000010 = Reserved
00000001 = Reserved
00000000 = Reserved

Note 1: The allowed range is 16-200 (decimal). The rest of the values are reserved and should be avoided. The power-on default feedback divider is 150 (decimal) with an 8 MHz FRC input clock; the VCO frequency is 1.2 GHz.

© 2017-2018 Microchip Technology Inc.

REGISTER 6-8: APLLDIV1: APLL OUTPUT DIVIDER REGISTER (MASTER)

U-0	U-0	U-0	U-0	U-0	U-0	R/W-0	R/W-0
—	—	—	—	—	—	AVCODIV<1:0>	
bit 15							bit 8

U-0	R/W-1	R/W-0	R/W-0	U-0	R/W-0	R/W-0	R/W-1
—	APOST1DIV<2:0>(1,2)			—	APOST2DIV<2:0>(1,2)		
bit 7							bit 0

Legend:			
R = Readable bit	W = Writable bit	U = Unimplemented bit, read as ‘0’	
-n = Value at POR	‘1’ = Bit is set	‘0’ = Bit is cleared	x = Bit is unknown

bit 15-10 **Unimplemented:** Read as ‘0’

bit 9-8 **AVCODIV<1:0>:** APLL VCO Output Divider Select bits

11 = AFVCO
10 = AFVCO/2
01 = AFVCO/3
00 = AFVCO/4

bit 7 **Unimplemented:** Read as ‘0’

bit 6-4 **APOST1DIV<2:0>:** APLL Output Divider #1 Ratio bits(1,2)

APOST1DIV<2:0> can have a valid value, from 1 to 7 (the APOST1DIVx value should be greater than or equal to the APOST2DIVx value). The APOST1DIVx divider is designed to operate at higher clock rates than the APOST2DIVx divider.

bit 3 **Unimplemented:** Read as ‘0’

bit 2-0 **APOST2DIV<2:0>:** APLL Output Divider #2 Ratio bits(1,2)

APOST2DIV<2:0> can have a valid value, from 1 to 7 (the APOST2DIVx value should be less than or equal to the APOST1DIVx value). The APOST1DIVx divider is designed to operate at higher clock rates than the APOST2DIVx divider.

Note 1: The APOST1DIVx and APOST2DIVx values must not be changed while the PLL is operating.

2: The default values for APOST1DIVx and APOST2DIVx are 4 and 1, respectively, yielding a 150 MHz system source clock.

REGISTER 6-9: CANCLKCON: CAN CLOCK CONTROL REGISTER

R/W-0	U-0	U-0	U-0	R/W-0	R/W-0	R/W-0	R/W-0
CANCLKEN	—	—	—	CANCLKSEL<3:0>(1)			
bit 15							bit 8

U-0	R/W-0	R/W-0	R/W-0	R/W-0	R/W-0	R/W-0	R/W-0
—	CANCLKDIV<6:0>(2,3)						
bit 7							bit 0

Legend:			
R = Readable bit	W = Writable bit	U = Unimplemented bit, read as ‘0’	
-n = Value at POR	‘1’ = Bit is set	‘0’ = Bit is cleared	x = Bit is unknown

bit 15 **CANCLKEN:** Enables the CAN Clock Generator bit
`1` = CAN clock generation circuitry is enabled
`0` = CAN clock generation circuitry is disabled

bit 14-12 **Unimplemented:** Read as ‘`0`’

bit 11-8 **CANCLKSEL<3:0>:** CAN Clock Source Select bits(1)
`1011-1111` = Reserved (no clock selected)
`1010` = $AF_{VCO}/4$
`1001` = $AF_{VCO}/3$
`1000` = $AF_{VCO}/2$
`0111` = AF_{VCO}
`0110` = AF_{PLLO}
`0101` = $F_{VCO}/4$
`0100` = $F_{VCO}/3$
`0011` = $F_{VCO}/2$
`0010` = F_{PLLO}
`0001` = F_{VCO}
`0000` = 0 (no clock selected)

bit 7 **Unimplemented:** Read as ‘`0`’

bit 6-0 **CANCLKDIV<6:0>:** CAN Clock Divider Select bits(2,3)
`1111111` = Divide-by-128
`...`
`0000010` = Divide-by-3
`0000001` = Divide-by-2
`0000000` = Divide-by-1

Note 1: The user must ensure the input clock source is 640 MHz or less. Operation with input reference frequency above 640 MHz will result in unpredictable behavior.
2: The CANCLKDIVx divider value must not be changed during CAN module operation.
3: The user must ensure the maximum clock output frequency of the divider is 80 MHz or less.

© 2017-2018 Microchip Technology Inc.

REGISTER 6-10: REFOCONL: REFERENCE CLOCK CONTROL LOW REGISTER (MASTER)

R/W-0	U-0	R/W-0	R/W-0	R/W-0	U-0	HC/R/W-0	HSC/R-0
ROEN	—	ROSIDL	ROOUT	ROSLP	—	ROSWEN	ROACTIV
bit 15							bit 8

U-0	U-0	U-0	U-0	R/W-0	R/W-0	R/W-0	R/W-0
—	—	—	—	ROSEL3	ROSEL2	ROSEL1	ROSEL0
bit 7							bit 0

Legend:	HC = Hardware Clearable bit	HSC = Hardware Settable/Clearable bit	
R = Readable bit	W = Writable bit	U = Unimplemented bit, read as ‘0’	
-n = Value at POR	‘1’ = Bit is set	‘0’ = Bit is cleared	x = Bit is unknown

bit 15 **ROEN:** Reference Clock Enable bit
1 = Reference Oscillator is enabled on the REFCLKO pin
0 = Reference Oscillator is disabled

bit 14 **Unimplemented:** Read as ‘0’

bit 13 **ROSIDL:** Reference Clock Stop in Idle bit
1 = Reference Oscillator continues to run in Idle mode
0 = Reference Oscillator is disabled in Idle mode

bit 12 **ROOUT:** Reference Clock Output Enable bit
1 = Reference clock external output is enabled and available on the REFCLKO pin
0 = Reference clock external output is disabled

bit 11 **ROSLP:** Reference Clock Stop in Sleep bit
1 = Reference Oscillator continues to run in Sleep modes
0 = Reference Oscillator is disabled in Sleep modes

bit 10 **Unimplemented:** Read as ‘0’

bit 9 **ROSWEN:** Reference Clock Output Enable bit
1 = Clock divider change (requested by changes to RODIVx) is requested or is in progress (set in software, cleared by hardware upon completion)
0 = Clock divider change has completed or is not pending

bit 8 **ROACTIV:** Reference Clock Status bit
1 = Reference clock is active; do not change clock source
0 = Reference clock is stopped; clock source and configuration may be safely changed

bit 7-4 **Unimplemented:** Read as ‘0’

bit 3-0 **ROSEL<3:0>:** Reference Clock Source Select bits
1111 = Reserved
... = Reserved
1000 = Reserved
0111 = REFI pin
0110 = $F_{VCO}/4$
0101 = BFRC
0100 = LPRC
0011 = FRC
0010 = Primary Oscillator
0001 = Peripheral clock (F_P)
0000 = System clock (F_{OSC})

REGISTER 6-11: REFOCONH: REFERENCE CLOCK CONTROL HIGH REGISTER (MASTER)

U-0	R/W-0	R/W-0	R/W-0	R/W-0	R/W-0	R/W-0	R/W-0
—	RODIV<14:8>						
bit 15							bit 8

R/W-0	R/W-0	R/W-0	R/W-0	R/W-0	R/W-0	R/W-0	R/W-0
RODIV<7:0>							
bit 7							bit 0

Legend:			
R = Readable bit	W = Writable bit	U = Unimplemented bit, read as ‘0’	
-n = Value at POR	‘1’ = Bit is set	‘0’ = Bit is cleared	x = Bit is unknown

bit 15 **Unimplemented:** Read as ‘0’

bit 14-0 **RODIV<14:0>:** Reference Clock Integer Divider Select bits

Divider for the selected input clock source is two times the selected value.

```
111 1111 1111 1111 = Base clock value divided by 65,534 (2 * 7FFFh)
111 1111 1111 1110 = Base clock value divided by 65,532 (2 * 7FFEh)
111 1111 1111 1101 = Base clock value divided by 65,530 (2 * 7FFDh)
...
000 0000 0000 0010 = Base clock value divided by 4 (2 * 2)
000 0000 0000 0001 = Base clock value divided by 2 (2 * 1)
000 0000 0000 0000 = Base clock value
```


© 2017-2018 Microchip Technology Inc.

6.5 Slave Special Function Registers

These Special Function Registers provide run-time control and status of the Slave core's oscillator system.

6.5.1 SLAVE OSCILLATOR CONTROL REGISTERS

REGISTER 6-12: OSCCON: OSCILLATOR CONTROL REGISTER (SLAVE)(1)

U-0	R-0	R-0	R-0	U-0	R/W-y	R/W-y	R/W-y
—	COSC2	COSC1	COSC0	—	NOSC2(2)	NOSC1(2)	NOSC0(2)
bit 15							bit 8

R/W-0	U-0	R-0	U-0	R/W-0	U-0	U-0	R/W-0
CLKLOCK	—	LOCK	—	CF(3)	—	—	OSWEN
bit 7							bit 0

Legend:	y = Value Set from Configuration bits on POR		
R = Readable bit	W = Writable bit	U = Unimplemented bit, read as '0'	
-n = Value at POR	'1' = Bit is set	'0' = Bit is cleared	x = Bit is unknown

bit 15 **Unimplemented:** Read as '0'

bit 14-12 **COSC<2:0>:** Current Oscillator Selection bits (read-only)
111 = Fast RC Oscillator (FRC) with Divide-by-n (FRCDIVN)
110 = Backup FRC (BFRC)
101 = Low-Power RC Oscillator (LPRC)
100 = Reserved
011 = Primary Oscillator (XT, HS, EC) with PLL (XTPLL, HSPLL, ECPLL)
010 = Primary Oscillator (XT, HS, EC)
001 = Fast RC Oscillator (FRC) with PLL (FRCPLL)
000 = Fast RC Oscillator (FRC)

bit 11 **Unimplemented:** Read as '0'

bit 10-8 **NOSC<2:0>:** New Oscillator Selection bits(2)
111 = Fast RC Oscillator (FRC) with Divide-by-n (FRCDIVN)
110 = Backup FRC (BFRC)
101 = Low-Power RC Oscillator (LPRC)
100 = Reserved
011 = Primary Oscillator (XT, HS, EC) with PLL (XTPLL, HSPLL, ECPLL)
010 = Primary Oscillator (XT, HS, EC)
001 = Fast RC Oscillator (FRC) with PLL (FRCPLL)
000 = Fast RC Oscillator (FRC)

bit 7 **CLKLOCK:** Clock Lock Enable bit
1 = If (FCKSM0 = 1), then clock and PLL configurations are locked; if (FCKSM0 = 0), then clock and PLL configurations may be modified
0 = Clock and PLL selections are not locked, configurations may be modified

bit 6 **Unimplemented:** Read as '0'

Note 1: Writes to this register require an unlock sequence.
2: Direct clock switches between any Primary Oscillator mode with PLL and FRCPLL mode are not permitted. This applies to clock switches in either direction. In these instances, the application must switch to FRC mode as a transitional clock source between the two PLL modes.
3: This bit should only be cleared in software. Setting the bit in software (= 1) will have the same effect as an actual oscillator failure and will trigger an oscillator failure trap.

REGISTER 6-12: OSCCON: OSCILLATOR CONTROL REGISTER (SLAVE)(1) (CONTINUED)

bit 5	**LOCK:** PLL Lock Status bit (read-only) 1 = Indicates that PLL is in lock or PLL start-up timer is satisfied 0 = Indicates that PLL is out of lock, start-up timer is in progress or PLL is disabled
bit 4	**Unimplemented:** Read as '0'
bit 3	**CF:** Clock Fail Detect bit(3) 1 = FSCM has detected a clock failure 0 = FSCM has not detected a clock failure
bit 2-1	**Unimplemented:** Read as '0'
bit 0	**OSWEN:** Oscillator Switch Enable bit 1 = Requests oscillator switch to the selection specified by the NOSC<2:0> bits 0 = Oscillator switch is complete

Note 1: Writes to this register require an unlock sequence.

2: Direct clock switches between any Primary Oscillator mode with PLL and FRCPLL mode are not permitted. This applies to clock switches in either direction. In these instances, the application must switch to FRC mode as a transitional clock source between the two PLL modes.

3: This bit should only be cleared in software. Setting the bit in software (= 1) will have the same effect as an actual oscillator failure and will trigger an oscillator failure trap.

© 2017-2018 Microchip Technology Inc.

REGISTER 6-13: CLKDIV: CLOCK DIVIDER REGISTER (SLAVE)

R/W-0	R/W-0	R/W-1	R/W-1	R/W-0	R/W-0	R/W-0	R/W-0
ROI	DOZE2(1)	DOZE1(1)	DOZE0(1)	DOZEN(2,3)	FRCDIV2	FRCDIV1	FRCDIV0
bit 15							bit 8

U-0	U-0	r-0	r-0	R/W-0	R/W-0	R/W-0	R/W-0
—	—	—	—	PLLPRE3(4)	PLLPRE2(4)	PLLPRE1(4)	PLLPRE0(4)
bit 7							bit 0

Legend:	r = Reserved bit		
R = Readable bit	W = Writable bit	U = Unimplemented bit, read as ‘0’	
-n = Value at POR	‘1’ = Bit is set	‘0’ = Bit is cleared	x = Bit is unknown

bit 15 **ROI:** Recover on Interrupt bit
1 = Interrupts will clear the DOZEN bit and the processor clock, and the peripheral clock ratio is set to 1:1
0 = Interrupts have no effect on the DOZEN bit

bit 14-12 **DOZE<2:0>:** Processor Clock Reduction Select bits(1)
111 = FP divided by 128
110 = FP divided by 64
101 = FP divided by 32
100 = FP divided by 16
011 = FP divided by 8 (default)
010 = FP divided by 4
001 = FP divided by 2
000 = FP divided by 1

bit 11 **DOZEN:** Doze Mode Enable bit(2,3)
1 = DOZE<2:0> field specifies the ratio between the peripheral clocks and the processor clocks
0 = Processor clock and peripheral clock ratio is forced to 1:1

bit 10-8 **FRCDIV<2:0>:** Internal Fast RC Oscillator Postscaler bits
111 = FRC divided by 256
110 = FRC divided by 64
101 = FRC divided by 32
100 = FRC divided by 16
011 = FRC divided by 8
010 = FRC divided by 4
001 = FRC divided by 2
000 = FRC divided by 1 (default)

bit 7-6 **Unimplemented:** Read as ‘0’

bit 5-4 **Reserved:** Read as ‘0’

Note 1: The DOZE<2:0> bits can only be written to when the DOZEN bit is clear. If DOZEN = 1, any writes to DOZE<2:0> are ignored.

2: This bit is cleared when the ROI bit is set and an interrupt occurs.

3: The DOZEN bit cannot be set if DOZE<2:0> = 000. If DOZE<2:0> = 000, any attempt by user software to set the DOZEN bit is ignored.

4: PLLPRE<3:0> may be updated while the PLL is operating, but the VCO may overshoot.

REGISTER 6-13: CLKDIV: CLOCK DIVIDER REGISTER (SLAVE) (CONTINUED)

bit 3-0 **PLLPRE<3:0>:** PLL Phase Detector Input Divider Select bits (also denoted as 'N1', PLL prescaler)(4)

11111 = Reserved
...
1001 = Reserved
1000 = Input divided by 8
0111 = Input divided by 7
0110 = Input divided by 6
0101 = Input divided by 5
0100 = Input divided by 4
0011 = Input divided by 3
0010 = Input divided by 2
0001 = Input divided by 1 (power-on default selection)
0000 = Reserved

Note 1: The DOZE<2:0> bits can only be written to when the DOZEN bit is clear. If DOZEN = 1, any writes to DOZE<2:0> are ignored.

2: This bit is cleared when the ROI bit is set and an interrupt occurs.

3: The DOZEN bit cannot be set if DOZE<2:0> = 000. If DOZE<2:0> = 000, any attempt by user software to set the DOZEN bit is ignored.

4: PLLPRE<3:0> may be updated while the PLL is operating, but the VCO may overshoot.

© 2017-2018 Microchip Technology Inc.

REGISTER 6-14: PLLFBD: PLL FEEDBACK DIVIDER REGISTER (SLAVE)

U-0	U-0	U-0	U-0	r-0	r-0	r-0	r-0
—	—	—	—	—	—	—	—
bit 15							bit 8

R/W-1	R/W-0	R/W-0	R/W-1	R/W-0	R/W-1	R/W-1	R/W-0
PLLFBDIV<7:0>							
bit 7							bit 0

Legend:	r = Reserved bit		
R = Readable bit	W = Writable bit	U = Unimplemented bit, read as ‘0’	
-n = Value at POR	‘1’ = Bit is set	‘0’ = Bit is cleared	x = Bit is unknown

bit 15-12 **Unimplemented:** Read as ‘0’

bit 11-8 **Reserved:** Maintain as ‘0’

bit 7-0 **PLLFBDIV<7:0>:** PLL Feedback Divider bits (also denoted as ‘M’, PLL multiplier)

`11111111` = Reserved
`...`
`11001000` = 200 maximum(1)
`...`
`10010110` = 150 (default)
`...`
`00010000` = 16 minimum(1)
`...`
`00000010` = Reserved
`00000001` = Reserved
`00000000` = Reserved

Note 1: The allowed range is 16-200 (decimal). The rest of the values are reserved and should be avoided. The power on the default feedback divider is 150 (decimal) with an 8 MHz FRC input clock. The VCO frequency is 1.2 GHz.

REGISTER 6-15: PLLDIV: PLL OUTPUT DIVIDER REGISTER (SLAVE)

U-0	U-0	U-0	U-0	U-0	U-0	R/W-0	R/W-0
—	—	—	—	—	—	VCODIV<1:0>	
bit 15							bit 8

U-0	R/W-1	R/W-0	R/W-0	U-0	R/W-0	R/W-0	R/W-1
—	POST1DIV<2:0>(1,2)			—	POST2DIV<2:0>(1,2)		
bit 7							bit 0

Legend:			
R = Readable bit	W = Writable bit	U = Unimplemented bit, read as ‘0’	
-n = Value at POR	‘1’ = Bit is set	‘0’ = Bit is cleared	x = Bit is unknown

bit 15-10 **Unimplemented:** Read as ‘0’

bit 9-8 **VCODIV<1:0>:** PLL VCO Output Divider Select bits

11 = FVCO
10 = FVCO/2
01 = FVCO/3
00 = FVCO/4

bit 7 **Unimplemented:** Read as ‘0’

bit 6-4 **POST1DIV<2:0>:** PLL Output Divider #1 Ratio bits(1,2)

POST1DIV<2:0> can have a valid value, from 1 to 7 (POST1DIVx value should be greater than or equal to the POST2DIVx value). The POST1DIVx divider is designed to operate at higher clock rates than the POST2DIVx divider.

bit 3 **Unimplemented:** Read as ‘0’

bit 2-0 **POST2DIV<2:0>:** PLL Output Divider #2 Ratio bits(1,2)

POST2DIV<2:0> can have a valid value, from 1 to 7 (POST2DIVx value should be less than or equal to the POST1DIVx value). The POST1DIVx divider is designed to operate at higher clock rates than the POST2DIVx divider.

Note 1: The POST1DIVx and POST2DIVx divider values must not be changed while the PLL is operating.

2: The default values for POST1DIVx and POST2DIVx are 4 and 1, respectively, yielding a 150 MHz system source clock.

© 2017-2018 Microchip Technology Inc.

REGISTER 6-16: ACLKCON1: AUXILIARY CLOCK CONTROL REGISTER (SLAVE)

R/W-0	R/W-0	U-0	U-0	U-0	U-0	U-0	R/W-0
APLLEN(1)	APLLCK	—	—	—	—	—	FRCSEL
bit 15							bit 8

U-0	U-0	r-0	r-0	R/W-0	R/W-0	R/W-0	R/W-0
—	—	—	—	APLLPRE3	APLLPRE2	APLLPRE1	APLLPRE0
bit 7							bit 0

Legend:	r = Reserved bit		
R = Readable bit	W = Writable bit	U = Unimplemented bit, read as ‘0’	
-n = Value at POR	‘1’ = Bit is set	‘0’ = Bit is cleared	x = Bit is unknown

bit 15 **APLLEN:** Auxiliary PLL Enable/Bypass Select bit(1)
`1` = AFPLLO is connected to APLL post-divider output (bypass is disabled)
`0` = AFPLLO is connected to APLL input clock (bypass is enabled)

bit 14 **APLLCK:** APLL Phase-Locked State Status bit
`1` = Auxiliary PLL is in lock
`0` = Auxiliary PLL is not in lock

bit 13-9 **Unimplemented:** Read as ‘`0`’

bit 8 **FRCSEL:** FRC Clock Source Select bit

bit 7-6 **Unimplemented:** Read as ‘`0`’

bit 5-4 **Reserved:** Read as ‘`0`’

bit 3-0 **APLLPRE<3:0>:** Auxiliary PLL Phase Detector Input Divider bits
`111111` = Reserved
`...`
`1001` = Reserved
`1000` = Input divided by 8
`0111` = Input divided by 7
`0110` = Input divided by 6
`0101` = Input divided by 5
`0100` = Input divided by 4
`0011` = Input divided by 3
`0010` = Input divided by 2
`0001` = Input divided by 1 (power-on default selection)
`0000` = Reserved

Note 1: Even with the APLLEN bit set, another peripheral must generate a clock request before the APLL will start.

REGISTER 6-17: APLLFBD1: APLL FEEDBACK DIVIDER REGISTER (SLAVE)

U-0	U-0	U-0	U-0	r-0	r-0	r-0	r-0
—	—	—	—	—	—	—	—
bit 15							bit 8

R/W-1	R/W-0	R/W-0	R/W-1	R/W-0	R/W-1	R/W-1	R/W-0
APLLFBDIV<7:0>							
bit 7							bit 0

Legend:	r = Reserved bit		
R = Readable bit	W = Writable bit	U = Unimplemented bit, read as ‘0’	
-n = Value at POR	‘1’ = Bit is set	‘0’ = Bit is cleared	x = Bit is unknown

bit 15-12 **Unimplemented:** Read as ‘0’

bit 11-8 **Reserved:** Maintain as ‘0’

bit 7-0 **APLLFBDIV<7:0>:** APLL Feedback Divider bits

11111111 = Reserved
. . .
11001000 = 200 maximum[1]
. . .
10010110 = 150 (default)
. . .
00010000 = 16 minimum[1]
. . .
00000010 = Reserved
00000001 = Reserved
00000000 = Reserved

Note 1: The allowed range is 16-200 (decimal). The rest of the values are reserved and should be avoided. The power-on default feedback divider is 150 (decimal) with an 8 MHz FRC input clock; the VCO frequency is 1.2 GHz.

© 2017-2018 Microchip Technology Inc.

REGISTER 6-18: APLLDIV: APLL OUTPUT DIVIDER REGISTER (SLAVE)

U-0	U-0	U-0	U-0	U-0	U-0	R/W-0	R/W-0
—	—	—	—	—	—	AVCODIV<1:0>	
bit 15							bit 8

U-0	R/W-1	R/W-0	R/W-0	U-0	R/W-0	R/W-0	R/W-1
—	APOST1DIV<2:0>(1,2)			—	APOST2DIV<2:0>(1,2)		
bit 7							bit 0

Legend:			
R = Readable bit	W = Writable bit	U = Unimplemented bit, read as ‘0’	
-n = Value at POR	‘1’ = Bit is set	‘0’ = Bit is cleared	x = Bit is unknown

bit 15-10 **Unimplemented:** Read as ‘0’

bit 9-8 **AVCODIV<1:0>:** APLL VCO Output Divider Select bits

11 = AFVCO
10 = AFVCO/2
01 = AFVCO/3
00 = AFVCO/4

bit 7 **Unimplemented:** Read as ‘0’

bit 6-4 **APOST1DIV<2:0>:** APLL Output Divider #1 Ratio bits(1,2)

APOST1DIV<2:0> can have a valid value, from 1 to 7 (APOST1DIVx value should be greater than or equal to the APOST2DIVx value). The APOST1DIVx divider is designed to operate at higher clock rates than the APOST2DIVx divider.

bit 3 **Unimplemented:** Read as ‘0’

bit 2-0 **APOST2DIV<2:0>:** APLL Output Divider #2 Ratio bits(1,2)

APOST2DIV<2:0> can have a valid value, from 1 to 7 (APOST2DIVx value should be less than or equal to the APOST1DIVx value). The APOST1DIVx divider is designed to operate at higher clock rates than the APOST2DIVx divider.

Note 1: The APOST1DIVx and APOST2DIVx divider values must not be changed while the PLL is operating.

2: The default values for APOST1DIVx and APOST2DIVx are 4 and 1, respectively, yielding a 150 MHz system source clock.

REGISTER 6-19: REFOCONL: REFERENCE CLOCK CONTROL LOW REGISTER (SLAVE)

R/W-0	U-0	R/W-0	R/W-0	R/W-0	U-0	HC/R/W-0	HSC/R-0
ROEN	—	ROSIDL	ROOUT	ROSLP	—	ROSWEN	ROACTIV
bit 15							bit 8

U-0	U-0	U-0	U-0	R/W-0	R/W-0	R/W-0	R/W-0
—	—	—	—	ROSEL3	ROSEL2	ROSEL1	ROSEL0
bit 7							bit 0

Legend:	HC = Hardware Clearable bit	HSC = Hardware Settable/Clearable bit	
R = Readable bit	W = Writable bit	U = Unimplemented bit, read as ‘0’	
-n = Value at POR	‘1’ = Bit is set	‘0’ = Bit is cleared	x = Bit is unknown

bit 15 **ROEN:** Reference Clock Enable bit
1 = Reference Oscillator is enabled on the REFCLKO pin
0 = Reference Oscillator is disabled

bit 14 **Unimplemented:** Read as ‘0’

bit 13 **ROSIDL:** Reference Clock Stop in Idle bit
1 = Reference Oscillator is disabled in Idle mode
0 = Reference Oscillator continues to run in Idle mode

bit 12 **ROOUT:** Reference Clock Output Enable bit
1 = Reference clock external output is enabled and available on the REFCLKO pin
0 = Reference clock external output is disabled

bit 11 **ROSLP:** Reference Clock Stop in Sleep bit
1 = Reference Oscillator continues to run in Sleep modes
0 = Reference Oscillator is disabled in Sleep modes

bit 10 **Unimplemented:** Read as ‘0’

bit 9 **ROSWEN:** Reference Clock Output Enable bit
1 = Clock divider change (requested by changes to RODIVx) is requested or is in progress (set in software, cleared by hardware upon completion)
0 = Clock divider change has completed or is not pending

bit 8 **ROACTIV:** Reference Clock Status bit
1 = Reference clock is active; do not change clock source
0 = Reference clock is stopped; clock source and configuration may be safely changed

bit 7-4 **Unimplemented:** Read as ‘0’

bit 3-0 **ROSEL<3:0>:** Reference Clock Source Select bits
1111 =
... = Reserved
1000 = Reserved
0111 = REFI pin
0110 = $F_{VCO}/4$
0101 = BFRC
0100 = LPRC
0011 = FRC
0010 = Primary Oscillator
0001 = Peripheral clock (F_P)
0000 = System clock (F_{OSC})

© 2017-2018 Microchip Technology Inc.

REGISTER 6-20: REFOCONH: REFERENCE CLOCK CONTROL HIGH REGISTER (SLAVE)

U-0	R/W-0	R/W-0	R/W-0	R/W-0	R/W-0	R/W-0	R/W-0
—	RODIV<14:8>						
bit 15							bit 8

R/W-0	R/W-0	R/W-0	R/W-0	R/W-0	R/W-0	R/W-0	R/W-0
RODIV<7:0>							
bit 7							bit 0

Legend:			
R = Readable bit	W = Writable bit	U = Unimplemented bit, read as ‘0’	
-n = Value at POR	‘1’ = Bit is set	‘0’ = Bit is cleared	x = Bit is unknown

bit 15 **Unimplemented:** Read as ‘0’

bit 14-0 **RODIV<14:0>:** Reference Clock Integer Divider Select bits

Divider for the selected input clock source is two times the selected value.

`111 1111 1111 1111` = Base clock value divided by 65,534 (2 * 7FFFh)
`111 1111 1111 1110` = Base clock value divided by 65,532 (2 * 7FFEh)
`111 1111 1111 1101` = Base clock value divided by 65,530 (2 * 7FFDh)
`...`
`000 0000 0000 0010` = Base clock value divided by 4 (2 * 2)
`000 0000 0000 0001` = Base clock value divided by 2 (2 * 1)
`000 0000 0000 0000` = Base clock value

6.6 Primary Oscillator (POSC)

The dsPIC33CH128MP508 family devices contain one instance of the Primary Oscillator (POSC), which is available to both the Master and Slave clock subsystems. The Primary Oscillator is available on the OSCI and OSCO pins of the dsPIC33CH devices. This connection enables an external crystal (or ceramic resonator) to provide the clock to the device. The Primary Oscillator provides three modes of operation:

- Medium Speed Oscillator (XT Mode):
  The XT mode is a Medium Gain, Medium Frequency mode used to work with crystal frequencies of 3.5 MHz to 10 MHz.
- High-Speed Oscillator (HS Mode):
  The HS mode is a High-Gain, High-Frequency mode used to work with crystal frequencies of 10 MHz to 32 MHz.
- External Clock Source Operation (EC Mode):
  If the on-chip oscillator is not used, the EC mode allows the internal oscillator to be bypassed. The device clocks are generated from an external source (0 MHz to up to 64 MHz) and input on the OSCI pin.

Note:	The Primary Oscillator (POSC) is shared between Master and Slave.

6.7 Internal Fast RC (FRC) Oscillator

The dsPIC33CH128MP508 family devices contain one instance of the internal Fast RC (FRC) Oscillator, which is available to both the Master and Slave clock subsystems. The FRC Oscillator provides a nominal 8 MHz clock without requiring an external crystal or ceramic resonator, which results in system cost savings for applications that do not require a precise clock reference.

The application software can tune the frequency of the oscillator using the FRC Oscillator Tuning bits (TUN<5:0>) in the FRC Oscillator Tuning register (OSCTUN<5:0>).

Note:	The FRC is shared between Master and Slave; the OSCTUN register is used to tune the FRC as a part of the Master oscillator configuration.

6.8 Low-Power RC (LPRC) Oscillator

The dsPIC33CH128MP508 family devices contain one instance of the Low-Power RC (LPRC) Oscillator that is available to both the Master and Slave clock subsystems. The LPRC Oscillator provides a nominal clock frequency of 32 kHz and is the clock source for the Power-up Timer (PWRT), Watchdog Timer (WDT) and Fail-Safe Clock Monitor (FSCM) circuits in each core clock subsystem.

The LPRC Oscillator is the clock source for the PWRT, WDT and FSCM in both the Master and Slave cores. The LPRC Oscillator is enabled at power-on.

The LPRC Oscillator remains enabled under these conditions:

- The Master or Slave FSCM is enabled
- The Master or Slave WDT is enabled
- The LPRC Oscillator is selected as the system clock

If none of these conditions is true, the LPRC Oscillator shuts off after the PWRT expires. The LPRC Oscillator is shut off in Sleep mode.

Note:	The LPRC is shared between Master and Slave.

© 2017-2018 Microchip Technology Inc.

Example 6-4 illustrates code for using the PLL (50 MIPS) with the Primary Oscillator.

EXAMPLE 6-4: CODE EXAMPLE FOR USING MASTER PLL (75 MIPS) WITH PRIMARY OSCILLATOR (POSC)

```
//code example for 70 MIPS system clock using POSC with 10 MHz external crystal

// Select Internal FRC at POR
// Select FRC on POR
#pragma config FNOSC = FRC               // Oscillator Source Selection (Internal Fast RC (FRC))
#pragma config IESO = OFF
/// Enable Clock Switching and Configure POSC in XT mode
#pragma config POSCMD = XT
#pragma config FCKSM = CSECMD

int     main()
{
        // Configure PLL prescaler, both PLL postscalers, and PLL feedback divider
        CLKDIVbits.PLLPRE = 1;           // N1=1
        PLLFBDbits.PLLFBDIV = 100;       // M = 100
        PLLDIVbits.POST1DIV = 5;         // N2=5
        PLLDIVbits.POST2DIV = 1;         // N3=1

        // Initiate Clock Switch to Primary Oscillator with PLL (NOSC=0b011)
        __builtin_write_OSCCONH(0x03);
        __builtin_write_OSCCONL(OSCCON | 0x01);

        // Wait for Clock switch to occur
        while (OSCCONbits.OSWEN!= 0);

        // Wait for PLL to lock
        while (OSCCONbits.LOCK!= 1);
}
```

Note: $F_{PLLO} = F_{PLLI} * M/(N1 * N2 * N3)$; $F_{PLLI} = 10$; $M = 150$; $N1 = 1$; $N2 = 5$; $N3 = 1$; so $F_{PLLO} = 10 * 100/(1 * 5 * 1) = 300$ MHz or 75 MIPS.

Example 6-5 illustrates code for using the PLL (60 MIPS) with the Primary Oscillator.

EXAMPLE 6-5: CODE EXAMPLE FOR USING SLAVE PLL (60 MIPS) WITH PRIMARY OSCILLATOR (POSC)

```
//code example for 60 MIPS system clock using POSC with 10 MHz external crystal
// Select Internal FRC at POR
// Select FRC on POR
#pragma config S1FNOSC = FRC             // Oscillator Source Selection (Internal Fast RC (FRC))
#pragma config S1IESO = OFF              // Two-speed Oscillator Start-up Enable bit (Start up
                                            with user-selected oscillator source)
// Enable Clock Switching
#pragma config S1FCKSM = CSECMD

//Configure POSC in XT mode in Master core FOSC configuration register
#pragma config POSCMD = XT

int     main()
{
        // Configure PLL prescaler, both PLL postscalers, and PLL feedback divider
        CLKDIVbits.PLLPRE = 1;           // N1=1
        PLLFBDbits.PLLFBDIV = 120;       // M = 120
        PLLDIVbits.POST1DIV = 5;         // N2=5
        PLLDIVbits.POST2DIV = 1;         // N3=1

        // Initiate Clock Switch to Primary Oscillator with PLL (NOSC=0b011)
        __builtin_write_OSCCONH(0x03);
        __builtin_write_OSCCONL(OSCCON | 0x01);

        // Wait for Clock switch to occur
        while (OSCCONbits.OSWEN!= 0);

        // Wait for PLL to lock
        while (OSCCONbits.LOCK!= 1);
}
```

Note: *$F_{PLLO} = F_{PLLI} * M/(N1 * N2 * N3)$; $F_{PLLI} = 10$; $M = 120$; $N1 = 1$; $N2 = 5$; $N3 = 1$;* so *$F_{PLLO} = 10 * 100/(1 * 5 * 1) = 240$ MHz* or *60 MIPS.*

© 2017-2018 Microchip Technology Inc.

Example 6-6 illustrates code for using the Master PLL with an 8 MHz internal FRC.

EXAMPLE 6-6: CODE EXAMPLE FOR USING MASTER PLL WITH 8 MHz INTERNAL FRC

```
//code example for 50 MIPS system clock using 8MHz FRC

// Select FRC on POR
#pragma config FNOSC = FRC               // Oscillator Source Selection (Internal Fast RC (FRC))
#pragma config IESO = OFF
/// Enable Clock Switching
#pragma config FCKSM = CSECMD

int     main()
{
        // Configure PLL prescaler, both PLL postscalers, and PLL feedback divider
        CLKDIVbits.PLLPRE = 1;           // N1=1
        PLLFBDbits.PLLFBDIV = 125;       // M = 125
        PLLDIVbits.POST1DIV = 5;         // N2=5
        PLLDIVbits.POST2DIV = 1;         // N3=1

        // Initiate Clock Switch to FRC with PLL (NOSC=0b001)
        __builtin_write_OSCCONH(0x01);
        __builtin_write_OSCCONL(OSCCON | 0x01);

        // Wait for Clock switch to occur
        while (OSCCONbits.OSWEN!= 0);

        // Wait for PLL to lock
        while (OSCCONbits.LOCK!= 1);
}
```

Note: $F_{PLLO} = F_{PLLI} * M/(N1 * N2 * N3)$; $F_{PLLI} = 8$; $M = 125$; $N1 = 1$; $N2 = 5$; $N3 = 1$; so $F_{PLLO} = 10 * 100/(1 * 5 * 1) = 200$ MHz or 50 MIPS.

Example 6-7 illustrates code for using the Slave PLL with an 8 MHz internal FRC.

EXAMPLE 6-7: CODE EXAMPLE FOR USING SLAVE PLL WITH 8 MHz INTERNAL FRC

```
//code example for 60 MIPS system clock using 8MHz FRC

// Select FRC on POR
#pragma config S1FNOSC = FRC             // Oscillator Source Selection (Internal Fast RC (FRC))
#pragma config S1IESO = OFF              // Two-speed Oscillator Start-up Enable bit (Start up
                                            with user-selected oscillator source)
// Enable Clock Switching
#pragma config S1FCKSM = CSECMD

int     main()
{
        // Configure PLL prescaler, both PLL postscalers, and PLL feedback divider
        CLKDIVbits.PLLPRE = 1;           // N1=1
        PLLFBDbits.PLLFBDIV = 150;       // M = 150
        PLLDIVbits.POST1DIV = 5;         // N2=5
        PLLDIVbits.POST2DIV = 1;         // N3=1

        // Initiate Clock Switch to FRC with PLL (NOSC=0b001)
        __builtin_write_OSCCONH(0x01);
        __builtin_write_OSCCONL(OSCCON | 0x01);

        // Wait for Clock switch to occur
        while (OSCCONbits.OSWEN!= 0);
        // Wait for PLL to lock
        while (OSCCONbits.LOCK!= 1);
}
```

Note: *F_{PLLO} = F_{PLLI} * M/(N1 * N2 * N3); F_{PLLI} = 8; M = 150; N1 = 1; N2 = 5; N3 = 1;* so *F_{PLLO} = 10 * 100/(1 * 5 * 1) = 240 MHz* or *60 MIPS.*

© 2017-2018 Microchip Technology Inc.

7.0 POWER-SAVING FEATURES (MASTER AND SLAVE)

Note 1: This data sheet summarizes the features of the dsPIC33CH128MP508 family of devices. It is not intended to be a comprehensive reference source. To complement the information in this data sheet, refer to **"Watchdog Timer and Power-Saving Modes"** (DS70615) in the *"dsPIC33/PIC24 Family Reference Manual"*, which is available from the Microchip web site (www.microchip.com). The power saving section is only relevant for this device. The WDT has its own family reference manual section.

2: This chapter is applicable to both the Master core and the Slave core. There are registers associated with PMD that are listed separately for Master and Slave at the end of this section. Other features related to power saving that are discussed are applicable to both the Master and Slave core.

3: All associated register names are the same on the Master core and the Slave core. The Slave code will be developed in a separate project in MPLAB® X IDE with the device selection, dsPIC33CH128MP508**S1**, where **S1** indicates the Slave device.

The dsPIC33CH128MP508 family devices provide the ability to manage power consumption by selectively managing clocking to the CPU and the peripherals. In general, a lower clock frequency and a reduction in the number of peripherals being clocked constitutes lower consumed power.

dsPIC33CH128MP508 family devices can manage power consumption in four ways:

- Clock Frequency
- Instruction-Based Sleep and Idle modes
- Software-Controlled Doze mode
- Selective Peripheral Control in Software

Combinations of these methods can be used to selectively tailor an application's power consumption while still maintaining critical application features, such as timing-sensitive communications.

7.1 Clock Frequency and Clock Switching

The dsPIC33CH128MP508 family devices allow a wide range of clock frequencies to be selected under application control. If the system clock configuration is not locked, users can choose low-power or high-precision oscillators by simply changing the NOSCx bits (OSCCON<10:8>). The process of changing a system clock during operation, as well as limitations to the process, are discussed in more detail in **Section 6.0 "Oscillator with High-Frequency PLL"**.

7.2 Instruction-Based Power-Saving Modes

The dsPIC33CH128MP508 family devices have two special power-saving modes that are entered through the execution of a special `PWRSAV` instruction. Sleep mode stops clock operation and halts all code execution. Idle mode halts the CPU and code execution, but allows peripheral modules to continue operation. The assembler syntax of the `PWRSAV` instruction is shown in Example 7-1.

Note: `SLEEP_MODE` and `IDLE_MODE` are constants defined in the assembler include file for the selected device.

Sleep and Idle modes can be exited as a result of an enabled interrupt, WDT time-out or a device Reset. When the device exits these modes, it is said to "wake-up".

EXAMPLE 7-1: PWRSAV INSTRUCTION SYNTAX

```
PWRSAV  #SLEEP_MODE     ; Put the device into Sleep mode
PWRSAV  #IDLE_MODE      ; Put the device into Idle mode
```

7.2.1 SLEEP MODE

The following occurs in Sleep mode:

- The system clock source is shut down. If an on-chip oscillator is used, it is turned off.
- The device current consumption is reduced to a minimum, provided that no I/O pin is sourcing current.
- The Fail-Safe Clock Monitor does not operate, since the system clock source is disabled.
- The LPRC clock continues to run in Sleep mode if the WDT is enabled.
- The WDT, if enabled, is automatically cleared prior to entering Sleep mode.
- Some device features or peripherals can continue to operate. This includes items such as the Input Change Notification on the I/O ports or peripherals that use an External Clock input.
- Any peripheral that requires the system clock source for its operation is disabled.

The device wakes up from Sleep mode on any of the these events:

- Any interrupt source that is individually enabled
- Any form of device Reset
- A WDT time-out

On wake-up from Sleep mode, the processor restarts with the same clock source that was active when Sleep mode was entered.

For optimal power savings, the internal regulator and the Flash regulator can be configured to go into stand-by when Sleep mode is entered by clearing the VREGS (RCON<8>) bit.

7.2.2 IDLE MODE

The following occurs in Idle mode:

- The CPU stops executing instructions.
- The WDT is automatically cleared.
- The system clock source remains active. By default, all peripheral modules continue to operate normally from the system clock source, but can also be selectively disabled (see **Section 7.4 “Peripheral Module Disable”**).
- If the WDT or FSCM is enabled, the LPRC also remains active.

The device wakes from Idle mode on any of these events:

- Any interrupt that is individually enabled
- Any device Reset
- A WDT time-out

On wake-up from Idle mode, the clock is reapplied to the CPU and instruction execution will begin (2-4 clock cycles later), starting with the instruction following the `PWRSAV` instruction or the first instruction in the ISR.

All peripherals also have the option to discontinue operation when Idle mode is entered to allow for increased power savings. This option is selectable in the control register of each peripheral; for example, the SIDL bit in the Timer1 Control register (T1CON<13>).

7.2.3 INTERRUPTS COINCIDENT WITH POWER SAVE INSTRUCTIONS

Any interrupt that coincides with the execution of a `PWRSAV` instruction is held off until entry into Sleep or Idle mode has completed. The device then wakes up from Sleep or Idle mode.

© 2017-2018 Microchip Technology Inc.

7.3 Doze Mode

The preferred strategies for reducing power consumption are changing clock speed and invoking one of the power-saving modes. In some circumstances, this cannot be practical. For example, it may be necessary for an application to maintain uninterrupted synchronous communication, even while it is doing nothing else. Reducing system clock speed can introduce communication errors, while using a power-saving mode can stop communications completely.

Doze mode is a simple and effective alternative method to reduce power consumption while the device is still executing code. In this mode, the system clock continues to operate from the same source and at the same speed. Peripheral modules continue to be clocked at the same speed, while the CPU clock speed is reduced. Synchronization between the two clock domains is maintained, allowing the peripherals to access the SFRs while the CPU executes code at a slower rate.

Doze mode is enabled by setting the DOZEN bit (CLKDIV<11>). The ratio between peripheral and core clock speed is determined by the DOZE<2:0> bits (CLKDIV<14:12>). There are eight possible configurations, from 1:1 to 1:128, with 1:1 being the default setting.

Programs can use Doze mode to selectively reduce power consumption in event-driven applications. This allows clock-sensitive functions, such as synchronous communications, to continue without interruption while the CPU Idles, waiting for something to invoke an interrupt routine. An automatic return to full-speed CPU operation on interrupts can be enabled by setting the ROI bit (CLKDIV<15>). By default, interrupt events have no effect on Doze mode operation.

7.4 Peripheral Module Disable

The Peripheral Module Disable (PMD) registers provide a method to disable a peripheral module by stopping all clock sources supplied to that module. When a peripheral is disabled using the appropriate PMD control bit, the peripheral is in a minimum power consumption state. The control and status registers associated with the peripheral are also disabled, so writes to those registers do not have any effect and read values are invalid.

A peripheral module is enabled only if both the associated bit in the PMD register is cleared and the peripheral is supported by the specific dsPIC® DSC variant. If the peripheral is present in the device, it is enabled in the PMD register by default.

Note 1: If a PMD bit is set, the corresponding module is disabled after a delay of one instruction cycle. Similarly, if a PMD bit is cleared, the corresponding module is enabled after a delay of one instruction cycle (assuming the module control registers are already configured to enable module operation).

2: The PMD bits are different for the Master core and Slave core. The Master has its own PMD bits which can be disabled/enabled independently of the Slave peripherals. The Slave has its own PMD bits which can be disabled/enabled independently of the Master peripherals. The register names are the same for the Master and the Slave, but the PMD registers have different addresses in the Master and Slave SFR.

7.5 Power-Saving Resources

Many useful resources are provided on the main product page of the Microchip web site for the devices listed in this data sheet. This product page contains the latest updates and additional information.

7.5.1 KEY RESOURCES

- **"Watchdog Timer and Power-Saving Modes"** (DS70615) in the *"dsPIC33/PIC24 Family Reference Manual"*
- Code Samples
- Application Notes
- Software Libraries
- Webinars
- All related *"dsPIC33/PIC24 Family Reference Manual"* Sections
- Development Tools

TABLE 7-1: MASTER AND SLAVE PMD REGISTERS

Master PMD Registers		Slave PMD Registers	
SFR Addresses	**Register**	**SFR Addresses**	**Register**
FA0h	PMDCONL	FA0h	PMDCONL
FA4h	PMD1	FA4h	PMD1
FA6h	PMD2	FA6h	PMD2
FA8h	PMD3	FA8h	—
FAAh	PMD4	FAAh	PMD4
FACh	—	FACh	—
FAEh	PMD6	FAEh	PMD6
FB0h	PMD7	FB0h	PMD7
FB2h	PMD8	FB2h	PMD8

7.6 PMD Control Registers

REGISTER 7-1: PMDCONL: MASTER PMD CONTROL REGISTER LOW

U-0	U-0	U-0	U-0	R/W-0	U-0	U-0	U-0
—	—	—	—	PMDLOCK	—	—	
bit 15							bit 8

U-0	U-0	U-0	U-0	U-0	U-0	U-0	U-0
—	—	—	—	—	—	—	—
bit 7							bit 0

Legend:			
R = Readable bit	W = Writable bit	U = Unimplemented bit, read as ‘0’	
-n = Value at POR	‘1’ = Bit is set	‘0’ = Bit is cleared	x = Bit is unknown

bit 15-12 **Unimplemented:** Read as ‘0’

bit 11 **PMDLOCK:** PMD Lock bit
1 = PMD bits can be written
0 = PMD bits are not allowed to be written

bit 10-0 **Unimplemented:** Read as ‘0’

© 2017-2018 Microchip Technology Inc.

REGISTER 7-2: PMD1: MASTER PERIPHERAL MODULE DISABLE 1 CONTROL REGISTER LOW

U-0	U-0	U-0	U-0	R/W-0	R/W-0	R/W-0	U-0
—	—	—	—	T1MD	QEIMD	PWMMD	—
bit 15							bit 8

R/W-0	R/W-0	R/W-0	R/W-0	R/W-0	U-0	R/W-0	R/W-0
I2C1MD	U2MD	U1MD	SPI2MD	SPI1MD	—	C1MD	ADC1MD
bit 7							bit 0

Legend:			
R = Readable bit	W = Writable bit	U = Unimplemented bit, read as ‘0’	
-n = Value at POR	‘1’ = Bit is set	‘0’ = Bit is cleared	x = Bit is unknown

bit 15-12 **Unimplemented:** Read as ‘0’

bit 11 **T1MD:** Timer1 Module Disable bit
1 = Timer1 module is disabled
0 = Timer1 module is enabled

bit 10 **QEIMD:** QEI Module Disable bit
1 = QEI module is disabled
0 = QEI module is enabled

bit 9 **PWMMD:** PWM Module Disable bit
1 = PWM module is disabled
0 = PWM module is enabled

bit 8 **Unimplemented:** Read as ‘0’

bit 7 **I2C1MD:** I2C1 Module Disable bit
1 = I2C1 module is disabled
0 = I2C1 module is enabled

bit 6 **U2MD:** UART2 Module Disable bit
1 = UART2 module is disabled
0 = UART2 module is enabled

bit 5 **U1MD:** UART1 Module Disable bit
1 = UART1 module is disabled
0 = UART1 module is enabled

bit 4 **SPI2MD:** SPI2 Module Disable bit
1 = SPI2 module is disabled
0 = SPI2 module is enabled

bit 3 **SPI1MD:** SPI1 Module Disable bit
1 = SPI1 module is disabled
0 = SPI1 module is enabled

bit 2 **Unimplemented:** Read as ‘0’

bit 1 **C1MD:** CAN1 Module Disable bit
1 = CAN1 module is disabled
0 = CAN1 module is enabled

bit 0 **ADC1MD:** ADC Module Disable bit
1 = ADC module is disabled
0 = ADC module is enabled

REGISTER 7-3: PMD2: MASTER PERIPHERAL MODULE DISABLE 2 CONTROL REGISTER HIGH

U-0	U-0	U-0	U-0	U-0	U-0	U-0	U-0
—	—	—	—	—	—	—	—
bit 15							bit 8

R/W-0	R/W-0	R/W-0	R/W-0	R/W-0	R/W-0	R/W-0	R/W-0
CCP8MD	CCP7MD	CCP6MD	CCP5MD	CCP4MD	CCP3MD	CCP2MD	CCP1MD
bit 7							bit 0

Legend:			
R = Readable bit	W = Writable bit	U = Unimplemented bit, read as ‘0’	
-n = Value at POR	‘1’ = Bit is set	‘0’ = Bit is cleared	x = Bit is unknown

bit 15-8 **Unimplemented:** Read as ‘0’

bit 7 **CCP8MD:** SCCP8 Module Disable bit
1 = SCCP8 module is disabled
0 = SCCP8 module is enabled

bit 6 **CCP7MD:** SCCP7 Module Disable bit
1 = SCCP7 module is disabled
0 = SCCP7 module is enabled

bit 5 **CCP6MD:** SCCP6 Module Disable bit
1 = SCCP6 module is disabled
0 = SCCP6 module is enabled

bit 4 **CCP5MD:** SCCP5 Module Disable bit
1 = SCCP5 module is disabled
0 = SCCP5 module is enabled

bit 3 **CCP4MD:** SCCP4 Module Disable bit
1 = SCCP4 module is disabled
0 = SCCP4 module is enabled

bit 2 **CCP3MD:** SCCP3 Module Disable bit
1 = SCCP3 module is disabled
0 = SCCP3 module is enabled

bit 1 **CCP2MD:** SCCP2 Module Disable bit
1 = SCCP2 module is disabled
0 = SCCP2 module is enabled

bit 0 **CCP1MD:** SCCP1 Module Disable bit
1 = SCCP1 module is disabled
0 = SCCP1 module is enabled

© 2017-2018 Microchip Technology Inc.

REGISTER 7-4: PMD3: MASTER PERIPHERAL MODULE DISABLE 3 CONTROL REGISTER LOW(1)

U-0	U-0	U-0	U-0	U-0	U-0	U-0	U-0
—	—	—	—	—	—	—	
bit 15							bit 8

R/W-0	U-0	U-0	U-0	U-0	U-0	R/W-0	U-0
CRCMD	—	—	—	—	—	I2C2MD	—
bit 7							bit 0

Legend:			
R = Readable bit	W = Writable bit	U = Unimplemented bit, read as ‘0’	
-n = Value at POR	‘1’ = Bit is set	‘0’ = Bit is cleared	x = Bit is unknown

bit 15-8 **Unimplemented:** Read as ‘0’

bit 7 **CRCMD:** CRC Module Disable bit
1 = CRC module is disabled
0 = CRC module is enabled

bit 6-2 **Unimplemented:** Read as ‘0’

bit 1 **I2C2MD:** I2C2 Module Disable bit
1 = I2C2 module is disabled
0 = I2C2 module is enabled

bit 0 **Unimplemented:** Read as ‘0’

Note 1: This register is only available in the Master core.

REGISTER 7-5: PMD4: MASTER PERIPHERAL MODULE DISABLE 4 CONTROL REGISTER

U-0	U-0	U-0	U-0	U-0	U-0	U-0	U-0
—	—	—	—	—	—	—	
bit 15							bit 8

U-0	U-0	U-0	U-0	R/W-0	U-0	U-0	U-0
—	—	—	—	REFOMD	—	—	—
bit 7							bit 0

Legend:			
R = Readable bit	W = Writable bit	U = Unimplemented bit, read as ‘0’	
-n = Value at POR	‘1’ = Bit is set	‘0’ = Bit is cleared	x = Bit is unknown

bit 15-4 **Unimplemented:** Read as ‘0’

bit 3 **REFOMD:** Reference Clock Module Disable bit
1 = Reference clock module is disabled
0 = Reference clock module is enabled

bit 2-0 **Unimplemented:** Read as ‘0’

© 2017-2018 Microchip Technology Inc.

REGISTER 7-6: PMD6: MASTER PERIPHERAL MODULE DISABLE 6 CONTROL REGISTER HIGH

U-0	U-0	R/W-0	R/W-0	R/W-0	R/W-0	R/W-0	R/W-0
—	—	DMA5MD	DMA4MD	DMA3MD	DMA2MD	DMA1MD	DMA0MD
bit 15							bit 8

U-0	U-0	U-0	U-0	U-0	U-0	U-0	U-0
—	—	—	—	—	—	—	—
bit 7							bit 0

Legend:			
R = Readable bit	W = Writable bit	U = Unimplemented bit, read as ‘0’	
-n = Value at POR	‘1’ = Bit is set	‘0’ = Bit is cleared	x = Bit is unknown

bit 15-14 **Unimplemented:** Read as ‘0’

bit 13 **DMA5MD:** DMA5 Module Disable bit
1 = DMA5 module is disabled
0 = DMA5 module is enabled

bit 12 **DMA4MD:** DMA4 Module Disable bit
1 = DMA4 module is disabled
0 = DMA4 module is enabled

bit 11 **DMA3MD:** DMA3 Module Disable bit
1 = DMA3 module is disabled
0 = DMA3 module is enabled

bit 10 **DMA2MD:** DMA2 Module Disable bit
1 = DMA2 module is disabled
0 = DMA2 module is enabled

bit 9 **DMA1MD:** DMA1 Module Disable bit
1 = DMA1 module is disabled
0 = DMA1 module is enabled

bit 8 **DMA0MD:** DMA0 Module Disable bit
1 = DMA0 module is disabled
0 = DMA0 module is enabled

bit 7-0 **Unimplemented:** Read as ‘0’

REGISTER 7-7: PMD7: MASTER PERIPHERAL MODULE DISABLE 7 CONTROL REGISTER LOW

U-0	U-0	U-0	U-0	U-0	U-0	U-0	R/W-0
—	—	—	—	—	—	—	CMP1MD
bit 15							bit 8

U-0	U-0	U-0	U-0	R/W-0	U-0	U-0	U-0
—	—	—	—	PTGMD	—	—	—
bit 7							bit 0

Legend:			
R = Readable bit	W = Writable bit	U = Unimplemented bit, read as ‘0’	
-n = Value at POR	‘1’ = Bit is set	‘0’ = Bit is cleared	x = Bit is unknown

bit 15-9 **Unimplemented:** Read as ‘0’

bit 8 **CMP1MD:** Comparator 1 Module Disable bit
1 = Comparator 1 module is disabled
0 = Comparator 1 module is enabled

bit 7-4 **Unimplemented:** Read as ‘0’

bit 3 **PTGMD**: PTG Module Disable bit
1 = PTG module is disabled
0 = PTG module is enabled

bit 2-0 **Unimplemented:** Read as ‘0’

© 2017-2018 Microchip Technology Inc.

REGISTER 7-8: PMD8: MASTER PERIPHERAL MODULE DISABLE 8 CONTROL REGISTER(1)

U-0	U-0	U-0	R/W-0	R/W-0	U-0	U-0	U-0
—	—	—	SENT2MD	SENT1MD	—	—	—
bit 15							bit 8

U-0	U-0	R/W-0	R/W-0	R/W-0	R/W-0	R/W-0	U-0
—	—	CLC4MD	CLC3MD	CLC2MD	CLC1MD	BIASMD	—
bit 7							bit 0

Legend:			
R = Readable bit	W = Writable bit	U = Unimplemented bit, read as ‘0’	
-n = Value at POR	‘1’ = Bit is set	‘0’ = Bit is cleared	x = Bit is unknown

bit 15-13 **Unimplemented:** Read as ‘0’

bit 12 **SENT2MD:** SENT2 Module Disable bit
1 = SENT2 module is disabled
0 = SENT2 module is enabled

bit 11 **SENT1MD:** SENT1 Module Disable bit
1 = SENT1 module is disabled
0 = SENT1 module is enabled

bit 10-6 **Unimplemented:** Read as ‘0’

bit 5 **CLC4MD:** CLC4 Module Disable bit
1 = CLC4 module is disabled
0 = CLC4 module is enabled

bit 4 **CLC3MD**: CLC3 Module Disable bit
1 = CLC3 module is disabled
0 = CLC3 module is enabled

bit 3 **CLC2MD:** CLC2 Module Disable bit
1 = CLC2 module is disabled
0 = CLC2 module is enabled

bit 2 **CLC1MD:** CLC1 Module Disable bit
1 = CLC1 module is disabled
0 = CLC1 module is enabled

bit 1 **BIASMD:** Constant-Current Source Module Disable bit
1 = Constant-current source module is disabled
0 = Constant-current source module is enabled

bit 0 **Unimplemented:** Read as ‘0’

Note 1: This register is only available in the Master core.

REGISTER 7-9: PMDCON: SLAVE PMD CONTROL REGISTER

U-0	U-0	U-0	U-0	R/W-0	U-0	U-0	U-0
—	—	—	—	PMDLOCK	—	—	—
bit 15							bit 8

U-0	U-0	U-0	U-0	U-0	U-0	U-0	U-0
—	—	—	—	—	—	—	—
bit 7							bit 0

Legend:			
R = Readable bit	W = Writable bit	U = Unimplemented bit, read as ‘0’	
-n = Value at POR	‘1’ = Bit is set	‘0’ = Bit is cleared	x = Bit is unknown

bit 15-12 **Unimplemented:** Read as ‘0’

bit 11 **PMDLOCK:** PMD Lock bit
1 = PMD bits can be written
0 = PMD bits are not allowed to be written

bit 10-0 **Unimplemented:** Read as ‘0’

© 2017-2018 Microchip Technology Inc.

REGISTER 7-10: PMD1: SLAVE PERIPHERAL MODULE DISABLE 1 CONTROL REGISTER

U-0	U-0	U-0	U-0	R/W-0	R/W-0	R/W-0	U-0
—	—	—	—	T1MD	QEIMD	PWMMD	—
bit 15							bit 8

R/W-0	U-0	R/W-0	U-0	R/W-0	U-0	U-0	R/W-0
I2C1MD	—	U1MD	—	SPI1MD	—	—	ADC1MD
bit 7							bit 0

Legend:			
R = Readable bit	W = Writable bit	U = Unimplemented bit, read as ‘0’	
-n = Value at POR	‘1’ = Bit is set	‘0’ = Bit is cleared	x = Bit is unknown

bit 15-12 **Unimplemented:** Read as ‘0’

bit 11 **T1MD:** Timer1 Module Disable bit
1 = Timer1 module is disabled
0 = Timer1 module is enabled

bit 10 **QEIMD:** QEI Module Disable bit
1 = QEI module is disabled
0 = QEI module is enabled

bit 9 **PWMMD:** PWM Module Disable bit
1 = PWM module is disabled
0 = PWM module is enabled

bit 8 **Unimplemented:** Read as ‘0’

bit 7 **I2C1MD:** I2C1 Module Disable bit
1 = I2C1 module is disabled
0 = I2C1 module is enabled

bit 6 **Unimplemented:** Read as ‘0’

bit 5 **U1MD:** UART1 Module Disable bit
1 = UART1 module is disabled
0 = UART1 module is enabled

bit 4 **Unimplemented:** Read as ‘0’

bit 3 **SPI1MD:** SPI1 Module Disable bit
1 = SPI1 module is disabled
0 = SPI1 module is enabled

bit 2-1 **Unimplemented:** Read as ‘0’

bit 0 **ADC1MD:** ADC Module Disable bit
1 = ADC module is disabled
0 = ADC module is enabled

REGISTER 7-11: PMD2: SLAVE PERIPHERAL MODULE DISABLE 2 CONTROL REGISTER

U-0	U-0	U-0	U-0	U-0	U-0	U-0	U-0
—	—	—	—	—	—	—	—
bit 15							bit 8

U-0	U-0	U-0	U-0	R/W-0	R/W-0	R/W-0	R/W-0
—	—	—	—	CCP4MD	CCP3MD	CCP2MD	CCP1MD
bit 7							bit 0

Legend:			
R = Readable bit	W = Writable bit	U = Unimplemented bit, read as ‘0’	
-n = Value at POR	‘1’ = Bit is set	‘0’ = Bit is cleared	x = Bit is unknown

bit 15-4 **Unimplemented:** Read as ‘0’

bit 3 **CCP4MD:** SCCP4 Module Disable bit
1 = SCCP4 module is disabled
0 = SCCP4 module is enabled

bit 2 **CCP3MD:** SCCP3 Module Disable bit
1 = SCCP3 module is disabled
0 = SCCP3 module is enabled

bit 1 **CCP2MD:** SCCP2 Module Disable bit
1 = SCCP2 module is disabled
0 = SCCP2 module is enabled

bit 0 **CCP1MD:** SCCP1 Module Disable bit
1 = SCCP1 module is disabled
0 = SCCP1 module is enabled

© 2017-2018 Microchip Technology Inc.

REGISTER 7-12: PMD4: SLAVE PERIPHERAL MODULE DISABLE 4 CONTROL REGISTER

U-0	U-0	U-0	U-0	U-0	U-0	U-0	U-0
—	—	—	—	—	—	—	
bit 15							bit 8

U-0	U-0	U-0	U-0	R/W-0	U-0	U-0	U-0
—	—	—	—	REFOMD	—	—	—
bit 7							bit 0

Legend:			
R = Readable bit	W = Writable bit	U = Unimplemented bit, read as ‘0’	
-n = Value at POR	‘1’ = Bit is set	‘0’ = Bit is cleared	x = Bit is unknown

bit 15-4 **Unimplemented:** Read as ‘0’

bit 3 **REFOMD:** Reference Clock Module Disable bit
1 = Reference clock module is disabled
0 = Reference clock module is enabled

bit 2-0 **Unimplemented:** Read as ‘0’

REGISTER 7-13: PMD6: SLAVE PERIPHERAL MODULE DISABLE 6 CONTROL REGISTER HIGH

U-0	U-0	U-0	U-0	U-0	U-0	R/W-0	R/W-0
—	—	—	—	—	—	DMA1MD	DMA0MD
bit 15							bit 8

U-0	U-0	U-0	U-0	U-0	U-0	U-0	U-0
—	—	—	—	—	—	—	—
bit 7							bit 0

Legend:			
R = Readable bit	W = Writable bit	U = Unimplemented bit, read as ‘0’	
-n = Value at POR	‘1’ = Bit is set	‘0’ = Bit is cleared	x = Bit is unknown

bit 15-10 **Unimplemented:** Read as ‘0’

bit 9 **DMA1MD:** DMA1 Module Disable bit
1 = DMA1 module is disabled
0 = DMA1 module is enabled

bit 8 **DMA0MD:** DMA0 Module Disable bit
1 = DMA0 module is disabled
0 = DMA0 module is enabled

bit 7-0 **Unimplemented:** Read as ‘0’

© 2017-2018 Microchip Technology Inc.

REGISTER 7-14: PMD7: SLAVE PERIPHERAL MODULE DISABLE 7 CONTROL REGISTER LOW

U-0	U-0	U-0	U-0	U-0	R/W-0	R/W-0	R/W-0
—	—	—	—	—	CMP3MD	CMP2MD	CMP1MD
bit 15							bit 8

U-0	U-0	U-0	U-0	U-0	U-0	R/W-0	U-0
—	—	—	—	—	—	PGA1MD	—
bit 7							bit 0

Legend:			
R = Readable bit	W = Writable bit	U = Unimplemented bit, read as ‘0’	
-n = Value at POR	‘1’ = Bit is set	‘0’ = Bit is cleared	x = Bit is unknown

bit 15-11 **Unimplemented:** Read as ‘0’

bit 10 **CMP3MD:** Comparator 3 disable bit
1 = Comparator 3 module is disabled
0 = Comparator 3 module is enabled

bit 9 **CMP2MD:** Comparator 2 disable bit
1 = Comparator 2 module is disabled
0 = Comparator 2 module is enabled

bit 8 **CMP1MD:** Comparator 1 disable bit
1 = Comparator 1 module is disabled
0 = Comparator 1 module is enabled

bit 7-2 **Unimplemented:** Read as ‘0’

bit 1 **PGA1MD**: PGA module disable bit
1 = PGA module is disabled
0 = PGA module is enabled

bit 0 **Unimplemented:** Read as ‘0’

REGISTER 7-15: PMD8: SLAVE PERIPHERAL MODULE DISABLE 8 CONTROL REGISTER

U-0	R/W-0	U-0	U-0	U-0	R/W-0	U-0	U-0
—	PGA3MD	—	—	—	PGA2MD	—	—
bit 15							bit 8

U-0	U-0	R/W-0	R/W-0	R/W-0	R/W-0	U-0	U-0
—	—	CLC4MD	CLC3MD	CLC2MD	CLC1MD	—	—
bit 7							bit 0

Legend:			
R = Readable bit	W = Writable bit	U = Unimplemented bit, read as ‘0’	
-n = Value at POR	‘1’ = Bit is set	‘0’ = Bit is cleared	x = Bit is unknown

bit 15 **Unimplemented:** Read as ‘0’

bit 14 **PGA3MD:** PGA3 Module Disable bit
1 = PGA3 module is disabled
0 = PGA3 module is enabled

bit 13-11 **Unimplemented:** Read as ‘0’

bit 10 **PGA2MD:** PGA2 Module Disable bit
1 = PGA2 module is disabled
0 = PGA2 module is enabled

bit 9-6 **Unimplemented:** Read as ‘0’

bit 5 **CLC4MD:** CLC4 Module Disable bit
1 = CLC4 module is disabled
0 = CLC4 module is enabled

bit 4 **CLC3MD:** CLC3 Module Disable bit
1 = CLC3 module is disabled
0 = CLC3 module is enabled

bit 3 **CLC2MD:** CLC2 Module Disable bit
1 = CLC2 module is disabled
0 = CLC2 module is enabled

bit 2 **CLC1MD:** CLC1 Module Disable bit
1 = CLC1 module is disabled
0 = CLC1 module is enabled

bit 1-0 **Unimplemented:** Read as ‘0’

© 2017-2018 Microchip Technology Inc.

TABLE 7-2: MASTER PMD REGISTERS

Register	Bit 15	Bit14	Bit 13	Bit 12	Bit 11	Bit 10	Bit 9	Bit 8	Bit 7	Bit 6	Bit 5	Bit 4	Bit 3	Bit 2	Bit 1	Bit 0
PMDCONL	—	—	—	—	PMDLOCK	—	—	—	—	—	—	—	—	—	—	—
PMD1	—	—	—	—	T1MD	QEIMD	PWMMD	—	I2C1MD	U2MD	U1MD	SPI2MD	SPI1MD	—	C1MD	ADC1MD
PMD2	—	—	—	—	—	—	—	—	CCP8MD	CCP7MD	CCP6MD	CCP5MD	CCP4MD	CCP3MD	CCP2MD	CCP1MD
PMD3	—	—	—	—	—	—	—	—	CRCMD	—	—	—	—	—	I2C2MD	—
PMD4	—	—	—	—	—	—	—	—	—	—	—	—	REFOMD	—	—	—
PMD6	—	—	DMA5MD	DMA4MD	DMA3MD	DMA2MD	DMA1MD	DMA0MD	—	—	—	—	—	—	—	—
PMD7	—	—	—	—	—	—	—	CMP1MD	—	—	—	—	PTGMD	—	—	—
PMD8	—	—	—	SENT2MD	SENT1MD	—	—	—	—	—	CLC4MD	CLC3MD	CLC2MD	CLC1MD	BIASMD	—

TABLE 7-3: SLAVE PMD REGISTERS

Register	Bit 15	Bit14	Bit 13	Bit 12	Bit 11	Bit 10	Bit 9	Bit 8	Bit 7	Bit 6	Bit 5	Bit 4	Bit 3	Bit 2	Bit 1	Bit 0
PMDCON	—	—	—	—	PMDLOCK	—	—	—	—	—	—	—	—	—	—	—
PMD1	—	—	—	—	T1MD	QEIMD	PWMMD	—	I2C1MD	—	U1MD	—	SPI1MD	—	—	ADC1MD
PMD2	—	—	—	—	—	—	—	—	—	—	—	—	CCP4MD	CCP3MD	CCP2MD	CCP1MD
PMD4	—	—	—	—	—	—	—	—	—	—	—	—	REFOMD	—	—	—
PMD6	—	—	—	—	—	—	DMA1MD	DMA0MD	—	—	—	—	—	—	—	—
PMD7	—	—	—	—	—	CMP3MD	CMP2MD	CMP1MD	—	—	—	—	—	—	PGA1MD	—
PMD8	—	PGA3MD	—	—	—	PGA2MD	—	—	—	—	CLC4MD	CLC3MD	CLC2MD	CLC1MD	—	—

© 2017-2018 Microchip Technology Inc.

NOTES:

© 2017-2018 Microchip Technology Inc.

8.0 DIRECT MEMORY ACCESS (DMA) CONTROLLER

Note 1: This data sheet summarizes the features of this group of dsPIC33 devices. It is not intended to be a comprehensive reference source. For more information, refer to **"Direct Memory Access Controller (DMA)"** (DS39742) in the *"dsPIC33/PIC24 Family Reference Manual"*, which is available from the Microchip web site (www.microchip.com).

2: The DMA is identical for both Master core and Slave core. The x is common for both Master and Slave (where the x represents the number of the specific module being addressed).

3: All associated register names are the same on the Master core and the Slave core. The Slave code will be developed in a separate project in MPLAB® X IDE with the device selection, dsPIC33CH128MP508**S1**, where **S1** indicates the Slave device.

Table 8-1 shows an overview of the DMA module.

TABLE 8-1: DMA MODULE OVERVIEW

	Number of DMA Modules	Identical (Modules)
Master Core	6	Yes
Slave Core	2	Yes

The Direct Memory Access (DMA) Controller is designed to service high data throughput peripherals operating on the SFR bus, allowing them to access data memory directly and alleviating the need for CPU-intensive management. By allowing these data-intensive peripherals to share their own data path, the main data bus is also deloaded, resulting in additional power savings.

The DMA Controller functions both as a peripheral and a direct extension of the CPU. It is located on the microcontroller data bus, between the CPU and DMA-enabled peripherals, with direct access to SRAM. This partitions the SFR bus into two buses, allowing the DMA Controller access to the DMA-capable peripherals located on the new DMA SFR bus. The controller serves as a Master device on the DMA SFR bus, controlling data flow from DMA-capable peripherals.

The controller also monitors CPU instruction processing directly, allowing it to be aware of when the CPU requires access to peripherals on the DMA bus and automatically relinquishing control to the CPU as needed. This increases the effective bandwidth for handling data without DMA operations, causing a processor Stall. This makes the controller essentially transparent to the user.

The DMA Controller has these features:

- A Total of Eight (Six Master, Two Slave), Independently Programmable Channels
- Concurrent Operation with the CPU (no DMA caused Wait states)
- DMA Bus Arbitration
- Five Programmable Address modes
- Four Programmable Transfer modes
- Four Flexible Internal Data Transfer modes
- Byte or Word Support for Data Transfer
- 16-Bit Source and Destination Address Register for each Channel, Dynamically Updated and Reloadable
- 16-Bit Transaction Count Register, Dynamically Updated and Reloadable
- Upper and Lower Address Limit Registers
- Counter Half-Full Level Interrupt
- Software Triggered Transfer
- Null Write mode for Symmetric Buffer Operations

A simplified block diagram of the DMA Controller is shown if Figure 8-1.

FIGURE 8-1: DMA FUNCTIONAL BLOCK DIAGRAM

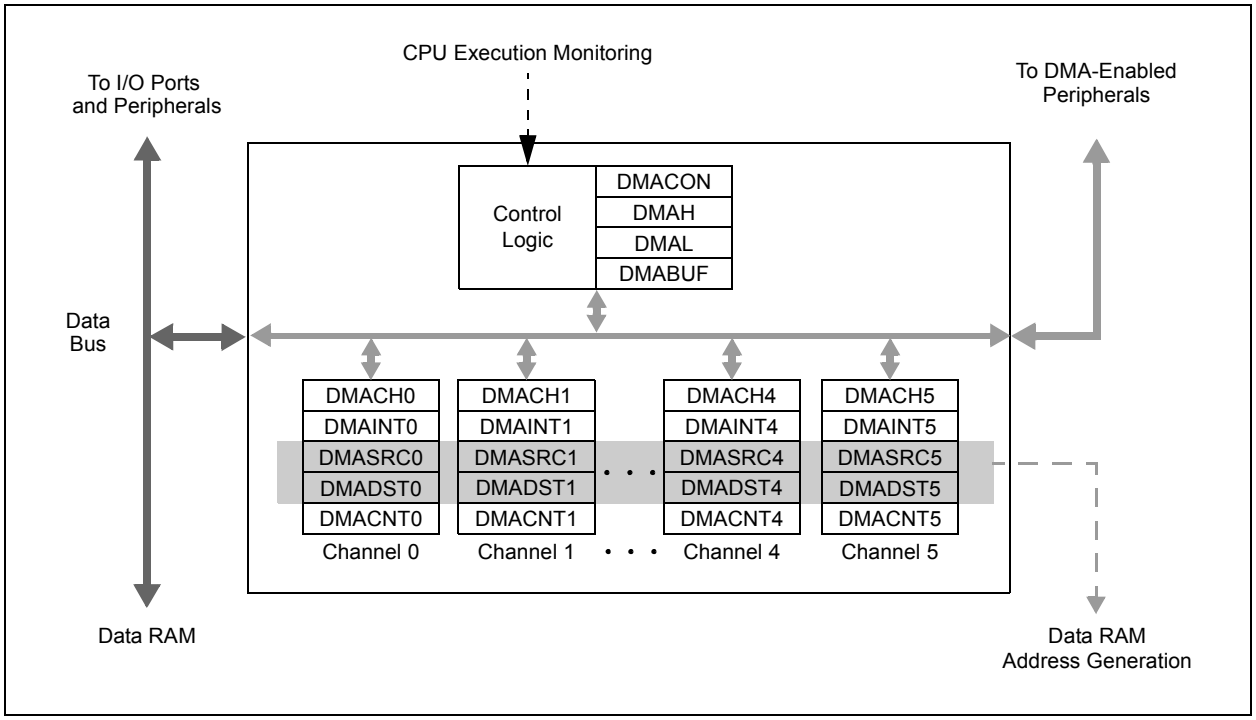

© 2017-2018 Microchip Technology Inc.

8.1 Summary of DMA Operations

The DMA Controller is capable of moving data between addresses according to a number of different parameters. Each of these parameters can be independently configured for any transaction. In addition, any or all of the DMA channels can independently perform a different transaction at the same time. Transactions are classified by these parameters:

- Source and destination (SFRs and data RAM)
- Data size (byte or word)
- Trigger source
- Transfer mode (One-Shot, Repeated or Continuous)
- Addressing modes (Fixed Address or Address Blocks with or without Address Increment/Decrement)

In addition, the DMA Controller provides channel priority arbitration for all channels.

8.1.1 SOURCE AND DESTINATION

Using the DMA Controller, data may be moved between any two addresses in the Data Space. The SFR space (0000h to 0FFFh) or the data RAM space (Master is 1000h to 4FFFh and Slave is 1000 to 1FFFh) can serve as either the source or the destination. Data can be moved between these areas in either direction or between addresses in either area. The four different combinations are shown in Figure 8-2.

If it is necessary to protect areas of data RAM, the DMA Controller allows the user to set upper and lower address boundaries for operations in the Data Space above the SFR space. The boundaries are set by the DMAH and DMAL Limit registers. If a DMA channel attempts an operation outside of the address boundaries, the transaction is terminated and an interrupt is generated.

8.1.2 DATA SIZE

The DMA Controller can handle both 8-bit and 16-bit transactions. Size is user-selectable using the SIZE bit (DMACHn<1>). By default, each channel is configured for word-size transactions. When byte-size transactions are chosen, the LSB of the source and/or destination address determines if the data represents the upper or lower byte of the data RAM location.

8.1.3 TRIGGER SOURCE

The DMA Controller can use 82 of the device's interrupt sources to initiate a transaction. The DMA trigger sources occur in reverse order from their natural interrupt priority and are shown in Table 8-2.

Since the source and destination addresses for any transaction can be programmed independently of the trigger source, the DMA Controller can use any trigger to perform an operation on any peripheral. This also allows DMA channels to be cascaded to perform more complex transfer operations.

8.1.4 TRANSFER MODE

The DMA Controller supports four types of data transfers, based on the volume of data to be moved for each trigger.

- One-Shot: A single transaction occurs for each trigger.
- Continuous: A series of back-to-back transactions occur for each trigger; the number of transactions is determined by the DMACNTn transaction counter.
- Repeated One-Shot: A single transaction is performed repeatedly, once per trigger, until the DMA channel is disabled.
- Repeated Continuous: A series of transactions are performed repeatedly, one cycle per trigger, until the DMA channel is disabled.

All transfer modes allow the option to have the source and destination addresses, and counter value, automatically reloaded after the completion of a transaction.

8.1.5 ADDRESSING MODES

The DMA Controller also supports transfers between single addresses or address ranges. The four basic options are:

- Fixed-to-Fixed: Between two constant addresses
- Fixed-to-Block: From a constant source address to a range of destination addresses
- Block-to-Fixed: From a range of source addresses to a single, constant destination address
- Block-to-Block: From a range of source addresses to a range of destination addresses

The option to select auto-increment or auto-decrement of source and/or destination addresses is available for Block Addressing modes.

In addition to the four basic modes, the DMA Controller also supports Peripheral Indirect Addressing (PIA) mode, where the source or destination address is generated jointly by the DMA Controller and a PIA-capable peripheral. When enabled, the DMA channel provides a base source and/or destination address, while the peripheral provides a fixed range offset address.

FIGURE 8-2: TYPES OF DMA DATA TRANSFERS

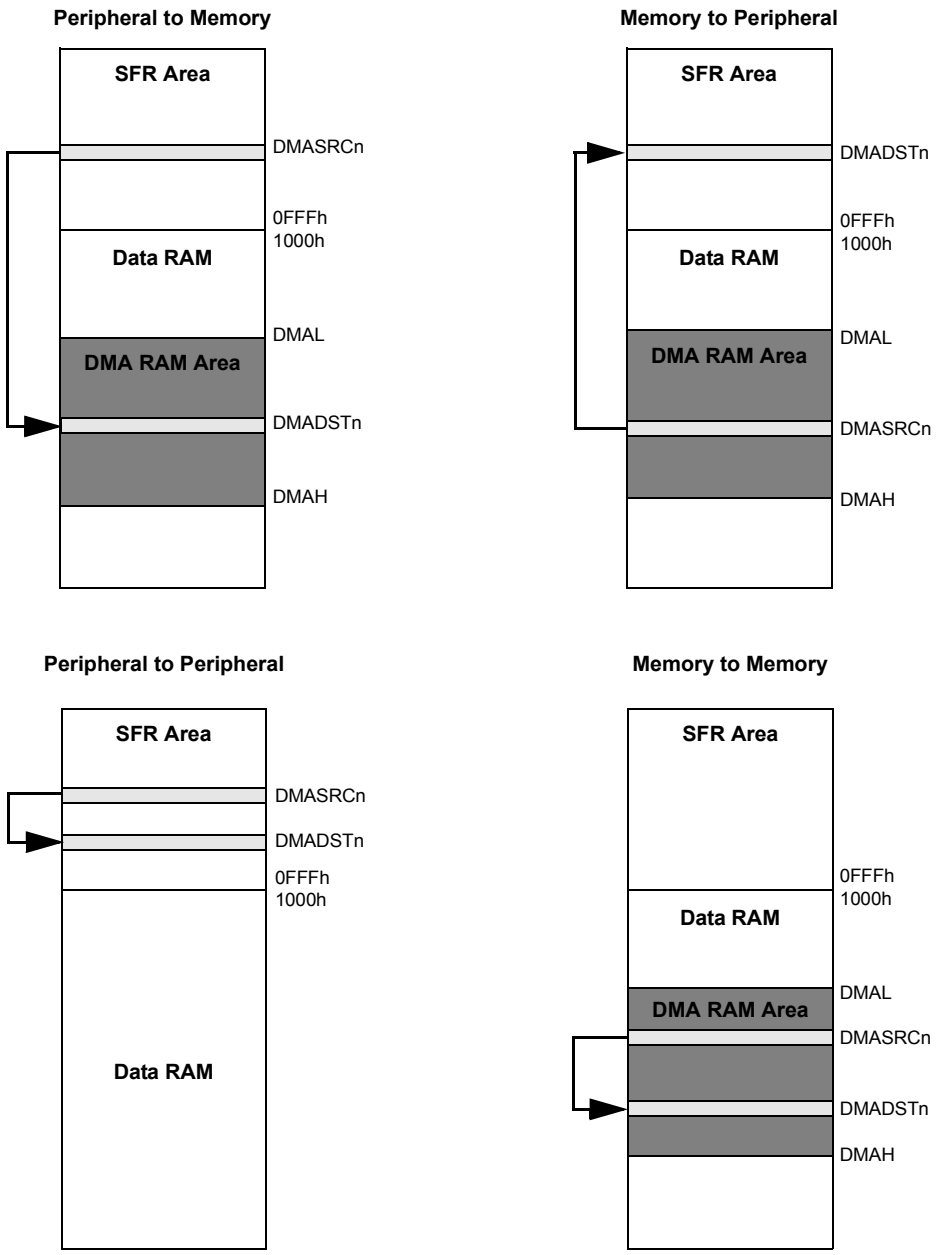

Note: Relative sizes of memory areas are not shown to scale.

© 2017-2018 Microchip Technology Inc.

8.1.6 CHANNEL PRIORITY

Each DMA channel functions independently of the others, but also competes with the others for access to the data and DMA buses. When access collisions occur, the DMA Controller arbitrates between the channels using a user-selectable priority scheme. Two schemes are available:

- Round Robin: When two or more channels collide, the lower numbered channel receives priority on the first collision. On subsequent collisions, the higher numbered channels each receive priority based on their channel number.
- Fixed: When two or more channels collide, the lowest numbered channel always receives priority, regardless of past history; however, any channel being actively processed is not available for an immediate retrigger. If a higher priority channel is continually requesting service, it will be scheduled for service after the next lower priority channel with a pending request.

8.2 Typical Setup

To set up a DMA channel for a basic data transfer:

1. Enable the DMA Controller (DMAEN = `1`) and select an appropriate channel priority scheme by setting or clearing PRSSEL.
2. Program DMAH and DMAL with appropriate upper and lower address boundaries for data RAM operations.
3. Select the DMA channel to be used and disable its operation (CHEN = `0`).
4. Program the appropriate source and destination addresses for the transaction into the channel's DMASRCn and DMADSTn registers. For PIA mode addressing, use the base address value.
5. Program the DMACNTn register for the number of triggers per transfer (One-Shot or Continuous modes) or the number of words (bytes) to be transferred (Repeated modes).
6. Set or clear the SIZE bit to select the data size.
7. Program the TRMODE<1:0> bits to select the Data Transfer mode.
8. Program the SAMODE<1:0> and DAMODE<1:0> bits to select the addressing mode.
9. Enable the DMA channel by setting CHEN.
10. Enable the trigger source interrupt.

8.3 Peripheral Module Disable

The channels of the DMA Controller can be individually powered down using the Peripheral Module Disable (PMD) registers.

8.4 Registers

The DMA Controller uses a number of registers to control its operation. The number of registers depends on the number of channels implemented for a particular device.

There are always four module-level registers (one control and three buffer/address):

- DMACON: DMA Engine Control Register (Register 8-1)
- DMAH and DMAL: DMA High and Low Address Limit Registers
- DMABUF: DMA Transfer Data Buffer

Each of the DMA channels implements five registers (two control and three buffer/address):

- DMACHn: DMA Channel n Control Register (Register 8-2)
- DMAINTn: DMA Channel n Interrupt Register (Register 8-3)
- DMASRCn: DMA Data Source Address Pointer for Channel n Register
- DMADSTn: DMA Data Destination Source for Channel n Register
- DMACNTn: DMA Transaction Counter for Channel n Register

For dsPIC33CH128MP508 devices, there are a total of 34 registers.

8.5 DMA Control Registers

REGISTER 8-1: DMACON: DMA ENGINE CONTROL REGISTER

R/W-0	U-0	U-0	U-0	U-0	U-0	U-0	U-0
DMAEN	—	—	—	—	—	—	—
bit 15							bit 8

U-0	U-0	U-0	U-0	U-0	U-0	U-0	R/W-0
—	—	—	—	—	—	—	PRSSEL
bit 7							bit 0

Legend:			
R = Readable bit	W = Writable bit	U = Unimplemented bit, read as ‘0’	
-n = Value at POR	‘1’ = Bit is set	‘0’ = Bit is cleared	x = Bit is unknown

bit 15 **DMAEN:** DMA Module Enable bit
`1` = Enables module
`0` = Disables module and terminates all active DMA operation(s)

bit 14-1 **Unimplemented:** Read as ‘`0`’

bit 0 **PRSSEL:** Channel Priority Scheme Selection bit
`1` = Round robin scheme
`0` = Fixed priority scheme

© 2017-2018 Microchip Technology Inc.

REGISTER 8-2: DMACHn: DMA CHANNEL n CONTROL REGISTER

U-0	U-0	U-0	r-0	R/W-0	R/W-0	R/W-0	R/W-0
—	—	—	—	—	NULLW	RELOAD(1)	CHREQ(3)
bit 15							bit 8

R/W-0	R/W-0	R/W-0	R/W-0	R/W-0	R/W-0	R/W-0	R/W-0
SAMODE1	SAMODE0	DAMODE1	DAMODE0	TRMODE1	TRMODE0	SIZE	CHEN
bit 7							bit 0

Legend:	r = Reserved bit		
R = Readable bit	W = Writable bit	U = Unimplemented bit, read as ‘0’	
-n = Value at POR	‘1’ = Bit is set	‘0’ = Bit is cleared	x = Bit is unknown

bit 15-13 **Unimplemented:** Read as ‘0’

bit 12 **Reserved:** Maintain as ‘0’

bit 11 **Unimplemented:** Read as ‘0’

bit 10 **NULLW:** Null Write Mode bit
1 = A dummy write is initiated to DMASRCn for every write to DMADSTn
0 = No dummy write is initiated

bit 9 **RELOAD:** Address and Count Reload bit(1)
1 = DMASRCn, DMADSTn and DMACNTn registers are reloaded to their previous values upon the start of the next operation
0 = DMASRCn, DMADSTn and DMACNTn are not reloaded on the start of the next operation(2)

bit 8 **CHREQ:** DMA Channel Software Request bit(3)
1 = A DMA request is initiated by software; automatically cleared upon completion of a DMA transfer
0 = No DMA request is pending

bit 7-6 **SAMODE<1:0>:** Source Address Mode Selection bits
11 = DMASRCn is used in Peripheral Indirect Addressing and remains unchanged
10 = DMASRCn is decremented based on the SIZE bit after a transfer completion
01 = DMASRCn is incremented based on the SIZE bit after a transfer completion
00 = DMASRCn remains unchanged after a transfer completion

bit 5-4 **DAMODE<1:0>:** Destination Address Mode Selection bits
11 = DMADSTn is used in Peripheral Indirect Addressing and remains unchanged
10 = DMADSTn is decremented based on the SIZE bit after a transfer completion
01 = DMADSTn is incremented based on the SIZE bit after a transfer completion
00 = DMADSTn remains unchanged after a transfer completion

bit 3-2 **TRMODE<1:0>:** Transfer Mode Selection bits
11 = Repeated Continuous
10 = Continuous
01 = Repeated One-Shot
00 = One-Shot

bit 1 **SIZE:** Data Size Selection bit
1 = Byte (8-bit)
0 = Word (16-bit)

bit 0 **CHEN:** DMA Channel Enable bit
1 = The corresponding channel is enabled
0 = The corresponding channel is disabled

Note 1: Only the original DMACNTn is required to be stored to recover the original DMASRCn and DMADSTn values.
2: DMACNTn will always be reloaded in Repeated mode transfers, regardless of the state of the RELOAD bit.
3: The number of transfers executed while CHREQ is set depends on the configuration of TRMODE<1:0>.

REGISTER 8-3: DMAINTn: DMA CHANNEL n INTERRUPT REGISTER

R-0	R/W-0	R/W-0	R/W-0	R/W-0	R/W-0	R/W-0	R/W-0
DBUFWF(1)	CHSEL6	CHSEL5	CHSEL4	CHSEL3	CHSEL2	CHSEL1	CHSEL0
bit 15							bit 8

R/W-0	R/W-0	R/W-0	R/W-0	R/W-0	U-0	U-0	R/W-0
HIGHIF(1,2)	LOWIF(1,2)	DONEIF(1)	HALFIF(1)	OVRUNIF(1)	—	—	HALFEN
bit 7							bit 0

Legend:			
R = Readable bit	W = Writable bit	U = Unimplemented bit, read as ‘0’	
-n = Value at POR	‘1’ = Bit is set	‘0’ = Bit is cleared	x = Bit is unknown

bit 15 **DBUFWF:** DMA Buffered Data Write Flag bit(1)
- 1 = The content of the DMA buffer has not been written to the location specified in DMADSTn or DMASRCn in Null Write mode
- 0 = The content of the DMA buffer has been written to the location specified in DMADSTn or DMASRCn in Null Write mode

bit 14-8 **CHSEL<6:0>:** DMA Channel Trigger Selection bits
See Table 8-2 for a complete list.

bit 7 **HIGHIF:** DMA High Address Limit Interrupt Flag bit(1,2)
- 1 = The DMA channel has attempted to access an address higher than DMAH or the upper limit of the data RAM space
- 0 = The DMA channel has not invoked the high address limit interrupt

bit 6 **LOWIF:** DMA Low Address Limit Interrupt Flag bit(1,2)
- 1 = The DMA channel has attempted to access the DMA SFR address lower than DMAL, but above the SFR range (07FFh)
- 0 = The DMA channel has not invoked the low address limit interrupt

bit 5 **DONEIF:** DMA Complete Operation Interrupt Flag bit(1)

If CHEN = 1:
- 1 = The previous DMA session has ended with completion
- 0 = The current DMA session has not yet completed

If CHEN = 0:
- 1 = The previous DMA session has ended with completion
- 0 = The previous DMA session has ended without completion

bit 4 **HALFIF:** DMA 50% Watermark Level Interrupt Flag bit(1)
- 1 = DMACNTn has reached the halfway point to 0000h
- 0 = DMACNTn has not reached the halfway point

bit 3 **OVRUNIF:** DMA Channel Overrun Flag bit(1)
- 1 = The DMA channel is triggered while it is still completing the operation based on the previous trigger
- 0 = The overrun condition has not occurred

bit 2-1 **Unimplemented:** Read as ‘0’

bit 0 **HALFEN:** Halfway Completion Watermark bit
- 1 = Interrupts are invoked when DMACNTn has reached its halfway point and at completion
- 0 = An interrupt is invoked only at the completion of the transfer

Note 1: Setting these flags in software does not generate an interrupt.

2: Testing for address limit violations (DMASRCn or DMADSTn is either greater than DMAH or less than DMAL) is NOT done before the actual access.

© 2017-2018 Microchip Technology Inc.

TABLE 8-2: DMA CHANNEL TRIGGER SOURCES (MASTER)

CHSEL<6:0>		Trigger (Interrupt)	CHSEL<6:0>		Trigger (Interrupt)	CHSEL<6:0>		Trigger (Interrupt)
0000000	00h	INT0 – External Interrupt 0	0100011	23h	(Reserved, do not use)	1000101	45h	CLC2 Interrupt
0000001	01h	SCCP1 Interrupt	0100100	24h	PWM Event C	1000110	46h	SPI1 – Fault Interrupt
0000010	02h	SPI1 Receiver	0100101	25h	SENT1 TX/RX	1000111	47h	SPI2 – Fault Interrupt
0000011	03h	SPI1 Transmitter	0100110	26h	SENT2 TX/RX	1001000	48h	(Reserved, do not use)
0000100	04h	UART1 Receiver	0100111	27h	ADC1 Group Convert Done	1001001	49h	(Reserved, do not use)
0000101	05h	UART1 Transmitter	0101000	28h	ADC Done AN0	1001010	4Ah	MSI Slave Initiated Slave IRQ
0000110	06h	ECC Single Bit Error	0101001	29h	ADC Done AN1	1001011	4Bh	MSI Protocol A
0000111	07h	NVM Write Complete	0101010	2Ah	ADC Done AN2	1001100	4Ch	MSI Protocol B
0001000	08h	INT1 – External Interrupt 1	0101011	2Bh	ADC Done AN3	1001101	4Dh	MSI Protocol C
0001001	09h	SI2C1 – I2C1 Slave Event	0101100	2Ch	ADC Done AN4	1001110	4Eh	MSI Protocol D
0001010	0Ah	MI2C1 – I2C1 Master Event	0101101	2Dh	ADC Done AN5	1001111	4Fh	MSI Protocol E
0001010	0Bh	INT2 – External Interrupt 2	0101110	2Eh	ADC Done AN6	1010000	50h	MSI Protocol F
0001100	0Ch	SCCP2 Interrupt	0101111	2Fh	ADC Done AN7	1010001	51h	MSI Protocol G
0001101	0Dh	INT3 – External Interrupt 3	0110000	30h	ADC Done AN8	1010010	52h	MSI Protocol H
0001110	0Eh	UART2 Receiver	0110001	31h	ADC Done AN9	1010011	53h	MSI Master Read FIFO Data Ready IRQ
0001111	0Fh	UART2 Transmitter	0110010	32h	ADC Done AN10	1010100	54h	MSI Master Write FIFO Empty IRQ
0010000	10h	SPI2 Receiver	0110011	33h	ADC Done AN11	1010101	55h	MSI Fault (Over/Underflow)
0010001	11h	SPI2 Transmitter	0110100	34h	ADC Done AN12	1010110	56h	MSI Master Reset IRQ
0010010	12h	SCCP3 Interrupt	0110101	35h	ADC Done AN13	1010111	57h	PWM Event D
0010011	13h	SI2C2 – I2C2 Slave Event	0110110	36h	ADC Done AN14	1011000	58h	PWM Event E
0010100	14h	MI2C2 – I2C1 Master Event	0110111	37h	ADC Done AN15	1011001	59h	PWM Event F
0010101	15h	SCCP4 Interrupt	0111000	38h	ADC Done AN16	1011010	5Ah	Slave ICD Breakpoint Interrupt
0010110	16h	SCCP5 Interrupt	0111001	39h	ADC Done AN17	1011011	5Bh	(Reserved, do not use)
0010111	17h	SCCP6 Interrupt	0111010	3Ah	(Reserved, do not use)	1011100	5Ch	SCCP7 Interrupt
0011000	18h	CRC Generator Interrupt	0111010	3Bh	(Reserved, do not use)	1011101	5Dh	SCCP8 Interrupt
0011001	19h	PWM Event A	0111100	3Ch	(Reserved, do not use)	1011110	5Eh	Slave Clock Fail Interrupt
0011011	1Bh	PWM Event B	0111101	3Dh	(Reserved, do not use)	1011111	5Fh	ADC FIFO Ready Interrupt
0011100	1Ch	PWM Generator 1	0111110	3Eh	(Reserved, do not use)	1100000	60h	CLC3 Positive Edge Interrupt
0011101	1Dh	PWM Generator 2	0111111	3Fh	(Reserved, do not use)	1100001	61h	CLC4 Positive Edge Interrupt
0011110	1Eh	PWM Generator 3	1000000	40h	AD1FLTR1 – Oversample Filter 1	1100001	62h	(Reserved, do not use)
0011111	1Fh	PWM Generator 4	1000001	41h	AD1FLTR2 – Oversample Filter 2	. . .	. . .	
0100000	20h	(Reserved, do not use)	1000010	42h	AD1FLTR3 – Oversample Filter 3	1111111	7Fh	
0100001	21h	(Reserved, do not use)	1000011	43h	AD1FLTR4 – Oversample Filter 4			
0100010	22h	(Reserved, do not use)	1000100	44h	CLC1 Interrupt			

TABLE 8-3: DMA CHANNEL TRIGGER SOURCES (SLAVE)

CHSEL<6:0>		Trigger (Interrupt)	CHSEL<6:0>		Trigger (Interrupt)	CHSEL<6:0>		Trigger (Interrupt)
0000000	00h	INT0 – External Interrupt 0	0100010	22h	PWM Generator 7	1000100	44h	CLC1 Interrupt
0000001	01h	SCCP1 Interrupt	0100011	23h	PWM Generator 8	1000101	45h	CLC2 Interrupt
0000010	02h	SPI1 Receiver	0100100	24h	PWM Event C	1000110	46h	SPI1 – Fault Interrupt
0000011	03h	SPI1 Transmitter	0100101	25h	(Reserved, do not use)	1000111	47h	(Reserved, do not use)
0000100	04h	UART1 Receiver	0100110	26h	(Reserved, do not use)	1001000	48h	(Reserved, do not use)
0000101	05h	UART1 Transmitter	0100111	27h	ADC1 Group Convert Done	1001001	49h	(Reserved, do not use)
0000110	06h	ECC Single Bit Error	0101000	28h	ADC Done AN0	1001010	4Ah	MSI Master Initiated Slave IRQ
0000111	07h	NVM Write Complete	0101001	29h	ADC Done AN1	1001011	4Bh	MSI Protocol A
0001000	08h	INT1 – External Interrupt 1	0101010	2Ah	ADC Done AN2	1001100	4Ch	MSI Protocol B
0001001	09h	SI2C1 – I2C1 Slave Event	0101011	2Bh	ADC Done AN3	1001101	4Dh	MSI Protocol C
0001010	0Ah	MI2C1 – I2C1 Master Event	0101100	2Ch	ADC Done AN4	1001110	4Eh	MSI Protocol D
0001010	0Bh	INT2 – External Interrupt 2	0101101	2Dh	ADC Done AN5	1001111	4Fh	MSI Protocol E
0001100	0Ch	SCCP2 Interrupt	0101110	2Eh	ADC Done AN6	1010000	50h	MSI Protocol F
0001101	0Dh	INT3 – External Interrupt 3	0101111	2Fh	ADC Done AN7	1010001	51h	MSI Protocol G
0001110	0Eh	(Reserved, do not use)	0110000	30h	ADC Done AN8	1010010	52h	MSI Protocol H
0001111	0Fh	(Reserved, do not use)	0110001	31h	ADC Done AN9	1010011	53h	MSI Slave Read FIFO Data Ready IRQ
0010000	10h	(Reserved, do not use)	0110010	32h	ADC Done AN10	1010100	54h	MSI Slave Write FIFO Empty IRQ
0010001	11h	(Reserved, do not use)	0110011	33h	ADC Done AN11	1010101	55h	MSI FIFO Fault (Over/Underflow)
0010010	12h	SCCP3 Interrupt	0110100	34h	ADC Done AN12	1010110	56h	MSI Master Reset IRQ
0010011	13h	(Reserved, do not use)	0110101	35h	ADC Done AN13	1010111	57h	PWM Event D
0010100	14h	(Reserved, do not use)	0110110	36h	ADC Done AN14	1011000	58h	PWM Event E
0010101	15h	SCCP4 Interrupt	0110111	37h	ADC Done AN15	1011001	59h	PWM Event F
0010110	16h	(Reserved, do not use)	0111000	38h	ADC Done AN16	1011010	5Ah	Master ICD Breakpoint Interrupt
0010111	17h	(Reserved, do not use)	0111001	39h	ADC Done AN17	1011011	5Bh	(Reserved, do not use)
0011000	18h	(Reserved, do not use)	0111010	3Ah	(Reserved, do not use)	1011100	5Ch	(Reserved, do not use)
0011001	19h	PWM Event A	0111010	3Bh	ADC Done AN19	1011101	5Dh	(Reserved, do not use)
0011010	1Ah	(Reserved, do not use)	0111100	3Ch	(Reserved, do not use)	1011110	5Eh	Master Clock Fail Interrupt
0011011	1Bh	PWM Event B	0111101	3Dh	(Reserved, do not use)	1011111	5Fh	ADC FIFO Ready Interrupt
0011100	1Ch	PWM Generator 1	0111110	3Eh	(Reserved, do not use)	1100000	60h	CLC3 Positive Edge Interrupt
0011101	1Dh	PWM Generator 2	0111111	3Fh	(Reserved, do not use)	1100001	61h	CLC4 Positive Edge Interrupt
0011110	1Eh	PWM Generator 3	1000000	40h	AD1FLTR1 – Oversample Filter 1	1100001	62h	(Reserved, do not use)
0011111	1Fh	PWM Generator 4	1000001	41h	AD1FLTR2 – Oversample Filter 2	. . .	. . .	
0100000	20h	PWM Generator 5	1000010	42h	AD1FLTR3 – Oversample Filter 3	1111111	7Fh	(Reserved, do not use)
0100001	21h	PWM Generator 6	1000011	43h	AD1FLTR4 – Oversample Filter 4			

© 2017-2018 Microchip Technology Inc.

9.0 HIGH-RESOLUTION PWM (HSPWM) WITH FINE EDGE PLACEMENT

Note 1: This data sheet summarizes the features of the dsPIC33CH128MP508 family of devices. It is not intended to be a comprehensive reference source. To complement the information in this data sheet, refer to **"High-Resolution PWM with Fine Edge Placement"** (DS70005320) in the *"dsPIC33/PIC24 Family Reference Manual"*, which is available from the Microchip web site (www.microchip.com).

2: The PWM is identical for both Master core and Slave core. The x is common for both Master core and Slave core (where the x represents the number of the specific module being addressed). The number of HSPWM modules available on the Master core and Slave core is different and they are located in different SFR locations.

3: All associated register names are the same on the Master core and the Slave core. The Slave code will be developed in a separate project in MPLAB® X IDE with the device selection, dsPIC33CH128MP508**S1**, where the **S1** indicates the Slave device. The Master is PWM1 to PWM4 and the Slave is PWM1 to PWM8.

Table 9-1 shows an overview of the PWM module.

TABLE 9-1: PWM MODULE OVERVIEW

	Number of PWM Modules	Identical (Modules)
Master Core	4	Yes
Slave Core	8	Yes

The High-Speed PWM (HSPWM) module is a Pulse-Width Modulated (PWM) module to support both motor control and power supply applications. This flexible module provides features to support many types of Motor Control (MC) and Power Control (PC) applications, including:

- AC-to-DC Converters
- DC-to-DC Converters
- AC and DC Motors: BLDC, PMSM, ACIM, SRM, etc.
- Inverters
- Battery Chargers
- Digital Lighting
- Power Factor Correction (PFC)

9.1 Features

- Up to Eight Independent PWM Generators for Slave Core, each with Dual Outputs
- Up to Four Independent PWM Generators for Master Core, each with Dual Outputs
- Operating modes:
  - Independent Edge mode
  - Variable Phase PWM mode
  - Center-Aligned mode
  - Double Update Center-Aligned mode
  - Dual Edge Center-Aligned mode
  - Dual PWM mode
- Output modes:
  - Complementary
  - Independent
  - Push-Pull
- Dead-Time Generator
- Leading-Edge Blanking (LEB)
- Output Override for Fault Handling
- Flexible Period/Duty Cycle Updating Options
- Programmable Control Inputs (PCI)
- Advanced Triggering Options
- Six Combinatorial Logic Outputs
- Six PWM Event Outputs

9.2 Architecture Overview

The PWM module consists of a common set of controls and features, and multiple instantiations of PWM Generators (PGs). Each PWM Generator can be independently configured or multiple PWM Generators can be used to achieve complex multiphase systems. PWM Generators can also be used to implement sophisticated triggering, protection and logic functions. A high-level block diagram is shown in Figure 9-1.

FIGURE 9-1: PWM HIGH-LEVEL BLOCK DIAGRAM

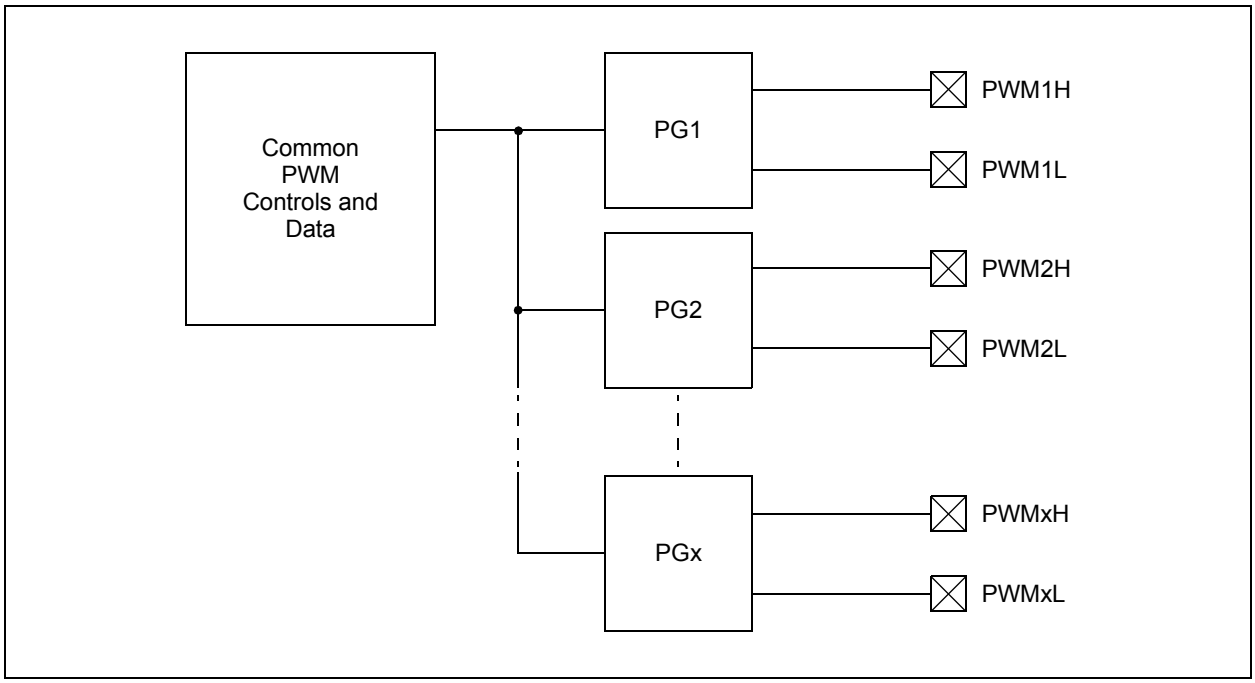

© 2017-2018 Microchip Technology Inc.

9.3 PWM Control Registers

There are two categories of Special Function Registers (SFRs) used to control the operation of the PWM module:

- Common, shared by all PWM Generators
- PWM Generator-specific

An ‘x’ in the register name denotes an instance of a PWM Generator.

A ‘y’ in the register name denotes an instance of the common function.

REGISTER 9-1: PCLKCON: PWM CLOCK CONTROL REGISTER

R/W-0	R/W-0	U-0	U-0	U-0	U-0	U-0	R/W-0
HRRDY	HRERR	—	—	—	—	—	LOCK(1)
bit 15							bit 8

U-0	U-0	R/W-0	R/W-0	U-0	U-0	R/W-0	R/W-0
—	—	DIVSEL1	DIVSEL0	—	—	MCLKSEL1(2)	MCLKSEL0(2)
bit 7							bit 0

Legend:			
R = Readable bit	W = Writable bit	U = Unimplemented bit, read as ‘0’	
-n = Value at POR	‘1’ = Bit is set	‘0’ = Bit is cleared	x = Bit is unknown

bit 15 **HRRDY:** High-Resolution Ready bit
1 = The high-resolution circuitry is ready
0 = The high-resolution circuitry is not ready

bit 14 **HRERR:** High-Resolution Error bit
1 = An error has occurred; PWM signals will have limited resolution
0 = No error has occurred; PWM signals will have full resolution when HRRDY = 1

bit 13-9 **Unimplemented:** Read as ‘0’

bit 8 **LOCK:** Lock bit(1)
1 = Write-protected registers and bits are locked
0 = Write-protected registers and bits are unlocked

bit 7-6 **Unimplemented:** Read as ‘0’

bit 5-4 **DIVSEL<1:0>:** PWM Clock Divider Selection bits
11 = Divide ratio is 1:16
10 = Divide ratio is 1:8
01 = Divide ratio is 1:4
00 = Divide ratio is 1:2

bit 3-2 **Unimplemented:** Read as ‘0’

bit 1-0 **MCLKSEL<1:0>:** PWM Master Clock Selection bits(2)
11 = AF_{PLLO} – Auxiliary PLL post-divider output
10 = F_{PLLO} – Primary PLL post-divider output
01 = $AF_{VCO}/2$ – Auxiliary VCO/2
00 = F_{OSC}

Note 1: A device-specific unlock sequence must be performed before this bit can be cleared.
2: Changing the MCLKSEL<1:0> bits while ON (PGxCONL<15>) = 1 is not recommended.

REGISTER 9-2: FSCL: FREQUENCY SCALE REGISTER

R/W-0	R/W-0	R/W-0	R/W-0	R/W-0	R/W-0	R/W-0	R/W-0
FSCL<15:8>							
bit 15							bit 8

R/W-0	R/W-0	R/W-0	R/W-0	R/W-0	R/W-0	R/W-0	R/W-0
FSCL<7:0>							
bit 7							bit 0

Legend:			
R = Readable bit	W = Writable bit	U = Unimplemented bit, read as ‘0’	
-n = Value at POR	‘1’ = Bit is set	‘0’ = Bit is cleared	x = Bit is unknown

bit 15-0 **FSCL<15:0>:** Frequency Scale Register bits
The value in this register is added to the frequency scaling accumulator at each pwm_clk. When the accumulated value exceeds the value of FSMINPER, a clock pulse is produced.

REGISTER 9-3: FSMINPER: FREQUENCY SCALING MINIMUM PERIOD REGISTER

R/W-0	R/W-0	R/W-0	R/W-0	R/W-0	R/W-0	R/W-0	R/W-0
FSMINPER<15:8>							
bit 15							bit 8

R/W-0	R/W-0	R/W-0	R/W-0	R/W-0	R/W-0	R/W-0	R/W-0
FSMINPER<7:0>							
bit 7							bit 0

Legend:			
R = Readable bit	W = Writable bit	U = Unimplemented bit, read as ‘0’	
-n = Value at POR	‘1’ = Bit is set	‘0’ = Bit is cleared	x = Bit is unknown

bit 15-0 **FSMINPER<15:0>:** Frequency Scaling Minimum Period Register bits
This register holds the minimum clock period (maximum clock frequency) that can be produced by the frequency scaling circuit.

© 2017-2018 Microchip Technology Inc.

REGISTER 9-4: MPHASE: MASTER PHASE REGISTER

R/W-0	R/W-0	R/W-0	R/W-0	R/W-0	R/W-0	R/W-0	R/W-0
MPHASE<15:8>							
bit 15							bit 8

R/W-0	R/W-0	R/W-0	R/W-0	R/W-0	R/W-0	R/W-0	R/W-0
MPHASE<7:0>							
bit 7							bit 0

Legend:			
R = Readable bit	W = Writable bit	U = Unimplemented bit, read as ‘0’	
-n = Value at POR	‘1’ = Bit is set	‘0’ = Bit is cleared	x = Bit is unknown

bit 15-0 **MPHASE<15:0>:** Master Phase Register bits

REGISTER 9-5: MDC: MASTER DUTY CYCLE REGISTER

R/W-0	R/W-0	R/W-0	R/W-0	R/W-0	R/W-0	R/W-0	R/W-0
MDC<15:8>							
bit 15							bit 8

R/W-0	R/W-0	R/W-0	R/W-0	R/W-0	R/W-0	R/W-0	R/W-0
MDC<7:0>							
bit 7							bit 0

Legend:			
R = Readable bit	W = Writable bit	U = Unimplemented bit, read as ‘0’	
-n = Value at POR	‘1’ = Bit is set	‘0’ = Bit is cleared	x = Bit is unknown

bit 15-0 **MDC<15:0>:** Master Duty Cycle Register bits

REGISTER 9-6: MPER: MASTER PERIOD REGISTER

R/W-0	R/W-0	R/W-0	R/W-0	R/W-0	R/W-0	R/W-0	R/W-0
MPER<15:8>(1)							
bit 15							bit 8

R/W-0	R/W-0	R/W-0	R/W-0	R/W-0	R/W-0	R/W-0	R/W-0
MPER<7:0>(1)							
bit 7							bit 0

Legend:			
R = Readable bit	W = Writable bit	U = Unimplemented bit, read as ‘0’	
-n = Value at POR	‘1’ = Bit is set	‘0’ = Bit is cleared	x = Bit is unknown

bit 15-0 **MPER<15:0>:** Master Period Register bits(1)

Note 1: Period values less than ‘`0x0010`’ should not be selected.

© 2017-2018 Microchip Technology Inc.

REGISTER 9-7: CMBTRIGL: COMBINATIONAL TRIGGER REGISTER LOW

U-0	U-0	U-0	U-0	U-0	U-0	U-0	U-0
—	—	—	—	—	—	—	—
bit 15							bit 8

R/W-0	R/W-0	R/W-0	R/W-0	R/W-0	R/W-0	R/W-0	R/W-0
CTA8EN	CTA7EN	CTA6EN	CTA5EN	CTA4EN	CTA3EN	CTA2EN	CTA1EN
bit 7							bit 0

Legend:			
R = Readable bit	W = Writable bit	U = Unimplemented bit, read as ‘0’	
-n = Value at POR	‘1’ = Bit is set	‘0’ = Bit is cleared	x = Bit is unknown

bit 15-8 **Unimplemented:** Read as ‘0’

bit 7 **CTA8EN:** Enable Trigger Output from PWM Generator #8 as Source for Combinational Trigger A bit
1 = Enables specified trigger signal to be OR’d into the Combinatorial Trigger A signal
0 = Disabled

bit 6 **CTA7EN:** Enable Trigger Output from PWM Generator #7 as Source for Combinational Trigger A bit
1 = Enables specified trigger signal to be OR’d into the Combinatorial Trigger A signal
0 = Disabled

bit 5 **CTA6EN:** Enable Trigger Output from PWM Generator #6 as Source for Combinational Trigger A bit
1 = Enables specified trigger signal to be OR’d into the Combinatorial Trigger A signal
0 = Disabled

bit 4 **CTA5EN:** Enable Trigger Output from PWM Generator #5 as Source for Combinational Trigger A bit
1 = Enables specified trigger signal to be OR’d into the Combinatorial Trigger A signal
0 = Disabled

bit 3 **CTA4EN:** Enable Trigger Output from PWM Generator #4 as Source for Combinational Trigger A bit
1 = Enables specified trigger signal to be OR’d into the Combinatorial Trigger A signal
0 = Disabled

bit 2 **CTA3EN:** Enable Trigger Output from PWM Generator #3 as Source for Combinational Trigger A bit
1 = Enables specified trigger signal to be OR’d into the Combinatorial Trigger A signal
0 = Disabled

bit 1 **CTA2EN:** Enable Trigger Output from PWM Generator #2 as Source for Combinational Trigger A bit
1 = Enables specified trigger signal to be OR’d into the Combinatorial Trigger A signal
0 = Disabled

bit 0 **CTA1EN:** Enable Trigger Output from PWM Generator #1 as Source for Combinational Trigger A bit
1 = Enables specified trigger signal to be OR’d into the Combinatorial Trigger A signal
0 = Disabled

REGISTER 9-8: CMBTRIGH: COMBINATIONAL TRIGGER REGISTER HIGH

U-0	U-0	U-0	U-0	U-0	U-0	U-0	U-0
—	—	—	—	—	—	—	—
bit 15							bit 8

R/W-0	R/W-0	R/W-0	R/W-0	R/W-0	R/W-0	R/W-0	R/W-0
CTB8EN	CTB7EN	CTB6EN	CTB5EN	CTB4EN	CTB3EN	CTB2EN	CTB1EN
bit 7							bit 0

Legend:			
R = Readable bit	W = Writable bit	U = Unimplemented bit, read as ‘0’	
-n = Value at POR	‘1’ = Bit is set	‘0’ = Bit is cleared	x = Bit is unknown

bit 15-8 **Unimplemented:** Read as ‘0’

bit 7 **CTB8EN:** Enable Trigger Output from PWM Generator #8 as Source for Combinational Trigger B bit
1 = Enables specified trigger signal to be OR’d into the Combinatorial Trigger B signal
0 = Disabled

bit 6 **CTB7EN:** Enable Trigger Output from PWM Generator #7 as Source for Combinational Trigger B bit
1 = Enables specified trigger signal to be OR’d into the Combinatorial Trigger B signal
0 = Disabled

bit 5 **CTB6EN:** Enable Trigger Output from PWM Generator #6 as Source for Combinational Trigger B bit
1 = Enables specified trigger signal to be OR’d into the Combinatorial Trigger B signal
0 = Disabled

bit 4 **CTB5EN:** Enable Trigger Output from PWM Generator #5 as Source for Combinational Trigger B bit
1 = Enables specified trigger signal to be OR’d into the Combinatorial Trigger B signal
0 = Disabled

bit 3 **CTB4EN:** Enable Trigger Output from PWM Generator #4 as Source for Combinational Trigger B bit
1 = Enables specified trigger signal to be OR’d into the Combinatorial Trigger B signal
0 = Disabled

bit 2 **CTB3EN:** Enable Trigger Output from PWM Generator #3 as Source for Combinational Trigger B bit
1 = Enables specified trigger signal to be OR’d into the Combinatorial Trigger B signal
0 = Disabled

bit 1 **CTB2EN:** Enable Trigger Output from PWM Generator #2 as Source for Combinational Trigger B bit
1 = Enables specified trigger signal to be OR’d into the Combinatorial Trigger B signal
0 = Disabled

bit 0 **CTB1EN:** Enable Trigger Output from PWM Generator #1 as Source for Combinational Trigger B bit
1 = Enables specified trigger signal to be OR’d into the Combinatorial Trigger B signal
0 = Disabled

© 2017-2018 Microchip Technology Inc.

REGISTER 9-9: LOGCONy: COMBINATORIAL PWM LOGIC CONTROL REGISTER y[2]

R/W-0	R/W-0	R/W-0	R/W-0	R/W-0	R/W-0	R/W-0	R/W-0
PWMS1y3[1]	PWMS1y2[1]	PWMS1y1[1]	PWMS1y0[1]	PWMS2y3[1]	PWMS2y2[1]	PWMS2y1[1]	PWMS2y0[1]
bit 15							bit 8

R/W-0	R/W-0	R/W-0	R/W-0	U-0	R/W-0	R/W-0	R/W-0
S1yPOL	S2yPOL	PWMLFy1	PWMLFy0	—	PWMLFyD2	PWMLFyD1	PWMLFyD0
bit 7							bit 0

Legend:			
R = Readable bit	W = Writable bit	U = Unimplemented bit, read as ‘0’	
-n = Value at POR	‘1’ = Bit is set	‘0’ = Bit is cleared	x = Bit is unknown

bit 15-12 **PWMS1y<3:0>:** Combinatorial PWM Logic Source #1 Selection bits[1]
1111 = PWM8L
1110 = PWM8H
1101 = PWM7L
1100 = PWM7H
1011 = PWM6L
1010 = PWM6H
1001 = PWM5L
1000 = PWM5H
0111 = PWM4L
0110 = PWM4H
0101 = PWM3L
0100 = PWM3H
0011 = PWM2L
0010 = PWM2H
0001 = PWM1L
0000 = PWM1H

bit 11-8 **PWMS2y<3:0>:** Combinatorial PWM Logic Source #2 Selection bits[1]
1111 = PWM8L
1110 = PWM8H
1101 = PWM7L
1100 = PWM7H
1011 = PWM6L
1010 = PWM6H
1001 = PWM5L
1000 = PWM5H
0111 = PWM4L
0110 = PWM4H
0101 = PWM3L
0100 = PWM3H
0011 = PWM2L
0010 = PWM2H
0001 = PWM1L
0000 = PWM1H

bit 7 **S1yPOL:** Combinatorial PWM Logic Source #1 Polarity bit
1 = Input is inverted
0 = Input is positive logic

Note 1: Logic function input will be connected to ‘0’ if the PWM channel is not present.
2: ‘y’ denotes a common instance (A-F).

REGISTER 9-9: LOGCONy: COMBINATORIAL PWM LOGIC CONTROL REGISTER y(2) (CONTINUED)

bit 6 **S2yPOL:** Combinatorial PWM Logic Source #2 Polarity bit
1 = Input is inverted
0 = Input is positive logic

bit 5-4 **PWMLFy<1:0>:** Combinatorial PWM Logic Function Selection bits
11 = Reserved
10 = PWMS1 ^ PWMS2 (XOR)
01 = PWMS1 & PWMS2 (AND)
00 = PWMS1 | PWMS2 (OR)

bit 3 **Unimplemented:** Read as '0'

bit 2-0 **PWMLFyD<2:0>:** Combinatorial PWM Logic Destination Selection bits
111 = Logic function is assigned to the PWM8H or PWM8L pin
110 = Logic function is assigned to the PWM7H or PWM7L pin
101 = Logic function is assigned to the PWM6H or PWM6L pin
100 = Logic function is assigned to the PWM5H or PWM5Lpin
011 = Logic function is assigned to the PWM4H or PWM4Lpin
010 = Logic function is assigned to the PWM3H or PWM3Lpin
001 = Logic function is assigned to the PWM2H or PWM2Lpin
000 = No assignment, combinatorial PWM logic function is disabled

Note 1: Logic function input will be connected to '0' if the PWM channel is not present.
2: 'y' denotes a common instance (A-F).

© 2017-2018 Microchip Technology Inc.

REGISTER 9-10: PWMEVTy: PWM EVENT OUTPUT CONTROL REGISTER y[5]

R/W-0	R/W-0	R/W-0	R/W-0	U-0	U-0	U-0	U-0
EVTyOEN	EVTyPOL	EVTySTRD	EVTySYNC	—	—	—	—
bit 15							bit 8

R/W-0	R/W-0	R/W-0	R/W-0	U-0	R/W-0	R/W-0	R/W-0
EVTySEL3	EVTySEL2	EVTySEL1	EVTySEL0	—	EVTyPGS2[2]	EVTyPGS1[2]	EVTyPGS0[2]
bit 7							bit 0

Legend:			
R = Readable bit	W = Writable bit	U = Unimplemented bit, read as ‘0’	
-n = Value at POR	‘1’ = Bit is set	‘0’ = Bit is cleared	x = Bit is unknown

bit 15 **EVTyOEN:** PWM Event Output Enable bit
`1` = Event output signal is output on PWMEVTy pin
`0` = Event output signal is internal only

bit 14 **EVTyPOL:** PWM Event Output Polarity bit
`1` = Event output signal is active-low
`0` = Event output signal is active-high

bit 13 **EVTySTRD:** PWM Event Output Stretch Disable bit
`1` = Event output signal pulse width is not stretched
`0` = Event output signal is stretched to 8 PWM clock cycles minimum[1]

bit 12 **EVTySYNC:** PWM Event Output Sync bit
`1` = Event output signal is synchronized to the system clock
`0` = Event output is not synchronized to the system clock
Event output signal pulse will be two system clocks when this bit is set and EVTySTRD = `1`.

bit 11-8 **Unimplemented:** Read as ‘`0`’

bit 7-4 **EVTySEL<3:0>:** PWM Event Selection bits
`1111` = High-resolution error event signal
`1110-1010` = Reserved
`1001` = ADC Trigger 2 signal
`1000` = ADC Trigger 1 signal
`0111` = STEER signal (available in Push-Pull Output modes only)[4]
`0110` = CAHALF signal (available in Center-Aligned modes only)[4]
`0101` = PCI Fault active output signal
`0100` = PCI current-limit active output signal
`0011` = PCI feed-forward active output signal
`0010` = PCI Sync active output signal
`0001` = PWM Generator output signal[3]
`0000` = Source is selected by the PGTRGSEL<2:0> bits

bit 3 **Unimplemented:** Read as ‘`0`’

Note 1: The event signal is stretched using the peripheral clock because different PGs may be operating from different clock sources. The leading edge of the event pulse is produced in the clock domain of the PWM Generator. The trailing edge of the stretched event pulse is produced in the peripheral clock domain.
2: No event will be produced if the selected PWM Generator is not present.
3: This is the PWM Generator output signal prior to output mode logic and any output override logic.
4: This signal should be the PGx_clk domain signal prior to any synchronization into the system clock domain.
5: ‘y’ denotes a common instance (A-F).

REGISTER 9-10: PWMEVTy: PWM EVENT OUTPUT CONTROL REGISTER y(5) (CONTINUED)

bit 2-0 **EVTyPGS<2:0>:** PWM Event Source Selection bits(2)

111 = PG8
110 = PG7
101 = PG6
100 = PG5
011 = PG4
010 = PG3
001 = PG2
000 = PG1

Note 1: The event signal is stretched using the peripheral clock because different PGs may be operating from different clock sources. The leading edge of the event pulse is produced in the clock domain of the PWM Generator. The trailing edge of the stretched event pulse is produced in the peripheral clock domain.

2: No event will be produced if the selected PWM Generator is not present.

3: This is the PWM Generator output signal prior to output mode logic and any output override logic.

4: This signal should be the PGx_clk domain signal prior to any synchronization into the system clock domain.

5: ‘y’ denotes a common instance (A-F).

© 2017-2018 Microchip Technology Inc.

REGISTER 9-11: LFSR: LINEAR FEEDBACK SHIFT REGISTER

U-0	R/W-0	R/W-0	R/W-0	R/W-0	R/W-0	R/W-0	R/W-0
—	LFSR<14:8>						
bit 15							bit 8

R/W-0	R/W-0	R/W-0	R/W-0	R/W-0	R/W-0	R/W-0	R/W-0
LFSR<7:0>							
bit 7							bit 0

Legend:			
R = Readable bit	W = Writable bit	U = Unimplemented bit, read as ‘0’	
-n = Value at POR	‘1’ = Bit is set	‘0’ = Bit is cleared	x = Bit is unknown

bit 15 **Unimplemented:** Read as ‘0’

bit 14-0 **LFSR<14:0>:** Linear Feedback Shift Register bits
A read of this register will provide a 15-bit pseudorandom value.

REGISTER 9-12: PGxCONL: PWM GENERATOR x CONTROL REGISTER LOW

R/W-0	r-0	U-0	U-0	U-0	R/W-0	R/W-0	R/W-0
ON	—	—	—	—	TRGCNT2	TRGCNT1	TRGCNT0
bit 15							bit 8

R/W-0	U-0	U-0	R/W-0	R/W-0	R/W-0	R/W-0	R/W-0
HREN	—	—	CLKSEL1	CLKSEL0	MODSEL2	MODSEL1	MODSEL0
bit 7							bit 0

Legend:	r = Reserved bit		
R = Readable bit	W = Writable bit	U = Unimplemented bit, read as ‘0’	
-n = Value at POR	‘1’ = Bit is set	‘0’ = Bit is cleared	x = Bit is unknown

bit 15 **ON:** Enable bit
`1` = PWM Generator is enabled
`0` = PWM Generator is not enabled

bit 14 **Reserved:** Maintain as ‘`0`’

bit 13-11 **Unimplemented:** Read as ‘`0`’

bit 10-8 **TRGCNT<2:0>:** Trigger Count Select bits
`111` = PWM Generator produces 8 PWM cycles after triggered
`110` = PWM Generator produces 7 PWM cycles after triggered
`101` = PWM Generator produces 6 PWM cycles after triggered
`100` = PWM Generator produces 5 PWM cycles after triggered
`011` = PWM Generator produces 4 PWM cycles after triggered
`010` = PWM Generator produces 3 PWM cycles after triggered
`001` = PWM Generator produces 2 PWM cycles after triggered
`000` = PWM Generator produces 1 PWM cycle after triggered

bit 7 **HREN:** PWM Generator x High-Resolution Enable bit
`1` = PWM Generator x operates in High-Resolution mode
`0` = PWM Generator x operates in standard resolution

bit 6-5 **Unimplemented:** Read as ‘`0`’

bit 4-3 **CLKSEL<1:0>:** Clock Selection bits
`11` = PWM Generator uses Master clock scaled by frequency scaling circuit(1)
`10` = PWM Generator uses Master clock divided by clock divider circuit(1)
`01` = PWM Generator uses Master clock selected by the MCLKSEL<1:0> (PCLKCON<1:0>) control bits
`00` = No clock selected, PWM Generator is in lowest power state (default)

bit 2-0 **MODSEL<2:0>:** Mode Selection bits
`111` = Dual Edge Center-Aligned PWM mode (interrupt/register update twice per cycle)
`110` = Dual Edge Center-Aligned PWM mode (interrupt/register update once per cycle)
`101` = Double-Update Center-Aligned PWM mode
`100` = Center-Aligned PWM mode
`011` = Reserved
`010` = Independent Edge PWM mode, dual output
`001` = Variable Phase PWM mode
`000` = Independent Edge PWM mode

Note 1: The PWM Generator time base operates from the frequency scaling circuit clock, effectively scaling the duty cycle and period of the PWM Generator output.

© 2017-2018 Microchip Technology Inc.

REGISTER 9-13: PGxCONH: PWM GENERATOR x CONTROL REGISTER HIGH

R/W-0	R/W-0	R/W-0	U-0	R/W-0	R/W-0	R/W-0	R/W-0
MDCSEL	MPERSEL	MPHSEL	—	MSTEN	UPDMOD2	UPDMOD1	UPDMOD0
bit 15							bit 8

U-0	R/W-0	U-0	U-0	R/W-0	R/W-0	R/W-0	R/W-0
—	TRGMOD	—	—	SOCS3(1,2,3)	SOCS2(1,2,3)	SOCS1(1,2,3)	SOCS0(1,2,3)
bit 7							bit 0

Legend:			
R = Readable bit	W = Writable bit	U = Unimplemented bit, read as ‘0’	
-n = Value at POR	‘1’ = Bit is set	‘0’ = Bit is cleared	x = Bit is unknown

bit 15 **MDCSEL:** Master Duty Cycle Register Select bit
1 = PWM Generator uses the MDC register instead of PGxDC
0 = PWM Generator uses the PGxDC register

bit 14 **MPERSEL:** Master Period Register Select bit
1 = PWM Generator uses the MPER register instead of PGxPER
0 = PWM Generator uses the PGxPER register

bit 13 **MPHSEL:** Master Phase Register Select bit
1 = PWM Generator uses the MPHASE register instead of PGxPHASE
0 = PWM Generator uses the PGxPHASE register

bit 12 **Unimplemented:** Read as ‘0’

bit 11 **MSTEN:** Master Update Enable bit
1 = PWM Generator broadcasts software set/clear of the UPDATE status bit and EOC signal to other PWM Generators
0 = PWM Generator does not broadcast the UPDATE status bit state or EOC signal

bit 10-8 **UPDMOD<2:0>:** PWM Buffer Update Mode Selection bits
011 = Slaved immediate update
Data registers immediately, or as soon as possible, when a Master update request is received. A Master update request will be transmitted if MSTEN = 1 and UPDATE = 1 for the requesting PWM Generator.
010 = Slaved SOC update
Data registers at start of next cycle if a Master update request is received. A Master update request will be transmitted if MSTEN = 1 and UPDATE = 1 for the requesting PWM Generator.
001 = Immediate update
Data registers immediately, or as soon as possible, if UPDATE = 1. The UPDATE status bit will be cleared automatically after the update occurs (UPDATE = 1). The UPDATE status bit will be cleared automatically after the update occurs.
000 = SOC update
Data registers at start of next PWM cycle.

bit 7 **Unimplemented:** Read as ‘0’

Note 1: The PCI selected Sync signal is always available to be OR’d with the selected SOC signal per the SOCS<3:0> bits if the PCI Sync function is enabled.

2: The source selected by the SOCS<3:0> bits MUST operate from the same clock source as the local PWM Generator. If not, the source must be routed through the PCI Sync logic so the trigger signal may be synchronized to the PWM Generator clock domain.

3: PWM Generators are grouped into groups of four: PG1-PG4 and PG5-PG8, if available. Any generator within a group of four may be used to trigger another generator within the same group.

REGISTER 9-13: PGxCONH: PWM GENERATOR x CONTROL REGISTER HIGH (CONTINUED)

bit 6 **TRGMOD:** PWM Generator Trigger Mode Selection bit
1 = PWM Generator operates in Retriggerable mode
0 = PWM Generator operates in Single Trigger mode

bit 5-4 **Unimplemented:** Read as '0'

bit 3-0 **SOCS<3:0>:** Start-of-Cycle Selection bits(1,2,3)
1111 = TRIG bit or PCI Sync function only (no hardware trigger source is selected)
1110-0101 = Reserved
0100 = PWM4(8) PG1 or PG5 trigger output selected by PGTRGSEL<2:0> (PGxEVT<2:0>)
0011 = PWM3(7) PG1 or PG5 trigger output selected by PGTRGSEL<2:0> (PGxEVT<2:0>)
0010 = PWM2(6) PG1 or PG5 trigger output selected by PGTRGSEL<2:0> (PGxEVT<2:0>)
0001 = PWM1(5) PG1 or PG5 trigger output selected by PGTRGSEL<2:0> (PGxEVT<2:0>)
0000 = Local EOC – PWM Generator is self-triggered

Note 1: The PCI selected Sync signal is always available to be OR'd with the selected SOC signal per the SOCS<3:0> bits if the PCI Sync function is enabled.

2: The source selected by the SOCS<3:0> bits MUST operate from the same clock source as the local PWM Generator. If not, the source must be routed through the PCI Sync logic so the trigger signal may be synchronized to the PWM Generator clock domain.

3: PWM Generators are grouped into groups of four: PG1-PG4 and PG5-PG8, if available. Any generator within a group of four may be used to trigger another generator within the same group.

© 2017-2018 Microchip Technology Inc.

REGISTER 9-14: PGxSTAT: PWM GENERATOR x STATUS REGISTER

HS/C-0	HS/C-0	HS/C-0	HS/C-0	R-0	R-0	R-0	R-0
SEVT	FLTEVT	CLEVT	FFEVT	SACT	FLTACT	CLACT	FFACT
bit 15							bit 8

W-0	W-0	HS/R/W-0	R-0	W-0	R-0	R-0	R-0
TRSET	TRCLR	CAP(1)	UPDATE	UPDREQ	STEER	CAHALF	TRIG
bit 7							bit 0

Legend:	C = Clearable bit	HS = Hardware Settable bit	
R = Readable bit	W = Writable bit	‘0’ = Bit is cleared	x = Bit is unknown
-n = Value at POR	‘1’ = Bit is set	U = Unimplemented bit, read as ‘0’	

bit 15 **SEVT:** PCI Sync Event bit
- 1 = A PCI Sync event has occurred (rising edge on PCI Sync output or PCI Sync output is high when module is enabled)
- 0 = No PCI Sync event has occurred

bit 14 **FLTEVT:** PCI Fault Active Status bit
- 1 = A Fault event has occurred (rising edge on PCI Fault output or PCI Fault output is high when module is enabled)
- 0 = No Fault event has occurred

bit 13 **CLEVT:** PCI Current-Limit Status bit
- 1 = A PCI current-limit event has occurred (rising edge on PCI current-limit output or PCI current-limit output is high when module is enabled)
- 0 = No PCI current-limit event has occurred

bit 12 **FFEVT:** PCI Feed-Forward Active Status bit
- 1 = A PCI feed-forward event has occurred (rising edge on PCI feed-forward output or PCI feed-forward output is high when module is enabled)
- 0 = No PCI feed-forward event has occurred

bit 11 **SACT:** PCI Sync Status bit
- 1 = PCI Sync output is active
- 0 = PCI Sync output is inactive

bit 10 **FLTACT:** PCI Fault Active Status bit
- 1 = PCI Fault output is active
- 0 = PCI Fault output is inactive

bit 9 **CLACT:** PCI Current-Limit Status bit
- 1 = PCI current-limit output is active
- 0 = PCI current-limit output is inactive

bit 8 **FFACT:** PCI Feed-Forward Active Status bit
- 1 = PCI feed-forward output is active
- 0 = PCI feed-forward output is inactive

bit 7 **TRSET:** PWM Generator Software Trigger Set bit

User software writes a ‘1’ to this bit location to trigger a PWM Generator cycle. The bit location always reads as ‘0’. The TRIG bit will indicate ‘1’ when the PWM Generator is triggered.

bit 6 **TRCLR:** PWM Generator Software Trigger Clear bit

User software writes a ‘1’ to this bit location to stop a PWM Generator cycle. The bit location always reads as ‘0’. The TRIG bit will indicate ‘0’ when the PWM Generator is not triggered.

Note 1: User software may write a ‘1’ to CAP as a request to initiate a software capture. The CAP status bit will be set when the capture event has occurred. No further captures will occur until CAP is cleared by software.

REGISTER 9-14: PGxSTAT: PWM GENERATOR x STATUS REGISTER (CONTINUED)

bit 5 **CAP:** Capture Status bit[1]

1 = PWM Generator time base value has been captured in PGxCAP
0 = No capture has occurred

bit 4 **UPDATE:** PWM Data Register Update Status/Control bit

1 = PWM Data register update is pending – user Data registers are not writable
0 = No PWM Data register update is pending

bit 3 **UPDREQ:** PWM Data Register Update Request bit

User software writes a '1' to this bit location to request a PWM Data register update. The bit location always reads as '0'. The UPDATE status bit will indicate '1' when an update is pending.

bit 2 **STEER:** Output Steering Status bit (Push-Pull Output mode only)

1 = PWM Generator is in 2nd cycle of Push-Pull mode
0 = PWM Generator is in 1st cycle of Push-Pull mode

bit 1 **CAHALF:** Half Cycle Status bit (Center-Aligned modes only)

1 = PWM Generator is in 2nd half of time base cycle
0 = PWM Generator is in 1st half of time base cycle

bit 0 **TRIG:** PWM Trigger Status bit

1 = PWM Generator is triggered and PWM cycle is in progress
0 = No PWM cycle is in progress

Note 1: User software may write a '1' to CAP as a request to initiate a software capture. The CAP status bit will be set when the capture event has occurred. No further captures will occur until CAP is cleared by software.

© 2017-2018 Microchip Technology Inc.

REGISTER 9-15: PGxIOCONL: PWM GENERATOR x I/O CONTROL REGISTER LOW

R/W-0	R/W-0	R/W-0	R/W-0	R/W-0	R/W-0	R/W-0	R/W-0
CLMOD	SWAP	OVRENH	OVRENL	OVRDAT1	OVRDAT0	OSYNC1	OSYNC0
bit 15							bit 8

R/W-0	R/W-0	R/W-0	R/W-0	R/W-0	R/W-0	R/W-0	R/W-0
FLTDAT1	FLTDAT0	CLDAT1	CLDAT0	FFDAT1	FFDAT0	DBDAT1	DBDAT0
bit 7							bit 0

Legend:			
R = Readable bit	W = Writable bit	U = Unimplemented bit, read as ‘0’	
-n = Value at POR	‘1’ = Bit is set	‘0’ = Bit is cleared	x = Bit is unknown

bit 15 **CLMOD:** Current-Limit Mode Select bit
1 = If PCI current limit is active, then the PWMxH and PWMxL output signals are inverted (bit flipping), and the CLDAT<1:0> bits are not used
0 = If PCI current limit is active, then the CLDAT<1:0> bits define the PWM output levels

bit 14 **SWAP:** Swap PWM Signals to PWMxH and PWMxL Device Pins bit
1 = The PWMxH signal is connected to the PWMxL pin and the PWMxL signal is connected to the PWMxH pin
0 = PWMxH/L signals are mapped to their respective pins

bit 13 **OVRENH:** User Override Enable for PWMxH Pin bit
1 = OVRDAT1 provides data for output on the PWMxH pin
0 = PWM Generator provides data for the PWMxH pin

bit 12 **OVRENL:** User Override Enable for PWMxL Pin bit
1 = OVRDAT0 provides data for output on the PWMxL pin
0 = PWM Generator provides data for the PWMxL pin

bit 11-10 **OVRDAT<1:0>:** Data for PWMxH/PWMxL Pins if Override is Enabled bits
If OVERENH = 1, then OVRDAT1 provides data for PWMxH.
If OVERENL = 1, then OVRDAT0 provides data for PWMxL.

bit 9-8 **OSYNC<1:0>:** User Output Override Synchronization Control bits
11 = Reserved
10 = User output overrides via the OVRENH/L and OVRDAT<1:0> bits occur when specified by the UPDMOD<2:0> bits in the PGxCONH register
01 = User output overrides via the OVRENH/L and OVRDAT<1:0> bits occur immediately (as soon as possible)
00 =User output overrides via the OVRENH/L and OVRDAT<1:0> bits are synchronized to the local PWM time base (next Start-of-Cycle)

bit 7-6 **FLTDAT<1:0>:** Data for PWMxH/PWMxL Pins if Fault Event is Active bits
If Fault is active, then FLTDAT1 provides data for PWMxH.
If Fault is active, then FLTDAT0 provides data for PWMxL.

bit 5-4 **CLDAT<1:0>:** Data for PWMxH/PWMxL Pins if Current-Limit Event is Active bits
If current limit is active, then CLDAT1 provides data for PWMxH.
If current limit is active, then CLDAT0 provides data for PWMxL.

bit 3-2 **FFDAT<1:0>:** Data for PWMxH/PWMxL Pins if Feed-Forward Event is Active bits
If feed-forward is active, then FFDAT1 provides data for PWMxH.
If feed-forward is active, then FFDAT0 provides data for PWMxL.

bit 1-0 **DBDAT<1:0>:** Data for PWMxH/PWMxL Pins if Debug Mode is Active and PTFRZ = 1 bits
If Debug mode is active and PTFRZ = 1, then DBDAT1 provides data for PWMxH.
If Debug mode is active and PTFRZ = 1, then DBDAT0 provides data for PWMxL.

REGISTER 9-16: PGxIOCONH: PWM GENERATOR x I/O CONTROL REGISTER HIGH

U-0	R/W-0	R/W-0	R/W-0	U-0	U-0	U-0	R/W-0
—	CAPSRC2(1)	CAPSRC1(1)	CAPSRC0(1)	—	—	—	DTCMPSEL
bit 15							bit 8

U-0	U-0	R/W-0	R/W-0	R/W-0	R/W-0	R/W-0	R/W-0
—	—	PMOD1	PMOD0	PENH	PENL	POLH	POLL
bit 7							bit 0

Legend:			
R = Readable bit	W = Writable bit	U = Unimplemented bit, read as ‘0’	
-n = Value at POR	‘1’ = Bit is set	‘0’ = Bit is cleared	x = Bit is unknown

bit 15 **Unimplemented:** Read as ‘0’

bit 14-12 **CAPSRC<2:0>:** Time Base Capture Source Selection bits(1)
- 111 = Reserved
- 110 = Reserved
- 101 = Reserved
- 100 = Capture time base value at assertion of selected PCI Fault signal
- 011 = Capture time base value at assertion of selected PCI current-limit signal
- 010 = Capture time base value at assertion of selected PCI feed-forward signal
- 001 = Capture time base value at assertion of selected PCI Sync signal
- 000 = No hardware source selected for time base capture – software only

bit 11-9 **Unimplemented:** Read as ‘0’

bit 8 **DTCMPSEL:** Dead-Time Compensation Select bit
- 1 = Dead-time compensation is controlled by PCI feed-forward limit logic
- 0 = Dead-time compensation is controlled by PCI Sync logic

bit 7-6 **Unimplemented:** Read as ‘0’

bit 5-4 **PMOD<1:0>:** PWM Generator Output Mode Selection bits
- 11 = Reserved
- 10 = PWM Generator outputs operate in Push-Pull mode
- 01 = PWM Generator outputs operate in Independent mode
- 00 = PWM Generator outputs operate in Complementary mode

bit 3 **PENH:** PWMxH Output Port Enable bit
- 1 = PWM Generator controls the PWMxH output pin
- 0 = PWM Generator does not control the PWMxH output pin

bit 2 **PENL:** PWMxL Output Port Enable bit
- 1 = PWM Generator controls the PWMxL output pin
- 0 = PWM Generator does not control the PWMxL output pin

bit 1 **POLH:** PWMxH Output Polarity bit
- 1 = Output pin is active-low
- 0 = Output pin is active-high

bit 0 **POLL:** PWMxL Output Polarity bit
- 1 = Output pin is active-low
- 0 = Output pin is active-high

Note 1: A capture may be initiated in software at any time by writing a ‘1’ to CAP (PGxSTAT<5>).

© 2017-2018 Microchip Technology Inc.

REGISTER 9-17: PGxyPCIL: PWM GENERATOR xy PCI REGISTER LOW (x = PWM GENERATOR #; y = F, CL, FF OR S)

R/W-0	R/W-0	R/W-0	R/W-0	U-0	R/W-0	R/W-0	R/W-0
TSYNCDIS	TERM2	TERM1	TERM0	AQPS	AQSS2	AQSS1	AQSS0
bit 15							bit 8

R/W-0	R/W-0	R/W-0	R/W-0	R/W-0	R/W-0	R/W-0	R/W-0
SWTERM	PSYNC	PPS	PSS4	PSS3	PSS2	PSS1	PSS0
bit 7							bit 0

Legend:			
R = Readable bit	W = Writable bit	U = Unimplemented bit, read as ‘0’	
-n = Value at POR	‘1’ = Bit is set	‘0’ = Bit is cleared	x = Bit is unknown

bit 15 **TSYNCDIS:** Termination Synchronization Disable bit
`1` = Termination of latched PCI occurs immediately
`0` = Termination of latched PCI occurs at PWM EOC

bit 14-12 **TERM<2:0>:** Termination Event Selection bits
`111` = Selects PCI Source #9
`110` = Selects PCI Source #8
`101` = Selects PCI Source #1 (PWM Generator output selected by the PWMPCI<2:0> bits)
`100` = PGxTRIGC trigger event
`011` = PGxTRIGB trigger event
`010` = PGxTRIGA trigger event
`001` = Auto-Terminate: Terminate when PCI source transitions from active to inactive
`000` = Manual Terminate: Terminate on a write of ‘`1`’ to the SWTERM bit location

bit 11 **AQPS:** Acceptance Qualifier Polarity Select bit
`1` = Inverted
`0` = Not inverted

bit 10-8 **AQSS<2:0>:** Acceptance Qualifier Source Selection bits
`111` = SWPCI control bit only (qualifier forced to ‘`0`’)
`110` = Selects PCI Source #9
`101` = Selects PCI Source #8
`100` = Selects PCI Source #1 (PWM Generator output selected by the PWMPCI<2:0> bits)
`011` = PWM Generator is triggered
`010` = LEB is active
`001` = Duty cycle is active (base PWM Generator signal)
`000` = No acceptance qualifier is used (qualifier forced to ‘`1`’)

bit 7 **SWTERM:** PCI Software Termination bit
A write of ‘`1`’ to this location will produce a termination event. This bit location always reads as ‘`0`’.

bit 6 **PSYNC:** PCI Synchronization Control bit
`1` = PCI source is synchronized to PWM EOC
`0` = PCI source is not synchronized to PWM EOC

bit 5 **PPS:** PCI Polarity Select bit
`1` = Inverted
`0` = Not inverted

REGISTER 9-17: PGxyPCIL: PWM GENERATOR xy PCI REGISTER LOW (x = PWM GENERATOR #; y = F, CL, FF OR S) (CONTINUED)

bit 4-0 **PSS<4:0>:** PCI Source Selection bits

For Master:

11111 = Master CLC1
11110 = Slave Comparator 3 output
11101 = Slave Comparator 2 output
11100 = Slave Comparator 1 output
11011 = Master Comparator 1 output
11010 = Slave PWM Event F
11001 = Slave PWM Event E
11000 = Slave PWM Event D
10111 = Slave PWM Event C
10110 = Device pin, PCI<22>
10101 = Device pin, PCI<21>
10100 = Device pin, PCI<20>
10011 = Device pin, PCI<19>
10010 = Master RPn input, Master PCI18R
10001 = Master RPn input, Master PCI17R
10000 = Master RPn input, Master PCI16R
01111 = Master RPn input, Master PCI15R
01110 = Master RPn input, Master PCI14R
01101 = Master RPn input, Master PCI13R
01100 = Master RPn input, Master PCI12R
01011 = Master RPn input, Master PCI11R
01010 = Master RPn input, Master PCI10R
01001 = Master RPn input, Master PCI9R
01000 = Master RPn input, Master PCI8R
00111 = Reserved
00110 = Reserved
00101 = Reserved
00100 = Reserved
00011 = Internally connected to Combo Trigger B
00010 = Internally connected to Combo Trigger A
00001 = Internally connected to the output of PWMPCI<2:0> MUX
00000 = Tied to ‘0’

© 2017-2018 Microchip Technology Inc.

REGISTER 9-17: PGxyPCIL: PWM GENERATOR xy PCI REGISTER LOW (x = PWM GENERATOR #; y = F, CL, FF OR S) (CONTINUED)

For Slave:

PWM_PCI<n> Source

00111 = Reserved
00110 = Reserved
00101 = Reserved
00100 = Reserved
00011 = Internally connected to Combo Trigger B
00010 = Internally connected to Combo Trigger A
00001 = Internally connected to the output of PWMPCI<2:0> MUX
00000 = Internally connect to ‘1′b0’
11111 = Slave CLC1
11110 = Slave Comparator Output 3
11101 = Slave Comparator Output 2
11100 = Slave Comparator Output 1
11011 = Master Comparator Output 1
11010 = Master PWM Event F
11001 = Master PWM Event E
11000 = Master PWM Event D
10111 = Master PWM Event C
10110 = PCI<22> device pin device none PCI<22>
10101 = PCI<21> device pin device none PCI<21>
10100 = PCI<20> device pin device none PCI<20>
10011 = Device pin device none PCI<19>
10010 = Slave S1RPn input Slave PCI18R
10001 = Slave S1RPn input Slave PCI17R
10000 = Slave S1RPn input Slave PCI16R
01111 = Slave S1RPn input Slave PCI15R
01110 = Slave S1RPn input Slave PCI14R
01101 = Slave S1RPn input Slave PCI13R
01100 = Slave S1RPn input Slave PCI12R
01011 = Slave S1RPn input Slave PCI11R
01010 = Slave S1RPn input Slave PCI10R
01001 = Slave S1RPn input Slave PCI9R
01000 = Slave S1RPn input Slave PCI8R

REGISTER 9-18: PGxyPCIH: PWM GENERATOR xy PCI REGISTER HIGH (x = PWM GENERATOR #; y = F, CL, FF OR S)

R/W-0	R/W-0	R/W-0	R/W-0	U-0	R/W-0	R/W-0	R/W-0
BPEN	BPSEL2(1)	BPSEL1(1)	BPSEL0(1)	—	ACP2	ACP1	ACP0
bit 15							bit 8

R/W-0	R/W-0	R/W-0	R/W-0	R/W-0	R/W-0	R/W-0	R/W-0
SWPCI	SWPCIM1	SWPCIM0	LATMOD	TQPS	TQSS2	TQSS1	TQSS0
bit 7							bit 0

Legend:			
R = Readable bit	W = Writable bit	U = Unimplemented bit, read as ‘0’	
-n = Value at POR	‘1’ = Bit is set	‘0’ = Bit is cleared	x = Bit is unknown

bit 15 **BPEN:** PCI Bypass Enable bit
- 1 = PCI function is enabled and local PCI logic is bypassed; PWM Generator will be controlled by PCI function in the PWM Generator selected by the BPSEL<2:0> bits
- 0 = PCI function is not bypassed

bit 14-12 **BPSEL<2:0>:** PCI Bypass Source Selection bits(1)
- 111 = PCI control is sourced from PWM Generator 8 PCI logic when BPEN = 1
- 110 = PCI control is sourced from PWM Generator 7 PCI logic when BPEN = 1
- 101 = PCI control is sourced from PWM Generator 6 PCI logic when BPEN = 1
- 100 = PCI control is sourced from PWM Generator 5 PCI logic when BPEN = 1
- 011 = PCI control is sourced from PWM Generator 4 PCI logic when BPEN = 1
- 010 = PCI control is sourced from PWM Generator 3 PCI logic when BPEN = 1
- 001 = PCI control is sourced from PWM Generator 2 PCI logic when BPEN = 1
- 000 = PCI control is sourced from PWM Generator 1 PCI logic when BPEN = 1

bit 11 **Unimplemented:** Read as ‘0’

bit 10-8 **ACP<2:0>:** PCI Acceptance Criteria Selection bits
- 111 = Reserved
- 110 = Reserved
- 101 = Latched any edge
- 100 = Latched rising edge
- 011 = Latched
- 010 = Any edge
- 001 = Rising edge
- 000 = Level-sensitive

bit 7 **SWPCI:** Software PCI Control bit
- 1 = Drives a ‘1’ to PCI logic assigned to by the SWPCIM<1:0> control bits
- 0 = Drives a ‘0’ to PCI logic assigned to by the SWPCIM<1:0> control bits

bit 6-5 **SWPCIM<1:0>:** Software PCI Control Mode bits
- 11 = Reserved
- 10 = SWPCI bit is assigned to termination qualifier logic
- 01 = SWPCI bit is assigned to acceptance qualifier logic
- 00 = SWPCI bit is assigned to PCI acceptance logic

bit 4 **LATMOD:** PCI SR Latch Mode bit
- 1 = SR latch is Reset-dominant in Latched Acceptance modes
- 0 = SR latch is Set-dominant in Latched Acceptance modes

Note 1: Selects ‘0’ if selected PWM Generator is not present.

© 2017-2018 Microchip Technology Inc.

REGISTER 9-18: PGxyPCIH: PWM GENERATOR xy PCI REGISTER HIGH (x = PWM GENERATOR #; y = F, CL, FF OR S) (CONTINUED)

bit 3 **TQPS:** Termination Qualifier Polarity Select bit
1 = Inverted
0 = Not inverted

bit 2-0 **TQSS<2:0>:** Termination Qualifier Source Selection bits
111 = SWPCI control bit only (qualifier forced to ‘0’)
110 = Selects PCI Source #9
101 = Selects PCI Source #8
100 = Selects PCI Source #1 (PWM Generator output selected by the PWMPCI<2:0> bits)
011 = PWM Generator is triggered
010 = LEB is active
001 = Duty cycle is active (base PWM Generator signal)
000 = No termination qualifier used (qualifier forced to ‘1’)

Note 1: Selects ‘0’ if selected PWM Generator is not present.

REGISTER 9-19: PGxEVTL: PWM GENERATOR x EVENT REGISTER LOW

R/W-0	R/W-0	R/W-0	R/W-0	R/W-0	R/W-0	R/W-0	R/W-0
ADTR1PS4	ADTR1PS3	ADTR1PS2	ADTR1PS1	ADTR1PS0	ADTR1EN3	ADTR1EN2	ADTR1EN1
bit 15							bit 8

U-0	U-0	U-0	R/W-0	R/W-0	R/W-0	R/W-0	R/W-0
—	—	—	UPDTRG1	UPDTRG0	PGTRGSEL2(1)	PGTRGSEL1(1)	PGTRGSEL0(1)
bit 7							bit 0

Legend:			
R = Readable bit	W = Writable bit	U = Unimplemented bit, read as ‘0’	
-n = Value at POR	‘1’ = Bit is set	‘0’ = Bit is cleared	x = Bit is unknown

bit 15-11 **ADTR1PS<4:0>:** ADC Trigger 1 Postscaler Selection bits
11111 = 1:32
...
00010 = 1:3
00001 = 1:2
00000 = 1:1

bit 10 **ADTR1EN3:** ADC Trigger 1 Source is PGxTRIGC Compare Event Enable bit
1 = PGxTRIGC register compare event is enabled as trigger source for ADC Trigger 1
0 = PGxTRIGC register compare event is disabled as trigger source for ADC Trigger 1

bit 9 **ADTR1EN2:** ADC Trigger 1 Source is PGxTRIGB Compare Event Enable bit
1 = PGxTRIGB register compare event is enabled as trigger source for ADC Trigger 1
0 = PGxTRIGB register compare event is disabled as trigger source for ADC Trigger 1

bit 8 **ADTR1EN1:** ADC Trigger 1 Source is PGxTRIGA Compare Event Enable bit
1 = PGxTRIGA register compare event is enabled as trigger source for ADC Trigger 1
0 = PGxTRIGA register compare event is disabled as trigger source for ADC Trigger 1

bit 7-5 **Unimplemented:** Read as ‘0’

bit 4-3 **UPDTRG<1:0>:** Update Trigger Select bits
11 = A write of the PGxTRIGA register automatically sets the UPDATE bit
10 = A write of the PGxPHASE register automatically sets the UPDATE bit
01 = A write of the PGxDC register automatically sets the UPDATE bit
00 = User must set the UPDATE bit (PGxSTAT<4>) manually

bit 2-0 **PGTRGSEL<2:0>:** PWM Generator Trigger Output Selection bits(1)
111 = Reserved
110 = Reserved
101 = Reserved
100 = Reserved
011 = PGxTRIGC compare event is the PWM Generator trigger
010 = PGxTRIGB compare event is the PWM Generator trigger
001 = PGxTRIGA compare event is the PWM Generator trigger
000 = EOC event is the PWM Generator trigger

Note 1: These events are derived from the internal PWM Generator time base comparison events.

© 2017-2018 Microchip Technology Inc.

REGISTER 9-20: PGxEVTH: PWM GENERATOR x EVENT REGISTER HIGH

R/W-0	R/W-0	R/W-0	R/W-0	U-0	U-0	R/W-0	R/W-0
FLTIEN(1)	CLIEN(2)	FFIEN(3)	SIEN(4)	—	—	IEVTSEL1	IEVTSEL0
bit 15							bit 8

R/W-0	R/W-0	R/W-0	R/W-0	R/W-0	R/W-0	R/W-0	R/W-0
ADTR2EN3	ADTR2EN2	ADTR2EN1	ADTR1OFS4	ADTR1OFS3	ADTR1OFS2	ADTR1OFS1	ADTR1OFS0
bit 7							bit 0

Legend:			
R = Readable bit	W = Writable bit	U = Unimplemented bit, read as ‘0’	
-n = Value at POR	‘1’ = Bit is set	‘0’ = Bit is cleared	x = Bit is unknown

bit 15 **FLTIEN:** PCI Fault Interrupt Enable bit(1)
- 1 = Fault interrupt is enabled
- 0 = Fault interrupt is disabled

bit 14 **CLIEN:** PCI Current-Limit Interrupt Enable bit(2)
- 1 = Current-limit interrupt is enabled
- 0 = Current-limit interrupt is disabled

bit 13 **FFIEN:** PCI Feed-Forward Interrupt Enable bit(3)
- 1 = Feed-forward interrupt is enabled
- 0 = Feed-forward interrupt is disabled

bit 12 **SIEN:** PCI Sync Interrupt Enable bit(4)
- 1 = Sync interrupt is enabled
- 0 = Sync interrupt is disabled

bit 11-10 **Unimplemented:** Read as ‘0’

bit 9-8 **IEVTSEL<1:0>:** Interrupt Event Selection bits
- 11 = Time base interrupts are disabled (Sync, Fault, current-limit and feed-forward events can be independently enabled)
- 10 = Interrupts CPU at ADC Trigger 1 event
- 01 = Interrupts CPU at TRIGA compare event
- 00 = Interrupts CPU at EOC

bit 7 **ADTR2EN3:** ADC Trigger 2 Source is PGxTRIGC Compare Event Enable bit
- 1 = PGxTRIGC register compare event is enabled as trigger source for ADC Trigger 2
- 0 = PGxTRIGC register compare event is disabled as trigger source for ADC Trigger 2

bit 6 **ADTR2EN2:** ADC Trigger 2 Source is PGxTRIGB Compare Event Enable bit
- 1 = PGxTRIGB register compare event is enabled as trigger source for ADC Trigger 2
- 0 = PGxTRIGB register compare event is disabled as trigger source for ADC Trigger 2

bit 5 **ADTR2EN1:** ADC Trigger 2 Source is PGxTRIGA Compare Event Enable bit
- 1 = PGxTRIGA register compare event is enabled as trigger source for ADC Trigger 2
- 0 = PGxTRIGA register compare event is disabled as trigger source for ADC Trigger 2

Note 1: An interrupt is only generated on the rising edge of the PCI Fault active signal.
2: An interrupt is only generated on the rising edge of the PCI current-limit active signal.
3: An interrupt is only generated on the rising edge of the PCI feed-forward active signal.
4: An interrupt is only generated on the rising edge of the PCI Sync active signal.

REGISTER 9-20: PGxEVTH: PWM GENERATOR x EVENT REGISTER HIGH (CONTINUED)

bit 4-0 **ADTR1OFS<4:0>:** ADC Trigger 1 Offset Selection bits
`11111` = Offset by 31 trigger events
`...`
`00010` = Offset by 2 trigger events
`00001` = Offset by 1 trigger event
`00000` = No offset

Note 1: An interrupt is only generated on the rising edge of the PCI Fault active signal.
2: An interrupt is only generated on the rising edge of the PCI current-limit active signal.
3: An interrupt is only generated on the rising edge of the PCI feed-forward active signal.
4: An interrupt is only generated on the rising edge of the PCI Sync active signal.

REGISTER 9-21: PGxLEBL: PWM GENERATOR x LEADING-EDGE BLANKING REGISTER LOW

R/W-0	R/W-0	R/W-0	R/W-0	R/W-0	R/W-0	R/W-0	R/W-0
LEB<15:8>							
bit 15							bit 8

R/W-0	R/W-0	R/W-0	R/W-0	R/W-0	R-0	R-0	R-0
LEB<7:0>(1)							
bit 7							bit 0

Legend:			
R = Readable bit	W = Writable bit	U = Unimplemented bit, read as ‘0’	
-n = Value at POR	‘1’ = Bit is set	‘0’ = Bit is cleared	x = Bit is unknown

bit 15-0 **LEB<15:0>:** Leading-Edge Blanking Period bits(1)

Note 1: Bits<2:0> are read-only and always remain as ‘`0`’.

© 2017-2018 Microchip Technology Inc.

REGISTER 9-22: PGxLEBH: PWM GENERATOR x LEADING-EDGE BLANKING REGISTER HIGH

U-0	U-0	U-0	U-0	U-0	R/W-0	R/W-0	R/W-0
—	—	—	—	—	PWMPCI2(1)	PWMPCI1(1)	PWMPCI0(1)
bit 15							bit 8

U-0	U-0	U-0	U-0	R/W-0	R/W-0	R/W-0	R/W-0
—	—	—	—	PHR	PHF	PLR	PLF
bit 7							bit 0

Legend:			
R = Readable bit	W = Writable bit	U = Unimplemented bit, read as ‘0’	
-n = Value at POR	‘1’ = Bit is set	‘0’ = Bit is cleared	x = Bit is unknown

bit 15-11 **Unimplemented:** Read as ‘0’

bit 10-8 **PWMPCI<2:0>:** PWM Source for PCI Selection bits(1)

111 = PWM Generator #8 output is made available to PCI logic
110 = PWM Generator #7 output is made available to PCI logic
101 = PWM Generator #6 output is made available to PCI logic
100 = PWM Generator #5 output is made available to PCI logic
011 = PWM Generator #4 output is made available to PCI logic
010 = PWM Generator #3 output is made available to PCI logic
001 = PWM Generator #2 output is made available to PCI logic
000 = PWM Generator #1 output is made available to PCI logic

bit 7-4 **Unimplemented:** Read as ‘0’

bit 3 **PHR:** PWMxH Rising bit

1 = Rising edge of PWMxH will trigger the LEB duration counter
0 = LEB ignores the rising edge of PWMxH

bit 2 **PHF:** PWMxH Falling bit

1 = Falling edge of PWMxH will trigger the LEB duration counter
0 = LEB ignores the falling edge of PWMxH

bit 1 **PLR:** PWMxL Rising bit

1 = Rising edge of PWMxL will trigger the LEB duration counter
0 = LEB ignores the rising edge of PWMxL

bit 0 **PLF:** PWMxL Falling bit

1 = Falling edge of PWMxL will trigger the LEB duration counter
0 = LEB ignores the falling edge of PWMxL

Note 1: The selected PWM Generator source does not affect the LEB counter. This source can be optionally used as a PCI input, PCI qualifier, PCI terminator or PCI terminator qualifier (see the description in Register 9-17 and Register 9-18 for more information).

REGISTER 9-23: PGxPHASE: PWM GENERATOR x PHASE REGISTER

R/W-0	R/W-0	R/W-0	R/W-0	R/W-0	R/W-0	R/W-0	R/W-0
PGxPHASE<15:8>							
bit 15							bit 8

R/W-0	R/W-0	R/W-0	R/W-0	R/W-0	R/W-0	R/W-0	R/W-0
PGxPHASE<7:0>							
bit 7							bit 0

Legend:			
R = Readable bit	W = Writable bit	U = Unimplemented bit, read as ‘0’	
-n = Value at POR	‘1’ = Bit is set	‘0’ = Bit is cleared	x = Bit is unknown

bit 15-0 **PGxPHASE<15:0>:** PWM Generator x Phase Register bits

REGISTER 9-24: PGxDC: PWM GENERATOR x DUTY CYCLE REGISTER

R/W-0	R/W-0	R/W-0	R/W-0	R/W-0	R/W-0	R/W-0	R/W-0
PGxDC<15:8>							
bit 15							bit 8

R/W-0	R/W-0	R/W-0	R/W-0	R/W-0	R/W-0	R/W-0	R/W-0
PGxDC<7:0>							
bit 7							bit 0

Legend:			
R = Readable bit	W = Writable bit	U = Unimplemented bit, read as ‘0’	
-n = Value at POR	‘1’ = Bit is set	‘0’ = Bit is cleared	x = Bit is unknown

bit 15-0 **PGxDC<15:0>:** PWM Generator x Duty Cycle Register bits

© 2017-2018 Microchip Technology Inc.

REGISTER 9-25: PGxDCA: PWM GENERATOR x DUTY CYCLE ADJUSTMENT REGISTER

U-0	U-0	U-0	U-0	U-0	U-0	U-0	U-0
—	—	—	—	—	—	—	—
bit 15							bit 8

R/W-0	R/W-0	R/W-0	R/W-0	R/W-0	R/W-0	R/W-0	R/W-0
PGxDCA<7:0>							
bit 7							bit 0

Legend:			
R = Readable bit	W = Writable bit	U = Unimplemented bit, read as ‘0’	
-n = Value at POR	‘1’ = Bit is set	‘0’ = Bit is cleared	x = Bit is unknown

bit 15-8 **Unimplemented:** Read as ‘0’

bit 7-0 **PGxDCA<7:0>:** PWM Generator x Duty Cycle Adjustment Value bits

Depending on the state of the selected PCI source, the PGxDCA value will be added to the value in the PGxDC register to create the effective duty cycle. When the PCI source is active, PGxDCA is added. When the PCI source is inactive, no adjustment is made. Duty cycle adjustment is disabled when PGxDCA<7:0> = 0. The PCI source is selected using the DTCMPSEL bit.

REGISTER 9-26: PGxPER: PWM GENERATOR x PERIOD REGISTER

R/W-0	R/W-0	R/W-0	R/W-0	R/W-0	R/W-0	R/W-0	R/W-0
PGxPER<15:8>(1)							
bit 15							bit 8

R/W-0	R/W-0	R/W-0	R/W-0	R/W-0	R/W-0	R/W-0	R/W-0
PGxPER<7:0>(1)							
bit 7							bit 0

Legend:			
R = Readable bit	W = Writable bit	U = Unimplemented bit, read as ‘0’	
-n = Value at POR	‘1’ = Bit is set	‘0’ = Bit is cleared	x = Bit is unknown

bit 15-0 **PGxPER<15:0>:** PWM Generator x Period Register bits(1)

Note 1: Period values less than ‘0x0010’ should not be selected.

REGISTER 9-27: PGxTRIGA: PWM GENERATOR x TRIGGER A REGISTER

R/W-0	R/W-0	R/W-0	R/W-0	R/W-0	R/W-0	R/W-0	R/W-0
PGxTRIGA<15:8>							
bit 15							bit 8

R/W-0	R/W-0	R/W-0	R/W-0	R/W-0	R/W-0	R/W-0	R/W-0
PGxTRIGA<7:0>							
bit 7							bit 0

Legend:			
R = Readable bit	W = Writable bit	U = Unimplemented bit, read as ‘0’	
-n = Value at POR	‘1’ = Bit is set	‘0’ = Bit is cleared	x = Bit is unknown

bit 15-0 **PGxTRIGA<15:0>:** PWM Generator x Trigger A Register bits

REGISTER 9-28: PGxTRIGB: PWM GENERATOR x TRIGGER B REGISTER

R/W-0	R/W-0	R/W-0	R/W-0	R/W-0	R/W-0	R/W-0	R/W-0
PGxTRIGB<15:8>							
bit 15							bit 8

R/W-0	R/W-0	R/W-0	R/W-0	R/W-0	R/W-0	R/W-0	R/W-0
PGxTRIGB<7:0>							
bit 7							bit 0

Legend:			
R = Readable bit	W = Writable bit	U = Unimplemented bit, read as ‘0’	
-n = Value at POR	‘1’ = Bit is set	‘0’ = Bit is cleared	x = Bit is unknown

bit 15-0 **PGxTRIGB<15:0>:** PWM Generator x Trigger B Register bits

REGISTER 9-29: PGxTRIGC: PWM GENERATOR x TRIGGER C REGISTER

R/W-0	R/W-0	R/W-0	R/W-0	R/W-0	R/W-0	R/W-0	R/W-0
PGxTRIGC<15:8>							
bit 15							bit 8

R/W-0	R/W-0	R/W-0	R/W-0	R/W-0	R/W-0	R/W-0	R/W-0
PGxTRIGC<7:0>							
bit 7							bit 0

Legend:			
R = Readable bit	W = Writable bit	U = Unimplemented bit, read as ‘0’	
-n = Value at POR	‘1’ = Bit is set	‘0’ = Bit is cleared	x = Bit is unknown

bit 15-0 **PGxTRIGC<15:0>:** PWM Generator x Trigger C Register bits

© 2017-2018 Microchip Technology Inc.

REGISTER 9-30: PGxDTL: PWM GENERATOR x DEAD-TIME REGISTER LOW

U-0	U-0	R/W-0	R/W-0	R/W-0	R/W-0	R/W-0	R/W-0
—	—	DTL<13:8>(1)					
bit 15							bit 8

R/W-0	R/W-0	R/W-0	R/W-0	R/W-0	R/W-0	R/W-0	R/W-0
DTL<7:0>							
bit 7							bit 0

Legend:			
R = Readable bit	W = Writable bit	U = Unimplemented bit, read as ‘0’	
-n = Value at POR	‘1’ = Bit is set	‘0’ = Bit is cleared	x = Bit is unknown

bit 15-14 **Unimplemented:** Read as ‘0’

bit 13-0 **DTL<13:0>:** PWMxL Dead-Time Delay bits(1)

Note 1: DTL<13:11> bits are not available when HREN (PGxCONL<7>) = 0.

REGISTER 9-31: PGxDTH: PWM GENERATOR x DEAD-TIME REGISTER HIGH

U-0	U-0	R/W-0	R/W-0	R/W-0	R/W-0	R/W-0	R/W-0
—	—	DTH<13:8>(1)					
bit 15							bit 8

R/W-0	R/W-0	R/W-0	R/W-0	R/W-0	R/W-0	R/W-0	R/W-0
DTH<7:0>							
bit 7							bit 0

Legend:			
R = Readable bit	W = Writable bit	U = Unimplemented bit, read as ‘0’	
-n = Value at POR	‘1’ = Bit is set	‘0’ = Bit is cleared	x = Bit is unknown

bit 15-14 **Unimplemented:** Read as ‘0’

bit 13-0 **DTH<13:0>:** PWMxH Dead-Time Delay bits(1)

Note 1: DTH<13:11> bits are not available when HREN (PGxCONL<7>) = 0.

REGISTER 9-32: PGxCAP: PWM GENERATOR x CAPTURE REGISTER

R-0	R-0	R-0	R-0	R-0	R-0	R-0	R-0
PGxCAP<15:8>							
bit 15							bit 8

R-0	R-0	R-0	R-0	R-0	R-0	R-0	R-0
PGxCAP<7:0>(1)							
bit 7							bit 0

Legend:			
R = Readable bit	W = Writable bit	U = Unimplemented bit, read as ‘0’	
-n = Value at POR	‘1’ = Bit is set	‘0’ = Bit is cleared	x = Bit is unknown

bit 15-0 **PGxCAP<15:0>:** PGx Time Base Capture bits(1)

Note 1: PGxCAP<1:0> will read as ‘0’ in Standard Resolution mode. PGxCAP<4:0> will read as ‘0’ in High-Resolution mode.

© 2017-2018 Microchip Technology Inc.

10.0 CAPTURE/COMPARE/PWM/ TIMER MODULES (SCCP)

Note 1: This data sheet summarizes the features of the dsPIC33CH128MP508 family of devices. It is not intended to be a comprehensive reference source. For more information on the MCCP/SCCP modules, refer to **"Capture/Compare/ PWM/Timer (MCCP and SCCP)"** (DS33035) in the *"dsPIC33/PIC24 Family Reference Manual"*.

2: The SCCP is identical for both Master core and Slave core. The x is common for both Master and Slave (where the x represents the number of the specific module being addressed).

3: All associated register names are the same on the Master core and the Slave core. The Slave code will be developed in a separate project in MPLAB® X IDE with the device selection, dsPIC33CH128MP508**S1**, where **S1** indicates the Slave device. The Master SCCP modules are SCCP1, SCCP2, SCCP3, SCCP4, SSCCP5, SCCP6, SCCP7 and SCCP8. The Slave SCCP modules are SCCP1, SCCP2, SCCP3 and SCCP4.

Table 10-1 shows an overview of the SCCP module.

TABLE 10-1: SCCP MODULE OVERVIEW

	Number of SCCP Modules	Identical (Modules)
Master Core	8	Yes
Slave Core	4	Yes

dsPIC33CH128MP508 family devices include several Capture/Compare/PWM/Timer base modules, which provide the functionality of three different peripherals from earlier PIC24F devices. The module can operate in one of three major modes:

- General Purpose Timer
- Input Capture
- Output Compare/PWM

Single CCP (SCCP) output modules provide only one PWM output.

The SCCP module can be operated only in one of the three major modes at any time. The other modes are not available unless the module is reconfigured for the new mode.

A conceptual block diagram for the module is shown in Figure 10-1. All three modes share a time base generator and a common Timer register pair (CCPxTMRH/L); other shared hardware components are added as a particular mode requires.

Each module has a total of six control and status registers:

- CCPxCON1L (Register 10-1)
- CCPxCON1H (Register 10-2)
- CCPxCON2L (Register 10-3)
- CCPxCON2H (Register 10-4)
- CCPxCON3H (Register 10-5)
- CCPxSTATL (Register 10-6)

Each module also includes eight buffer/counter registers that serve as Timer Value registers or data holding buffers:

- CCPxTMRH/CCPxTMRL (CCPx Timer High/Low Counters)
- CCPxPRH/CCPxPRL (CCPx Timer Period High/Low)
- CCPxRA (CCPx Primary Output Compare Data Buffer)
- CCPxRB (CCPx Secondary Output Compare Data Buffer)
- CCPxBUFH/CCPxBUFL (CCPx Input Capture High/Low Buffers)

FIGURE 10-1: SCCPx CONCEPTUAL BLOCK DIAGRAM

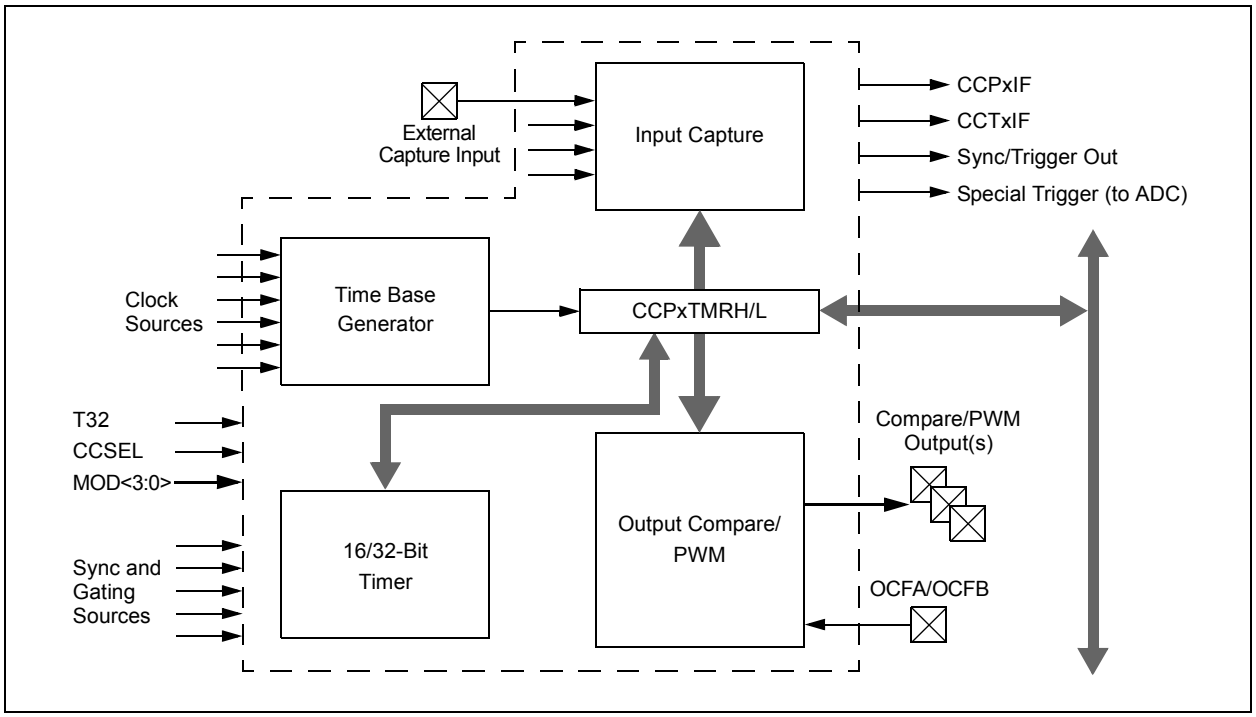

10.1 Time Base Generator

The Timer Clock Generator (TCG) generates a clock for the module's internal time base, using one of the clock signals already available on the microcontroller. This is used as the time reference for the module in its three major modes. The internal time base is shown in Figure 10-2.

There are eight inputs available to the clock generator, which are selected using the CLKSEL<2:0> bits (CCPxCON1L<10:8>). Available sources include the FRC and LPRC, the Secondary Oscillator and the TCLKI External Clock inputs. The system clock is the default source (CLKSEL<2:0> = `000`).

FIGURE 10-2: TIMER CLOCK GENERATOR

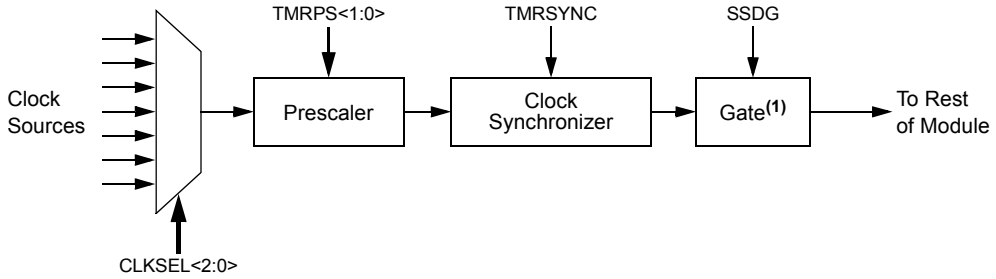

Note 1: Gating is available in Timer modes only.

© 2017-2018 Microchip Technology Inc.

10.2 General Purpose Timer

Timer mode is selected when CCSEL = 0 and MOD<3:0> = 0000. The timer can function as a 32-bit timer or a dual 16-bit timer, depending on the setting of the T32 bit (Table 10-2).

TABLE 10-2: TIMER OPERATION MODE

T32 (CCPxCON1L<5>)	Operating Mode
0	Dual Timer Mode (16-bit)
1	Timer Mode (32-bit)

Dual 16-Bit Timer mode provides a simple timer function with two independent 16-bit timer/counters. The primary timer uses CCPxTMRL and CCPxPRL. Only the primary timer can interact with other modules on the device. It generates the SCCPx sync out signals for use by other SCCP modules. It can also use the SYNC<4:0> bits signal generated by other modules.

The secondary timer uses CCPxTMRH and CCPxPRH. It is intended to be used only as a periodic interrupt source for scheduling CPU events. It does not generate an output sync/trigger signal like the primary time base. In Dual Timer mode, the CCPx Secondary Timer Period register, CCPxPRH, generates the SCCP compare event (CCPxIF) used by many other modules on the device.

The 32-Bit Timer mode uses the CCPxTMRL and CCPxTMRH registers, together, as a single 32-bit timer. When CCPxTMRL overflows, CCPxTMRH increments by one. This mode provides a simple timer function when it is important to track long time periods. Note that the T32 bit (CCPxCON1L<5>) should be set before the CCPxTMRL or CCPxPRH registers are written to initialize the 32-bit timer.

10.2.1 SYNC AND TRIGGER OPERATION

In both 16-bit and 32-bit modes, the timer can also function in either synchronization (“sync”) or trigger operation. Both use the SYNC<4:0> bits (CCPxCON1H<4:0>) to determine the input signal source. The difference is how that signal affects the timer.

In sync operation, the timer Reset or clear occurs when the input selected by SYNC<4:0> is asserted. The timer immediately begins to count again from zero unless it is held for some other reason. Sync operation is used whenever the TRIGEN bit (CCPxCON1H<7>) is cleared. SYNC<4:0> can have any value, except ‘11111’.

In trigger operation, the timer is held in Reset until the input selected by SYNC<4:0> is asserted; when it occurs, the timer starts counting. Trigger operation is used whenever the TRIGEN bit is set. In Trigger mode, the timer will continue running after a trigger event as long as the CCPTRIG bit (CCPxSTATL<7>) is set. To clear CCPTRIG, the TRCLR bit (CCPxSTATL<5>) must be set to clear the trigger event, reset the timer and hold it at zero until another trigger event occurs. On dsPIC33CH128MP508 family devices, trigger operation can only be used when the system clock is the time base source (CLKSEL<2:0> = 000).

FIGURE 10-3: DUAL 16-BIT TIMER MODE

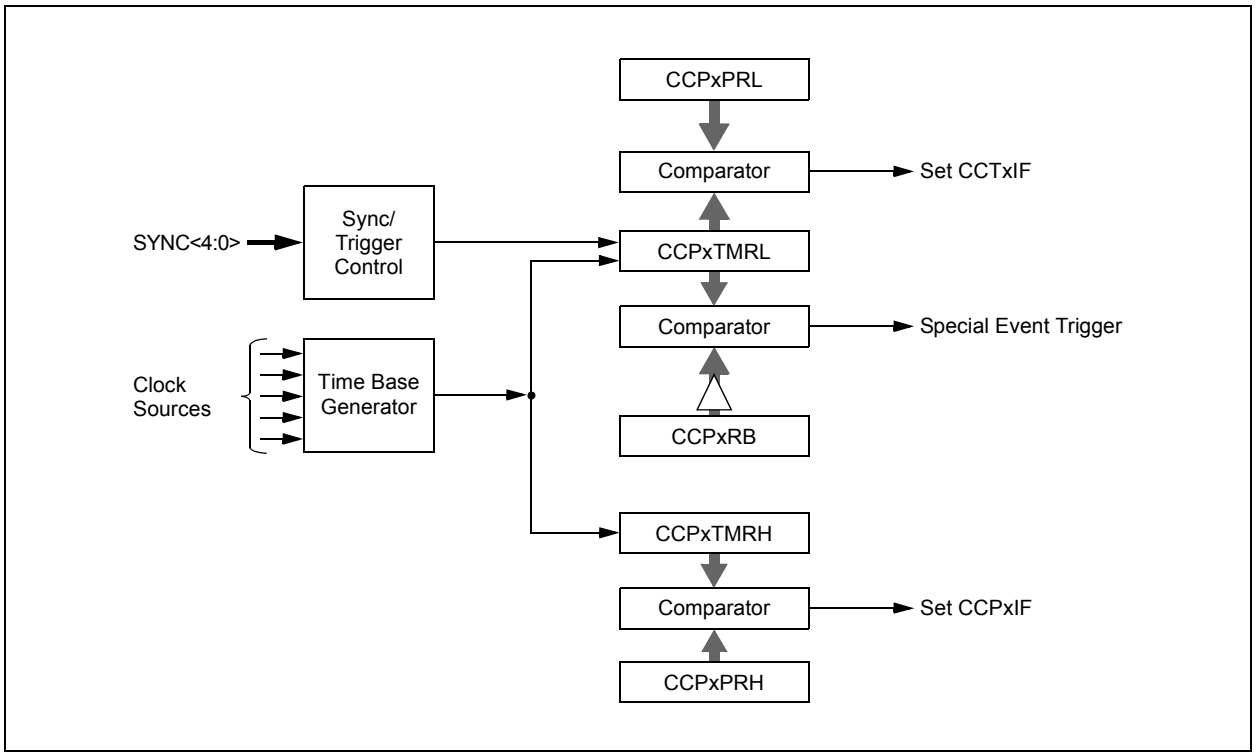

FIGURE 10-4: 32-BIT TIMER MODE

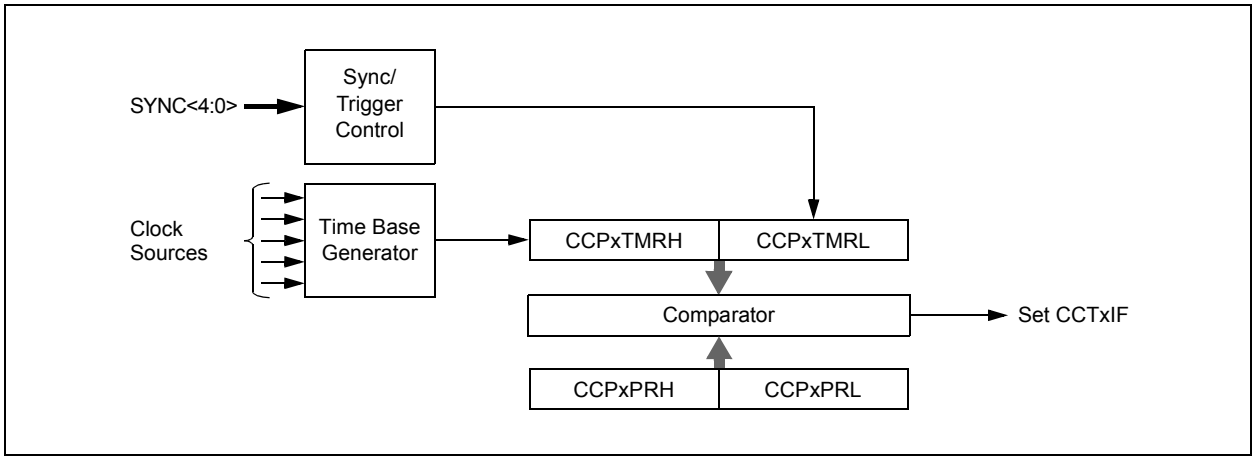

© 2017-2018 Microchip Technology Inc.

10.3 Output Compare Mode

Output Compare mode compares the Timer register value with the value of one or two Compare registers, depending on its mode of operation. The Output Compare x module, on compare match events, has the ability to generate a single output transition or a train of output pulses. Like most PIC® MCU peripherals, the Output Compare x module can also generate interrupts on a compare match event.

Table 10-3 shows the various modes available in Output Compare modes.

TABLE 10-3: OUTPUT COMPARE x/PWMx MODES

MOD<3:0> (CCPxCON1L<3:0>)	T32 (CCPxCON1L<5>)	Operating Mode	
0001	0	Output High on Compare (16-bit)	Single Edge Mode
0001	1	Output High on Compare (32-bit)	
0010	0	Output Low on Compare (16-bit)	
0010	1	Output Low on Compare (32-bit)	
0011	0	Output Toggle on Compare (16-bit)	
0011	1	Output Toggle on Compare (32-bit)	
0100	0	Dual Edge Compare (16-bit)	Dual Edge Mode
0101	0	Dual Edge Compare (16-bit buffered)	PWM Mode

FIGURE 10-5: OUTPUT COMPARE x BLOCK DIAGRAM

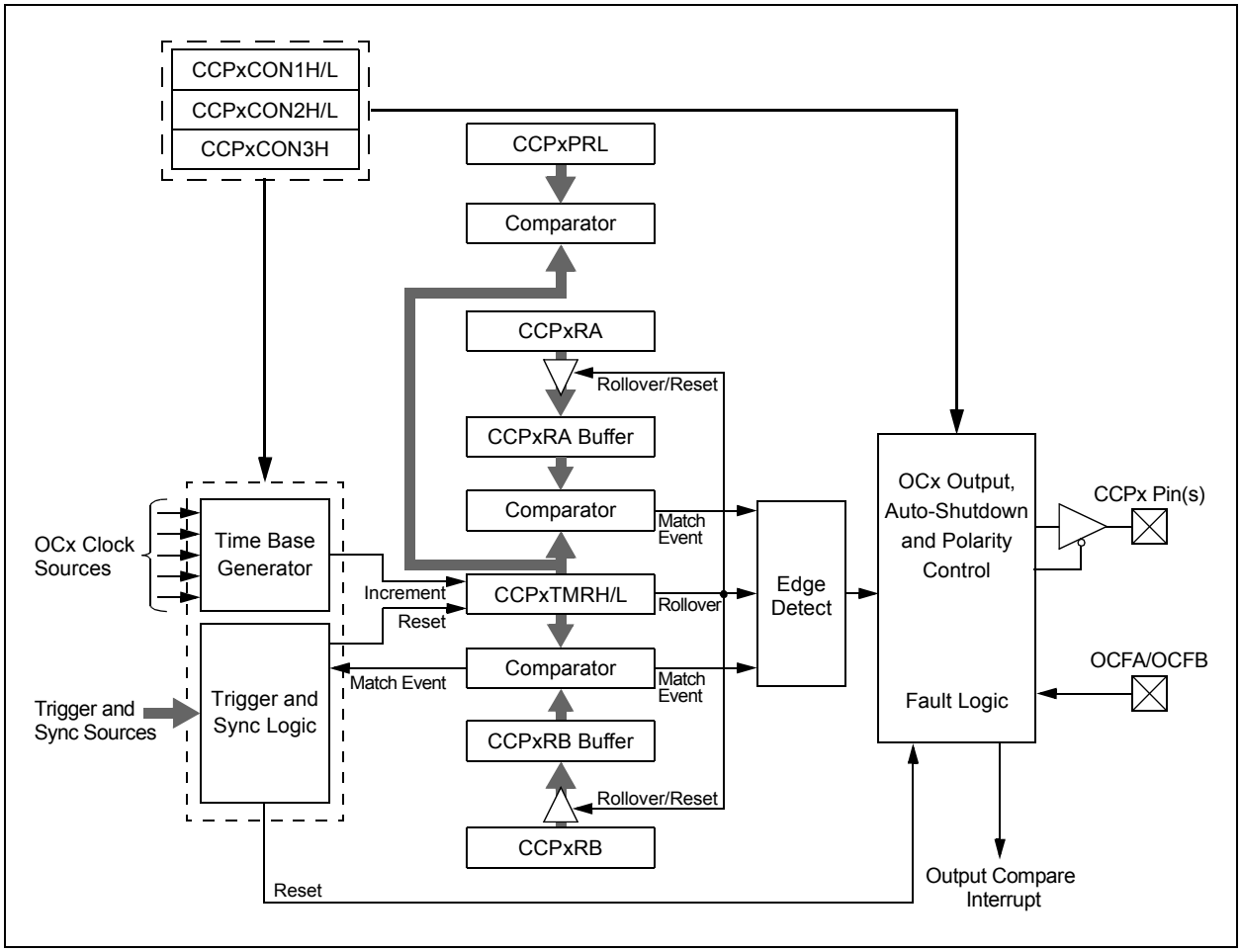

10.4 Input Capture Mode

Input Capture mode is used to capture a timer value from an independent timer base, upon an event, on an input pin or other internal trigger source. The input capture features are useful in applications requiring frequency (time period) and pulse measurement. Figure 10-6 depicts a simplified block diagram of Input Capture mode.

Input Capture mode uses a dedicated 16/32-bit, synchronous, up counting timer for the capture function. The timer value is written to the FIFO when a capture event occurs. The internal value may be read (with a synchronization delay) using the CCPxTMRH/L register.

To use Input Capture mode, the CCSEL bit (CCPxCON1L<4>) must be set. The T32 and the MOD<3:0> bits are used to select the proper Capture mode, as shown in Table 10-4.

TABLE 10-4: INPUT CAPTURE x MODES

MOD<3:0> (CCPxCON1L<3:0>)	T32 (CCPxCON1L<5>)	Operating Mode
0000	0	Edge Detect (16-bit capture)
0000	1	Edge Detect (32-bit capture)
0001	0	Every Rising (16-bit capture)
0001	1	Every Rising (32-bit capture)
0010	0	Every Falling (16-bit capture)
0010	1	Every Falling (32-bit capture)
0011	0	Every Rising/Falling (16-bit capture)
0011	1	Every Rising/Falling (32-bit capture)
0100	0	Every 4th Rising (16-bit capture)
0100	1	Every 4th Rising (32-bit capture)
0101	0	Every 16th Rising (16-bit capture)
0101	1	Every 16th Rising (32-bit capture)

FIGURE 10-6: INPUT CAPTURE x BLOCK DIAGRAM

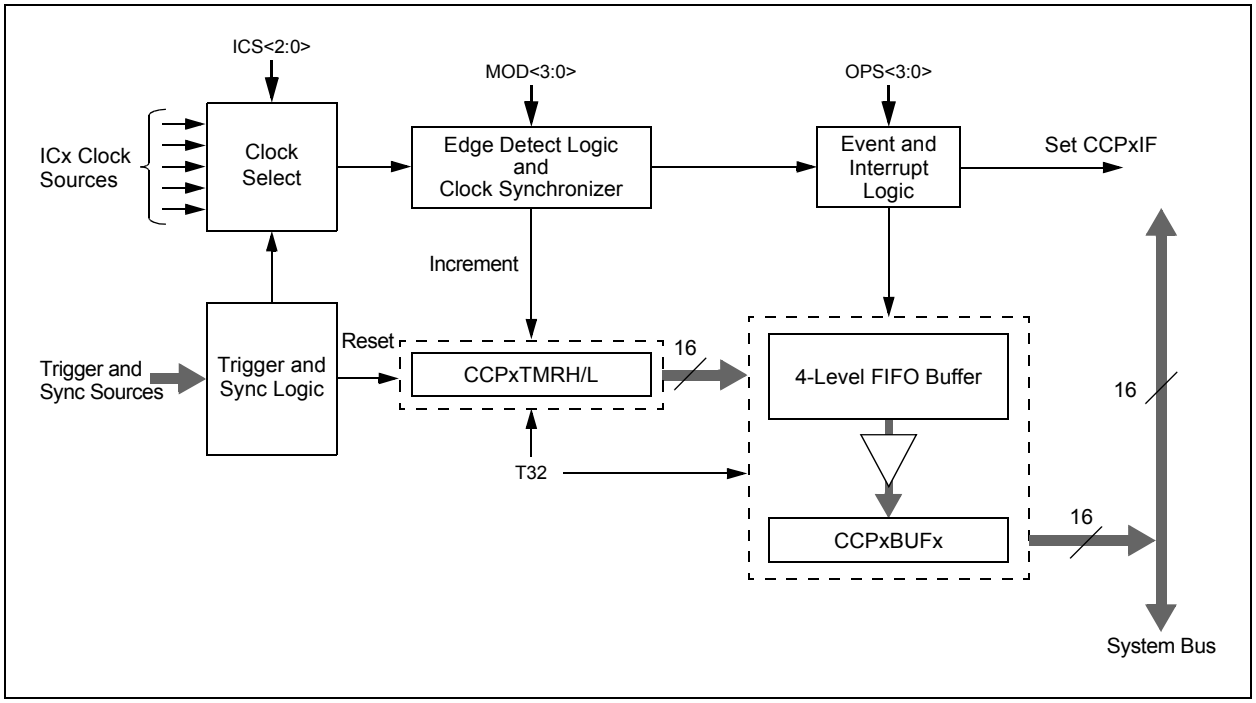

© 2017-2018 Microchip Technology Inc.

10.5 Auxiliary Output

The SCCPx modules have an auxiliary (secondary) output that provides other peripherals access to internal module signals. The auxiliary output is intended to connect to other SCCP modules, or other digital peripherals, to provide these types of functions:

- Time Base Synchronization
- Peripheral Trigger and Clock Inputs
- Signal Gating

The type of output signal is selected using the AUXOUT<1:0> control bits (CCPxCON2H<4:3>). The type of output signal is also dependent on the module operating mode.

TABLE 10-5: AUXILIARY OUTPUT

AUXOUT<1:0>	CCSEL	MOD<3:0>	Comments	Signal Description
00	x	xxxx	Auxiliary output disabled	No Output
01	0	0000	Time Base modes	Time Base Period Reset or Rollover
10				Special Event Trigger Output
11				No Output
01	0	0001 through 1111	Output Compare modes	Time Base Period Reset or Rollover
10				Output Compare Event Signal
11				Output Compare Signal
01	1	xxxx	Input Capture modes	Time Base Period Reset or Rollover
10				Reflects the Value of the ICDIS bit
11				Input Capture Event Signal

10.6 SCCP Control/Status Registers

REGISTER 10-1: CCPxCON1L: CCPx CONTROL 1 LOW REGISTERS

R/W-0	U-0	R/W-0	R/W-0	R/W-0	R/W-0	R/W-0	R/W-0
CCPON	—	CCPSIDL	CCPSLP	TMRSYNC	CLKSEL2(1)	CLKSEL1(1)	CLKSEL0(1)
bit 15							bit 8

R/W-0	R/W-0	R/W-0	R/W-0	R/W-0	R/W-0	R/W-0	R/W-0
TMRPS1	TMRPS0	T32	CCSEL	MOD3	MOD2	MOD1	MOD0
bit 7							bit 0

Legend:			
R = Readable bit	W = Writable bit	U = Unimplemented bit, read as ‘0’	
-n = Value at POR	‘1’ = Bit is set	‘0’ = Bit is cleared	x = Bit is unknown

bit 15 **CCPON:** CCPx Module Enable bit
1 = Module is enabled with an operating mode specified by the MOD<3:0> control bits
0 = Module is disabled

bit 14 **Unimplemented:** Read as ‘0’

bit 13 **CCPSIDL:** CCPx Stop in Idle Mode bit
1 = Discontinues module operation when device enters Idle mode
0 = Continues module operation in Idle mode

bit 12 **CCPSLP:** CCPx Sleep Mode Enable bit
1 = Module continues to operate in Sleep modes
0 = Module does not operate in Sleep modes

bit 11 **TMRSYNC:** Time Base Clock Synchronization bit
1 = Asynchronous module time base clock is selected and synchronized to the internal system clocks (CLKSEL<2:0> ≠ 000)
0 = Synchronous module time base clock is selected and does not require synchronization (CLKSEL<2:0> = 000)

bit 10-8 **CLKSEL<2:0>:** CCPx Time Base Clock Select bits(1)
111 = External T1CK input
110 = Slave CLC2
101 = Slave CLC1
100 = Master CLC2
011 = Master CLC1
010 = FOSC
001 = Reference Clock (REFCLKO)
000 = FOSC/2 (FP)

bit 7-6 **TMRPS<1:0>:** Time Base Prescale Select bits
11 = 1:64 Prescaler
10 = 1:16 Prescaler
01 = 1:4 Prescaler
00 = 1:1 Prescaler

bit 5 **T32:** 32-Bit Time Base Select bit
1 = Uses 32-bit time base for timer, single edge output compare or input capture function
0 = Uses 16-bit time base for timer, single edge output compare or input capture function

bit 4 **CCSEL:** Capture/Compare Mode Select bit
1 = Input Capture peripheral
0 = Output Compare/PWM/Timer peripheral (exact function is selected by the MOD<3:0> bits)

Note 1: Clock selection is the same for the Master and the Slave.

© 2017-2018 Microchip Technology Inc.

REGISTER 10-1: CCPxCON1L: CCPx CONTROL 1 LOW REGISTERS (CONTINUED)

bit 3-0 **MOD<3:0>:** CCPx Mode Select bits

For CCSEL = 1 (Input Capture modes):

1xxx = Reserved
011x = Reserved
0101 = Capture every 16th rising edge
0100 = Capture every 4th rising edge
0011 = Capture every rising and falling edge
0010 = Capture every falling edge
0001 = Capture every rising edge
0000 = Capture every rising and falling edge (Edge Detect mode)

For CCSEL = 0 (Output Compare/Timer modes):

1111 = External Input mode: Pulse generator is disabled, source is selected by ICS<2:0>
1110 = Reserved
110x = Reserved
10xx = Reserved
0111 = Reserved
0110 = Reserved
0101 = Dual Edge Compare mode, buffered
0100 = Dual Edge Compare mode
0011 = 16-Bit/32-Bit Single Edge mode, toggles output on compare match
0010 = 16-Bit/32-Bit Single Edge mode, drives output low on compare match
0001 = 16-Bit/32-Bit Single Edge mode, drives output high on compare match
0000 = 16-Bit/32-Bit Timer mode, output functions are disabled

Note 1: Clock selection is the same for the Master and the Slave.

REGISTER 10-2: CCPxCON1H: CCPx CONTROL 1 HIGH REGISTERS

R/W-0	R/W-0	U-0	U-0	R/W-0	R/W-0	R/W-0	R/W-0
OPSSRC(1)	RTRGEN(2)	—	—	OPS3(3)	OPS2(3)	OPS1(3)	OPS0(3)
bit 15							bit 8

R/W-0	R/W-0	R/W-0	R/W-0	R/W-0	R/W-0	R/W-0	R/W-0
TRIGEN	ONESHOT	ALTSYNC	SYNC4	SYNC3	SYNC2	SYNC1	SYNC0
bit 7							bit 0

Legend:			
R = Readable bit	W = Writable bit	U = Unimplemented bit, read as ‘0’	
-n = Value at POR	‘1’ = Bit is set	‘0’ = Bit is cleared	x = Bit is unknown

bit 15 **OPSSRC:** Output Postscaler Source Select bit(1)
`1` = Output postscaler scales module trigger output events
`0` = Output postscaler scales time base interrupt events

bit 14 **RTRGEN:** Retrigger Enable bit(2)
`1` = Time base can be retriggered when TRIGEN bit = `1`
`0` = Time base may not be retriggered when TRIGEN bit = `1`

bit 13-12 **Unimplemented:** Read as ‘`0`’

bit 11-8 **OPS3<3:0>:** CCPx Interrupt Output Postscale Select bits(3)
`1111` = Interrupt every 16th time base period match
`1110` = Interrupt every 15th time base period match
`...`
`0100` = Interrupt every 5th time base period match
`0011` = Interrupt every 4th time base period match or 4th input capture event
`0010` = Interrupt every 3rd time base period match or 3rd input capture event
`0001` = Interrupt every 2nd time base period match or 2nd input capture event
`0000` = Interrupt after each time base period match or input capture event

bit 7 **TRIGEN:** CCPx Trigger Enable bit
`1` = Trigger operation of time base is enabled
`0` = Trigger operation of time base is disabled

bit 6 **ONESHOT:** One-Shot Trigger Mode Enable bit
`1` = One-Shot Trigger mode is enabled; trigger duration is set by OSCNT<2:0>
`0` = One-Shot Trigger mode is disabled

bit 5 **ALTSYNC:** CCPx Clock Select bits
`1` = An alternate signal is used as the module synchronization output signal
`0` = The module synchronization output signal is the Time Base Reset/rollover event

bit 4-0 **SYNC<4:0>:** CCPx Synchronization Source Select bits
See Table 10-6 and Table 10-7 for the definition of inputs.

Note 1: This control bit has no function in Input Capture modes.
2: This control bit has no function when TRIGEN = `0`.
3: Output postscale settings, from 1:5 to 1:16 (`0100-1111`), will result in a FIFO buffer overflow for Input Capture modes.

© 2017-2018 Microchip Technology Inc.

TABLE 10-6: SYNCHRONIZATION SOURCES (MASTER)

SYNC<4:0>	Synchronization Source
00000	None; Timer with Rollover on CCPxPR Match or FFFFh
00001	Module's Own Timer Sync Out
00010	Sync Output SCCP1
00011	Sync Output SCCP2
00100	Sync Output SCCP3
00101	Sync Output SCCP4
00110	Sync Output SCCP5
00111	Sync Output SCCP6
01000	Sync Output SCCP7
01001	INT0
01010	INT1
01011	INT2
01100-01111	Reserved
10000	Master CLC1 Output
10001	Master CLC2 Output
10010	Slave CLC1 Output
10011	Slave CLC2 Output
10100-10110	Reserved
10111	Comparator 1 Output
11000	Slave Comparator 1 Output
11001	Slave Comparator 2 Output
11010	Slave Comparator 3 Output
11011-11110	Reserved
11111	None; Timer with Auto-Rollover (FFFFh → 0000h)

TABLE 10-7: SYNCHRONIZATION SOURCES (SLAVE)

SYNC<4:0>	Synchronization Source
00000	None; Timer with Rollover on CCPxPR Match or FFFFh
00001	Module's Own Timer Sync Out
00010	Sync Output SCCP1
00011	Sync Output SCCP2
00100	Sync Output SCCP3
00101	Sync Output SCCP4
00110-01000	Reserved
01001	INT0
01010	INT1
01011	INT2
01100-01111	Reserved
10000	Master CLC1 Output
10001	Master CLC2 Output
10010	Slave CLC1 Output
10011	Slave CLC2 Output
10100-10110	Reserved
10111	Master Comparator 1 Output
11000	Slave Comparator 1 Output
11001	Slave Comparator 2 Output
11010	Slave Comparator 3 Output
11011-11110	Reserved
11111	None; Timer with Auto-Rollover (FFFFh → 0000h)

© 2017-2018 Microchip Technology Inc.

REGISTER 10-3: CCPxCON2L: CCPx CONTROL 2 LOW REGISTERS

R/W-0	R/W-0	U-0	R/W-0	U-0	U-0	U-0	U-0
PWMRSEN	ASDGM	—	SSDG	—	—	—	—
bit 15							bit 8

R/W-0	R/W-0	R/W-0	R/W-0	R/W-0	R/W-0	R/W-0	R/W-0
ASDG7	ASDG6	ASDG5	ASDG4	ASDG3	ASDG2	ASDG1	ASDG0
bit 7							bit 0

Legend:			
R = Readable bit	W = Writable bit	U = Unimplemented bit, read as ‘0’	
-n = Value at POR	‘1’ = Bit is set	‘0’ = Bit is cleared	x = Bit is unknown

bit 15 **PWMRSEN:** CCPx PWM Restart Enable bit
- 1 = ASEVT bit clears automatically at the beginning of the next PWM period, after the shutdown input has ended
- 0 = ASEVT bit must be cleared in software to resume PWM activity on output pins

bit 14 **ASDGM:** CCPx Auto-Shutdown Gate Mode Enable bit
- 1 = Waits until the next Time Base Reset or rollover for shutdown to occur
- 0 = Shutdown event occurs immediately

bit 13 **Unimplemented:** Read as ‘0’

bit 12 **SSDG:** CCPx Software Shutdown/Gate Control bit
- 1 = Manually forces auto-shutdown, timer clock gate or input capture signal gate event (setting of ASDGM bit still applies)
- 0 = Normal module operation

bit 11-8 **Unimplemented:** Read as ‘0’

bit 7-0 **ASDG<7:0>:** CCPx Auto-Shutdown/Gating Source Enable bits
- 1 = ASDGx Source n is enabled (see Table 10-8 and Table 10-9 for auto-shutdown/gating sources)
- 0 = ASDGx Source n is disabled

TABLE 10-8: AUTO-SHUTDOWN AND GATING SOURCES (MASTER)

ASDG<x> Bit	Auto-Shutdown/Gating Source							
	SCCP1	SCCP2	SCCP3	SCCP4	SCCP5	SCCP6	SCCP7	SCCP8
0	Master Comparator 1 Output							
1	Slave Comparator 1 Output							
2	Slave Comparator 2 Output							
3	Slave Comparator 3 Output							
4	Master ICM1(1)	Master ICM2(1)	Master ICM3(1)	Master ICM4(1)	Master ICM5(1)	Master ICM6(1)	Master ICM7(1)	Master ICM8(1)
5	Master CLC1(1)							
6	Master OCFA(1)							
7	Master OCFB(1)							

Note 1: Selected by Peripheral Pin Select (PPS).

TABLE 10-9: AUTO-SHUTDOWN AND GATING SOURCES (SLAVE)

ASDG<x> Bit	Auto-Shutdown/Gating Source			
	SCCP1	SCCP2	SCCP3	SCCP4
0	Master Comparator 1 Output			
1	Slave Comparator 1 Output			
2	Slave Comparator 2 Output			
3	Slave Comparator 3 Output			
4	Slave ICM1(1)	Slave ICM2(1)	Slave ICM3(1)	Slave ICM4(1)
5	Slave CLC1(1)			
6	Slave OCFA(1)			
7	Slave OCFB(1)			

Note 1: Selected by Peripheral Pin Select (PPS).

© 2017-2018 Microchip Technology Inc.

REGISTER 10-4: CCPxCON2H: CCPx CONTROL 2 HIGH REGISTERS

R/W-0	U-0	U-0	U-0	U-0	U-0	U-0	R/W-0
OENSYNC	—	—	—	—	—	—	OCAEN
bit 15							bit 8

R/W-0	R/W-0	U-0	R/W-0	R/W-0	R/W-0	R/W-0	R/W-0
ICGSM1	ICGSM0	—	AUXOUT1	AUXOUT0	ICS2(1)	ICS1(1)	ICS0(1)
bit 7							bit 0

Legend:			
R = Readable bit	W = Writable bit	U = Unimplemented bit, read as ‘0’	
-n = Value at POR	‘1’ = Bit is set	‘0’ = Bit is cleared	x = Bit is unknown

bit 15 **OENSYNC:** Output Enable Synchronization bit
1 = Update by output enable bits occurs on the next Time Base Reset or rollover
0 = Update by output enable bits occurs immediately

bit 14-9 **Unimplemented:** Read as ‘0’

bit 8 **OCAEN:** Output Enable/Steering Control bit
1 = OCx pin is controlled by the CCPx module and produces an output compare or PWM signal
0 = OCx pin is not controlled by the CCPx module; the pin is available to the port logic or another peripheral multiplexed on the pin

bit 7-6 **ICGSM<1:0>:** Input Capture Gating Source Mode Control bits
11 = Reserved
10 = One-Shot mode: Falling edge from gating source disables future capture events (ICDIS = 1)
01 = One-Shot mode: Rising edge from gating source enables future capture events (ICDIS = 0)
00 = Level-Sensitive mode: A high level from gating source will enable future capture events; a low level will disable future capture events

bit 5 **Unimplemented:** Read as ‘0’

bit 4-3 **AUXOUT<1:0>:** Auxiliary Output Signal on Event Selection bits
11 = Input capture or output compare event; no signal in Timer mode
10 = Signal output is defined by module operating mode (see Table 10-5)
01 = Time base rollover event (all modes)
00 = Disabled

bit 2-0 **ICS<2:0>:** Input Capture Source Select bits(1)
111 = Slave CLC2 output
110 = Slave CLC1 output
101 = Master CLC2 output
100 = Master CLC1 output
011 = Slave Comparator 2 output
010 = Slave Comparator 1 output
001 = Master Comparator 1 output
000 = SCCP Input Capture x (ICx) pin (PPS)

Note 1: Common for both the Master and the Slave.

REGISTER 10-5: CCPxCON3H: CCPx CONTROL 3 HIGH REGISTERS

R/W-0	R/W-0	R/W-0	R/W-0	U-0	U-0	U-0	U-0
OETRIG	OSCNT2	OSCNT1	OSCNT0	—	—	—	—
bit 15							bit 8

U-0	U-0	R/W-0	U-0	R/W-0	R/W-0	R/W-0	R/W-0
—	—	POLACE	—	PSSACE1	PSSACE0	PSSBDF1	PSSBDF0
bit 7							bit 0

Legend:			
R = Readable bit	W = Writable bit	U = Unimplemented bit, read as ‘0’	
-n = Value at POR	‘1’ = Bit is set	‘0’ = Bit is cleared	x = Bit is unknown

bit 15 **OETRIG:** CCPx Dead-Time Select bit
1 = For Triggered mode (TRIGEN = 1): Module does not drive enabled output pins until triggered
0 = Normal output pin operation

bit 14-12 **OSCNT<2:0>:** One-Shot Event Count bits
111 = Extends one-shot event by 7 time base periods (8 time base periods total)
110 = Extends one-shot event by 6 time base periods (7 time base periods total)
101 = Extends one-shot event by 5 time base periods (6 time base periods total)
100 = Extends one-shot event by 4 time base periods (5 time base periods total)
011 = Extends one-shot event by 3 time base periods (4 time base periods total)
010 = Extends one-shot event by 2 time base periods (3 time base periods total)
001 = Extends one-shot event by 1 time base period (2 time base periods total)
000 = Does not extend one-shot trigger event

bit 11-6 **Unimplemented:** Read as ‘0’

bit 5 **POLACE:** CCPx Output Pins, OCxA, OCxC and OCxE, Polarity Control bit
1 = Output pin polarity is active low
0 = Output pin polarity is active high

bit 4 **Unimplemented:** Read as ‘0’

bit 3-2 **PSSACE<1:0>:** PWMx Output Pins, OCxA, OCxC and OCxE, Shutdown State Control bits
11 = Pins are driven active when a shutdown event occurs
10 = Pins are driven inactive when a shutdown event occurs
0x = Pins are in high-impedance state when a shutdown event occurs

bit 1-0 **PSSBDF<1:0>:** PWMx Output Pins, OCMxB, OCMxD, and OCMxF, Shutdown State Control bits
11 = Pins are driven active when a shutdown event occurs
10 = Pins are driven inactive when a shutdown event occurs
0x = Pins are in a high-impedance state when a shutdown event occurs

© 2017-2018 Microchip Technology Inc.

REGISTER 10-6: CCPxSTATL: CCPx STATUS REGISTER

U-0	U-0	U-0	U-0	U-0	U-0	U-0	U-0
—	—	—	—	—	—	—	—
bit 15							bit 8

R-0	W1-0	W1-0	R/C-0	R/C-0	R/C-0	R/C-0	R/C-0
CCPTRIG	TRSET	TRCLR	ASEVT	SCEVT	ICDIS	ICOV	ICBNE
bit 7							bit 0

Legend:	C = Clearable bit		
R = Readable bit	W1 = Write ‘1’ Only bit	U = Unimplemented bit, read as ‘0’	
-n = Value at POR	‘1’ = Bit is set	‘0’ = Bit is cleared	x = Bit is unknown

bit 15-8 **Unimplemented:** Read as ‘0’

bit 7 **CCPTRIG:** CCPx Trigger Status bit
1 = Timer has been triggered and is running
0 = Timer has not been triggered and is held in Reset

bit 6 **TRSET:** CCPx Trigger Set Request bit
Writes ‘1’ to this location to trigger the timer when TRIGEN = 1 (location always reads as ‘0’).

bit 5 **TRCLR:** CCPx Trigger Clear Request bit
Writes ‘1’ to this location to cancel the timer trigger when TRIGEN = 1 (location always reads as ‘0’).

bit 4 **ASEVT:** CCPx Auto-Shutdown Event Status/Control bit
1 = A shutdown event is in progress; CCPx outputs are in the shutdown state
0 = CCPx outputs operate normally

bit 3 **SCEVT:** Single Edge Compare Event Status bit
1 = A single edge compare event has occurred
0 = A single edge compare event has not occurred

bit 2 **ICDIS:** Input Capture x Disable bit
1 = Event on Input Capture x pin (ICx) does not generate a capture event
0 = Event on Input Capture x pin will generate a capture event

bit 1 **ICOV:** Input Capture x Buffer Overflow Status bit
1 = The Input Capture x FIFO buffer has overflowed
0 = The Input Capture x FIFO buffer has not overflowed

bit 0 **ICBNE:** Input Capture x Buffer Status bit
1 = Input Capture x buffer has data available
0 = Input Capture x buffer is empty

NOTES:

© 2017-2018 Microchip Technology Inc.

11.0 HIGH-SPEED ANALOG COMPARATOR WITH SLOPE COMPENSATION DAC

Note 1: This data sheet summarizes the features of the dsPIC33CH128MP508 family of devices. It is not intended to be a comprehensive reference source. To complement the information in this data sheet, refer to **"High-Speed Analog Comparator Module"** (DS70005280) in the *"dsPIC33/PIC24 Family Reference Manual"*, which is available from the Microchip web site (www.microchip.com).

2: Some registers and associated bits described in this section may not be available on all devices. Refer to **Section 3.2 "Master Memory Organization"** in this data sheet for device-specific register and bit information.

3: The comparator and DAC are identical for both Master core and Slave core. The module is similar for both Master core and Slave core (where the x represents the number of the specific modules being addressed in Master or Slave).

The high-speed analog comparator module provides a method to monitor voltage, current and other critical signals in a power conversion application that may be too fast for the CPU and ADC to capture. There are a total of four comparator modules, one of which is controlled by the Master core and the remaining three by the Slave core. The analog comparator module can be used to implement Peak Current mode control, Critical Conduction mode (variable frequency) and Hysteretic Control mode. Table 11-1 shows an overview of the comparator/DAC module.

TABLE 11-1: COMPARATOR/DAC MODULE OVERVIEW

	Number of Comparator Modules	Identical (Modules)
Master Core	1	Yes
Slave Core	3	Yes

11.1 Overview

The high-speed analog comparator module is comprised of a high-speed comparator, Pulse Density Modulation (PDM) DAC and a slope compensation unit. The slope compensation unit provides a user-defined slope which can be used to alter the DAC output. This feature is useful in applications, such as Peak Current mode control, where slope compensation is required to maintain the stability of the power supply. The user simply specifies the direction and rate of change for the slope compensation and the output of the DAC is modified accordingly.

The DAC consists of a PDM unit, followed by a digitally controlled multiphase RC filter. The PDM unit uses a phase accumulator circuit to generate an output stream of pulses. The density of the pulse stream is proportional to the input data value, relative to the maximum value supported by the bit width of the accumulator. The output pulse density is representative of the desired output voltage. The pulse stream is filtered with an RC filter to yield an analog voltage. The output of the DAC is connected to the negative input of the comparator. The positive input of the comparator can be selected using a MUX from either of the input pins or the output of the PGAs. The comparator provides a high-speed operation with a typical delay of 15 ns.

The output of the comparator is processed by the pulse stretcher and the digital filter blocks, which prevent comparator response to unintended fast transients in the inputs. Figure 11-1 shows a block diagram of the high-speed analog comparator module. The DAC module can be operated in one of three modes: Slope Generation mode, Hysteretic mode and Triangle Wave mode. Each of these modes can be used in a variety of power supply applications.

Note: The DACOUT pin can only be associated with a single DAC or PGA output at any given time. If more than one DACOEN bit is set, or the PGA Output Enable bit (PGAOEN) and the DACOEN bit are set, the DACOUT pin will be a combination of the signals.

Note: DAC input frequency needs to be 500 MHz.

FIGURE 11-1: HIGH-SPEED ANALOG COMPARATOR MODULE BLOCK DIAGRAM

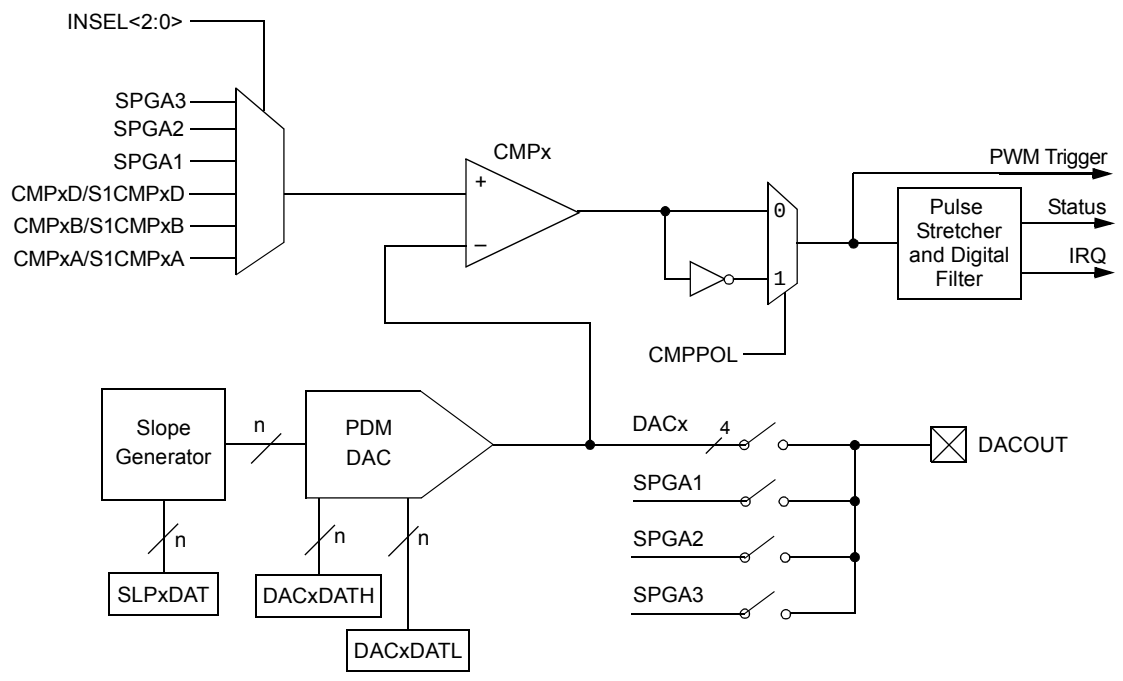

Note: n = 16

© 2017-2018 Microchip Technology Inc.

11.2 Features Overview

- Four Rail-to-Rail Analog Comparators
- Up to Five Selectable Input Sources per Comparator:
  - Three external inputs
  - Two internal inputs from PGA module
- Programmable Comparator Hysteresis
- Programmable Output Polarity
- Interrupt Generation Capability
- Dedicated Pulse Density Modulation DAC for each Analog Comparator:
  - PDM unit followed by a digitally controlled multimode multipole RC filter
- Multimode Multipole RC Output Filter:
  - Transition mode: Provides the fastest response
  - Fast mode: For tracking DAC slopes
  - Steady-State mode: Provides 12-bit resolution
- Slope Compensation along with each DAC:
  - Slope Generation mode
  - Hysteretic Control mode
  - Triangle Wave mode
- Functional Support for the High-Speed PWM module which Includes:
  - PWM duty cycle control
  - PWM period control
  - PWM Fault detect

11.3 DAC Control Registers

The DACCTRL1L and DACCTRL2H/L registers are common configuration registers for Master and Slave DAC modules. The Master and Slave DAC modules are controlled by separate sets of DACCTRL1/2 registers. The DACxCON, DACxDAT, SLPxCON and SLPxDAT registers specify the operation of individual modules. Note that x = 1 for the Master module and x = 1-3 for the Slave modules.

REGISTER 11-1: DACCTRL1L: DAC CONTROL 1 LOW REGISTER

R/W-0	U-0	R/W-0	U-0	U-0	U-0	U-0	U-0
DACON	—	DACSIDL	—	—	—	—	—
bit 15							bit 8

R/W-0	R/W-0	R/W-0	R/W-0	U-0	R/W-0	R/W-0	R/W-0
CLKSEL1(1)	CLKSEL0(1)	CLKDIV1(1)	CLKDIV0(1)	—	FCLKDIV2(2)	FCLKDIV1(2)	FCLKDIV0(2)
bit 7							bit 0

Legend:		
R = Readable bit	W = Writable bit	U = Unimplemented bit, read as ‘0’
-n = Value at POR	‘1’ = Bit is set	‘0’ = Bit is cleared

bit 15 **DACON:** Common DAC Module Enable bit
1 = Enables DAC modules
0 = Disables DAC modules and disables FSCM clocks to reduce power consumption; any pending Slope mode and/or underflow conditions are cleared

bit 14 **Unimplemented:** Read as ‘0’

bit 13 **DACSIDL:** DAC Stop in Idle Mode bit
1 = Discontinues module operation when device enters Idle mode
0 = Continues module operation in Idle mode

bit 12-8 **Unimplemented:** Read as ‘0’

bit 7-6 **CLKSEL<1:0>:** DAC Clock Source Select bits(1)
11 = F_{PLLO}
10 = AF_{PLLO}
01 = $F_{VCO}/2$
00 = $AF_{VCO}/2$

bit 5-4 **CLKDIV<1:0>:** DAC Clock Divider bits (DAC should be operated at 500 MHz)(1)
11 = Divide-by-4
10 = Divide-by-3 (non-uniform duty cycle)
01 = Divide-by-2
00 = 1x

bit 3 **Unimplemented:** Read as ‘0’

bit 2-0 **FCLKDIV<2:0>:** Comparator Filter Clock Divider bits(2)
111 = Divide-by-8
110 = Divide-by-7
101 = Divide-by-6
100 = Divide-by-5
011 = Divide-by-4
010 = Divide-by-3
001 = Divide-by-2
000 = 1x

Note 1: These bits should only be changed when DACON = 0 to avoid unpredictable behavior.
2: The input clock to this divider is the selected clock input, CLKSEL<1:0>, and then divided by two.

© 2017-2018 Microchip Technology Inc.

REGISTER 11-2: DACCTRL2H: DAC CONTROL 2 HIGH REGISTER

U-0	U-0	U-0	U-0	U-0	U-0	R/W-0	R/W-0
—	—	—	—	—	—	SSTIME<9:8>(1)	
bit 15							bit 8

R/W-1	R/W-0	R/W-0	R/W-0	R/W-1	R/W-0	R/W-1	R/W-0
SSTIME<7:0>(1)							
bit 7							bit 0

Legend:		
R = Readable bit	W = Writable bit	U = Unimplemented bit, read as ‘0’
-n = Value at POR	‘1’ = Bit is set	‘0’ = Bit is cleared

bit 15-10 **Unimplemented:** Read as ‘0’

bit 9-0 **SSTIME<9:0>:** Time from Start of Transition Mode until Steady-State Filter is Enabled bits(1)

Note 1: The value for SSTIME<9:0> should be greater than the TMODTIME<9:0> value.

REGISTER 11-3: DACCTRL2L: DAC CONTROL 2 LOW REGISTER

U-0	U-0	U-0	U-0	U-0	U-0	R/W-0	R/W-0
—	—	—	—	—	—	TMODTIME<9:8>(1)	
bit 15							bit 8

R/W-0	R/W-1	R/W-0	R/W-1	R/W-0	R/W-1	R/W-0	R/W-1
TMODTIME<7:0>(1)							
bit 7							bit 0

Legend:		
R = Readable bit	W = Writable bit	U = Unimplemented bit, read as ‘0’
-n = Value at POR	‘1’ = Bit is set	‘0’ = Bit is cleared

bit 15-10 **Unimplemented:** Read as ‘0’

bit 9-0 **TMODTIME<9:0>:** Transition Mode Duration bits(1)

Note 1: The value for TMODTIME<9:0> should be less than the SSTIME<9:0> value.

REGISTER 11-4: DACxCONH: DACx CONTROL HIGH REGISTER

U-0	U-0	U-0	U-0	U-0	U-0	R/W-0	R/W-0
—	—	—	—	—	—	TMCB<9:8>	
bit 15							bit 8

R/W-0	R/W-0	R/W-0	R/W-0	R/W-0	R/W-0	R/W-0	R/W-0
TMCB<7:0>							
bit 7							bit 0

Legend:		
R = Readable bit	W = Writable bit	U = Unimplemented bit, read as ‘0’
-n = Value at POR	‘1’ = Bit is set	‘0’ = Bit is cleared

bit 15-10 **Unimplemented:** Read as ‘0’

bit 9-0 **TMCB<9:0>:** DACx Leading-Edge Blanking bits

These register bits specify the blanking period for the comparator, following changes to the DAC output during Change-of-State (COS), for the input signal selected by the HCFSEL<3:0> bits in Register 11-9.

REGISTER 11-5: DACxCONL: DACx CONTROL LOW REGISTER

R/W-0	R/W-0	R/W-0	U-0	U-0	R/W-0	R/W-0	R/W-0
DACEN	IRQM1(1,2)	IRQM0(1,2)	—	—	CBE	DACOEN	FLTREN
bit 15							bit 8

R/W-0	R/W-0	R/W-0	R/W-0	R/W-0	R/W-0	R/W-0	R/W-0
CMPSTAT	CMPPOL	INSEL2	INSEL1	INSEL0	HYSPOL	HYSSEL1	HYSSEL0
bit 7							bit 0

Legend:		
R = Readable bit	W = Writable bit	U = Unimplemented bit, read as ‘0’
-n = Value at POR	‘1’ = Bit is set	‘0’ = Bit is cleared

bit 15 **DACEN:** Individual DACx Module Enable bit

1 = Enables DACx module
0 = Disables DACx module to reduce power consumption; any pending Slope mode and/or underflow conditions are cleared

bit 14-13 **IRQM<1:0>:** Interrupt Mode select bits(1,2)

11 = Generates an interrupt on either a rising or falling edge detect
10 = Generates an interrupt on a falling edge detect
01 = Generates an interrupt on a rising edge detect
00 = Interrupts are disabled

bit 12-11 **Unimplemented:** Read as ‘0’

Note 1: Changing these bits during operation may generate a spurious interrupt.
2: The edge selection is a post-polarity selection via the CMPPOL bit.

© 2017-2018 Microchip Technology Inc.

REGISTER 11-5: DACxCONL: DACx CONTROL LOW REGISTER (CONTINUED)

bit 10 **CBE:** Comparator Blank Enable bit
1 = Enables the analog comparator output to be blanked (gated off) during the recovery transition following the completion of a slope operation
0 = Disables the blanking signal to the analog comparator; therefore, the analog comparator output is always active

bit 9 **DACOEN:** DACx Output Buffer Enable bit
1 = DACx analog voltage is connected to the DACOUT pin
0 = DACx analog voltage is not connected to the DACOUT pin

bit 8 **FLTREN:** Comparator Digital Filter Enable bit
1 = Digital filter is enabled
0 = Digital filter is disabled

bit 7 **CMPSTAT:** Comparator Status bits
The current state of the comparator output including the CMPPOL selection.

bit 6 **CMPPOL:** Comparator Output Polarity Control bit
1 = Output is inverted
0 = Output is non-inverted

bit 5-3 **INSEL<2:0>:** Comparator Input Source Select bits
Master
111 = Reserved
110 = Reserved
101 = SPGA2 output
100 = SPGA1 output
011 = CMPxD input pin
010 = SPGA3 output
001 = CMPxB input pin
000 = CMPxA input pin
Slave
111 = Reserved
110 = Reserved
101 = SPGA2 output
100 = SPGA1 output
011 = S1CMPxD input pin
010 = SPGA3 output
001 = S1CMPxB input pin
000 = S1CMPxA input pin

bit 2 **HYSPOL:** Comparator Hysteresis Polarity Select bit
1 = Hysteresis is applied to the falling edge of the comparator output
0 = Hysteresis is applied to the rising edge of the comparator output

bit 1-0 **HYSSEL<1:0>:** Comparator Hysteresis Select bits
11 = 45 mv hysteresis
10 = 30 mv hysteresis
01 = 15 mv hysteresis
00 = No hysteresis is selected

Note 1: Changing these bits during operation may generate a spurious interrupt.
2: The edge selection is a post-polarity selection via the CMPPOL bit.

REGISTER 11-6: DACxDATH: DACx DATA HIGH REGISTER

R/W-0	R/W-0	R/W-0	R/W-0	R/W-0	R/W-0	R/W-0	R/W-0
DACDAT<15:8>							
bit 15							bit 8

R/W-0	R/W-0	R/W-0	R/W-0	R/W-0	R/W-0	R/W-0	R/W-0
DACDAT<7:0>							
bit 7							bit 0

Legend:		
R = Readable bit	W = Writable bit	U = Unimplemented bit, read as ‘0’
-n = Value at POR	‘1’ = Bit is set	‘0’ = Bit is cleared

bit 15-0 **DACDAT<15:0>:** DACx Data bits
This register specifies the high DACx data value.

REGISTER 11-7: DACxDATL: DACx DATA LOW REGISTER

R/W-0	R/W-0	R/W-0	R/W-0	R/W-0	R/W-0	R/W-0	R/W-0
DACLOW<15:8>							
bit 15							bit 8

R/W-0	R/W-0	R/W-0	R/W-0	R/W-0	R/W-0	R/W-0	R/W-0
DACLOW<7:0>							
bit 7							bit 0

Legend:		
R = Readable bit	W = Writable bit	U = Unimplemented bit, read as ‘0’
-n = Value at POR	‘1’ = Bit is set	‘0’ = Bit is cleared

bit 15-0 **DACLOW<15:0>:** DACx Low Data bits
In Hysteretic mode, Slope Generator mode and Triangle mode, this register specifies the low data value and/or limit for the DACx module.

© 2017-2018 Microchip Technology Inc.

REGISTER 11-8: SLPxCONH: DACx SLOPE CONTROL HIGH REGISTER

R/W-0	U-0	U-0	U-0	R/W-0	R/W-0	R/W-0	U-0
SLOPEN	—	—	—	HME(1)	TWME(2)	PSE	—
bit 15							bit 8

U-0	U-0	U-0	U-0	U-0	U-0	U-0	U-0
—	—	—	—	—	—	—	—
bit 7							bit 0

Legend:		
R = Readable bit	W = Writable bit	U = Unimplemented bit, read as ‘0’
-n = Value at POR	‘1’ = Bit is set	‘0’ = Bit is cleared

bit 15 **SLOPEN:** Slope Function Enable/On bit
1 = Enables slope function
0 = Disables slope function; slope accumulator is disabled to reduce power consumption

bit 14-12 **Unimplemented:** Read as ‘0’

bit 11 **HME:** Hysteretic Mode Enable bit(1)
1 = Enables Hysteretic mode for DACx
0 = Disables Hysteretic mode for DACx

bit 10 **TWME:** Triangle Wave Mode Enable bit(2)
1 = Enables Triangle Wave mode for DACx
0 = Disables Triangle Wave mode for DACx

bit 9 **PSE:** Positive Slope Mode Enable bit
1 = Slope mode is positive (increasing)
0 = Slope mode is negative (decreasing)

bit 8-0 **Unimplemented:** Read as ‘0’

Note 1: HME mode requires the user to disable the slope function (SLOPEN = 0).
2: TWME mode requires the user to enable the slope function (SLOPEN = 1).

REGISTER 11-9: SLPxCONL: DACx SLOPE CONTROL LOW REGISTER

R/W-0	R/W-0	R/W-0	R/W-0	R/W-0	R/W-0	R/W-0	R/W-0
HCFSEL3	HCFSEL2	HCFSEL1	HCFSEL0	SLPSTOPA3	SLPSTOPA2	SLPSTOPA1	SLPSTOPA0
bit 15							bit 8

R/W-0	R/W-0	R/W-0	R/W-0	R/W-0	R/W-0	R/W-0	R/W-0
SLPSTOPB3	SLPSTOPB2	SLPSTOPB1	SLPSTOPB0	SLPSTRT3	SLPSTRT2	SLPSTRT1	SLPSTRT0
bit 7							bit 0

Legend:		
R = Readable bit	W = Writable bit	U = Unimplemented bit, read as ‘0’
-n = Value at POR	‘1’ = Bit is set0	‘0’ = Bit is cleared

bit 15-12 **HCFSEL<3:0>:** Hysteretic Comparator Function Input Select bits

The selected input signal controls the switching between the DACx high limit (DACxDATH) and the DACx low limit (DACxDATL) as the data source for the PDM DAC. It modifies the polarity of the comparator, and the rising and falling edges initiate the start of the LEB counter (TMCB<9:0> bits in Register 11-4).

Input Selection	Master	Slave
1111	1	1
1100	0	PWM4H
1011	0	PWM3H
1010	0	PWM2H
1001	0	PWM1H
1000	S1PWM4H	S1PWM8H
0111	S1PWM3H	S1PWM7H
0110	S1PWM2H	S1PWM6H
0101	S1PWM1H	S1PWM5H
0100	PWM4H	S1PWM4H
0011	PWM3H	S1PWM3H
0010	PWM2H	S1PWM2H
0001	PWM1H	S1PWM1H
0000	0	0

© 2017-2018 Microchip Technology Inc.

REGISTER 11-9: SLPxCONL: DACx SLOPE CONTROL LOW REGISTER (CONTINUED)

bit 11-8 **SLPSTOPA<3:0>:** Slope Stop A Signal Select bits

The selected Slope Stop A signal is logically OR'd with the selected Slope Stop B signal to terminate the slope function.

Slope Stop A Signal Selection	Master	Slave
1111	1	1
1110	Slave PWM2 Trigger 2	Master PWM8 Trigger 2
1101	Slave PWM1 Trigger 2	Master PWM7 Trigger 2
1000	Master PWM4 Trigger 2	Slave PWM8 Trigger 2
0111	Master PWM3 Trigger 2	Slave PWM7 Trigger 2
0110	Master PWM2 Trigger 2	Slave PWM6 Trigger 2
0101	Master PWM1 Trigger 2	Slave PWM5 Trigger 2
0100	Master PWM4 Trigger 1	Slave PWM4 Trigger 2
0011	Master PWM3 Trigger 1	Slave PWM3 Trigger 2
0010	Master PWM2 Trigger 1	Slave PWM2 Trigger 2
0001	Master PWM1 Trigger 1	Slave PWM1 Trigger 2
0000	0	0

bit 7-4 **SLPSTOPB<3:0>:** Slope Stop B Signal Select bits

The selected Slope Stop B signal is logically OR'd with the selected Slope Stop A signal to terminate the slope function.

Slope Start B Signal Selection	Master	Slave
1111	1	1
0100	S1CMP3 Out	CMP1 Out
0011	S1CMP2 Out	S1CMP3 Out
0010	S1CMP1 Out	S1CMP2 Out
0001	CMP1 Out	S1CMP1 Out
0000	0	0

bit 3-0 **SLPSTRT<3:0>:** Slope Start Signal Select bits

Slope Start Signal Selection	Master	Slave
1111	1	1
1110	Slave PWM2 Trigger 1	Master PWM2 Trigger 1
1101	Slave PWM1 Trigger 1	Master PWM1 Trigger 1
1000	Master PWM4 Trigger 2	Slave PWM8 Trigger 1
0111	Master PWM3 Trigger 2	Slave PWM7 Trigger 1
0110	Master PWM2 Trigger 2	Slave PWM6 Trigger 1
0101	Master PWM1 Trigger 2	Slave PWM5 Trigger 1
0100	Master PWM4 Trigger 1	Slave PWM4 Trigger 1
0011	Master PWM3 Trigger 1	Slave PWM3 Trigger 1
0010	Master PWM2 Trigger 1	Slave PWM2 Trigger 1
0001	Master PWM1 Trigger 1	Slave PWM1 Trigger 1
0000	0	0

© 2017-2018 Microchip Technology Inc.

REGISTER 11-10: SLPxDAT: DACx SLOPE DATA REGISTER[1]

R/W-0	R/W-0	R/W-0	R/W-0	R/W-0	R/W-0	R/W-0	R/W-0
SLPDAT<15:8>							
bit 15							bit 8

R/W-0	R/W-0	R/W-0	R/W-0	R/W-0	R/W-0	R/W-0	R/W-0
SLPDAT<7:0>							
bit 7							bit 0

Legend:		
R = Readable bit	W = Writable bit	U = Unimplemented bit, read as ‘0’
-n = Value at POR	‘1’ = Bit is set	‘0’ = Bit is cleared

bit 15-0 **SLPDAT<15:0>:** Slope Ramp Rate Value bits
The SLPDATx value is in 12.4 format.

Note 1: Register data is left justified.

© 2017-2018 Microchip Technology Inc.

12.0 QUADRATURE ENCODER INTERFACE (QEI) (MASTER/SLAVE)

Note 1: This data sheet summarizes the features of the dsPIC33CH128MP508 family of devices. It is not intended to be a comprehensive resource. For more information, refer to the **"Quadrature Encoder Interface (QEI)"** (DS70000601) in the *"dsPIC33/PIC24 Family Reference Manual"*, which is available from the Microchip web site (www.microchip.com).

2: The QEI is identical for both Master core and Slave core (the x represents the number of the specific module being addressed in Master or Slave).

3: Some registers and associated bits described in this section may not be available on all devices. Refer to **Section 3.2 "Master Memory Organization"** in this data sheet for device-specific register and bit information.

The Quadrature Encoder Interface (QEI) module provides the interface to incremental encoders for obtaining mechanical position data. Quadrature Encoders, also known as incremental encoders or optical encoders, detect position and speed of rotating motion systems. Quadrature Encoders enable closed-loop control of motor control applications, such as Switched Reluctance (SR) and AC Induction Motors (ACIM).

A typical Quadrature Encoder includes a slotted wheel attached to the shaft of the motor and an emitter/detector module that senses the slots in the wheel. Typically, three output channels, Phase A (QEAx), Phase B (QEBx) and Index (INDXx), provide information on the movement of the motor shaft, including distance and direction.

The two channels, Phase A (QEAx) and Phase B (QEBx), are typically 90 degrees out of phase with respect to each other. The Phase A and Phase B channels have a unique relationship. If Phase A leads Phase B, the direction of the motor is deemed positive or forward. If Phase A lags Phase B, the direction of the motor is deemed negative or reverse. The Index pulse occurs once per mechanical revolution and is used as a reference to indicate an absolute position. Figure 12-1 illustrates the Quadrature Encoder Interface signals.

The Quadrature signals from the encoder can have four unique states ('01', '00', '10' and '11') that reflect the relationship between QEAx and QEBx. Figure 12-1 illustrates these states for one count cycle. The order of the states get reversed when the direction of travel changes.

The Quadrature Decoder increments or decrements the 32-bit up/down Position x Counter (POSxCNTH/L) registers for each Change-of-State (COS). The counter increments when QEAx leads QEBx and decrements when QEBx leads QEAx. Table 12-1 shows an overview of the QEI module.

TABLE 12-1: QEI MODULE OVERVIEW

	Number of QEI Modules	Identical (Modules)
Master Core	1	Yes
Slave Core	1	Yes

FIGURE 12-1: QUADRATURE ENCODER INTERFACE SIGNALS

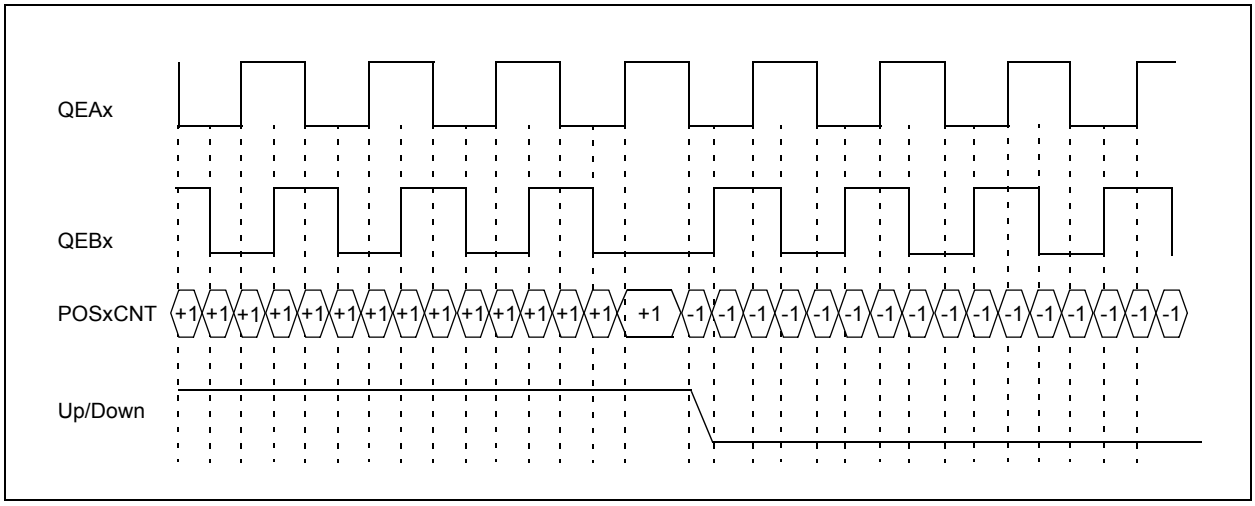

Table 12-2 shows the truth table that describes how the Quadrature signals are decoded.

TABLE 12-2: TRUTH TABLE FOR QUADRATURE ENCODER

Current Quadrature State		Previous Quadrature State		Action
QA	QB	QA	QB	
1	1	1	1	No count or direction change
1	1	1	0	Count up
1	1	0	1	Count down
1	1	0	0	Invalid state change; ignore
1	0	1	1	Count down
1	0	1	0	No count or direction change
1	0	0	1	Invalid state change; ignore
1	0	0	0	Count up
0	1	1	1	Count up
0	1	1	0	Invalid state change; ignore
0	1	0	1	No count or direction change
0	1	0	0	Count down
0	0	1	1	Invalid state change; ignore
0	0	1	0	Count down
0	0	0	1	Count up
0	0	0	0	No count or direction change

Figure 12-2 illustrates the simplified block diagram of the QEI module. The QEI module consists of decoder logic to interpret the Phase A (QEAx) and Phase B (QEBx) signals, and an up/down counter to accumulate the count. The counter pulses are generated when the Quadrature state changes. The count direction information must be maintained in a register until a direction change is detected. The module also includes digital noise filters, which condition the input signal.

The QEI module consists of the following major features:

- Four Input Pins: Two Phase Signals, an Index Pulse and a Home Pulse
- Programmable Digital Noise Filters on Inputs
- Quadrature Decoder providing Counter Pulses and Count Direction
- Count Direction Status
- 4x Count Resolution
- Index (INDXx) Pulse to Reset the Position Counter
- General Purpose 32-Bit Timer/Counter mode
- Interrupts generated by QEI or Counter Events
- 32-Bit Velocity Counter
- 32-Bit Position Counter
- 32-Bit Index Pulse Counter
- 32-Bit Interval Timer
- 32-Bit Position Initialization/Capture Register
- 32-Bit Compare Less Than and Greater Than Registers
- External Up/Down Count mode
- External Gated Count mode
- External Gated Timer mode
- Interval Timer mode

© 2017-2018 Microchip Technology Inc.

FIGURE 12-2: QUADRATURE ENCODER INTERFACE (QEI) MODULE BLOCK DIAGRAM

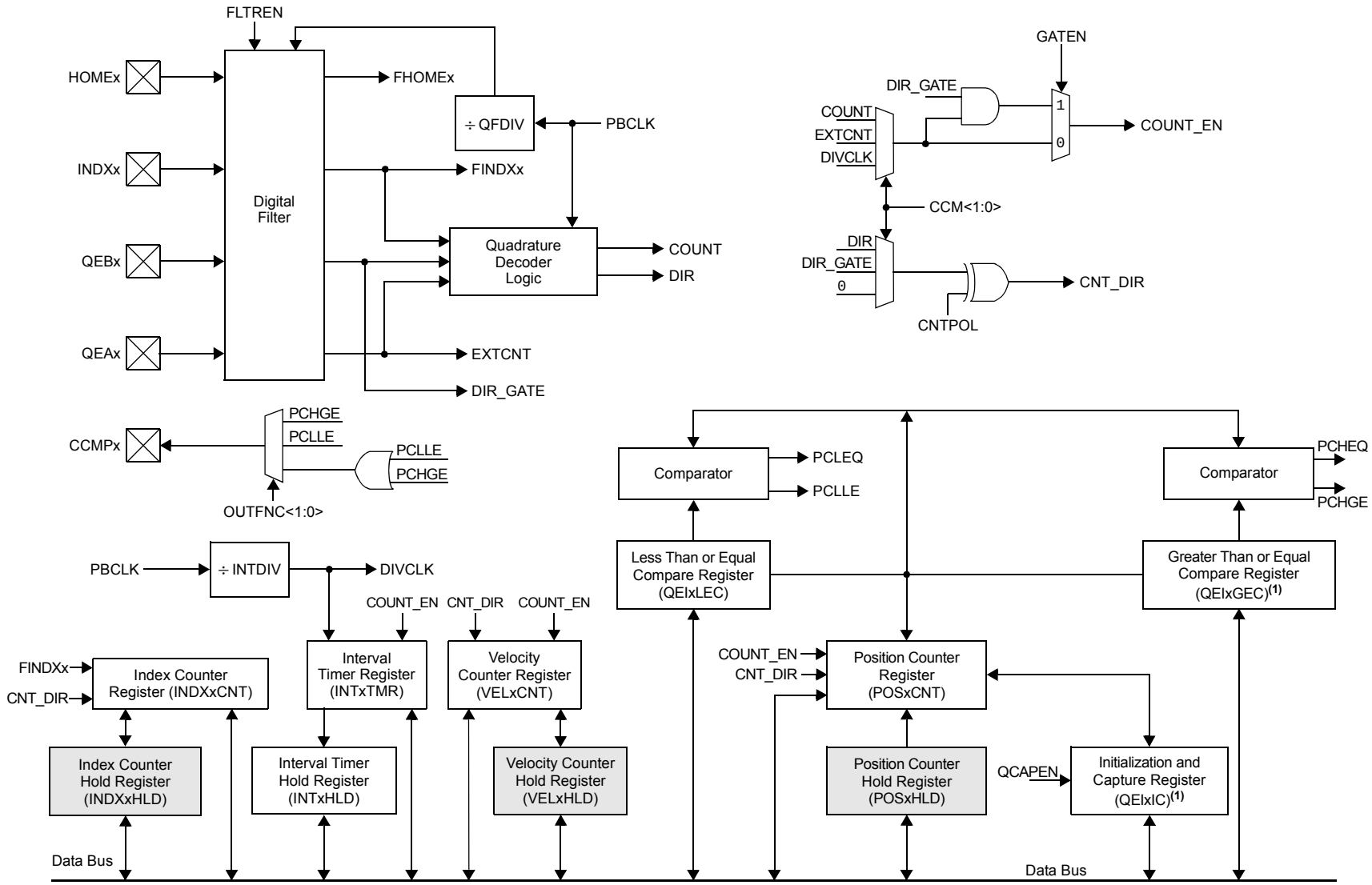

Note 1: These registers map to the same memory location.
2: Shaded registers are not used in 32-bit devices. They are provided to maintain uniformity with 16-bit architecture.

© 2017-2018 Microchip Technology Inc.

12.1 QEI Control and Status Registers

REGISTER 12-1: QEIxCON: QEIx CONTROL REGISTER

R/W-0	U-0	R/W-0	R/W-0	R/W-0	R/W-0	R/W-0	R/W-0
QEIEN	—	QEISIDL	PIMOD2	PIMOD1	PIMOD0	IMV1	IMV0
bit 15							bit 8

U-0	R/W-0	R/W-0	R/W-0	R/W-0	R/W-0	R/W-0	R/W-0
—	INTDIV2	INTDIV1	INTDIV0	CNTPOL	GATEN	CCM1	CCM0
bit 7							bit 0

Legend:			
R = Readable bit	W = Writable bit	U = Unimplemented bit, read as ‘0’	
-n = Value at POR	‘1’ = Bit is set	‘0’ = Bit is cleared	x = Bit is unknown

bit 15 **QEIEN:** Quadrature Encoder Interface Module Enable bit
`1` = QEI module is enabled
`0` = QEI module is disabled; however, SFRs can be read or written

bit 14 **Unimplemented:** Read as ‘`0`’

bit 13 **QEISIDL:** QEI Stop in Idle Mode bit
`1` = Discontinues module operation when device enters Idle mode
`0` = Continues module operation in Idle mode

bit 12-10 **PIMOD<2:0>:** Position Counter Initialization Mode Select bits
`111` = Modulo Count mode for position counter and every Index event resets the position counter
`110` = Modulo Count mode for position counter
`101` = Resets the position counter when the position counter equals the QEIxGEC register
`100` = Second Index event after Home event initializes the position counter with the contents of the QEIxIC register
`011` = First Index event after Home event initializes the position counter with the contents of the QEIxIC register
`010` = Next Index input event initializes the position counter with the contents of the QEIxIC register
`001` = Every Index input event resets the position counter
`000` = Index input event does not affect the position counter

bit 9-8 **IMV<1:0>:** Index Match Value bits
`11` = Index match occurs when QEBx = `1` and QEAx = `1`
`10` = Index match occurs when QEBx = `1` and QEAx = `0`
`01` = Index match occurs when QEBx = `0` and QEAx = `1`
`00` = Index match occurs when QEBx = `0` and QEAx = `0`

bit 7 **Unimplemented:** Read as ‘`0`’

bit 6-4 **INTDIV<2:0>:** Timer Input Clock Prescale Select bits (interval timer, main timer (position counter), velocity counter and Index counter internal clock divider select)
`111` = 1:128 prescale value
`110` = 1:64 prescale value
`101` = 1:32 prescale value
`100` = 1:16 prescale value
`011` = 1:8 prescale value
`010` = 1:4 prescale value
`001` = 1:2 prescale value
`000` = 1:1 prescale value

bit 3 **CNTPOL:** Position, Velocity and Index Counter/Timer Direction Select bit
`1` = Counter direction is negative unless modified by an external up/down signal
`0` = Counter direction is positive unless modified by an external up/down signal

© 2017-2018 Microchip Technology Inc.

REGISTER 12-1: QEIxCON: QEIx CONTROL REGISTER (CONTINUED)

bit 2 **GATEN:** External Count Gate Enable bit
1 = External gate signal controls the position counter/timer operation
0 = External gate signal does not affect the position counter/timer operation

bit 1-0 **CCM<1:0>:** Counter Control Mode Selection bits
11 = Internal timer with External Gate mode
10 = External Clock count with External Gate mode
01 = External Clock count with External Up/Down mode
00 = Quadrature Encoder mode

REGISTER 12-2: QEIxIOCL: QEIx I/O CONTROL LOW REGISTER

R/W-0	R/W-0	R/W-0	R/W-0	R/W-0	R/W-0	R/W-0	R/W-0
QCAPEN	FLTREN	QFDIV2	QFDIV1	QFDIV0	OUTFNC1	OUTFNC0	SWPAB
bit 15							bit 8

R/W-0	R/W-0	R/W-0	R/W-0	R-x	R-x	R-x	R-x
HOMPOL	IDXPOL	QEBPOL	QEAPOL	HOME	INDEX	QEB	QEA
bit 7							bit 0

Legend:			
R = Readable bit	W = Writable bit	U = Unimplemented bit, read as ‘0’	
-n = Value at POR	‘1’ = Bit is set	‘0’ = Bit is cleared	x = Bit is unknown

bit 15 **QCAPEN:** QEIx Position Counter Input Capture by Index Event Enable bit
1 = Index match event (positive edge) triggers a position capture event
0 = Index match event (positive edge) does not trigger a position capture event

bit 14 **FLTREN:** QEAx/QEBx/INDXx/HOMEx Digital Filter Enable bit
1 = Input pin digital filter is enabled
0 = Input pin digital filter is disabled (bypassed)

bit 13-11 **QFDIV<2:0>:** QEAx/QEBx/INDXx/HOMEx Digital Input Filter Clock Divide Select bits
111 = 1:128 clock divide
110 = 1:64 clock divide
101 = 1:32 clock divide
100 = 1:16 clock divide
011 = 1:8 clock divide
010 = 1:4 clock divide
001 = 1:2 clock divide
000 = 1:1 clock divide

bit 10-9 **OUTFNC<1:0>:** QEIx Module Output Function Mode Select bits
11 = The CNTCMPx pin goes high when POSxCNT $\leq$ QEIxLEC or POSxCNT $\geq$ QEIxGEC
10 = The CNTCMPx pin goes high when POSxCNT $\leq$ QEIxLEC
01 = The CNTCMPx pin goes high when POSxCNT $\geq$ QEIxGEC
00 = Output is disabled

bit 8 **SWPAB:** Swap QEAx and QEBx Inputs bit
1 = QEAx and QEBx are swapped prior to Quadrature Decoder logic
0 = QEAx and QEBx are not swapped

bit 7 **HOMPOL:** HOMEx Input Polarity Select bit
1 = Input is inverted
0 = Input is not inverted

REGISTER 12-2: QEIxIOCL: QEIx I/O CONTROL LOW REGISTER (CONTINUED)

bit 6 **IDXPOL:** INDXx Input Polarity Select bit
1 = Input is inverted
0 = Input is not inverted

bit 5 **QEBPOL:** QEBx Input Polarity Select bit
1 = Input is inverted
0 = Input is not inverted

bit 4 **QEAPOL:** QEAx Input Polarity Select bit
1 = Input is inverted
0 = Input is not inverted

bit 3 **HOME:** Status of HOMEx Input Pin after Polarity Control bit (read-only)
1 = Pin is at logic '1' if the HOMPOL bit is set to '0'; pin is at logic '0' if the HOMPOL bit is set to '1'
0 = Pin is at logic '0' if the HOMPOL bit is set to '0'; pin is at logic '1' if the HOMPOL bit is set to '1'

bit 2 **INDEX:** Status of INDXx Input Pin After Polarity Control bit (read-only)
1 = Pin is at logic '1' if the IDXPOL bit is set to '0'; pin is at logic '0' if the IDXPOL bit is set to '1'
0 = Pin is at logic '0' if the IDXPOL bit is set to '0'; pin is at logic '1' if the IDXPOL bit is set to '1'

bit 1 **QEB:** Status of QEBx Input Pin After Polarity Control and SWPAB Pin Swapping bit (read-only)
1 = Physical pin, QEBx, is at logic '1' if the QEBPOL bit is set to '0' and the SWPAB bit is set to '0';
physical pin, QEBx, is at logic '0' if the QEBPOL bit is set to '1' and the SWPAB bit is set to '0';
physical pin, QEAx, is at logic '1' if the QEBPOL bit is set to '0' and the SWPAB bit is set to '1';
physical pin, QEAx, is at logic '0' if the QEBPOL bit is set to '1' and the SWPAB bit is set to '1'
0 = Physical pin, QEBx, is at logic '0' if the QEBPOL bit is set to '0' and the SWPAB bit is set to '0';
physical pin, QEBx, is at logic '1' if the QEBPOL bit is set to '1' and the SWPAB bit is set to '0';
physical pin, QEAx, is at logic '0' if the QEBPOL bit is set to '0' and the SWPAB bit is set to '1';
physical pin, QEAx, is at logic '1' if the QEBPOL bit is set to '1' and the SWPAB bit is set to '1'

bit 0 **QEA:** Status of QEAx Input Pin After Polarity Control and SWPAB Pin Swapping bit (read-only)
1 = Physical pin, QEAx, is at logic '1' if the QEAPOL bit is set to '0' and the SWPAB bit is set to '0';
physical pin, QEAx, is at logic '0' if the QEAPOL bit is set to '1' and the SWPAB bit is set to '0';
physical pin, QEBx, is at logic '1' if the QEAPOL bit is set to '0' and the SWPAB bit is set to '1';
physical pin, QEBx, is at logic '0' if the QEAPOL bit is set to '1' and the SWPAB bit is set to '1'
0 = Physical pin, QEAx, is at logic '0' if the QEAPOL bit is set to '0' and the SWPAB bit is set to '0';
physical pin, QEAx, is at logic '1' if the QEAPOL bit is set to '1' and the SWPAB bit is set to '0';
physical pin, QEBx, is at logic '0' if the QEAPOL bit is set to '0' and the SWPAB bit is set to '1'

© 2017-2018 Microchip Technology Inc.

REGISTER 12-3: QEIxIOCH: QEIx I/O CONTROL HIGH REGISTER

U-0	U-0	U-0	U-0	U-0	U-0	U-0	U-0
—	—	—	—	—	—	—	—
bit 15							bit 8

U-0	U-0	U-0	U-0	U-0	U-0	U-0	R/W-0
—	—	—	—	—	—	—	HCAPEN
bit 7							bit 0

Legend:			
R = Readable bit	W = Writable bit	U = Unimplemented bit, read as ‘0’	
-n = Value at POR	‘1’ = Bit is set	‘0’ = Bit is cleared	x = Bit is unknown

bit 15-1 **Unimplemented:** Read as ‘0’

bit 0 **HCAPEN:** Position Counter Input Capture by Home Event Enable bit
1 = HOMEx input event (positive edge) triggers a position capture event
0 = HOMEx input event (positive edge) does not trigger a position capture event

REGISTER 12-4: QEIxSTAT: QEIx STATUS REGISTER

U-0	U-0	HS/R/C-0	R/W-0	HS/R/C-0	R/W-0	HS/R/C-0	R/W-0
—	—	PCHEQIRQ	PCHEQIEN	PCLEQIRQ	PCLEQIEN	POSOVIRQ	POSOVIEN
bit 15							bit 8

HS/R/C-0	R/W-0	HS/R/C-0	R/W-0	HS/R/C-0	R/W-0	HS/R/C-0	R/W-0
PCIIRQ(1)	PCIIEN	VELOVIRQ	VELOVIEN	HOMIRQ	HOMIEN	IDXIRQ	IDXIEN
bit 7							bit 0

Legend:	C = Clearable bit	HS = Hardware Settable bit	
R = Readable bit	W = Writable bit	U = Unimplemented bit, read as ‘0’	
-n = Value at POR	‘1’ = Bit is set	‘0’ = Bit is cleared	x = Bit is unknown

bit 15-14 **Unimplemented:** Read as ‘0’

bit 13 **PCHEQIRQ:** Position Counter Greater Than Compare Status bit
1 = POSxCNT ≥ QEIxGEC
0 = POSxCNT < QEIxGEC

bit 12 **PCHEQIEN:** Position Counter Greater Than Compare Interrupt Enable bit
1 = Interrupt is enabled
0 = Interrupt is disabled

bit 11 **PCLEQIRQ:** Position Counter Less Than Compare Status bit
1 = POSxCNT ≤ QEIxLEC
0 = POSxCNT > QEIxLEC

bit 10 **PCLEQIEN:** Position Counter Less Than Compare Interrupt Enable bit
1 = Interrupt is enabled
0 = Interrupt is disabled

bit 9 **POSOVIRQ:** Position Counter Overflow Status bit
1 = Overflow has occurred
0 = No overflow has occurred

bit 8 **POSOVIEN:** Position Counter Overflow Interrupt Enable bit
1 = Interrupt is enabled
0 = Interrupt is disabled

bit 7 **PCIIRQ:** Position Counter (Homing) Initialization Process Complete Status bit(1)
1 = POSxCNT was reinitialized
0 = POSxCNT was not reinitialized

bit 6 **PCIIEN:** Position Counter (Homing) Initialization Process Complete Interrupt Enable bit
1 = Interrupt is enabled
0 = Interrupt is disabled

bit 5 **VELOVIRQ:** Velocity Counter Overflow Status bit
1 = Overflow has occurred
0 = No overflow has occurred

bit 4 **VELOVIEN:** Velocity Counter Overflow Interrupt Enable bit
1 = Interrupt is enabled
0 = Interrupt is disabled

bit 3 **HOMIRQ:** Status Flag for Home Event Status bit
1 = Home event has occurred
0 = No Home event has occurred

Note 1: This status bit is only applicable to PIMOD<2:0> modes, ‘011’ and ‘100’.

© 2017-2018 Microchip Technology Inc.

REGISTER 12-4: QEIxSTAT: QEIx STATUS REGISTER (CONTINUED)

bit 2 **HOMIEN:** Home Input Event Interrupt Enable bit
1 = Interrupt is enabled
0 = Interrupt is disabled

bit 1 **IDXIRQ:** Status Flag for Index Event Status bit
1 = Index event has occurred
0 = No Index event has occurred

bit 0 **IDXIEN:** Index Input Event Interrupt Enable bit
1 = Interrupt is enabled
0 = Interrupt is disabled

Note 1: This status bit is only applicable to PIMOD<2:0> modes, '011' and '100'.

REGISTER 12-5: POSxCNTL: POSITION x COUNTER REGISTER LOW

R/W-0	R/W-0	R/W-0	R/W-0	R/W-0	R/W-0	R/W-0	R/W-0
POSCNT<15:8>							
bit 15							bit 8

R/W-0	R/W-0	R/W-0	R/W-0	R/W-0	R/W-0	R/W-0	R/W-0
POSCNT<7:0>							
bit 7							bit 0

Legend:			
R = Readable bit	W = Writable bit	U = Unimplemented bit, read as '0'	
-n = Value at POR	'1' = Bit is set	'0' = Bit is cleared	x = Bit is unknown

bit 15-0 **POSCNT<15:0>:** Position Counter Value bits

REGISTER 12-6: POSxCNTH: POSITION x COUNTER REGISTER HIGH

R/W-0	R/W-0	R/W-0	R/W-0	R/W-0	R/W-0	R/W-0	R/W-0
POSCNT<31:24>							
bit 15							bit 8

R/W-0	R/W-0	R/W-0	R/W-0	R/W-0	R/W-0	R/W-0	R/W-0
POSCNT<23:16>							
bit 7							bit 0

Legend:			
R = Readable bit	W = Writable bit	U = Unimplemented bit, read as '0'	
-n = Value at POR	'1' = Bit is set	'0' = Bit is cleared	x = Bit is unknown

bit 15-0 **POSCNT<31:16>:** Position Counter Value bits

REGISTER 12-7: POSxHLDL: POSITION x COUNTER HOLD REGISTER LOW

R/W-0	R/W-0	R/W-0	R/W-0	R/W-0	R/W-0	R/W-0	R/W-0
POSHLD<15:8>							
bit 15							bit 8

R/W-0	R/W-0	R/W-0	R/W-0	R/W-0	R/W-0	R/W-0	R/W-0
POSHLD<7:0>							
bit 7							bit 0

Legend:			
R = Readable bit	W = Writable bit	U = Unimplemented bit, read as ‘0’	
-n = Value at POR	‘1’ = Bit is set	‘0’ = Bit is cleared	x = Bit is unknown

bit 15-0 **POSHLD<15:0>:** Position Counter Hold for Reading/Writing Position x Counter Register (POSxCNT) bits

REGISTER 12-8: POSxHLDH: POSITION x COUNTER HOLD REGISTER HIGH

R/W-0	R/W-0	R/W-0	R/W-0	R/W-0	R/W-0	R/W-0	R/W-0
POSHLD<31:24>							
bit 15							bit 8

R/W-0	R/W-0	R/W-0	R/W-0	R/W-0	R/W-0	R/W-0	R/W-0
POSHLD<23:16>							
bit 7							bit 0

Legend:			
R = Readable bit	W = Writable bit	U = Unimplemented bit, read as ‘0’	
-n = Value at POR	‘1’ = Bit is set	‘0’ = Bit is cleared	x = Bit is unknown

bit 15-0 **POSHLD<31:16>:** Position Counter Hold for Reading/Writing Position x Counter Register (POSxCNT) bits

© 2017-2018 Microchip Technology Inc.

REGISTER 12-9: VELxCNTL: VELOCITY x COUNTER REGISTER LOW

R/W-0	R/W-0	R/W-0	R/W-0	R/W-0	R/W-0	R/W-0	R/W-0
VELCNT<15:8>							
bit 15							bit 8

R/W-0	R/W-0	R/W-0	R/W-0	R/W-0	R/W-0	R/W-0	R/W-0
VELCNT<7:0>							
bit 7							bit 0

Legend:			
R = Readable bit	W = Writable bit	U = Unimplemented bit, read as ‘0’	
-n = Value at POR	‘1’ = Bit is set	‘0’ = Bit is cleared	x = Bit is unknown

bit 15-0 **VELCNT<15:0>:** Velocity Counter Value bits

REGISTER 12-10: VELxCNTH: VELOCITY x COUNTER REGISTER HIGH

R/W-0	R/W-0	R/W-0	R/W-0	R/W-0	R/W-0	R/W-0	R/W-0
VELCNT<31:24>							
bit 15							bit 8

R/W-0	R/W-0	R/W-0	R/W-0	R/W-0	R/W-0	R/W-0	R/W-0
VELCNT<23:16>							
bit 7							bit 0

Legend:			
R = Readable bit	W = Writable bit	U = Unimplemented bit, read as ‘0’	
-n = Value at POR	‘1’ = Bit is set	‘0’ = Bit is cleared	x = Bit is unknown

bit 15-0 **VELCNT<31:16>:** Velocity Counter Value bits

REGISTER 12-11: VELxHLDL: VELOCITY x COUNTER HOLD REGISTER LOW

R/W-0	R/W-0	R/W-0	R/W-0	R/W-0	R/W-0	R/W-0	R/W-0
VELHLD<15:8>							
bit 15							bit 8
R/W-0	R/W-0	R/W-0	R/W-0	R/W-0	R/W-0	R/W-0	R/W-0
VELHLD<7:0>							
bit 7							bit 0

Legend:			
R = Readable bit	W = Writable bit	U = Unimplemented bit, read as ‘0’	
-n = Value at POR	‘1’ = Bit is set	‘0’ = Bit is cleared	x = Bit is unknown

bit 15-0 **VELHLD<15:0>:** Velocity Counter Hold Value bits

REGISTER 12-12: VELxHLDH: VELOCITY x COUNTER HOLD REGISTER HIGH

R/W-0	R/W-0	R/W-0	R/W-0	R/W-0	R/W-0	R/W-0	R/W-0
VELHLD<31:24>							
bit 15							bit 8
R/W-0	R/W-0	R/W-0	R/W-0	R/W-0	R/W-0	R/W-0	R/W-0
VELHLD<23:16>							
bit 7							bit 0

Legend:			
R = Readable bit	W = Writable bit	U = Unimplemented bit, read as ‘0’	
-n = Value at POR	‘1’ = Bit is set	‘0’ = Bit is cleared	x = Bit is unknown

bit 15-0 **VELHLD<31:16>:** Velocity Counter Hold Value bits

© 2017-2018 Microchip Technology Inc.

REGISTER 12-13: INTxTMRL: INTERVAL x TIMER REGISTER LOW

R/W-0	R/W-0	R/W-0	R/W-0	R/W-0	R/W-0	R/W-0	R/W-0
INTTMR<15:8>							
bit 15							bit 8

R/W-0	R/W-0	R/W-0	R/W-0	R/W-0	R/W-0	R/W-0	R/W-0
INTTMR<7:0>							
bit 7							bit 0

Legend:			
R = Readable bit	W = Writable bit	U = Unimplemented bit, read as ‘0’	
-n = Value at POR	‘1’ = Bit is set	‘0’ = Bit is cleared	x = Bit is unknown

bit 15-0 **INTTMR<15:0>:** Interval Timer Value bits

REGISTER 12-14: INTxTMRH: INTERVAL x TIMER REGISTER HIGH

R/W-0	R/W-0	R/W-0	R/W-0	R/W-0	R/W-0	R/W-0	R/W-0
INTTMR<31:24>							
bit 15							bit 8

R/W-0	R/W-0	R/W-0	R/W-0	R/W-0	R/W-0	R/W-0	R/W-0
INTTMR<23:16>							
bit 7							bit 0

Legend:			
R = Readable bit	W = Writable bit	U = Unimplemented bit, read as ‘0’	
-n = Value at POR	‘1’ = Bit is set	‘0’ = Bit is cleared	x = Bit is unknown

bit 15-0 **INTTMR<31:16>:** Interval Timer Value bits

REGISTER 12-15: INTXxHLDL: INDEX x COUNTER HOLD REGISTER LOW

R/W-0	R/W-0	R/W-0	R/W-0	R/W-0	R/W-0	R/W-0	R/W-0
INTHLD<15:8>							
bit 15							bit 8

R/W-0	R/W-0	R/W-0	R/W-0	R/W-0	R/W-0	R/W-0	R/W-0
INTHLD<7:0>							
bit 7							bit 0

Legend:			
R = Readable bit	W = Writable bit	U = Unimplemented bit, read as ‘0’	
-n = Value at POR	‘1’ = Bit is set	‘0’ = Bit is cleared	x = Bit is unknown

bit 15-0 **INTXHLD<15:0>:** Hold for Reading/Writing Interval Timer Value Register (INDXCNT) bits

REGISTER 12-16: INTXxHLDH: INDEX x COUNTER HOLD REGISTER HIGH

R/W-0	R/W-0	R/W-0	R/W-0	R/W-0	R/W-0	R/W-0	R/W-0
INTHLD<31:24>							
bit 15							bit 8

R/W-0	R/W-0	R/W-0	R/W-0	R/W-0	R/W-0	R/W-0	R/W-0
INTHLD<23:16>							
bit 7							bit 0

Legend:			
R = Readable bit	W = Writable bit	U = Unimplemented bit, read as ‘0’	
-n = Value at POR	‘1’ = Bit is set	‘0’ = Bit is cleared	x = Bit is unknown

bit 15-0 **INTHLD<31:16>:** Hold for Reading/Writing Interval Timer Value Register (INDXCNT) bits

© 2017-2018 Microchip Technology Inc.

REGISTER 12-17: INDXxCNTL: INDEX x COUNTER REGISTER LOW

R/W-0	R/W-0	R/W-0	R/W-0	R/W-0	R/W-0	R/W-0	R/W-0
INDXCNT<15:8>							
bit 15							bit 8

R/W-0	R/W-0	R/W-0	R/W-0	R/W-0	R/W-0	R/W-0	R/W-0
INDXCNT<7:0>							
bit 7							bit 0

Legend:			
R = Readable bit	W = Writable bit	U = Unimplemented bit, read as ‘0’	
-n = Value at POR	‘1’ = Bit is set	‘0’ = Bit is cleared	x = Bit is unknown

bit 15-0 **INDXCNT<15:0>:** Index Counter Value bits

REGISTER 12-18: INDXxCNTH: INDEX x COUNTER REGISTER HIGH

R/W-0	R/W-0	R/W-0	R/W-0	R/W-0	R/W-0	R/W-0	R/W-0
INDXCNT<31:24>							
bit 15							bit 8

R/W-0	R/W-0	R/W-0	R/W-0	R/W-0	R/W-0	R/W-0	R/W-0
INDXCNT<23:16>							
bit 7							bit 0

Legend:			
R = Readable bit	W = Writable bit	U = Unimplemented bit, read as ‘0’	
-n = Value at POR	‘1’ = Bit is set	‘0’ = Bit is cleared	x = Bit is unknown

bit 15-0 **INDXCNT<31:16>:** Index Counter Value bits

REGISTER 12-19: INDXxHLDL: INDEX x COUNTER HOLD REGISTER LOW

R/W-0	R/W-0	R/W-0	R/W-0	R/W-0	R/W-0	R/W-0	R/W-0
INDXHLD<15:8>							
bit 15							bit 8

R/W-0	R/W-0	R/W-0	R/W-0	R/W-0	R/W-0	R/W-0	R/W-0
INDXHLD<7:0>							
bit 7							bit 0

Legend:			
R = Readable bit	W = Writable bit	U = Unimplemented bit, read as ‘0’	
-n = Value at POR	‘1’ = Bit is set	‘0’ = Bit is cleared	x = Bit is unknown

bit 15-0 **INDXHLD<15:0>:** Hold for Reading/Writing Index x Counter Register (INDXCNT) bits

REGISTER 12-20: INDXxHLDH: INDEX x COUNTER HOLD REGISTER HIGH

R/W-0	R/W-0	R/W-0	R/W-0	R/W-0	R/W-0	R/W-0	R/W-0
INDXHLD<31:24>							
bit 15							bit 8

R/W-0	R/W-0	R/W-0	R/W-0	R/W-0	R/W-0	R/W-0	R/W-0
INDXHLD<23:16>							
bit 7							bit 0

Legend:			
R = Readable bit	W = Writable bit	U = Unimplemented bit, read as ‘0’	
-n = Value at POR	‘1’ = Bit is set	‘0’ = Bit is cleared	x = Bit is unknown

bit 15-0 **INDXHLD<31:16>:** Hold for Reading/Writing Index x Counter Register (INDXCNT) bits

© 2017-2018 Microchip Technology Inc.

REGISTER 12-21: QEIxGECL: QEIx GREATER THAN OR EQUAL COMPARE REGISTER LOW

R/W-0	R/W-0	R/W-0	R/W-0	R/W-0	R/W-0	R/W-0	R/W-0
QEIGEC<15:8>							
bit 15							bit 8

R/W-0	R/W-0	R/W-0	R/W-0	R/W-0	R/W-0	R/W-0	R/W-0
QEIGEC<7:0>							
bit 7							bit 0

Legend:			
R = Readable bit	W = Writable bit	U = Unimplemented bit, read as ‘0’	
-n = Value at POR	‘1’ = Bit is set	‘0’ = Bit is cleared	x = Bit is unknown

bit 15-0 **QEIGEC<15:0>:** QEIx Greater Than or Equal Compare bits

REGISTER 12-22: QEIxGECH: QEIx GREATER THAN OR EQUAL COMPARE REGISTER HIGH

R/W-0	R/W-0	R/W-0	R/W-0	R/W-0	R/W-0	R/W-0	R/W-0
QEIGEC<31:24>							
bit 15							bit 8

R/W-0	R/W-0	R/W-0	R/W-0	R/W-0	R/W-0	R/W-0	R/W-0
QEIGEC<23:16>							
bit 7							bit 0

Legend:			
R = Readable bit	W = Writable bit	U = Unimplemented bit, read as ‘0’	
-n = Value at POR	‘1’ = Bit is set	‘0’ = Bit is cleared	x = Bit is unknown

bit 15-0 **QEIGEC<31:16>:** QEIx Greater Than or Equal Compare bits

REGISTER 12-23: QEIxLECL: QEIx LESS THAN OR EQUAL COMPARE REGISTER LOW

R/W-0	R/W-0	R/W-0	R/W-0	R/W-0	R/W-0	R/W-0	R/W-0
QEIIC<31:24>							
bit 15							bit 8

R/W-0	R/W-0	R/W-0	R/W-0	R/W-0	R/W-0	R/W-0	R/W-0
QEIIC<23:16>							
bit 7							bit 0

Legend:			
R = Readable bit	W = Writable bit	U = Unimplemented bit, read as ‘0’	
-n = Value at POR	‘1’ = Bit is set	‘0’ = Bit is cleared	x = Bit is unknown

bit 15-0 **QEIIC<31:16>:** QEIx Less Than or Equal Compare bits

REGISTER 12-24: QEIxLECH: QEIx LESS THAN OR EQUAL COMPARE REGISTER HIGH

R/W-0	R/W-0	R/W-0	R/W-0	R/W-0	R/W-0	R/W-0	R/W-0
QEIIC<15:8>							
bit 15							bit 8

R/W-0	R/W-0	R/W-0	R/W-0	R/W-0	R/W-0	R/W-0	R/W-0
QEIIC<7:0>							
bit 7							bit 0

Legend:			
R = Readable bit	W = Writable bit	U = Unimplemented bit, read as ‘0’	
-n = Value at POR	‘1’ = Bit is set	‘0’ = Bit is cleared	x = Bit is unknown

bit 15-0 **QEIIC<15:0>:** QEIx Less Than or Equal Compare bits

© 2017-2018 Microchip Technology Inc.

13.0 UNIVERSAL ASYNCHRONOUS RECEIVER TRANSMITTER (UART)

Note 1: This data sheet summarizes the features of the dsPIC33CH128MP508 family of devices. It is not intended to be a comprehensive reference source. To complement the information in this data sheet, refer to **"Multiprotocol Universal Asynchronous Receiver Transmitter (UART) Module"** (DS70005288) in the *"dsPIC33/PIC24 Family Reference Manual"*, which is available from the Microchip web site (www.microchip.com).

2: The UART is identical for both Master core and Slave core. The x is common for both Master core and Slave core (where the x represents the number of the specific module being addressed). The number of UART modules available on the Master core and Slave core is different and they are located in different SFR locations.

3: All associated register names are the same on the Master core and the Slave core. The Slave code will be developed in a separate project in MPLAB® X IDE with the device selection, dsPIC33CH128MP508**S1**, where the **S1** indicates the Slave device. The Master UART is UART1 and UART2, and the Slave UART is UART1.

Table 13-1 shows an overview of the module.

TABLE 13-1: UART MODULE OVERVIEW

	Number of UART Modules	Identical (Modules)
Master Core	2	Yes
Slave Core	1	Yes

The Universal Asynchronous Receiver Transmitter (UART) is a flexible serial communication peripheral used to interface dsPIC® microcontrollers with other equipment, including computers and peripherals. The UART is a full-duplex, asynchronous communication channel that can be used to implement protocols, such as RS-232 and RS-485. The UART also supports the following hardware extensions:

- LIN/J2602
- IrDA®
- Direct Matrix Architecture (DMX)
- Smart Card

The primary features of the UART are:

- Full or Half-Duplex Operation
- Up to 8-Deep TX and RX First In, First Out (FIFO) Buffers
- 8-Bit or 9-Bit Data Width
- Configurable Stop Bit Length
- Flow Control
- Auto-Baud Calibration
- Parity, Framing and Buffer Overrun Error Detection
- Address Detect
- Break Transmission
- Transmit and Receive Polarity Control
- Manchester Encoder/Decoder
- Operation in Sleep mode
- Wake from Sleep on Sync Break Received Interrupt

13.1 Architectural Overview

The UART transfers bytes of data, to and from device pins, using First-In First-Out (FIFO) buffers up to eight bytes deep. The status of the buffers and data is made available to user software through Special Function Registers (SFRs). The UART implements multiple interrupt channels for handling transmit, receive and error events. A simplified block diagram of the UART is shown in Figure 13-1.

FIGURE 13-1: SIMPLIFIED UARTx BLOCK DIAGRAM

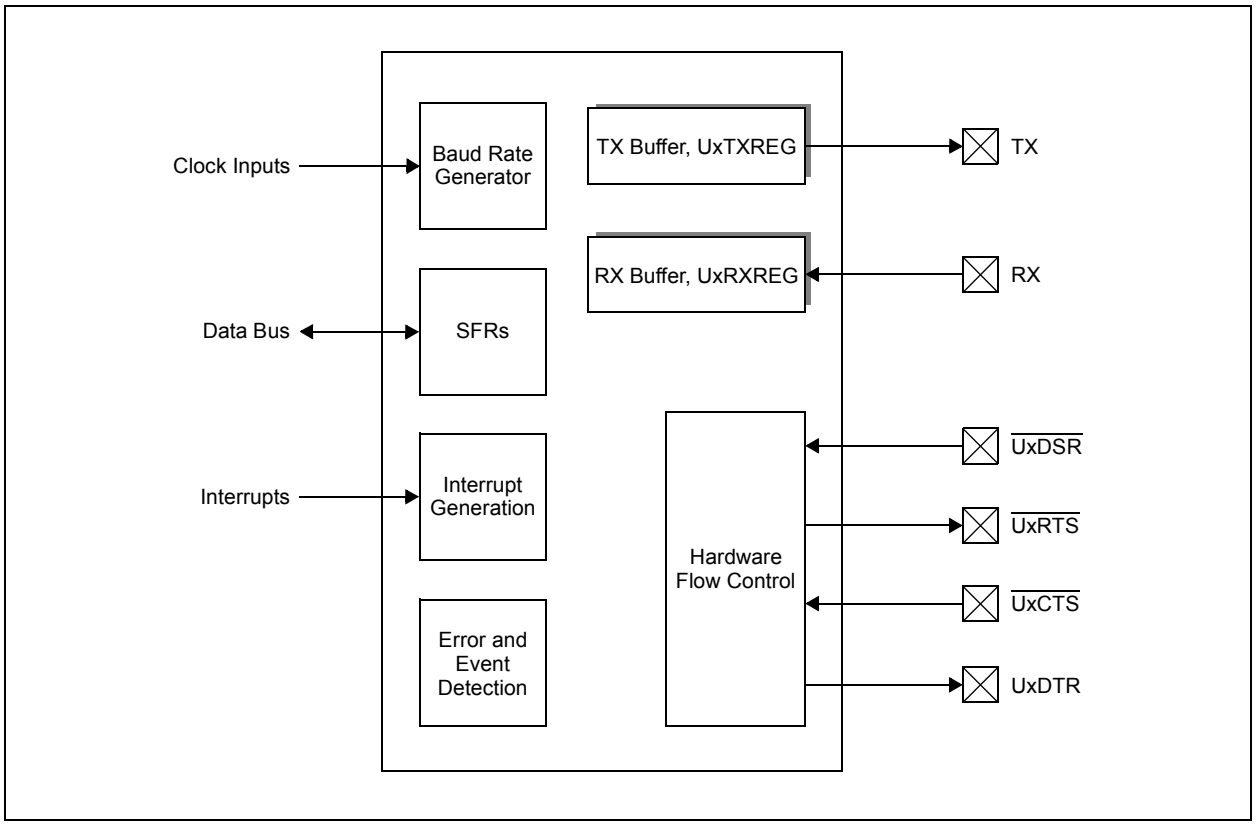

© 2017-2018 Microchip Technology Inc.

13.2 Character Frame

A typical UART character frame is shown in Figure 13-2. The Idle state is high with a 'Start' condition indicated by a falling edge. The Start bit is followed by the number of data, parity/address detect and Stop bits defined by the MOD<3:0> (UxMODE<3:0>) bits selected.

FIGURE 13-2: UART CHARACTER FRAME

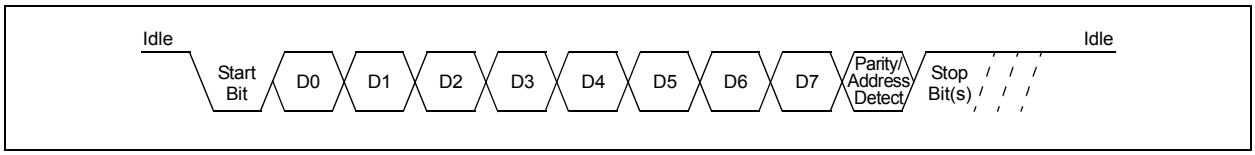

13.3 Data Buffers

Both transmit and receive functions use buffers to store data shifted to/from the pins. These buffers are FIFOs and are accessed by reading the SFRs, UxTXREG and UxRXREG, respectively. Each data buffer has multiple flags associated with its operation to allow software to read the status. Interrupts can also be configured based on the space available in the buffers. The transmit and receive buffers can be cleared and their pointers reset using the associated TX/RX Buffer Empty Status bits, UTXBE (UxSTAH<5>) and URXBE (UxSTAH<1>).

13.4 Protocol Extensions

The UART provides hardware support for LIN/J2602, IrDA®, DMX and smart card protocol extensions to reduce software overhead. A protocol extension is enabled by writing a value to the MOD<3:0> (UxMODE<3:0>) selection bits and further configured using the UARTx Timing Parameter registers, UxP1 (Register 13-9), UxP2 (Register 13-10), UxP3 (Register 13-11) and UxP3H (Register 13-12). Details regarding operation and usage are discussed in their respective chapters. Not all protocols are available on all devices.

13.5 UART Control/Status Registers

REGISTER 13-1: UxMODE: UARTx CONFIGURATION REGISTER

R/W-0	U-0	R/W-0	R/W-0	R/W-0	U-0	R/W-0	HC/R/W-0(1)
UARTEN	—	USIDL	WAKE	RXBIMD	—	BRKOVR	UTXBRK
bit 15							bit 8

R/W-0	HC/R/W-0	R/W-0	R/W-0	R/W-0	R/W-0	R/W-0	R/W-0
BRGH	ABAUD	UTXEN	URXEN	MOD3	MOD2	MOD1	MOD0
bit 7							bit 0

Legend:	HC = Hardware Clearable bit		
R = Readable bit	W = Writable bit	U = Unimplemented bit, read as ‘0’	
-n = Value at POR	‘1’ = Bit is set	‘0’ = Bit is cleared	x = Bit is unknown

bit 15 **UARTEN:** UART Enable bit
1 = UART is ready to transmit and receive
0 = UART state machine, FIFO Buffer Pointers and counters are reset; registers are readable and writable

bit 14 **Unimplemented:** Read as ‘0’

bit 13 **USIDL:** UART Stop in Idle Mode bit
1 = Discontinues module operation when device enters Idle mode
0 = Continues module operation in Idle mode

bit 12 **WAKE:** Wake-up Enable bit
1 = Module will continue to sample the RX pin – interrupt generated on falling edge, bit cleared in hardware on following rising edge; if ABAUD is set, Auto-Baud Detection (ABD) will begin immediately
0 = RX pin is not monitored nor rising edge detected

bit 11 **RXBIMD:** Receive Break Interrupt Mode bit
1 = RXBKIF flag when a minimum of 23 (DMX)/11 (asynchronous or LIN/J2602) low bit periods are detected
0 = RXBKIF flag when the Break makes a low-to-high transition after being low for at least 23/11 bit periods

bit 10 **Unimplemented:** Read as ‘0’

bit 9 **BRKOVR:** Send Break Software Override bit
Overrides the TX Data Line:
1 = Makes the TX line active (Output 0 when UTXINV = 0, Output 1 when UTXINV = 1)
0 = TX line is driven by the shifter

bit 8 **UTXBRK:** UART Transmit Break bit(1)
1 = Sends Sync Break on next transmission; cleared by hardware upon completion
0 = Sync Break transmission is disabled or has completed

bit 7 **BRGH:** High Baud Rate Select bit
1 = High Speed: Baud rate is baudclk/4
0 = Low Speed: Baud rate is baudclk/16

bit 6 **ABAUD:** Auto-Baud Detect Enable bit (read-only when MOD<3:0> = 1xxx)
1 = Enables baud rate measurement on the next character – requires reception of a Sync field (55h); cleared in hardware upon completion
0 = Baud rate measurement is disabled or has completed

Note 1: R/HS/HC in DMX and LIN mode.
2: These modes are not available on all devices.

© 2017-2018 Microchip Technology Inc.

REGISTER 13-1: UxMODE: UARTx CONFIGURATION REGISTER (CONTINUED)

bit 5 **UTXEN:** UART Transmit Enable bit

1 = Transmit enabled – except during Auto-Baud Detection
0 = Transmit disabled – all transmit counters, pointers and state machines are reset; TX buffer is not flushed, status bits are not reset

bit 4 **URXEN:** UART Receive Enable bit

1 = Receive enabled – except during Auto-Baud Detection
0 = Receive disabled – all receive counters, pointers and state machines are reset; RX buffer is not flushed, status bits are not reset

bit 3-0 **MOD<3:0>:** UART Mode bits

Other = Reserved
1111 = Smart card(2)
1110 = IrDA®(2)
1101 = Reserved
1100 = LIN Master/Slave
1011 = LIN Slave only
1010 = DMX(2)
1001 = Reserved
1000 = Reserved
0111 = Reserved
0110 = Reserved
0101 = Reserved
0100 = Asynchronous 9-bit UART with address detect, ninth bit = 1 signals address
0011 = Asynchronous 8-bit UART without address detect, ninth bit is used as an even parity bit
0010 = Asynchronous 8-bit UART without address detect, ninth bit is used as an odd parity bit
0001 = Asynchronous 7-bit UART
0000 = Asynchronous 8-bit UART

Note 1: R/HS/HC in DMX and LIN mode.
2: These modes are not available on all devices.

REGISTER 13-2: UxMODEH: UARTx CONFIGURATION REGISTER HIGH

R/W-0	R-0	U-0	U-0	R/W-0	R/W-0	R/W-0	R/W-0
SLPEN	ACTIVE	—	—	BCLKMOD	BCLKSEL1	BCLKSEL0	HALFDPLX
bit 15							bit 8

R/W-0	R/W-0	R/W-0	R/W-0	R/W-0	R/W-0	R/W-0	R/W-0
RUNOVF	URXINV	STSEL1	STSEL0	C0EN	UTXINV	FLO1	FLO0
bit 7							bit 0

Legend:			
R = Readable bit	W = Writable bit	U = Unimplemented bit, read as ‘0’	
-n = Value at POR	‘1’ = Bit is set	‘0’ = Bit is cleared	x = Bit is unknown

bit 15 **SLPEN:** Run During Sleep Enable bit
1 = UART BRG clock runs during Sleep
0 = UART BRG clock is turned off during Sleep

bit 14 **ACTIVE:** UART Running Status bit
1 = UART clock request is active (user can not update the UxMODE/UxMODEH registers)
0 = UART clock request is not active (user can update the UxMODE/UxMODEH registers)

bit 13-12 **Unimplemented:** Read as ‘0’

bit 11 **BCLKMOD:** Baud Clock Generation Mode Select bit
1 = Uses fractional Baud Rate Generation
0 = Uses legacy divide-by-x counter for baud clock generation (x = 4 or 16 depending on the BRGH bit)

bit 10-9 **BCLKSEL<1:0>:** Baud Clock Source Selection bits
11 = Reserved
10 = FOSC
01 = Reserved
00 = FOSC/2 (FP)

bit 8 **HALFDPLX:** UART Half-Duplex Selection Mode bit
1 = Half-Duplex mode: UxTX is driven as an output when transmitting and tri-stated when TX is Idle
0 = Full-Duplex mode: UxTX is driven as an output at all times when both UARTEN and UTXEN are set

bit 7 **RUNOVF:** Run During Overflow Condition Mode bit
1 = When an Overflow Error (OERR) condition is detected, the RX shifter continues to run so as to remain synchronized with incoming RX data; data is not transferred to UxRXREG when it is full (i.e., no UxRXREG data is overwritten)
0 = When an Overflow Error (OERR) condition is detected, the RX shifter stops accepting new data (Legacy mode)

bit 6 **URXINV:** UART Receive Polarity bit
1 = Inverts RX polarity; Idle state is low
0 = Input is not inverted; Idle state is high

bit 5-4 **STSEL<1:0>:** Number of Stop Bits Selection bits
11 = 2 Stop bits sent, 1 checked at receive
10 = 2 Stop bits sent, 2 checked at receive
01 = 1.5 Stop bits sent, 1.5 checked at receive
00 = 1 Stop bit sent, 1 checked at receive

bit 3 **C0EN:** Enable Legacy Checksum (C0) Transmit and Receive bit
1 = Checksum Mode 1 (enhanced LIN checksum in LIN mode; add all TX/RX words in all other modes)
0 = Checksum Mode 0 (legacy LIN checksum in LIN mode; not used in all other modes)

© 2017-2018 Microchip Technology Inc.

REGISTER 13-2: UxMODEH: UARTx CONFIGURATION REGISTER HIGH (CONTINUED)

bit 2 **UTXINV:** UART Transmit Polarity bit
`1` = Inverts TX polarity; TX is low in Idle state
`0` = Output data is not inverted; TX output is high in Idle state

bit 1-0 **FLO<1:0>:** Flow Control Enable bits (only valid when MOD<3:0> = `0xxx`)
`11` = Reserved
`10` = $\overline{\text{RTS}}$-$\overline{\text{DSR}}$ (for TX side)/$\overline{\text{CTS}}$-DTR (for RX side) hardware flow control
`01` = XON/XOFF software flow control
`00` = Flow control off

REGISTER 13-3: UxSTA: UARTx STATUS REGISTER

R/W-0	R/W-0	R/W-0	R/W-0	R/W-0	R/W-0	R/W-0	R/W-0
TXMTIE	PERIE	ABDOVE	CERIE	FERIE	RXBKIE	OERIE	TXCIE
bit 15							bit 8

R-1	R-0	HS/R/W-0	HC/R/W-0	R-0	HC/R/W-0	HC/R/W-0	HC/R/W-0
TRMT	PERR	ABDOVF	CERIF	FERR	RXBKIF	OERR	TXCIF
bit 7							bit 0

Legend:	HS = Hardware Settable bit	HC = Hardware Clearable bit	
R = Readable bit	W = Writable bit	U = Unimplemented bit, read as ‘0’	
-n = Value at POR	‘1’ = Bit is set	‘0’ = Bit is cleared	x = Bit is unknown

bit 15 **TXMTIE:** Transmit Shifter Empty Interrupt Enable bit
1 = Interrupt is enabled
0 = Interrupt is disabled

bit 14 **PERIE:** Parity Error Interrupt Enable bit
1 = Interrupt is enabled
0 = Interrupt is disabled

bit 13 **ABDOVE:** Auto-Baud Rate Acquisition Interrupt Enable bit
1 = Interrupt is enabled
0 = Interrupt is disabled

bit 12 **CERIE:** Checksum Error Interrupt Enable bit
1 = Interrupt is enabled
0 = Interrupt is disabled

bit 11 **FERIE:** Framing Error Interrupt Enable bit
1 = Interrupt is enabled
0 = Interrupt is disabled

bit 10 **RXBKIE:** Receive Break Interrupt Enable bit
1 = Interrupt is enabled
0 = Interrupt is disabled

bit 9 **OERIE:** Receive Buffer Overflow Interrupt Enable bit
1 = Interrupt is enabled
0 = Interrupt is disabled

bit 8 **TXCIE:** Transmit Collision Interrupt Enable bit
1 = Interrupt is enabled
0 = Interrupt is disabled

bit 7 **TRMT:** Transmit Shifter Empty Interrupt Flag bit (read-only)
1 = Transmit Shift Register (TSR) is empty (end of last Stop bit when STPMD = 1 or middle of first Stop bit when STPMD = 0)
0 = Transmit Shift Register is not empty

bit 6 **PERR:** Parity Error/Address Received/Forward Frame Interrupt Flag bit
LIN and Parity Modes:
1 = Parity error detected
0 = No parity error detected
Address Mode:
1 = Address received
0 = No address detected
All Other Modes:
Not used.

© 2017-2018 Microchip Technology Inc.

REGISTER 13-3: UxSTA: UARTx STATUS REGISTER (CONTINUED)

bit 5 **ABDOVF:** Auto-Baud Rate Acquisition Interrupt Flag bit (must be cleared by software)
1 = BRG rolled over during the auto-baud rate acquisition sequence (must be cleared in software)
0 = BRG has not rolled over during the auto-baud rate acquisition sequence

bit 4 **CERIF:** Checksum Error Interrupt Flag bit (must be cleared by software)
1 = Checksum error
0 = No checksum error

bit 3 **FERR:** Framing Error Interrupt Flag bit
1 = Framing Error: Inverted level of the Stop bit corresponding to the topmost character in the buffer; propagates through the buffer with the received character
0 = No framing error

bit 2 **RXBKIF:** Receive Break Interrupt Flag bit (must be cleared by software)
1 = A Break was received
0 = No Break was detected

bit 1 **OERR:** Receive Buffer Overflow Interrupt Flag bit (must be cleared by software)
1 = Receive buffer has overflowed
0 = Receive buffer has not overflowed

bit 0 **TXCIF:** Transmit Collision Interrupt Flag bit (must be cleared by software)
1 = Transmitted word is not equal to the received word
0 = Transmitted word is equal to the received word

REGISTER 13-4: UxSTAH: UARTx STATUS REGISTER HIGH

U-0	R/W-0	R/W-0	R/W-0	U-0	R/W-0	R/W-0	R/W-0
—	UTXISEL2	UTXISEL1	UTXISEL0	—	URXISEL2(1)	URXISEL1(1)	URXISEL0(1)
bit 15							bit 8

HS/R/W-0	R/W-0	R/S-1	R-0	R-1	R-1	R/S-1	R-0
TXWRE	STPMD	UTXBE	UTXBF	RIDLE	XON	URXBE	URXBF
bit 7							bit 0

Legend:	HS = Hardware Settable bit	S = Settable bit	
R = Readable bit	W = Writable bit	U = Unimplemented bit, read as ‘0’	
-n = Value at POR	‘1’ = Bit is set	‘0’ = Bit is cleared	x = Bit is unknown

bit 15 **Unimplemented:** Read as ‘0’

bit 14-12 **UTXISEL<2:0>:** UART Transmit Interrupt Select bits
111 = Sets transmit interrupt when there is one empty slot left in the buffer
...
010 = Sets transmit interrupt when there are six empty slots or more in the buffer
001 = Sets transmit interrupt when there are seven empty slots or more in the buffer
000 = Sets transmit interrupt when there are eight empty slots in the buffer; TX buffer is empty

bit 11 **Unimplemented:** Read as ‘0’

bit 10-8 **URXISEL<2:0>:** UART Receive Interrupt Select bits(1)
111 = Triggers receive interrupt when there are eight words in the buffer; RX buffer is full
...
001 = Triggers receive interrupt when there are two words or more in the buffer
000 = Triggers receive interrupt when there is one word or more in the buffer

bit 7 **TXWRE:** TX Write Transmit Error Status bit
LIN and Parity Modes:
1 = A new byte was written when the buffer was full or when P2<8:0> = 0 (must be cleared by software)
0 = No error
Address Detect Mode:
1 = A new byte was written when the buffer was full or to P1<8:0> when P1x was full (must be cleared by software)
0 = No error
Other Modes:
1 = A new byte was written when the buffer was full (must be cleared by software)
0 = No error

bit 6 **STPMD:** Stop Bit Detection Mode bit
1 = Triggers RXIF at the end of the last Stop bit
0 = Triggers RXIF in the middle of the first (or second, depending on the STSEL<1:0> setting) Stop bit

bit 5 **UTXBE:** UART TX Buffer Empty Status bit
1 = Transmit buffer is empty; writing ‘1’ when UTXEN = 0 will reset the TX FIFO Pointers and counters
0 = Transmit buffer is not empty

bit 4 **UTXBF:** UART TX Buffer Full Status bit
1 = Transmit buffer is full
0 = Transmit buffer is not full

bit 3 **RIDLE:** Receive Idle bit
1 = UART RX line is in the Idle state
0 = UART RX line is receiving something

Note 1: The receive watermark interrupt is not set if PERIF or FERIF is set and the corresponding IE bit is set.

© 2017-2018 Microchip Technology Inc.

REGISTER 13-4: UxSTAH: UARTx STATUS REGISTER HIGH (CONTINUED)

bit 2 **XON:** UART in XON Mode bit
Only valid when FLO<1:0> control bits are set to XON/XOFF mode.
1 = UART has received XON
0 = UART has not received XON or XOFF was received

bit 1 **URXBE:** UART RX Buffer Empty Status bit
1 = Receive buffer is empty; writing '1' when URXEN = 0 will reset the RX FIFO Pointers and counters
0 = Receive buffer is not empty

bit 0 **URXBF:** UART RX Buffer Full Status bit
1 = Receive buffer is full
0 = Receive buffer is not full

Note 1: The receive watermark interrupt is not set if PERIF or FERIF is set and the corresponding IE bit is set.

REGISTER 13-5: UxBRG: UARTx BAUD RATE REGISTER

R/W-0	R/W-0	R/W-0	R/W-0	R/W-0	R/W-0	R/W-0	R/W-0
BRG<15:8>							
bit 15							bit 8

R/W-0	R/W-0	R/W-0	R/W-0	R/W-0	R/W-0	R/W-0	R/W-0
BRG<7:0>							
bit 7							bit 0

Legend:			
R = Readable bit	W = Writable bit	U = Unimplemented bit, read as ‘0’	
-n = Value at POR	‘1’ = Bit is set	‘0’ = Bit is cleared	x = Bit is unknown

bit 15 **BRG<15:0>:** Baud Rate Divisor bits

REGISTER 13-6: UxBRGH: UARTx BAUD RATE REGISTER HIGH

U-0	U-0	U-0	U-0	U-0	U-0	U-0	U-0
—	—	—	—	—	—	—	—
bit 15							bit 8

U-0	U-0	U-0	U-0	R/W-0	R/W-0	R/W-0	R/W-0
—	—	—	—	BRG<19:16>			
bit 7							bit 0

Legend:			
R = Readable bit	W = Writable bit	U = Unimplemented bit, read as ‘0’	
-n = Value at POR	‘1’ = Bit is set	‘0’ = Bit is cleared	x = Bit is unknown

bit 15-4 **Unimplemented:** Read as ‘0’

bit 3-0 **BRG<19:16>:** Baud Rate Divisor bits

© 2017-2018 Microchip Technology Inc.

REGISTER 13-7: UxRXREG: UARTx RECEIVE BUFFER REGISTER

U-0	U-0	U-0	U-0	U-0	U-0	U-0	U-0
—	—	—	—	—	—	—	—
bit 15							bit 8

R-x	R-x	R-x	R-x	R-x	R-x	R-x	R-x
RXREG<7:0>							
bit 7							bit 0

Legend:			
R = Readable bit	W = Writable bit	U = Unimplemented bit, read as ‘0’	
-n = Value at POR	‘1’ = Bit is set	‘0’ = Bit is cleared	x = Bit is unknown

bit 15-8 **Unimplemented:** Read as ‘0’

bit 7-0 **RXREG<7:0>:** Received Character Data bits 7-0

REGISTER 13-8: UxTXREG: UARTx TRANSMIT BUFFER REGISTER

W-x	U-0	U-0	U-0	U-0	U-0	U-0	U-0
LAST	—	—	—	—	—	—	—
bit 15							bit 8

W-x	W-x	W-x	W-x	W-x	W-x	W-x	W-x
TXREG<7:0>							
bit 7							bit 0

Legend:			
R = Readable bit	W = Writable bit	U = Unimplemented bit, read as ‘0’	
-n = Value at POR	‘1’ = Bit is set	‘0’ = Bit is cleared	x = Bit is unknown

bit 15 **LAST:** Last Byte Indicator for Smart Card Support bit

bit 14-8 **Unimplemented:** Read as ‘0’

bit 7-0 **TXREG<7:0>:** Transmitted Character Data bits 7-0
If the buffer is full, further writes to the buffer are ignored.

REGISTER 13-9: UxP1: UARTx TIMING PARAMETER 1 REGISTER

U-0	U-0	U-0	U-0	U-0	U-0	U-0	R/W-0
—	—	—	—	—	—	—	P1<8>
bit 15							bit 8

R/W-0	R/W-0	R/W-0	R/W-0	R/W-0	R/W-0	R/W-0	R/W-0
P1<7:0>							
bit 7							bit 0

Legend:			
R = Readable bit	W = Writable bit	U = Unimplemented bit, read as ‘0’	
-n = Value at POR	‘1’ = Bit is set	‘0’ = Bit is cleared	x = Bit is unknown

bit 15-9 **Unimplemented:** Read as ‘0’

bit 8-0 **P1<8:0>:** Parameter 1 bits

DMX TX:
Number of Bytes to Transmit – 1 (not including Start code).

LIN Master TX:
PID to transmit (bits<5:0>).

Asynchronous TX with Address Detect:
Address to transmit. A ‘1’ is automatically inserted into bit 9 (bits<7:0>).

Smart Card Mode:
Guard Time Counter bits. This counter is operated on the bit clock whose period is always equal to one ETU (bits<8:0>).

Other Modes:
Not used.

© 2017-2018 Microchip Technology Inc.

REGISTER 13-10: UxP2: UARTx TIMING PARAMETER 2 REGISTER

U-0	U-0	U-0	U-0	U-0	U-0	U-0	R/W-0
—	—	—	—	—	—	—	P2<8>
bit 15							bit 8

R/W-0	R/W-0	R/W-0	R/W-0	R/W-0	R/W-0	R/W-0	R/W-0
P2<7:0>							
bit 7							bit 0

Legend:			
R = Readable bit	W = Writable bit	U = Unimplemented bit, read as ‘0’	
-n = Value at POR	‘1’ = Bit is set	‘0’ = Bit is cleared	x = Bit is unknown

bit 15-9 **Unimplemented:** Read as ‘0’

bit 8-0 **P2<8:0>:** Parameter 2 bits

DMX RX:
The first byte number to receive – 1, not including Start code (bits<8:0>).

LIN Slave TX:
Number of bytes to transmit (bits<7:0>).

Asynchronous RX with Address Detect:
Address to start matching (bits<7:0>).

Smart Card Mode:
Block Time Counter bits. This counter is operated on the bit clock whose period is always equal to one ETU (bits<8:0>).

Other Modes:
Not used.

REGISTER 13-11: UxP3: UARTx TIMING PARAMETER 3 REGISTER

R/W-0	R/W-0	R/W-0	R/W-0	R/W-0	R/W-0	R/W-0	R/W-0
P3<15:8>							
bit 15							bit 8

R/W-0	R/W-0	R/W-0	R/W-0	R/W-0	R/W-0	R/W-0	R/W-0
P3<7:0>							
bit 7							bit 0

Legend:			
R = Readable bit	W = Writable bit	U = Unimplemented bit, read as ‘0’	
-n = Value at POR	‘1’ = Bit is set	‘0’ = Bit is cleared	x = Bit is unknown

bit 15-0 **P3<15:0>:** Parameter 3 bits

DMX RX:
The last byte number to receive – 1, not including Start code (bits<8:0>).

LIN Slave RX:
Number of bytes to receive (bits<7:0>).

Asynchronous RX:
Used to mask the UxP2 address bits; `1` = P2 address bit is used, `0` = P2 address bit is masked off (bits<7:0>).

Smart Card Mode:
Waiting Time Counter bits (bits<15:0>).

Other Modes:
Not used.

REGISTER 13-12: UxP3H: UARTx TIMING PARAMETER 3 REGISTER HIGH

U-0	U-0	U-0	U-0	U-0	U-0	U-0	U-0
—	—	—	—	—	—	—	—
bit 15							bit 8

R/W-0	R/W-0	R/W-0	R/W-0	R/W-0	R/W-0	R/W-0	R/W-0
P3<23:16>							
bit 7							bit 0

Legend:			
R = Readable bit	W = Writable bit	U = Unimplemented bit, read as ‘0’	
-n = Value at POR	‘1’ = Bit is set	‘0’ = Bit is cleared	x = Bit is unknown

bit 15-8 **Unimplemented:** Read as ‘`0`’

bit 7-0 **P3<23:16>:** Parameter 3 High bits

Smart Card Mode:
Waiting Time Counter bits (bits<23:16>).

Other Modes:
Not used.

© 2017-2018 Microchip Technology Inc.

REGISTER 13-13: UxTXCHK: UARTx TRANSMIT CHECKSUM REGISTER

U-0	U-0	U-0	U-0	U-0	U-0	U-0	U-0
—	—	—	—	—	—	—	—
bit 15							bit 8

R/W-0	R/W-0	R/W-0	R/W-0	R/W-0	R/W-0	R/W-0	R/W-0
TXCHK<7:0>							
bit 7							bit 0

Legend:			
R = Readable bit	W = Writable bit	U = Unimplemented bit, read as ‘0’	
-n = Value at POR	‘1’ = Bit is set	‘0’ = Bit is cleared	x = Bit is unknown

bit 15-8 **Unimplemented:** Read as ‘0’

bit 7-0 **TXCHK<7:0>:** Transmit Checksum bits (calculated from TX words)

LIN Modes:
C0EN = 1: Sum of all transmitted data + addition carries, including PID.
C0EN = 0: Sum of all transmitted data + addition carries, excluding PID.

LIN Slave:
Cleared when Break is detected.

LIN Master/Slave:
Cleared when Break is detected.

Other Modes:
C0EN = 1: Sum of every byte transmitted + addition carries.
C0EN = 0: Value remains unchanged.

REGISTER 13-14: UxRXCHK: UARTx RECEIVE CHECKSUM REGISTER

U-0	U-0	U-0	U-0	U-0	U-0	U-0	U-0
—	—	—	—	—	—	—	—
bit 15							bit 8

R/W-0	R/W-0	R/W-0	R/W-0	R/W-0	R/W-0	R/W-0	R/W-0
RXCHK<7:0>							
bit 7							bit 0

Legend:			
R = Readable bit	W = Writable bit	U = Unimplemented bit, read as ‘0’	
-n = Value at POR	‘1’ = Bit is set	‘0’ = Bit is cleared	x = Bit is unknown

bit 15-8 **Unimplemented:** Read as ‘0’

bit 7-0 **RXCHK<7:0>:** Receive Checksum bits (calculated from RX words)

LIN Modes:
C0EN = 1: Sum of all received data + addition carries, including PID.
C0EN = 0: Sum of all received data + addition carries, excluding PID.

LIN Slave:
Cleared when Break is detected.

LIN Master/Slave:
Cleared when Break is detected.

Other Modes:
C0EN = 1: Sum of every byte received + addition carries.
C0EN = 0: Value remains unchanged.

© 2017-2018 Microchip Technology Inc.

REGISTER 13-15: UxSCCON: UARTx SMART CARD CONFIGURATION REGISTER

U-0	U-0	U-0	U-0	U-0	U-0	U-0	U-0
—	—	—	—	—	—	—	—
bit 15							bit 8

U-0	U-0	R/W-0	R/W-0	R/W-0	R/W-0	R/W-0	U-0
—	—	TXRPT1	TXRPT0	CONV	T0PD	PRTCL	—
bit 7							bit 0

Legend:			
R = Readable bit	W = Writable bit	U = Unimplemented bit, read as ‘0’	
-n = Value at POR	‘1’ = Bit is set	‘0’ = Bit is cleared	x = Bit is unknown

bit 15-6 **Unimplemented:** Read as ‘0’

bit 5-4 **TXRPT<1:0>:** Transmit Repeat Selection bits
11 = Retransmit the error byte four times
10 = Retransmit the error byte three times
01 = Retransmit the error byte twice
00 = Retransmit the error byte once

bit 3 **CONV:** Logic Convention Selection bit
1 = Inverse logic convention
0 = Direct logic convention

bit 2 **T0PD:** Pull-Down Duration for T = 0 Error Handling bit
1 = 2 ETU
0 = 1 ETU

bit 1 **PRTCL:** Smart Card Protocol Selection bit
1 = T = 1
0 = T = 0

bit 0 **Unimplemented:** Read as ‘0’

REGISTER 13-16: UxSCINT: UARTx SMART CARD INTERRUPT REGISTER

U-0	U-0	HS/R/W-0	HS/R/W-0	U-0	HS/R/W-0	HS/R/W-0	HS/R/W-0
—	—	RXRPTIF	TXRPTIF	—	BTCIF	WTCIF	GTCIF
bit 15							bit 8

U-0	U-0	R/W-0	R/W-0	U-0	R/W-0	R/W-0	R/W-0
—	—	RXRPTIE	TXRPTIE	—	BTCIE	WTCIE	GTCIE
bit 7							bit 0

Legend:	HS = Hardware Settable bit		
R = Readable bit	W = Writable bit	U = Unimplemented bit, read as ‘0’	
-n = Value at POR	‘1’ = Bit is set	‘0’ = Bit is cleared	x = Bit is unknown

bit 15-14 **Unimplemented:** Read as ‘0’

bit 13 **RXRPTIF:** Receive Repeat Interrupt Flag bit
1 = Parity error has persisted after the same character has been received five times (four retransmits)
0 = Flag is cleared

bit 12 **TXRPTIF:** Transmit Repeat Interrupt Flag bit
1 = Line error has been detected after the last retransmit per TXRPT<1:0>
0 = Flag is cleared

bit 11 **Unimplemented:** Read as ‘0’

bit 10 **BTCIF:** Block Time Counter Interrupt Flag bit
1 = Block Time Counter has reached 0
0 = Block Time Counter has not reached 0

bit 9 **WTCIF:** Waiting Time Counter Interrupt Flag bit
1 = Waiting Time Counter has reached 0
0 = Waiting Time Counter has not reached 0

bit 8 **GTCIF:** Guard Time Counter Interrupt Flag bit
1 = Guard Time Counter has reached 0
0 = Guard Time Counter has not reached 0

bit 7-6 **Unimplemented:** Read as ‘0’

bit 5 **RXRPTIE:** Receive Repeat Interrupt Enable bit
1 = An interrupt is invoked when a parity error has persisted after the same character has been received five times (four retransmits)
0 = Interrupt is disabled

bit 4 **TXRPTIE:** Transmit Repeat Interrupt Enable bit
1 = An interrupt is invoked when a line error is detected after the last retransmit per TXRPT<1:0> has been completed
0 = Interrupt is disabled

bit 3 **Unimplemented:** Read as ‘0’

bit 2 **BTCIE:** Block Time Counter Interrupt Enable bit
1 = Block Time Counter interrupt is enabled
0 = Block Time Counter interrupt is disabled

bit 1 **WTCIE:** Waiting Time Counter Interrupt Enable bit
1 = Waiting Time Counter interrupt is enabled
0 = Waiting Time Counter Interrupt is disabled

bit 0 **GTCIE:** Guard Time Counter interrupt enable bit
1 = Guard Time Counter interrupt is enabled
0 = Guard Time Counter interrupt is disabled

© 2017-2018 Microchip Technology Inc.

REGISTER 13-17: UxINT: UARTx INTERRUPT REGISTER

U-0	U-0	U-0	U-0	U-0	U-0	U-0	U-0
—	—	—	—	—	—	—	—
bit 15							bit 8

HS/R/W-0	HS/R/W-0	U-0	U-0	U-0	R/W-0	U-0	U-0
WUIF	ABDIF	—	—	—	ABDIE	—	—
bit 7							bit 0

Legend:	HS = Hardware Settable bit		
R = Readable bit	W = Writable bit	U = Unimplemented bit, read as ‘0’	
-n = Value at POR	‘1’ = Bit is set	‘0’ = Bit is cleared	x = Bit is unknown

bit 15-8 **Unimplemented:** Read as ‘0’

bit 7 **WUIF:** Wake-up Interrupt Flag bit
- 1 = Sets when WAKE = 1 and RX makes a ‘1’-to-‘0’ transition; triggers event interrupt (must be cleared by software)
- 0 = WAKE is not enabled or WAKE is enabled, but no wake-up event has occurred

bit 6 **ABDIF:** Auto-Baud Completed Interrupt Flag bit
- 1 = Sets when ABD sequence makes the final ‘1’-to-‘0’ transition; triggers event interrupt (must be cleared by software)
- 0 = ABAUD is not enabled or ABAUD is enabled but auto-baud has not completed

bit 5-3 **Unimplemented:** Read as ‘0’

bit 2 **ABDIE:** Auto-Baud Completed Interrupt Enable Flag bit
- 1 = Allows ABDIF to set an event interrupt
- 0 = ABDIF does not set an event interrupt

bit 1-0 **Unimplemented:** Read as ‘0’

NOTES:

© 2017-2018 Microchip Technology Inc.

14.0 SERIAL PERIPHERAL INTERFACE (SPI)

Note 1: This data sheet summarizes the features of the dsPIC33CH128MP508 family of devices. It is not intended to be a comprehensive reference source. To complement the information in this data sheet, refer to **"Serial Peripheral Interface (SPI) with Audio Codec Support"** (DS70005136) in the *"dsPIC33/PIC24 Family Reference Manual"*, which is available from the Microchip web site (www.microchip.com).

2: The SPI is Identical for both Master core and Slave core. The x is common for both Master and Slave (where the x represents the number of the specific module being addressed). The number of SPI modules available on the Master and Slave is different and they are located in different SFR locations.

3: All associated register names are the same on the Master core and the Slave core. The Slave code will be developed in a separate project in MPLAB® X IDE with the device selection, dsPIC33CH128MP508**S1**, where the **S1** indicates the Slave device. The Master is SPI1 and SPI2, and the Slave is SPI1.

Table 14-1 shows an overview of the SPI module.

TABLE 14-1: SPI MODULE OVERVIEW

	Number of SPI Modules	Identical (Modules)
Master Core	2	Yes
Slave Core	1	Yes

The Serial Peripheral Interface (SPI) module is a synchronous serial interface, useful for communicating with other peripheral or microcontroller devices. These peripheral devices may be serial EEPROMs, shift registers, display drivers, A/D Converters, etc. The SPI module is compatible with the Motorola® SPI and SIOP interfaces. All devices in the dsPIC33CH128MP508 family include three SPI modules; two SPIs for the Master core and one for the Slave core. One of the SPI modules can work up to 50 MHz speed when selected as a non-PPS pin. For the Master core, it will be SPI2 and for the Slave core, it will be SPI1. The selection is done using the SPI2PIN bit (FDEVOPT<13>) for the Master and the S1SPI1PIN bit (FS1DEVOPT<13>) for the Slave. If the bit for SPI2PIN/S1SPI1PIN is '1', the PPS pin will be used. If the SPI2PIN/S1SPI1PIN is '0', it will use the dedicated SPI pads.

The module supports operation in two Buffer modes. In Standard mode, data is shifted through a single serial buffer. In Enhanced Buffer mode, data is shifted through a FIFO buffer. The FIFO level depends on the configured mode.

Note: FIFO depth for this device is four (in 8-Bit Data mode).

Variable length data can be transmitted and received, from 2 to 32 bits.

Note: Do not perform Read-Modify-Write operations (such as bit-oriented instructions) on the SPIxBUF register in either Standard or Enhanced Buffer mode.

The module also supports a basic framed SPI protocol while operating in either Master or Slave mode. A total of four framed SPI configurations are supported.

The module also supports Audio modes. Four different Audio modes are available.

- I^2S mode
- Left Justified mode
- Right Justified mode
- PCM/DSP mode

In each of these modes, the serial clock is free-running and audio data is always transferred.

If an audio protocol data transfer takes place between two devices, then usually one device is the Master and the other is the Slave. However, audio data can be transferred between two Slaves. Because the audio protocols require free-running clocks, the Master can be a third-party controller. In either case, the Master generates two free-running clocks: SCKx and LRC (Left, Right Channel Clock/$\overline{\text{SSx}}$/FSYNC).

The SPI serial interface consists of four pins:

- SDIx/S1SDIx: Serial Data Input
- SDOx/S1SDOx: Serial Data Output
- SCKx/S1SCKx: Shift Clock Input or Output
- $\overline{\text{SSx}}$/$\overline{\text{S1SSx}}$: Active-Low Slave Select or Frame Synchronization I/O Pulse

The SPI module can be configured to operate using two, three or four pins. In the 3-pin mode, $\overline{\text{SSx}}$/$\overline{\text{S1SSx}}$ is not used. In the 2-pin mode, both SDOx/S1SDOx and $\overline{\text{SSx}}$/$\overline{\text{S1SSx}}$ are not used.

The SPI module has the ability to generate three interrupts reflecting the events that occur during the data communication. The following types of interrupts can be generated:

1. Receive interrupts are signalled by SPIxRXIF. This event occurs when:
   - RX watermark interrupt
   - SPIROV = 1
   - SPIRBF = 1
   - SPIRBE = 1

   provided the respective mask bits are enabled in SPIxIMSKL/H.
2. Transmit interrupts are signalled by SPIxTXIF. This event occurs when:
   - TX watermark interrupt
   - SPITUR = 1
   - SPITBF = 1
   - SPITBE = 1

   provided the respective mask bits are enabled in SPIxIMSKL/H.
3. General interrupts are signalled by SPIxGIF. This event occurs when:
   - FRMERR = 1
   - SPIBUSY = 1
   - SRMT = 1

   provided the respective mask bits are enabled in SPIxIMSKL/H.

Block diagrams of the module in Standard and Enhanced modes are shown in Figure 14-1 and Figure 14-2.

Note:	In this section, the SPI modules are referred to together as SPIx, or separately as SPI1, SPI2 or SPI3. Special Function Registers will follow a similar notation. For example, SPIxCON1 and SPIxCON2 refer to the control registers for any of the three SPI modules.

To set up the SPIx module for the Standard Master mode of operation:

1. If using interrupts:
   a) Clear the interrupt flag bits in the respective IFSx register.
   b) Set the interrupt enable bits in the respective IECx register.
   c) Write the SPIxIP bits in the respective IPCx register to set the interrupt priority.
2. Write the desired settings to the SPIxCON1L and SPIxCON1H registers with the MSTEN bit (SPIxCON1L<5>) = 1.
3. Clear the SPIROV bit (SPIxSTATL<6>).
4. Enable SPIx operation by setting the SPIEN bit (SPIxCON1L<15>).
5. Write the data to be transmitted to the SPIxBUFL and SPIxBUFH registers. Transmission (and reception) will start as soon as data is written to the SPIxBUFL and SPIxBUFH registers.

To set up the SPIx module for the Standard Slave mode of operation:

1. Clear the SPIxBUF registers.
2. If using interrupts:
   a) Clear the SPIxBUFL and SPIxBUFH registers.
   b) Set the interrupt enable bits in the respective IECx register.
   c) Write the SPIxIP bits in the respective IPCx register to set the interrupt priority.
3. Write the desired settings to the SPIxCON1L, SPIxCON1H and SPIxCON2L registers with the MSTEN bit (SPIxCON1L<5>) = 0.
4. Clear the SMP bit.
5. If the CKE bit (SPIxCON1L<8>) is set, then the SSEN bit (SPIxCON1L<7>) must be set to enable the $\overline{SSx}$ pin.
6. Clear the SPIROV bit (SPIxSTATL<6>).
7. Enable SPIx operation by setting the SPIEN bit (SPIxCON1L<15>).

© 2017-2018 Microchip Technology Inc.

FIGURE 14-1: SPIx MODULE BLOCK DIAGRAM (STANDARD MODE)

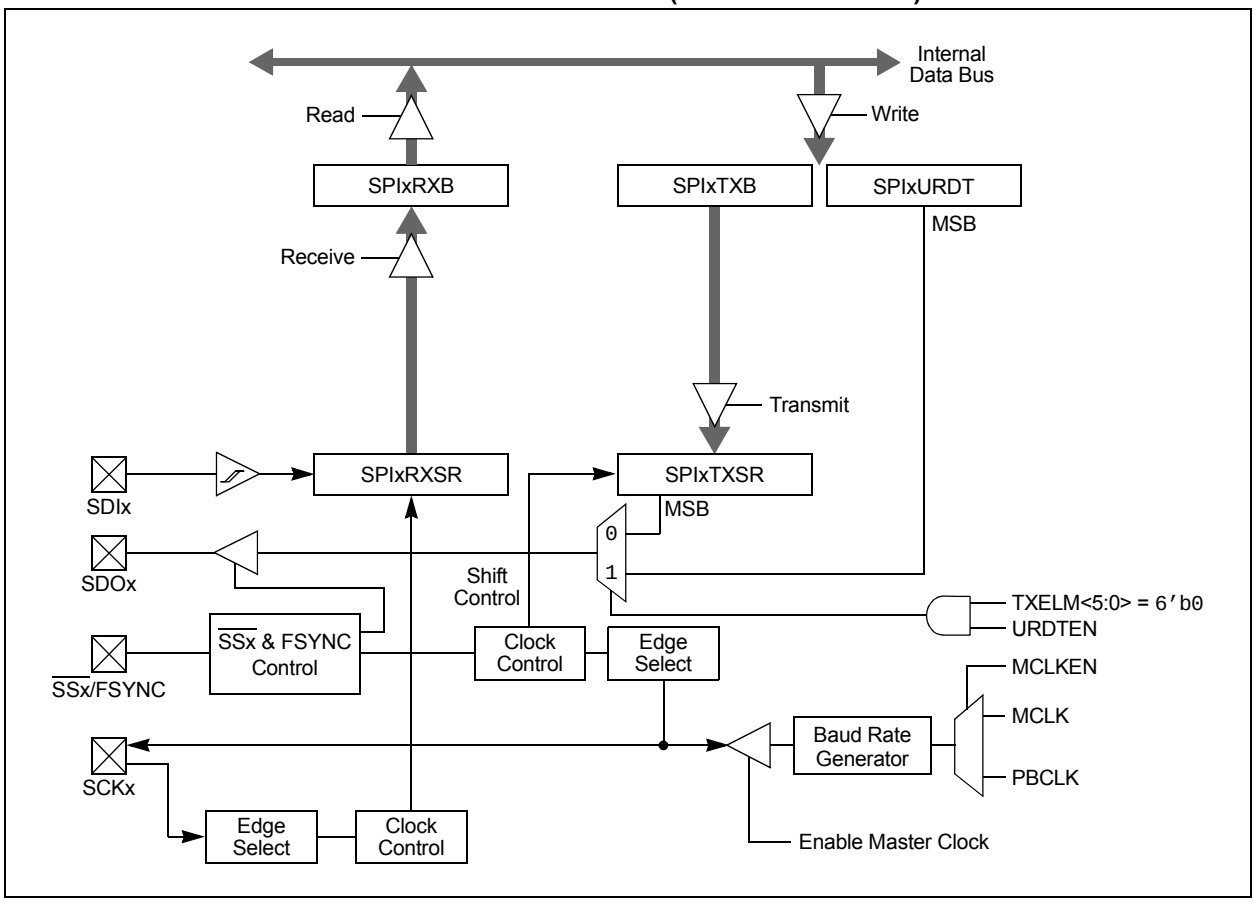

To set up the SPIx module for the Enhanced Buffer Master mode of operation:

1. If using interrupts:
   a) Clear the interrupt flag bits in the respective IFSx register.
   b) Set the interrupt enable bits in the respective IECx register.
   c) Write the SPIxIP bits in the respective IPCx register.
2. Write the desired settings to the SPIxCON1L, SPIxCON1H and SPIxCON2L registers with MSTEN (SPIxCON1L<5>) = 1.
3. Clear the SPIROV bit (SPIxSTATL<6>).
4. Select Enhanced Buffer mode by setting the ENHBUF bit (SPIxCON1L<0>).
5. Enable SPIx operation by setting the SPIEN bit (SPIxCON1L<15>).
6. Write the data to be transmitted to the SPIxBUFL and SPIxBUFH registers. Transmission (and reception) will start as soon as data is written to the SPIxBUFL and SPIxBUFH registers.

To set up the SPIx module for the Enhanced Buffer Slave mode of operation:

1. Clear the SPIxBUFL and SPIxBUFH registers.
2. If using interrupts:
   a) Clear the interrupt flag bits in the respective IFSx register.
   b) Set the interrupt enable bits in the respective IECx register.
   c) Write the SPIxIP bits in the respective IPCx register to set the interrupt priority.
3. Write the desired settings to the SPIxCON1L, SPIxCON1H and SPIxCON2L registers with the MSTEN bit (SPIxCON1L<5>) = 0.
4. Clear the SMP bit.
5. If the CKE bit is set, then the SSEN bit must be set, thus enabling the $\overline{SS}$x pin.
6. Clear the SPIROV bit (SPIxSTATL<6>).
7. Select Enhanced Buffer mode by setting the ENHBUF bit (SPIxCON1L<0>).
8. Enable SPIx operation by setting the SPIEN bit (SPIxCON1L<15>).

FIGURE 14-2: SPIx MODULE BLOCK DIAGRAM (ENHANCED MODE)

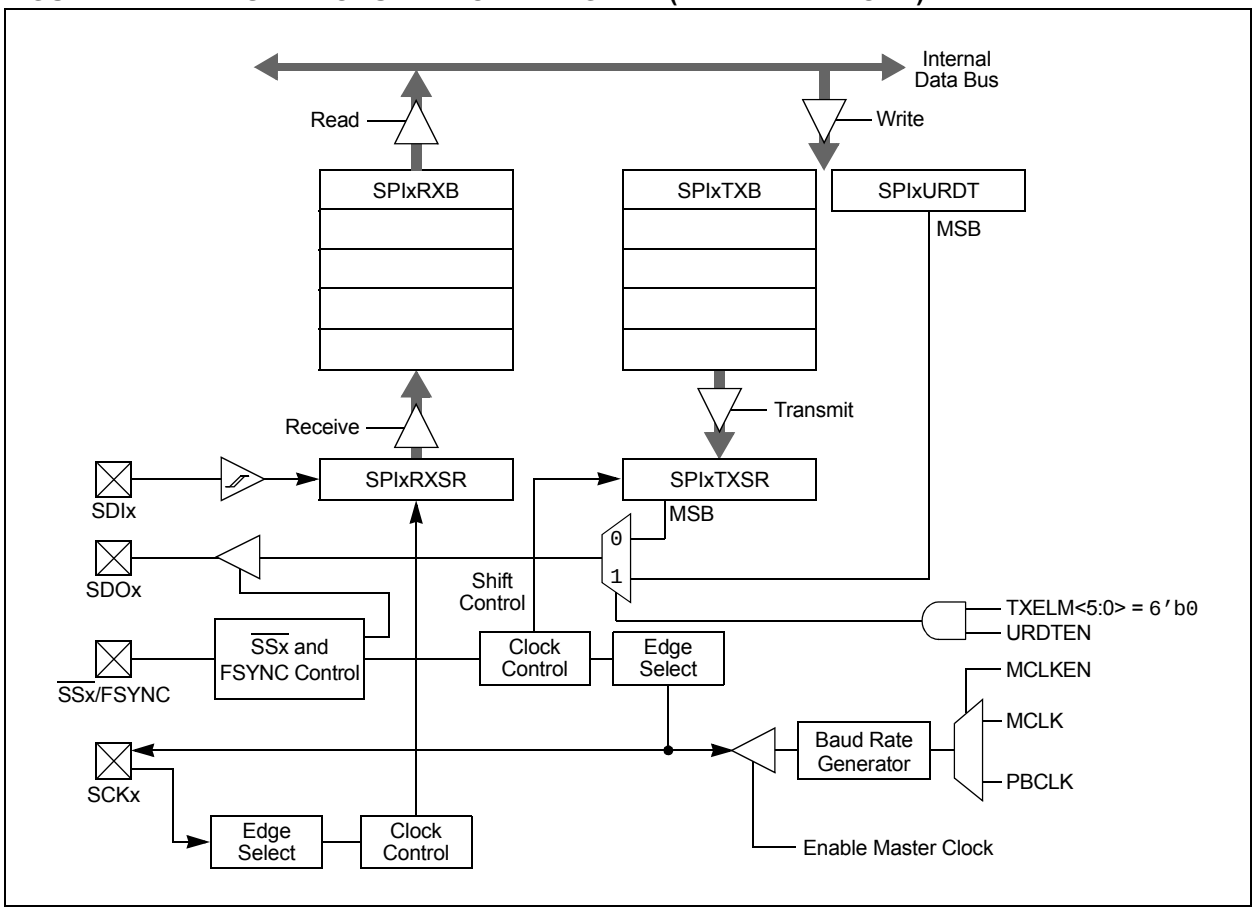

© 2017-2018 Microchip Technology Inc.

To set up the SPIx module for Audio mode:

1. Clear the SPIxBUFL and SPIxBUFH registers.
2. If using interrupts:
   a) Clear the interrupt flag bits in the respective IFSx register.
   b) Set the interrupt enable bits in the respective IECx register.
   a) Write the SPIxIP bits in the respective IPCx register to set the interrupt priority.
3. Write the desired settings to the SPIxCON1L, SPIxCON1H and SPIxCON2L registers with AUDEN (SPIxCON1H<15>) = 1.
4. Clear the SPIROV bit (SPIxSTATL<6>).
5. Enable SPIx operation by setting the SPIEN bit (SPIxCON1L<15>).
6. Write the data to be transmitted to the SPIxBUFL and SPIxBUFH registers. Transmission (and reception) will start as soon as data is written to the SPIxBUFL and SPIxBUFH registers.

14.1 SPI Control/Status Registers

REGISTER 14-1: SPIxCON1L: SPIx CONTROL REGISTER 1 LOW

R/W-0	U-0	R/W-0	R/W-0	R/W-0	R/W-0	R/W-0	R/W-0
SPIEN	—	SPISIDL	DISSDO	MODE32(1,4)	MODE16(1,4)	SMP	CKE(1)
bit 15							bit 8

R/W-0	R/W-0	R/W-0	R/W-0	R/W-0	R/W-0	R/W-0	R/W-0
SSEN(2)	CKP	MSTEN	DISSDI	DISSCK	MCLKEN(3)	SPIFE	ENHBUF
bit 7							bit 0

Legend:			
R = Readable bit	W = Writable bit	U = Unimplemented bit, read as ‘0’	
-n = Value at POR	‘1’ = Bit is set	‘0’ = Bit is cleared	x = Bit is unknown

bit 15 **SPIEN:** SPIx On bit
1 = Enables module
0 = Turns off and resets module, disables clocks, disables interrupt event generation, allows SFR modifications

bit 14 **Unimplemented:** Read as ‘0’

bit 13 **SPISIDL:** SPIx Stop in Idle Mode bit
1 = Halts in CPU Idle mode
0 = Continues to operate in CPU Idle mode

bit 12 **DISSDO:** Disable SDOx Output Port bit
1 = SDOx pin is not used by the module; pin is controlled by port function
0 = SDOx pin is controlled by the module

bit 11-10 **MODE32** and **MODE16:** Serial Word Length Select bits(1,4)

MODE32	MODE16	AUDEN	Communication
1	x	0	32-Bit
0	1		16-Bit
0	0		8-Bit
1	1	1	24-Bit Data, 32-Bit FIFO, 32-Bit Channel/64-Bit Frame
1	0		32-Bit Data, 32-Bit FIFO, 32-Bit Channel/64-Bit Frame
0	1		16-Bit Data, 16-Bit FIFO, 32-Bit Channel/64-Bit Frame
0	0		16-Bit FIFO, 16-Bit Channel/32-Bit Frame

bit 9 **SMP:** SPIx Data Input Sample Phase bit
Master Mode:
1 = Input data is sampled at the end of data output time
0 = Input data is sampled at the middle of data output time
Slave Mode:
Input data is always sampled at the middle of data output time, regardless of the SMP setting.

bit 8 **CKE:** SPIx Clock Edge Select bit(1)
1 = Transmit happens on transition from active clock state to Idle clock state
0 = Transmit happens on transition from Idle clock state to active clock state

Note 1: When AUDEN (SPIxCON1H<15>) = 1, this module functions as if CKE = 0, regardless of its actual value.
2: When FRMEN = 1, SSEN is not used.
3: MCLKEN can only be written when the SPIEN bit = 0.
4: This channel is not meaningful for DSP/PCM mode as LRC follows FRMSYPW.

© 2017-2018 Microchip Technology Inc.

REGISTER 14-1: SPIxCON1L: SPIx CONTROL REGISTER 1 LOW (CONTINUED)

bit 7 **SSEN:** Slave Select Enable bit (Slave mode)[2]
1 = $\overline{SSx}$ pin is used by the macro in Slave mode; $\overline{SSx}$ pin is used as the Slave select input
0 = $\overline{SSx}$ pin is not used by the macro ($\overline{SSx}$ pin will be controlled by the port I/O)

bit 6 **CKP:** Clock Polarity Select bit
1 = Idle state for clock is a high level; active state is a low level
0 = Idle state for clock is a low level; active state is a high level

bit 5 **MSTEN:** Master Mode Enable bit
1 = Master mode
0 = Slave mode

bit 4 **DISSDI:** Disable SDIx Input Port bit
1 = SDIx pin is not used by the module; pin is controlled by port function
0 = SDIx pin is controlled by the module

bit 3 **DISSCK:** Disable SCKx Output Port bit
1 = SCKx pin is not used by the module; pin is controlled by port function
0 = SCKx pin is controlled by the module

bit 2 **MCLKEN:** Master Clock Enable bit[3]
1 = MCLK is used by the BRG
0 = PBCLK is used by the BRG

bit 1 **SPIFE:** Frame Sync Pulse Edge Select bit
1 = Frame Sync pulse (Idle-to-active edge) coincides with the first bit clock
0 = Frame Sync pulse (Idle-to-active edge) precedes the first bit clock

bit 0 **ENHBUF:** Enhanced Buffer Enable bit
1 = Enhanced Buffer mode is enabled
0 = Enhanced Buffer mode is disabled

Note 1: When AUDEN (SPIxCON1H<15>) = 1, this module functions as if CKE = 0, regardless of its actual value.
2: When FRMEN = 1, SSEN is not used.
3: MCLKEN can only be written when the SPIEN bit = 0.
4: This channel is not meaningful for DSP/PCM mode as LRC follows FRMSYPW.

REGISTER 14-2: SPIxCON1H: SPIx CONTROL REGISTER 1 HIGH

R/W-0	R/W-0	R/W-0	R/W-0	R/W-0	R/W-0	R/W-0	R/W-0
AUDEN(1)	SPISGNEXT	IGNROV	IGNTUR	AUDMONO(2)	URDTEN(3)	AUDMOD1(4)	AUDMOD0(4)
bit 15							bit 8

R/W-0	R/W-0	R/W-0	R/W-0	R/W-0	R/W-0	R/W-0	R/W-0
FRMEN	FRMSYNC	FRMPOL	MSSEN	FRMSYPW	FRMCNT2	FRMCNT1	FRMCNT0
bit 7							bit 0

Legend:			
R = Readable bit	W = Writable bit	U = Unimplemented bit, read as ‘0’	
-n = Value at POR	‘1’ = Bit is set	‘0’ = Bit is cleared	x = Bit is unknown

bit 15 **AUDEN:** Audio Codec Support Enable bit(1)
- 1 = Audio protocol is enabled; MSTEN controls the direction of both SCKx and frame (a.k.a. LRC), and this module functions as if FRMEN = 1, FRMSYNC = MSTEN, FRMCNT<2:0> = 001 and SMP = 0, regardless of their actual values
- 0 = Audio protocol is disabled

bit 14 **SPISGNEXT:** SPIx Sign-Extend RX FIFO Read Data Enable bit
- 1 = Data from RX FIFO is sign-extended
- 0 = Data from RX FIFO is not sign-extended

bit 13 **IGNROV:** Ignore Receive Overflow bit
- 1 = A Receive Overflow (ROV) is NOT a critical error; during ROV, data in the FIFO is not overwritten by the receive data
- 0 = A ROV is a critical error that stops SPI operation

bit 12 **IGNTUR:** Ignore Transmit Underrun bit
- 1 = A Transmit Underrun (TUR) is NOT a critical error and data indicated by URDTEN is transmitted until the SPIxTXB is not empty
- 0 = A TUR is a critical error that stops SPI operation

bit 11 **AUDMONO:** Audio Data Format Transmit bit(2)
- 1 = Audio data is mono (i.e., each data word is transmitted on both left and right channels)
- 0 = Audio data is stereo

bit 10 **URDTEN:** Transmit Underrun Data Enable bit(3)
- 1 = Transmits data out of SPIxURDT register during Transmit Underrun conditions
- 0 = Transmits the last received data during Transmit Underrun conditions

bit 9-8 **AUDMOD<1:0>:** Audio Protocol Mode Selection bits(4)
- 11 = PCM/DSP mode
- 10 = Right Justified mode: This module functions as if SPIFE = 1, regardless of its actual value
- 01 = Left Justified mode: This module functions as if SPIFE = 1, regardless of its actual value
- 00 = I^2S mode: This module functions as if SPIFE = 0, regardless of its actual value

bit 7 **FRMEN:** Framed SPIx Support bit
- 1 = Framed SPIx support is enabled ($\overline{SSx}$ pin is used as the FSYNC input/output)
- 0 = Framed SPIx support is disabled

Note 1: AUDEN can only be written when the SPIEN bit = 0.
2: AUDMONO can only be written when the SPIEN bit = 0 and is only valid for AUDEN = 1.
3: URDTEN is only valid when IGNTUR = 1.
4: AUDMOD<1:0> can only be written when the SPIEN bit = 0 and is only valid when AUDEN = 1. When NOT in PCM/DSP mode, this module functions as if FRMSYPW = 1, regardless of its actual value.

© 2017-2018 Microchip Technology Inc.

REGISTER 14-2: SPIxCON1H: SPIx CONTROL REGISTER 1 HIGH (CONTINUED)

bit 6 **FRMSYNC:** Frame Sync Pulse Direction Control bit
1 = Frame Sync pulse input (Slave)
0 = Frame Sync pulse output (Master)

bit 5 **FRMPOL:** Frame Sync/Slave Select Polarity bit
1 = Frame Sync pulse/Slave select is active-high
0 = Frame Sync pulse/Slave select is active-low

bit 4 **MSSEN:** Master Mode Slave Select Enable bit
1 = SPIx Slave select support is enabled with polarity determined by FRMPOL ($\overline{SSx}$ pin is automatically driven during transmission in Master mode)
0 = Slave select SPIx support is disabled ($\overline{SSx}$ pin will be controlled by port I/O)

bit 3 **FRMSYPW:** Frame Sync Pulse-Width bit
1 = Frame Sync pulse is one serial word length wide (as defined by MODE<32,16>/WLENGTH<4:0>)
0 = Frame Sync pulse is one clock (SCKx) wide

bit 2-0 **FRMCNT<2:0>:** Frame Sync Pulse Counter bits
Controls the number of serial words transmitted per Sync pulse.
111 = Reserved
110 = Reserved
101 = Generates a Frame Sync pulse on every 32 serial words
100 = Generates a Frame Sync pulse on every 16 serial words
011 = Generates a Frame Sync pulse on every 8 serial words
010 = Generates a Frame Sync pulse on every 4 serial words
001 = Generates a Frame Sync pulse on every 2 serial words (value used by audio protocols)
000 = Generates a Frame Sync pulse on each serial word

Note 1: AUDEN can only be written when the SPIEN bit = 0.
2: AUDMONO can only be written when the SPIEN bit = 0 and is only valid for AUDEN = 1.
3: URDTEN is only valid when IGNTUR = 1.
4: AUDMOD<1:0> can only be written when the SPIEN bit = 0 and is only valid when AUDEN = 1. When NOT in PCM/DSP mode, this module functions as if FRMSYPW = 1, regardless of its actual value.

REGISTER 14-3: SPIxCON2L: SPIx CONTROL REGISTER 2 LOW

U-0	U-0	U-0	U-0	U-0	U-0	U-0	U-0
—	—	—	—	—	—	—	—
bit 15							bit 8

U-0	U-0	U-0	R/W-0	R/W-0	R/W-0	R/W-0	R/W-0
—	—	—	WLENGTH<4:0>(1,2)				
bit 7							bit 0

Legend:			
R = Readable bit	W = Writable bit	U = Unimplemented bit, read as ‘0’	
-n = Value at POR	‘1’ = Bit is set	‘0’ = Bit is cleared	x = Bit is unknown

bit 15-5 **Unimplemented:** Read as ‘0’

bit 4-0 **WLENGTH<4:0>:** Variable Word Length bits(1,2)

11111 = 32-bit data
11110 = 31-bit data
11101 = 30-bit data
11100 = 29-bit data
11011 = 28-bit data
11010 = 27-bit data
11001 = 26-bit data
11000 = 25-bit data
10111 = 24-bit data
10110 = 23-bit data
10101 = 22-bit data
10100 = 21-bit data
10011 = 20-bit data
10010 = 19-bit data
10001 = 18-bit data
10000 = 17-bit data
01111 = 16-bit data
01110 = 15-bit data
01101 = 14-bit data
01100 = 13-bit data
01011 = 12-bit data
01010 = 11-bit data
01001 = 10-bit data
01000 = 9-bit data
00111 = 8-bit data
00110 = 7-bit data
00101 = 6-bit data
00100 = 5-bit data
00011 = 4-bit data
00010 = 3-bit data
00001 = 2-bit data
00000 = See MODE<32,16> bits in SPIxCON1L<11:10>

Note 1: These bits are effective when AUDEN = 0 only.
2: Varying the length by changing these bits does not affect the depth of the TX/RX FIFO.

© 2017-2018 Microchip Technology Inc.

REGISTER 14-4: SPIxSTATL: SPIx STATUS REGISTER LOW

U-0	U-0	U-0	HS/R/C-0	HSC/R-0	U-0	U-0	HSC/R-0
—	—	—	FRMERR	SPIBUSY	—	—	SPITUR(1)
bit 15							bit 8

HSC/R-0	HS/R/C-0	HSC/R-1	U-0	HSC/R-1	U-0	HSC/R-0	HSC/R-0
SRMT	SPIROV	SPIRBE	—	SPITBE	—	SPITBF	SPIRBF
bit 7							bit 0

Legend:	C = Clearable bit	U = Unimplemented, read as ‘0’	
R = Readable bit	W = Writable bit	HSC = Hardware Settable/Clearable bit	
-n = Value at POR	‘1’ = Bit is set	‘0’ = Bit is cleared	HS = Hardware Settable bit

bit 15-13 **Unimplemented:** Read as ‘0’

bit 12 **FRMERR**: SPIx Frame Error Status bit
1 = Frame error is detected
0 = No frame error is detected

bit 11 **SPIBUSY:** SPIx Activity Status bit
1 = Module is currently busy with some transactions
0 = No ongoing transactions (at time of read)

bit 10-9 **Unimplemented:** Read as ‘0’

bit 8 **SPITUR:** SPIx Transmit Underrun Status bit(1)
1 = Transmit buffer has encountered a Transmit Underrun condition
0 = Transmit buffer does not have a Transmit Underrun condition

bit 7 **SRMT:** Shift Register Empty Status bit
1 = No current or pending transactions (i.e., neither SPIxTXB or SPIxTXSR contains data to transmit)
0 = Current or pending transactions

bit 6 **SPIROV:** SPIx Receive Overflow Status bit
1 = A new byte/half-word/word has been completely received when the SPIxRXB was full
0 = No overflow

bit 5 **SPIRBE:** SPIx RX Buffer Empty Status bit
1 = RX buffer is empty
0 = RX buffer is not empty
Standard Buffer Mode:
Automatically set in hardware when SPIxBUF is read from, reading SPIxRXB. Automatically cleared in hardware when SPIx transfers data from SPIxRXSR to SPIxRXB.
Enhanced Buffer Mode:
Indicates RXELM<5:0> = 000000.

bit 4 **Unimplemented:** Read as ‘0’

Note 1: SPITUR is cleared when SPIEN = 0. When IGNTUR = 1, SPITUR provides dynamic status of the Transmit Underrun condition, but does not stop RX/TX operation and does not need to be cleared by software.

REGISTER 14-4: SPIxSTATL: SPIx STATUS REGISTER LOW (CONTINUED)

bit 3 **SPITBE:** SPIx Transmit Buffer Empty Status bit

1 = SPIxTXB is empty
0 = SPIxTXB is not empty

Standard Buffer Mode:
Automatically set in hardware when SPIx transfers data from SPIxTXB to SPIxTXSR. Automatically cleared in hardware when SPIxBUF is written, loading SPIxTXB.

Enhanced Buffer Mode:
Indicates TXELM<5:0> = 000000.

bit 2 **Unimplemented:** Read as '0'

bit 1 **SPITBF:** SPIx Transmit Buffer Full Status bit

1 = SPIxTXB is full
0 = SPIxTXB not full

Standard Buffer Mode:
Automatically set in hardware when SPIxBUF is written, loading SPIxTXB. Automatically cleared in hardware when SPIx transfers data from SPIxTXB to SPIxTXSR.

Enhanced Buffer Mode:
Indicates TXELM<5:0> = 111111.

bit 0 **SPIRBF:** SPIx Receive Buffer Full Status bit

1 = SPIxRXB is full
0 = SPIxRXB is not full

Standard Buffer Mode:
Automatically set in hardware when SPIx transfers data from SPIxRXSR to SPIxRXB. Automatically cleared in hardware when SPIxBUF is read from, reading SPIxRXB.

Enhanced Buffer Mode:
Indicates RXELM<5:0> = 111111.

Note 1: SPITUR is cleared when SPIEN = 0. When IGNTUR = 1, SPITUR provides dynamic status of the Transmit Underrun condition, but does not stop RX/TX operation and does not need to be cleared by software.

© 2017-2018 Microchip Technology Inc.

REGISTER 14-5: SPIxSTATH: SPIx STATUS REGISTER HIGH

U-0	U-0	HSC/R-0	HSC/R-0	HSC/R-0	HSC/R-0	HSC/R-0	HSC/R-0
—	—	RXELM5(3)	RXELM4(2)	RXELM3(1)	RXELM2	RXELM1	RXELM0
bit 15							bit 8

U-0	U-0	HSC/R-0	HSC/R-0	HSC/R-0	HSC/R-0	HSC/R-0	HSC/R-0
—	—	TXELM5(3)	TXELM4(2)	TXELM3(1)	TXELM2	TXELM1	TXELM0
bit 7							bit 0

Legend:	HSC = Hardware Settable/Clearable bit		
R = Readable bit	W = Writable bit	U = Unimplemented bit, read as ‘0’	
-n = Value at POR	‘1’ = Bit is set	‘0’ = Bit is cleared	x = Bit is unknown

bit 15-14 **Unimplemented:** Read as ‘0’

bit 13-8 **RXELM<5:0>:** Receive Buffer Element Count bits (valid in Enhanced Buffer mode)(1,2,3)

bit 7-6 **Unimplemented:** Read as ‘0’

bit 5-0 **TXELM<5:0>:** Transmit Buffer Element Count bits (valid in Enhanced Buffer mode)(1,2,3)

Note 1: RXELM3 and TXELM3 bits are only present when FIFODEPTH = 8 or higher.

2: RXELM4 and TXELM4 bits are only present when FIFODEPTH = 16 or higher.

3: RXELM5 and TXELM5 bits are only present when FIFODEPTH = 32.

REGISTER 14-6: SPIxIMSKL: SPIx INTERRUPT MASK REGISTER LOW

U-0	U-0	U-0	R/W-0	R/W-0	U-0	U-0	R/W-0
—	—	—	FRMERREN	BUSYEN	—	—	SPITUREN
bit 15							bit 8

R/W-0	R/W-0	R/W-0	U-0	R/W-0	U-0	R/W-0	R/W-0
SRMTEN	SPIROVEN	SPIRBEN	—	SPITBEN	—	SPITBFEN	SPIRBFEN
bit 7							bit 0

Legend:			
R = Readable bit	W = Writable bit	U = Unimplemented bit, read as ‘0’	
-n = Value at POR	‘1’ = Bit is set	‘0’ = Bit is cleared	x = Bit is unknown

bit 15-13 **Unimplemented:** Read as ‘0’

bit 12 **FRMERREN:** Enable Interrupt Events via FRMERR bit
1 = Frame error generates an interrupt event
0 = Frame error does not generate an interrupt event

bit 11 **BUSYEN:** Enable Interrupt Events via SPIBUSY bit
1 = SPIBUSY generates an interrupt event
0 = SPIBUSY does not generate an interrupt event

bit 10-9 **Unimplemented:** Read as ‘0’

bit 8 **SPITUREN:** Enable Interrupt Events via SPITUR bit
1 = Transmit Underrun (TUR) generates an interrupt event
0 = Transmit Underrun does not generate an interrupt event

bit 7 **SRMTEN:** Enable Interrupt Events via SRMT bit
1 = Shift Register Empty (SRMT) generates interrupt events
0 = Shift Register Empty does not generate interrupt events

bit 6 **SPIROVEN:** Enable Interrupt Events via SPIROV bit
1 = SPIx Receive Overflow (ROV) generates an interrupt event
0 = SPIx Receive Overflow does not generate an interrupt event

bit 5 **SPIRBEN:** Enable Interrupt Events via SPIRBE bit
1 = SPIx RX buffer empty generates an interrupt event
0 = SPIx RX buffer empty does not generate an interrupt event

bit 4 **Unimplemented:** Read as ‘0’

bit 3 **SPITBEN:** Enable Interrupt Events via SPITBE bit
1 = SPIx transmit buffer empty generates an interrupt event
0 = SPIx transmit buffer empty does not generate an interrupt event

bit 2 **Unimplemented:** Read as ‘0’

bit 1 **SPITBFEN:** Enable Interrupt Events via SPITBF bit
1 = SPIx transmit buffer full generates an interrupt event
0 = SPIx transmit buffer full does not generate an interrupt event

bit 0 **SPIRBFEN:** Enable Interrupt Events via SPIRBF bit
1 = SPIx receive buffer full generates an interrupt event
0 = SPIx receive buffer full does not generate an interrupt event

© 2017-2018 Microchip Technology Inc.

REGISTER 14-7: SPIxIMSKH: SPIx INTERRUPT MASK REGISTER HIGH

R/W-0	U-0	R/W-0	R/W-0	R/W-0	R/W-0	R/W-0	R/W-0
RXWIEN	—	RXMSK5(1)	RXMSK4(1,4)	RXMSK3(1,3)	RXMSK2(1,2)	RXMSK1(1)	RXMSK0(1)
bit 15							bit 8

R/W-0	U-0	R/W-0	R/W-0	R/W-0	R/W-0	R/W-0	R/W-0
TXWIEN	—	TXMSK5(1)	TXMSK4(1,4)	TXMSK3(1,3)	TXMSK2(1,2)	TXMSK1(1)	TXMSK0(1)
bit 7							bit 0

Legend:			
R = Readable bit	W = Writable bit	U = Unimplemented bit, read as ‘0’	
-n = Value at POR	‘1’ = Bit is set	‘0’ = Bit is cleared	x = Bit is unknown

bit 15 **RXWIEN:** Receive Watermark Interrupt Enable bit
`1` = Triggers receive buffer element watermark interrupt when RXMSK<5:0> ≤ RXELM<5:0>
`0` = Disables receive buffer element watermark interrupt

bit 14 **Unimplemented:** Read as ‘`0`’

bit 13-8 **RXMSK<5:0>:** RX Buffer Mask bits(1,2,3,4)
RX mask bits; used in conjunction with the RXWIEN bit.

bit 7 **TXWIEN:** Transmit Watermark Interrupt Enable bit
`1` = Triggers transmit buffer element watermark interrupt when TXMSK<5:0> = TXELM<5:0>
`0` = Disables transmit buffer element watermark interrupt

bit 6 **Unimplemented:** Read as ‘`0`’

bit 5-0 **TXMSK<5:0>:** TX Buffer Mask bits(1,2,3,4)
TX mask bits; used in conjunction with the TXWIEN bit.

Note 1: Mask values higher than FIFODEPTH are not valid. The module will not trigger a match for any value in this case.
2: RXMSK2 and TXMSK2 bits are only present when FIFODEPTH = 8 or higher.
3: RXMSK3 and TXMSK3 bits are only present when FIFODEPTH = 16 or higher.
4: RXMSK4 and TXMSK4 bits are only present when FIFODEPTH = 32.

FIGURE 14-3: SPIx MASTER/SLAVE CONNECTION (STANDARD MODE)

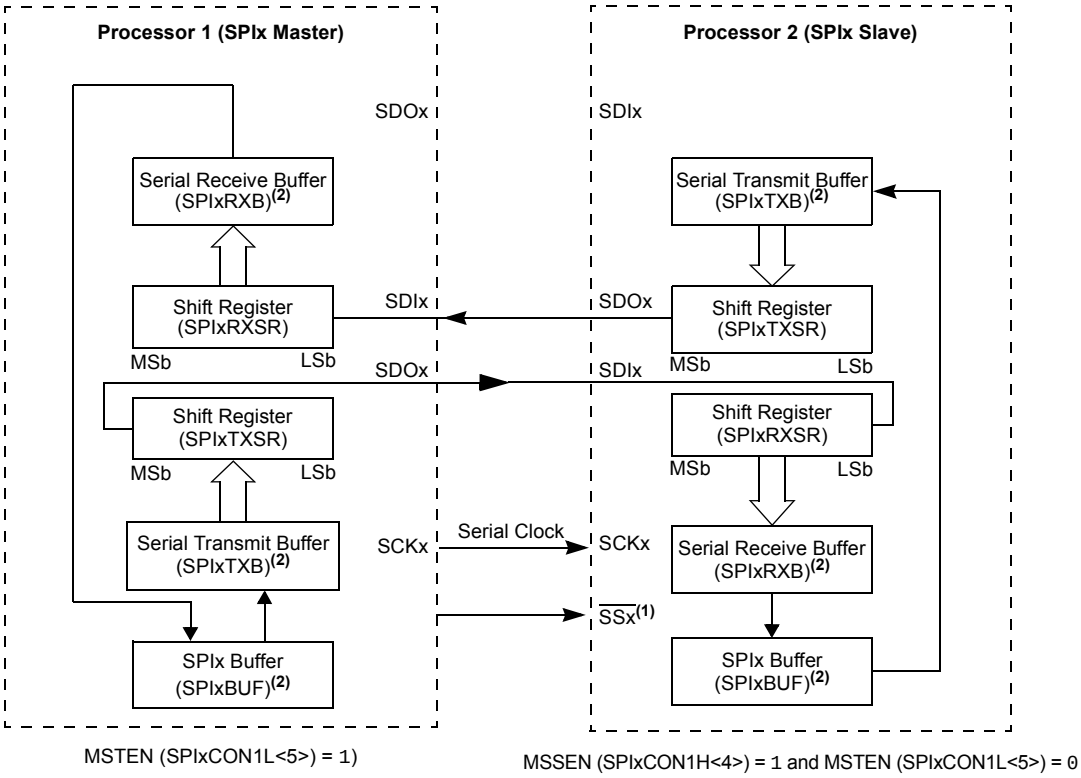

Note 1: Using the $\overline{SSx}$ pin in Slave mode of operation is optional.

2: User must write transmit data to read the received data from SPIxBUF. The SPIxTXB and SPIxRXB registers are memory-mapped to SPIxBUF.

© 2017-2018 Microchip Technology Inc.

FIGURE 14-4: SPIx MASTER/SLAVE CONNECTION (ENHANCED BUFFER MODES)

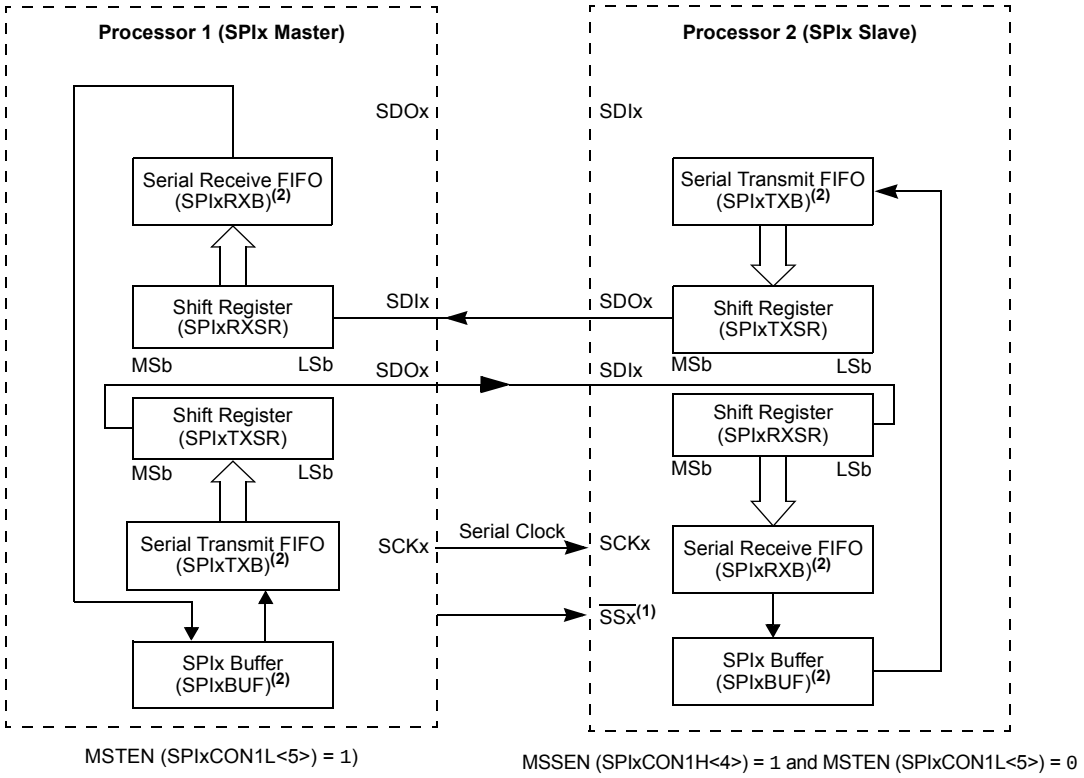

Note 1: Using the $\overline{SSx}$ pin in Slave mode of operation is optional.

2: User must write transmit data to read the received data from SPIxBUF. The SPIxTXB and SPIxRXB registers are memory-mapped to SPIxBUF.

FIGURE 14-5: SPIx MASTER, FRAME MASTER CONNECTION DIAGRAM

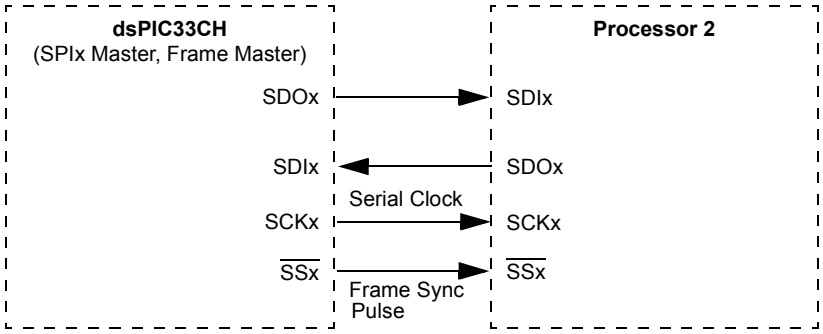

FIGURE 14-6: SPIx MASTER, FRAME SLAVE CONNECTION DIAGRAM

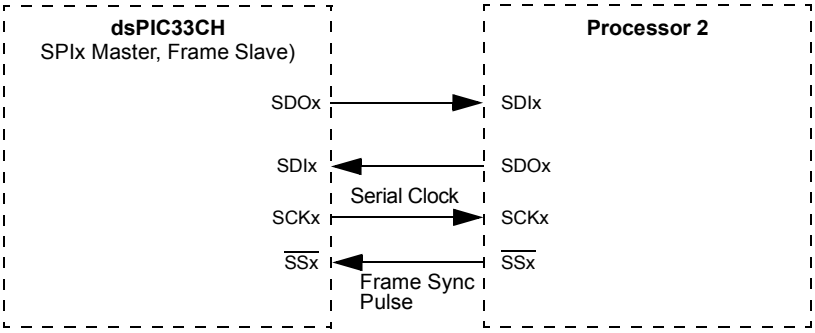

FIGURE 14-7: SPIx SLAVE, FRAME MASTER CONNECTION DIAGRAM

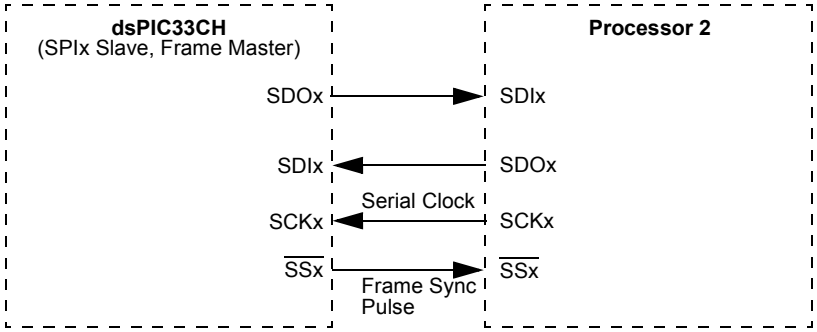

FIGURE 14-8: SPIx SLAVE, FRAME SLAVE CONNECTION DIAGRAM

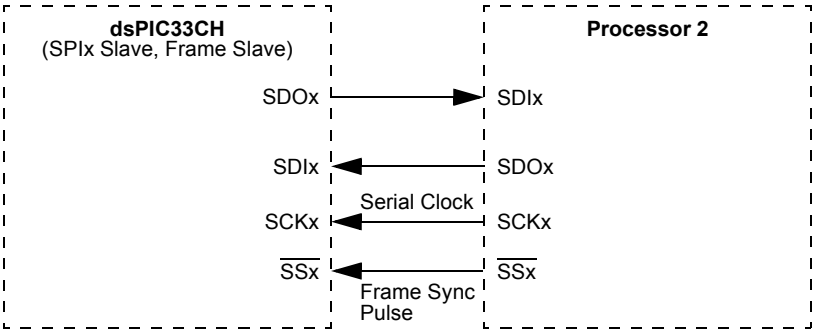

EQUATION 14-1: RELATIONSHIP BETWEEN DEVICE AND SPIx CLOCK SPEED

$$Baud\ Rate = \frac{FPB}{(2 * (SPIxBRG + 1))}$$

Where:

FPB is the Peripheral Bus Clock Frequency.

© 2017-2018 Microchip Technology Inc.

15.0 INTER-INTEGRATED CIRCUIT (I^2C)

Note 1: This data sheet summarizes the features of the dsPIC33CH128MP508 family of devices. It is not intended to be a comprehensive reference source. For more information, refer to **"Inter-Integrated Circuit (I^2C)"** (DS70000195) in the *"dsPIC33/PIC24 Family Reference Manual"*, which is available from the Microchip web site (www.microchip.com).

2: The I^2C is identical for both Master core and Slave core. The x is common for both Master and Slave (where the x represents the number of the specific module being addressed). The number of I^2C modules available on the Master and Slave is different and they are located in different SFR locations.

3: All associated register names are the same on the Master core and the Slave core. The Slave code will be developed in a separate project in MPLAB® X IDE with the device selection, dsPIC33CH128MP508**S1**, where the **S1** indicates the Slave device. The Master I^2C is I2C1 and I2C2, and the Slave is I2C1.

The Inter-Integrated Circuit (I^2C) module is a serial interface useful for communicating with other peripheral or microcontroller devices. These peripheral devices may be serial EEPROMs, display drivers, A/D Converters, etc.

The I^2C module supports these features:

- Independent Master and Slave Logic
- 7-Bit and 10-Bit Device Addresses
- General Call Address as Defined in the I^2C Protocol
- Clock Stretching to Provide Delays for the Processor to Respond to a Slave Data Request
- Both 100 kHz and 400 kHz Bus Specifications
- Configurable Address Masking
- Multi-Master modes to Prevent Loss of Messages in Arbitration
- Bus Repeater mode, Allowing the Acceptance of All Messages as a Slave, regardless of the Address
- Automatic SCL

A block diagram of the module is shown in Figure 15-1.

15.1 Communicating as a Master in a Single Master Environment

The details of sending a message in Master mode depends on the communication protocol for the device being communicated with. Typically, the sequence of events is as follows:

1. Assert a Start condition on SDAx and SCLx.
2. Send the I^2C device address byte to the Slave with a write indication.
3. Wait for and verify an Acknowledge from the Slave.
4. Send the first data byte (sometimes known as the command) to the Slave.
5. Wait for and verify an Acknowledge from the Slave.
6. Send the serial memory address low byte to the Slave.
7. Repeat Steps 4 and 5 until all data bytes are sent.
8. Assert a Repeated Start condition on SDAx and SCLx.
9. Send the device address byte to the Slave with a read indication.
10. Wait for and verify an Acknowledge from the Slave.
11. Enable Master reception to receive serial memory data.
12. Generate an ACK or NACK condition at the end of a received byte of data.
13. Generate a Stop condition on SDAx and SCLx.

FIGURE 15-1: I2Cx BLOCK DIAGRAM

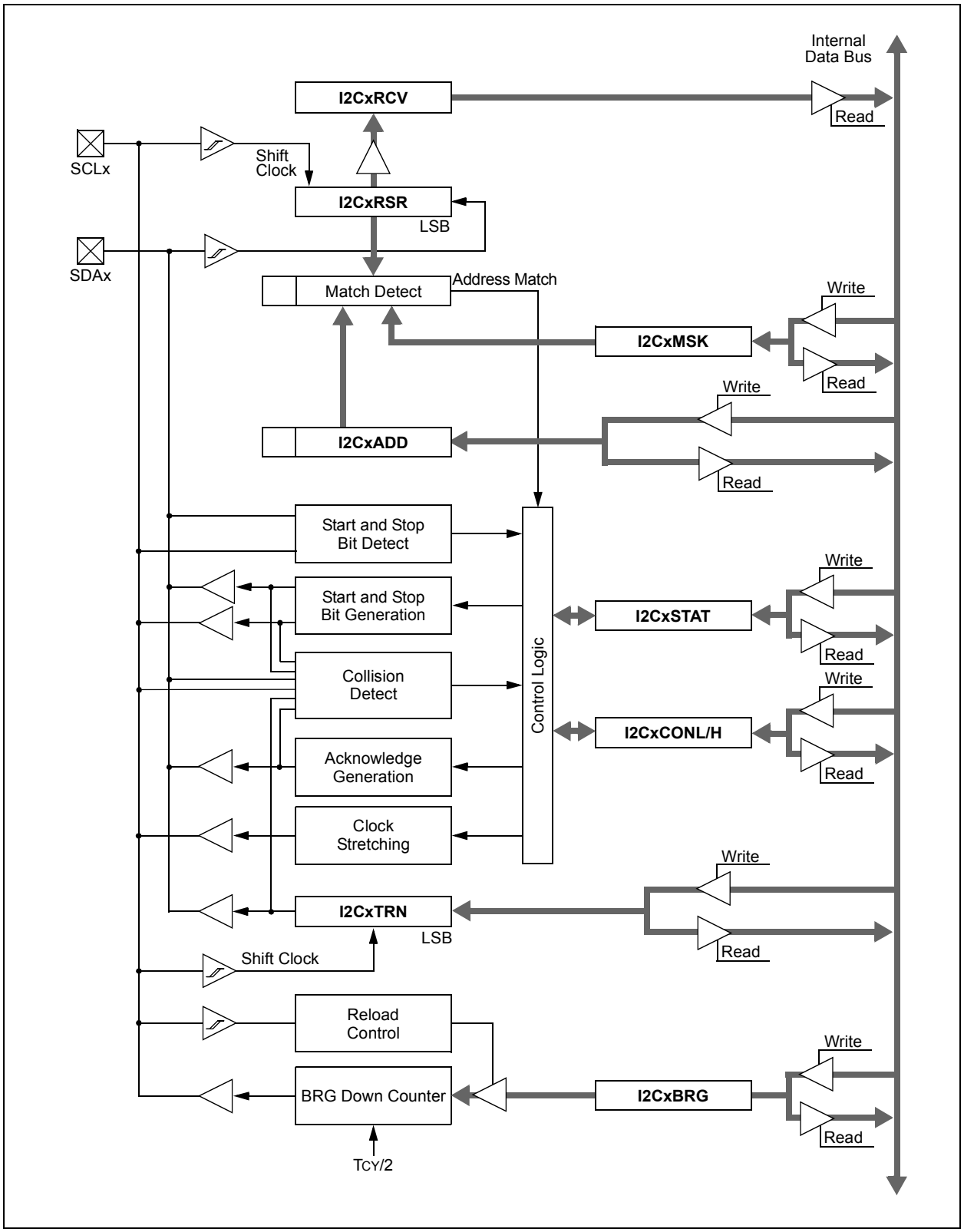

© 2017-2018 Microchip Technology Inc.

15.2 Setting Baud Rate When Operating as a Bus Master

To compute the Baud Rate Generator reload value, use Equation 15-1.

EQUATION 15-1: COMPUTING BAUD RATE RELOAD VALUE(1,2,3,4)

$$I2CxBRG = ((1/F_{SCL} - Delay) \cdot F_{CY}/2) - 2$$

Note 1: Based on $F_{CY} = F_{OSC}/2$; Doze mode and PLL are disabled.

2: These clock rate values are for guidance only. The actual clock rate can be affected by various system-level parameters. The actual clock rate should be measured in its intended application.

3: Typical value of delay varies from 110 ns to 150 ns.

4: I2CxBRG values of 0 to 3 are expressly forbidden. The user should never program the I2CxBRG with a value of 0x0, 0x1, 0x2 or 0x3 as indeterminate results may occur.

15.3 Slave Address Masking

The I2CxMSK register (Register 15-4) designates address bit positions as “don’t care” for both 7-Bit and 10-Bit Addressing modes. Setting a particular bit location (= 1) in the I2CxMSK register causes the Slave module to respond, whether the corresponding address bit value is a ‘0’ or a ‘1’. For example, when I2CxMSK is set to ‘0010000000’, the Slave module will detect both addresses, ‘0000000000’ and ‘0010000000’.

To enable address masking, the Intelligent Peripheral Management Interface (IPMI) must be disabled by clearing the STRICT bit (I2CxCONL<11>).

Note: As a result of changes in the I²C protocol, the addresses in Table 15-2 are reserved and will not be Acknowledged in Slave mode. This includes any address mask settings that include any of these addresses.

TABLE 15-1: I2Cx CLOCK RATES(1,2)

FCY	FSCL	I2CxBRG Value	
		Decimal	Hexadecimal
100 MHz	1 MHz	41	29
100 MHz	400 kHz	116	74
100 MHz	100 kHz	491	1EB
80 MHz	1 MHz	32	20
80 MHz	400 kHz	92	5C
80 MHz	100 kHz	392	188
60 MHz	1 MHz	24	18
60 MHz	400 kHz	69	45
60 MHz	100 kHz	294	126
40 MHz	1 MHz	15	0F
40 MHz	400 kHz	45	2D
40 MHz	100 kHz	195	C3
20 MHz	1 MHz	7	7
20 MHz	400 kHz	22	16
20 MHz	100 kHz	97	61

Note 1: Based on $F_{CY} = F_{OSC}/2$; Doze mode and PLL are disabled.

2: These clock rate values are for guidance only. The actual clock rate can be affected by various system-level parameters. The actual clock rate should be measured in its intended application.

TABLE 15-2: I2Cx RESERVED ADDRESSES[1]

Slave Address	R/$\overline{W}$ Bit	Description
0000 000	0	General Call Address[2]
0000 000	1	Start Byte
0000 001	x	Cbus Address
0000 01x	x	Reserved
0000 1xx	x	HS Mode Master Code
1111 0xx	x	10-Bit Slave Upper Byte[3]
1111 1xx	x	Reserved

Note 1: The address bits listed here will never cause an address match independent of address mask settings.

2: This address will be Acknowledged only if GCEN = 1.

3: A match on this address can only occur on the upper byte in 10-Bit Addressing mode.

© 2017-2018 Microchip Technology Inc.

15.4 I²C Control/Status Registers

REGISTER 15-1: I2CxCONL: I2Cx CONTROL REGISTER LOW

R/W-0	U-0	HC/R/W-0	R/W-1	R/W-0	R/W-0	R/W-0	R/W-0
I2CEN	—	I2CSIDL	SCLREL(1)	STRICT	A10M	DISSLW	SMEN
bit 15							bit 8

R/W-0	R/W-0	R/W-0	HC/R/W-0	HC/R/W-0	HC/R/W-0	HC/R/W-0	HC/R/W-0
GCEN	STREN	ACKDT	ACKEN	RCEN	PEN	RSEN	SEN
bit 7							bit 0

Legend:	HC = Hardware Clearable bit		
R = Readable bit	W = Writable bit	U = Unimplemented bit, read as ‘0’	
-n = Value at POR	‘1’ = Bit is set	‘0’ = Bit is cleared	x = Bit is unknown

bit 15 **I2CEN:** I2Cx Enable bit (writable from software only)
1 = Enables the I2Cx module, and configures the SDAx and SCLx pins as serial port pins
0 = Disables the I2Cx module; all I²C pins are controlled by port functions

bit 14 **Unimplemented:** Read as ‘0’

bit 13 **I2CSIDL:** I2Cx Stop in Idle Mode bit
1 = Discontinues module operation when device enters Idle mode
0 = Continues module operation in Idle mode

bit 12 **SCLREL:** SCLx Release Control bit (I²C Slave mode only)(1)
1 = Releases the SCLx clock
0 = Holds the SCLx clock low (clock stretch)
If STREN = 1:(2)
User software may write ‘0’ to initiate a clock stretch and write ‘1’ to release the clock. Hardware clears at the beginning of every Slave data byte transmission. Hardware clears at the end of every Slave address byte reception. Hardware clears at the end of every Slave data byte reception.
If STREN = 0:
User software may only write ‘1’ to release the clock. Hardware clears at the beginning of every Slave data byte transmission. Hardware clears at the end of every Slave address byte reception.

bit 11 **STRICT:** I2Cx Strict Reserved Address Rule Enable bit
1 = Strict Reserved Addressing is enforced; for reserved addresses, refer to Table 15-2.
(In Slave Mode) – The device doesn’t respond to reserved address space and addresses falling in that category are NACKed.
(In Master Mode) – The device is allowed to generate addresses with reserved address space.
0 = Reserved Addressing would be Acknowledged.
(In Slave Mode) – The device will respond to an address falling in the reserved address space. When there is a match with any of the reserved addresses, the device will generate an ACK.
(In Master Mode) – Reserved.

bit 10 **A10M:** 10-Bit Slave Address Flag bit
1 = I2CxADD is a 10-bit Slave address
0 = I2CxADD is a 7-bit Slave address

bit 9 **DISSLW:** Slew Rate Control Disable bit
1 = Slew rate control is disabled for Standard Speed mode (100 kHz, also disabled for 1 MHz mode)
0 = Slew rate control is enabled for High-Speed mode (400 kHz)

Note 1: Automatically cleared to ‘0’ at the beginning of Slave transmission; automatically cleared to ‘0’ at the end of Slave reception.
2: Automatically cleared to ‘0’ at the beginning of Slave transmission.

REGISTER 15-1: I2CxCONL: I2Cx CONTROL REGISTER LOW (CONTINUED)

bit 8 **SMEN:** SMBus Input Levels Enable bit
1 = Enables input logic so thresholds are compliant with the SMBus specification
0 = Disables SMBus-specific inputs

bit 7 **GCEN:** General Call Enable bit (I^2C Slave mode only)
1 = Enables interrupt when a general call address is received in I2CxRSR; module is enabled for reception
0 = General call address is disabled.

bit 6 **STREN:** SCLx Clock Stretch Enable bit
In I^2C Slave mode only; used in conjunction with the SCLREL bit.
1 = Enables clock stretching
0 = Disables clock stretching

bit 5 **ACKDT:** Acknowledge Data bit
In I^2C Master mode during Master Receive mode. The value that will be transmitted when the user initiates an Acknowledge sequence at the end of a receive.
In I^2C Slave mode when AHEN = 1 or DHEN = 1. The value that the Slave will transmit when it initiates an Acknowledge sequence at the end of an address or data reception.
1 = NACK is sent
0 = ACK is sent

bit 4 **ACKEN:** Acknowledge Sequence Enable bit
In I^2C Master mode only; applicable during Master Receive mode.
1 = Initiates Acknowledge sequence on SDAx and SCLx pins, and transmits ACKDT data bit
0 = Acknowledge sequence is Idle

bit 3 **RCEN:** Receive Enable bit (I^2C Master mode only)
1 = Enables Receive mode for I^2C; automatically cleared by hardware at end of 8-bit receive data byte
0 = Receive sequence is not in progress

bit 2 **PEN:** Stop Condition Enable bit (I^2C Master mode only)
1 = Initiates Stop condition on SDAx and SCLx pins
0 = Stop condition is Idle

bit 1 **RSEN:** Restart Condition Enable bit (I^2C Master mode only)
1 = Initiates Restart condition on SDAx and SCLx pins
0 = Restart condition is Idle

bit 0 **SEN:** Start Condition Enable bit (I^2C Master mode only)
1 = Initiates Start condition on SDAx and SCLx pins
0 = Start condition is Idle

Note 1: Automatically cleared to ‘0’ at the beginning of Slave transmission; automatically cleared to ‘0’ at the end of Slave reception.

2: Automatically cleared to ‘0’ at the beginning of Slave transmission.

© 2017-2018 Microchip Technology Inc.

REGISTER 15-2: I2CxCONH: I2Cx CONTROL REGISTER HIGH

U-0	U-0	U-0	U-0	U-0	U-0	U-0	U-0
—	—	—	—	—	—	—	—
bit 15							bit 8

U-0	R/W-0	R/W-0	R/W-0	R/W-0	R/W-0	R/W-0	R/W-0
—	PCIE	SCIE	BOEN	SDAHT	SBCDE	AHEN	DHEN
bit 7							bit 0

Legend:			
R = Readable bit	W = Writable bit	U = Unimplemented bit, read as ‘0’	
-n = Value at POR	‘1’ = Bit is set	‘0’ = Bit is cleared	x = Bit is unknown

bit 15-7 **Unimplemented:** Read as ‘0’

bit 6 **PCIE:** Stop Condition Interrupt Enable bit (I^2C Slave mode only).
1 = Enables interrupt on detection of Stop condition
0 = Stop detection interrupts are disabled

bit 5 **SCIE:** Start Condition Interrupt Enable bit (I^2C Slave mode only)
1 = Enables interrupt on detection of Start or Restart conditions
0 = Start detection interrupts are disabled

bit 4 **BOEN:** Buffer Overwrite Enable bit (I^2C Slave mode only)
1 = I2CxRCV is updated and an ACK is generated for a received address/data byte, ignoring the state of the I2COV bit only if RBF bit = 0
0 = I2CxRCV is only updated when I2COV is clear

bit 3 **SDAHT:** SDAx Hold Time Selection bit
1 = Minimum of 300 ns hold time on SDAx after the falling edge of SCLx
0 = Minimum of 100 ns hold time on SDAx after the falling edge of SCLx

bit 2 **SBCDE:** Slave Mode Bus Collision Detect Enable bit (I^2C Slave mode only)
If, on the rising edge of SCLx, SDAx is sampled low when the module is outputting a high state, the BCL bit is set and the bus goes Idle. This Detection mode is only valid during data and ACK transmit sequences.
1 = Enables Slave bus collision interrupts
0 = Slave bus collision interrupts are disabled

bit 1 **AHEN:** Address Hold Enable bit (I^2C Slave mode only)
1 = Following the 8th falling edge of SCLx for a matching received address byte; SCLREL bit (I2CxCONL<12>) will be cleared and the SCLx will be held low
0 = Address holding is disabled

bit 0 **DHEN:** Data Hold Enable bit (I^2C Slave mode only)
1 = Following the 8th falling edge of SCLx for a received data byte; Slave hardware clears the SCLREL bit (I2CxCONL<12>) and SCLx is held low
0 = Data holding is disabled

REGISTER 15-3: I2CxSTAT: I2Cx STATUS REGISTER

HSC/R-0	HSC/R-0	HSC/R-0	U-0	U-0	HSC/R/C-0	HSC/R-0	HSC/R-0
ACKSTAT	TRSTAT	ACKTIM	—	—	BCL	GCSTAT	ADD10
bit 15							bit 8

HS/R/C-0	HS/R/C-0	HSC/R-0	HSC/R-0	HSC/R-0	HSC/R-0	HSC/R-0	HSC/R-0
IWCOL	I2COV	D/$\overline{A}$	P	S	R/$\overline{W}$	RBF	TBF
bit 7							bit 0

Legend:	C = Clearable bit	HSC = Hardware Settable/Clearable bit	
R = Readable bit	W = Writable bit	U = Unimplemented bit, read as ‘0’	
-n = Value at POR	‘1’ = Bit is set	‘0’ = Bit is cleared	HS = Hardware Settable bit

bit 15 **ACKSTAT:** Acknowledge Status bit (updated in all Master and Slave modes)
1 = Acknowledge was not received from Slave
0 = Acknowledge was received from Slave

bit 14 **TRSTAT:** Transmit Status bit (when operating as I^2C Master; applicable to Master transmit operation)
1 = Master transmit is in progress (8 bits + ACK)
0 = Master transmit is not in progress

bit 13 **ACKTIM:** Acknowledge Time Status bit (valid in I^2C Slave mode only)
1 = Indicates I^2C bus is in an Acknowledge sequence, set on 8th falling edge of SCLx clock
0 = Not an Acknowledge sequence, cleared on 9th rising edge of SCLx clock

bit 12-11 **Unimplemented:** Read as ‘0’

bit 10 **BCL:** Bus Collision Detect bit (Master/Slave mode; cleared when I^2C module is disabled, I2CEN = 0)
1 = A bus collision has been detected during a Master or Slave transmit operation
0 = No bus collision has been detected

bit 9 **GCSTAT:** General Call Status bit (cleared after Stop detection)
1 = General call address was received
0 = General call address was not received

bit 8 **ADD10:** 10-Bit Address Status bit (cleared after Stop detection)
1 = 10-bit address was matched
0 = 10-bit address was not matched

bit 7 **IWCOL:** I2Cx Write Collision Detect bit
1 = An attempt to write to the I2CxTRN register failed because the I^2C module is busy; must be cleared in software
0 = No collision

bit 6 **I2COV:** I2Cx Receive Overflow Flag bit
1 = A byte was received while the I2CxRCV register is still holding the previous byte; I2COV is a “don’t care” in Transmit mode, must be cleared in software
0 = No overflow

bit 5 **D/$\overline{A}$:** Data/$\overline{\text{Address}}$ bit (when operating as I^2C Slave)
1 = Indicates that the last byte received was data
0 = Indicates that the last byte received or transmitted was an address

bit 4 **P:** I2Cx Stop bit
Updated when Start, Reset or Stop is detected; cleared when the I^2C module is disabled, I2CEN = 0.
1 = Indicates that a Stop bit has been detected last
0 = Stop bit was not detected last

© 2017-2018 Microchip Technology Inc.

REGISTER 15-3: I2CxSTAT: I2Cx STATUS REGISTER (CONTINUED)

bit 3 **S:** I2Cx Start bit
Updated when Start, Reset or Stop is detected; cleared when the I^2C module is disabled, I2CEN = 0.
1 = Indicates that a Start (or Repeated Start) bit has been detected last
0 = Start bit was not detected last

bit 2 **R/$\overline{W}$:** Read/$\overline{Write}$ Information bit (when operating as I^2C Slave)
1 = Read: Indicates the data transfer is output from the Slave
0 = Write: Indicates the data transfer is input to the Slave

bit 1 **RBF:** Receive Buffer Full Status bit
1 = Receive is complete, I2CxRCV is full
0 = Receive is not complete, I2CxRCV is empty

bit 0 **TBF:** Transmit Buffer Full Status bit
1 = Transmit is in progress, I2CxTRN is full (8-bits of data)
0 = Transmit is complete, I2CxTRN is empty

REGISTER 15-4: I2CxMSK: I2Cx SLAVE MODE ADDRESS MASK REGISTER

U-0	U-0	U-0	U-0	U-0	U-0	R/W-0	R/W-0
—	—	—	—	—	—	MSK<9:8>	
bit 15							bit 8

R/W-0	R/W-0	R/W-0	R/W-0	R/W-0	R/W-0	R/W-0	R/W-0
MSK<7:0>							
bit 7							bit 0

Legend:			
R = Readable bit	W = Writable bit	U = Unimplemented bit, read as ‘0’	
-n = Value at POR	‘1’ = Bit is set	‘0’ = Bit is cleared	x = Bit is unknown

bit 15-10 **Unimplemented:** Read as ‘0’

bit 9-0 **MSK<9:0>:** I2Cx Mask for Address Bit x Select bits
1 = Enables masking for bit x of the incoming message address; bit match is not required in this position
0 = Disables masking for bit x; bit match is required in this position

NOTES:

© 2017-2018 Microchip Technology Inc.

16.0 SINGLE-EDGE NIBBLE TRANSMISSION (SENT)

Note 1: This data sheet summarizes the features of this group of dsPIC33CH128MP508 family devices. It is not intended to be a comprehensive reference source. To complement the information in this data sheet, refer to **"Single-Edge Nibble Transmission (SENT) Module"** (DS70005145) in the *"dsPIC33/PIC24 Family Reference Manual"*, which is available from the Microchip web site (www.microchip.com).

2: Some registers and associated bits described in this section may not be available on all devices. Refer to **Section 3.2 "Master Memory Organization"** in this data sheet for device-specific register and bit information.

3: This SENT module is available only on the Master.

Table 16-1 shows an overview of the SENT module.

TABLE 16-1: SENT MODULE OVERVIEW

	Number of SENT Modules	Identical (Modules)
Master Core	2	Yes
Slave Core	None	NA

16.1 Module Introduction

The Single-Edge Nibble Transmission (SENT) module is based on the SAE J2716, *"SENT – Single-Edge Nibble Transmission for Automotive Applications"*. The SENT protocol is a one-way, single wire time modulated serial communication, based on successive falling edges. It is intended for use in applications where high-resolution sensor data needs to be communicated from a sensor to an Engine Control Unit (ECU).

The SENTx module has the following major features:

- Selectable Transmit or Receive mode
- Synchronous or Asynchronous Transmit modes
- Automatic Data Rate Synchronization
- Optional Automatic Detection of CRC Errors in Receive mode
- Optional Hardware Calculation of CRC in Transmit mode
- Support for Optional Pause Pulse Period
- Data Buffering for One Message Frame
- Selectable Data Length for Transmit/Receive from Three to Six Nibbles
- Automatic Detection of Framing Errors

SENT protocol timing is based on a predetermined time unit, TTICK. Both the transmitter and receiver must be preconfigured for TTICK, which can vary from 3 to 90 µs. A SENT message frame starts with a Sync pulse. The purpose of the Sync pulse is to allow the receiver to calculate the data rate of the message encoded by the transmitter. The SENT specification allows messages to be validated with up to a 20% variation in TTICK. This allows for the transmitter and receiver to run from different clocks that may be inaccurate, and drift with time and temperature. The data nibbles are four bits in length and are encoded as the data value + 12 ticks. This yields a 0 value of 12 ticks and the maximum value, 0xF, of 27 ticks.

A SENT message consists of the following:

- A synchronization/calibration period of 56 tick times
- A status nibble of 12-27 tick times
- Up to six data nibbles of 12-27 tick times
- A CRC nibble of 12-27 tick times
- An optional pause pulse period of 12-768 tick times

Figure 16-1 shows a block diagram of the SENTx module.

Figure 16-2 shows the construction of a typical 6-nibble data frame, with the numbers representing the minimum or maximum number of tick times for each section.

FIGURE 16-1: SENTx MODULE BLOCK DIAGRAM

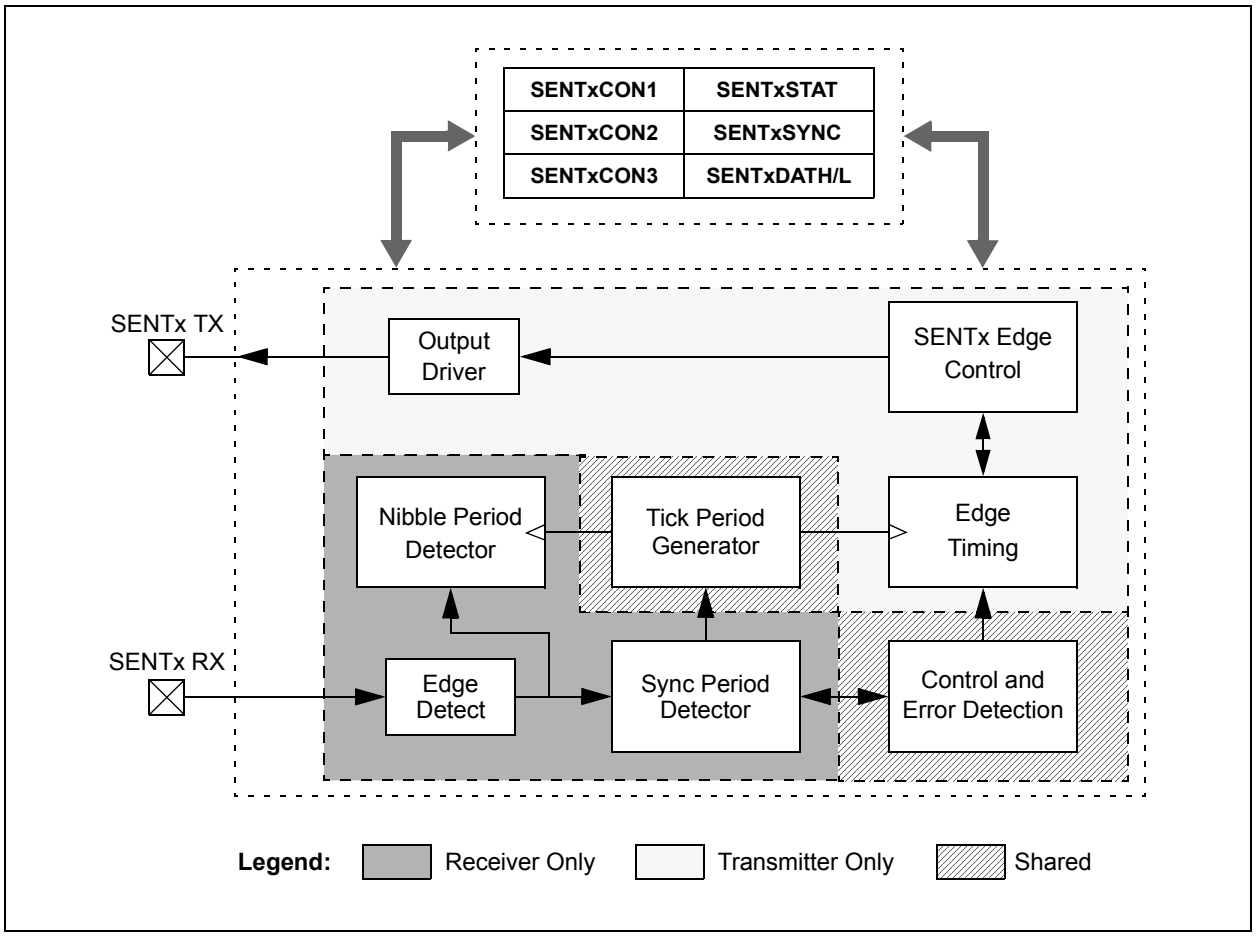

FIGURE 16-2: SENTx PROTOCOL DATA FRAMES

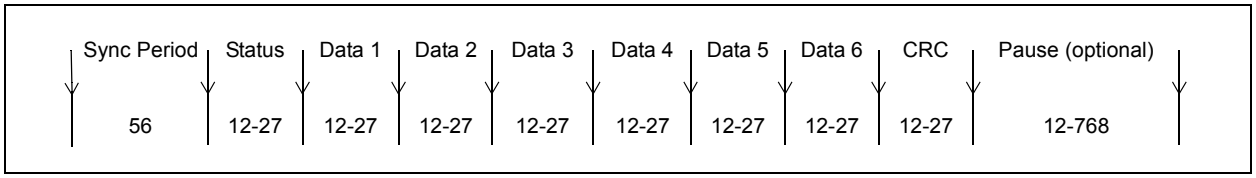

© 2017-2018 Microchip Technology Inc.

16.2 Transmit Mode

By default, the SENTx module is configured for transmit operation. The module can be configured for continuous asynchronous message frame transmission, or alternatively, for Synchronous mode triggered by software. When enabled, the transmitter will send a Sync, followed by the appropriate number of data nibbles, an optional CRC and optional pause pulse. The tick period used by the SENTx transmitter is set by writing a value to the TICKTIME<15:0> (SENTxCON2<15:0>) bits. The tick period calculations are shown in Equation 16-1.

EQUATION 16-1: TICK PERIOD CALCULATION

$$TICKTIME<15:0> = \frac{T_{TICK}}{T_{CLK}} - 1$$

An optional pause pulse can be used in Asynchronous mode to provide a fixed message frame time period. The frame period used by the SENTx transmitter is set by writing a value to the FRAMETIME<15:0> (SENTxCON3<15:0>) bits. The formulas used to calculate the value of frame time are shown in Equation 16-2.

EQUATION 16-2: FRAME TIME CALCULATIONS

$$FRAMETIME<15:0> = T_{TICK}/T_{FRAME}$$

$$FRAMETIME<15:0> \geq 122 + 27N$$

$$FRAMETIME<15:0> \geq 848 + 12N$$

Where:

T_{FRAME} = Total time of the message from ms

N = The number of data nibbles in message, 1-6

Note: The module will not produce a pause period with less than 12 ticks, regardless of the FRAMETIME<15:0> value. FRAMETIME<15:0> values beyond 2047 will have no effect on the length of a data frame.

16.2.1 TRANSMIT MODE CONFIGURATION

16.2.1.1 Initializing the SENTx Module

Perform the following steps to initialize the module:

1. Write RCVEN (SENTxCON1<11>) = `0` for Transmit mode.
2. Write TXM (SENTxCON1<10>) = `0` for Asynchronous Transmit mode or TXM = `1` for Synchronous mode.
3. Write NIBCNT<2:0> (SENTxCON1<2:0>) for the desired data frame length.
4. Write CRCEN (SENTxCON1<8>) for hardware or software CRC calculation.
5. Write PPP (SENTxCON1<7>) for optional pause pulse.
6. If PPP = `1`, write T_{FRAME} to SENTxCON3.
7. Write SENTxCON2 with the appropriate value for the desired tick period.
8. Enable interrupts and set interrupt priority.
9. Write initial status and data values to SENTxDATH/L.
10. If CRCEN = `0`, calculate CRC and write the value to CRC<3:0> (SENTxDATL<3:0>).
11. Set the SNTEN (SENTxCON1<15>) bit to enable the module.

User software updates to SENTxDATH/L must be performed after the completion of the CRC and before the next message frame's status nibble. The recommended method is to use the message frame completion interrupt to trigger data writes.

16.3 Receive Mode

The module can be configured for receive operation by setting the RCVEN (SENTxCON1<11>) bit. The time between each falling edge is compared to SYNCMIN<15:0> (SENTxCON3<15:0>) and SYNCMAX<15:0> (SENTxCON2<15:0>), and if the measured time lies between the minimum and maximum limits, the module begins to receive data. The validated Sync time is captured in the SENTxSYNC register and the tick time is calculated. Subsequent falling edges are verified to be within the valid data width and the data is stored in the SENTxDATL/H registers. An interrupt event is generated at the completion of the message and the user software should read the SENTx Data registers before the reception of the next nibble. The equation for SYNCMIN<15:0> and SYNCMAX<15:0> is shown in Equation 16-3.

EQUATION 16-3: SYNCMIN<15:0> AND SYNCMAX<15:0> CALCULATIONS

$$T_{TICK} = T_{CLK} \cdot (TICKTIME<15:0> + 1)$$

$$FRAMETIME<15:0> = T_{TICK}/T_{FRAME}$$

$$SyncCount = 8 \text{ x } F_{RCV} \text{ x } T_{TICK}$$

$$SYNCMIN<15:0> = 0.8 \text{ x } SyncCount$$

$$SYNCMAX<15:0> = 1.2 \text{ x } SyncCount$$

$$FRAMETIME<15:0> \geq 122 + 27N$$

$$FRAMETIME<15:0> \geq 848 + 12N$$

Where:

T_{FRAME} = Total time of the message from ms

N = The number of data nibbles in message, 1-6

F_{RCV} = F_{CY} x Prescaler

T_{CLK} = F_{CY}/Prescaler

For T_{TICK} = 3.0 µs and F_{CLK} = 4 MHz, SYNCMIN<15:0> = 76.

Note: To ensure a Sync period can be identified, the value written to SYNCMIN<15:0> must be less than the value written to SYNCMAX<15:0>.

16.3.1 RECEIVE MODE CONFIGURATION

16.3.1.1 Initializing the SENTx Module

Perform the following steps to initialize the module:

1. Write RCVEN (SENTxCON1<11>) = 1 for Receive mode.
2. Write NIBCNT<2:0> (SENTxCON1<2:0>) for the desired data frame length.
3. Write CRCEN (SENTxCON1<8>) for hardware or software CRC validation.
4. Write PPP (SENTxCON1<7>) = 1 if pause pulse is present.
5. Write SENTxCON2 with the value of SYNCMAXx (Nominal Sync Period + 20%).
6. Write SENTxCON3 with the value of SYNCMINx (Nominal Sync Period – 20%).
7. Enable interrupts and set interrupt priority.
8. Set the SNTEN (SENTxCON1<15>) bit to enable the module.

The data should be read from the SENTxDATL/H registers after the completion of the CRC and before the next message frame's status nibble. The recommended method is to use the message frame completion interrupt trigger.

© 2017-2018 Microchip Technology Inc.

16.4 SENT Control/Status Registers

REGISTER 16-1: SENTxCON1: SENTx CONTROL REGISTER 1

R/W-0	U-0	R/W-0	U-0	R/W-0	R/W-0	R/W-0	R/W-0
SNTEN	—	SNTSIDL	—	RCVEN	TXM(1)	TXPOL(1)	CRCEN
bit 15							bit 8

R/W-0	R/W-0	U-0	R/W-0	U-0	R/W-0	R/W-0	R/W-0
PPP	SPCEN(2)	—	PS	—	NIBCNT2	NIBCNT1	NIBCNT0
bit 7							bit 0

Legend:			
R = Readable bit	W = Writable bit	U = Unimplemented bit, read as ‘0’	
-n = Value at POR	‘1’ = Bit is set	‘0’ = Bit is cleared	x = Bit is unknown

bit 15 **SNTEN:** SENTx Enable bit
1 = SENTx is enabled
0 = SENTx is disabled

bit 14 **Unimplemented:** Read as ‘0’

bit 13 **SNTSIDL:** SENTx Stop in Idle Mode bit
1 = Discontinues module operation when the device enters Idle mode
0 = Continues module operation in Idle mode

bit 12 **Unimplemented:** Read as ‘0’

bit 11 **RCVEN:** SENTx Receive Enable bit
1 = SENTx operates as a receiver
0 = SENTx operates as a transmitter (sensor)

bit 10 **TXM:** SENTx Transmit Mode bit(1)
1 = SENTx transmits data frame only when triggered using the SYNCTXEN status bit
0 = SENTx transmits data frames continuously while SNTEN = 1

bit 9 **TXPOL:** SENTx Transmit Polarity bit(1)
1 = SENTx data output pin is low in the Idle state
0 = SENTx data output pin is high in the Idle state

bit 8 **CRCEN:** CRC Enable bit
Module in Receive Mode (RCVEN = 1):
1 = SENTx performs CRC verification on received data using the preferred J2716 method
0 = SENTx does not perform CRC verification on received data
Module in Transmit Mode (RCVEN = 1):
1 = SENTx automatically calculates CRC using the preferred J2716 method
0 = SENTx does not calculate CRC

bit 7 **PPP:** Pause Pulse Present bit
1 = SENTx is configured to transmit/receive SENT messages with pause pulse
0 = SENTx is configured to transmit/receive SENT messages without pause pulse

bit 6 **SPCEN:** Short PWM Code Enable bit(2)
1 = SPC control from external source is enabled
0 = SPC control from external source is disabled

bit 5 **Unimplemented:** Read as ‘0’

Note 1: This bit has no function in Receive mode (RCVEN = 1).
2: This bit has no function in Transmit mode (RCVEN = 0).

REGISTER 16-1: SENTxCON1: SENTx CONTROL REGISTER 1 (CONTINUED)

bit 4 **PS:** SENTx Module Clock Prescaler (divider) bits
1 = Divide-by-4
0 = Divide-by-1

bit 3 **Unimplemented:** Read as '0'

bit 2-0 **NIBCNT<2:0>:** Nibble Count Control bits
111 = Reserved; do not use
110 = Module transmits/receives six data nibbles in a SENT data pocket
101 = Module transmits/receives five data nibbles in a SENT data pocket
100 = Module transmits/receives four data nibbles in a SENT data pocket
011 = Module transmits/receives three data nibbles in a SENT data pocket
010 = Module transmits/receives two data nibbles in a SENT data pocket
001 = Module transmits/receives one data nibble in a SENT data pocket
000 = Reserved; do not use

Note 1: This bit has no function in Receive mode (RCVEN = 1).
2: This bit has no function in Transmit mode (RCVEN = 0).

© 2017-2018 Microchip Technology Inc.

REGISTER 16-2: SENTxSTAT: SENTx STATUS REGISTER

U-0	U-0	U-0	U-0	U-0	U-0	U-0	U-0
—	—	—	—	—	—	—	—
bit 15							bit 8

R-0	R-0	R-0	R-0	R-0	R/C-0	R-0	HC/R/W-0
PAUSE	NIB2	NIB1	NIB0	CRCERR	FRMERR	RXIDLE	SYNCTXEN(1)
bit 7							bit 0

Legend:	C = Clearable bit	HC = Hardware Clearable bit	
R = Readable bit	W = Writable bit	U = Unimplemented bit, read as ‘0’	
-n = Value at POR	‘1’ = Bit is set	‘0’ = Bit is cleared	x = Bit is unknown

bit 15-8 **Unimplemented:** Read as ‘0’

bit 7 **PAUSE:** Pause Period Status bit
1 = The module is transmitting/receiving a pause period
0 = The module is not transmitting/receiving a pause period

bit 6-4 **NIB<2:0>:** Nibble Status bits
Module in Transmit Mode (RCVEN = 0):
111 = Module is transmitting a CRC nibble
110 = Module is transmitting Data Nibble 6
101 = Module is transmitting Data Nibble 5
100 = Module is transmitting Data Nibble 4
011 = Module is transmitting Data Nibble 3
010 = Module is transmitting Data Nibble 2
001 = Module is transmitting Data Nibble 1
000 = Module is transmitting a status nibble or pause period, or is not transmitting
Module in Receive Mode (RCVEN = 1):
111 = Module is receiving a CRC nibble or was receiving this nibble when an error occurred
110 = Module is receiving Data Nibble 6 or was receiving this nibble when an error occurred
101 = Module is receiving Data Nibble 5 or was receiving this nibble when an error occurred
100 = Module is receiving Data Nibble 4 or was receiving this nibble when an error occurred
011 = Module is receiving Data Nibble 3 or was receiving this nibble when an error occurred
010 = Module is receiving Data Nibble 2 or was receiving this nibble when an error occurred
001 = Module is receiving Data Nibble 1 or was receiving this nibble when an error occurred
000 = Module is receiving a status nibble or waiting for Sync

bit 3 **CRCERR:** CRC Status bit (Receive mode only)
1 = A CRC error has occurred for the 1-6 data nibbles in SENTxDATL/H
0 = A CRC error has not occurred

bit 2 **FRMERR:** Framing Error Status bit (Receive mode only)
1 = A data nibble was received with less than 12 tick periods or greater than 27 tick periods
0 = Framing error has not occurred

bit 1 **RXIDLE:** SENTx Receiver Idle Status bit (Receive mode only)
1 = The SENTx data bus has been Idle (high) for a period of SYNCMAX<15:0> or greater
0 = The SENTx data bus is not Idle

Note 1: In Receive mode (RCVEN = 1), the SYNCTXEN bit is read-only.

REGISTER 16-2: SENTxSTAT: SENTx STATUS REGISTER (CONTINUED)

bit 0 **SYNCTXEN:** SENTx Synchronization Period Status/Transmit Enable bit[1]

Module in Receive Mode (RCVEN = 1):

1 = A valid synchronization period was detected; the module is receiving nibble data

0 = No synchronization period has been detected; the module is not receiving nibble data

Module in Asynchronous Transmit Mode (RCVEN = 0, TXM = 0):

The bit always reads as '1' when the module is enabled, indicating the module transmits SENTx data frames continuously. The bit reads '0' when the module is disabled.

Module in Synchronous Transmit Mode (RCVEN = 0, TXM = 1):

1 = The module is transmitting a SENTx data frame

0 = The module is not transmitting a data frame, user software may set SYNCTXEN to start another data frame transmission

Note 1: In Receive mode (RCVEN = 1), the SYNCTXEN bit is read-only.

© 2017-2018 Microchip Technology Inc.

REGISTER 16-3: SENTxDATL: SENTx RECEIVE DATA REGISTER LOW(1)

R/W-0	R/W-0	R/W-0	R/W-0	R/W-0	R/W-0	R/W-0	R/W-0
DATA4<3:0>				DATA5<3:0>			
bit 15							bit 8

R/W-0	R/W-0	R/W-0	R/W-0	R/W-0	R/W-0	R/W-0	R/W-0
DATA6<3:0>				CRC<3:0>			
bit 7							bit 0

Legend:			
R = Readable bit	W = Writable bit	U = Unimplemented bit, read as ‘0’	
-n = Value at POR	‘1’ = Bit is set	‘0’ = Bit is cleared	x = Bit is unknown

bit 15-12 **DATA4<3:0>:** Data Nibble 4 Data bits
bit 11-8 **DATA5<3:0>:** Data Nibble 5 Data bits
bit 7-4 **DATA6<3:0>:** Data Nibble 6 Data bits
bit 3-0 **CRC<3:0>:** CRC Nibble Data bits

Note 1: Register bits are read-only in Receive mode (RCVEN = 1). In Transmit mode, the CRC<3:0> bits are read-only when automatic CRC calculation is enabled (RCVEN = 0, CRCEN = 1).

REGISTER 16-4: SENTxDATH: SENTx RECEIVE DATA REGISTER HIGH(1)

R/W-0	R/W-0	R/W-0	R/W-0	R/W-0	R/W-0	R/W-0	R/W-0
STAT<3:0>				DATA1<3:0>			
bit 15							bit 8

R/W-0	R/W-0	R/W-0	R/W-0	R/W-0	R/W-0	R/W-0	R/W-0
DATA2<3:0>				DATA3<3:0>			
bit 7							bit 0

Legend:			
R = Readable bit	W = Writable bit	U = Unimplemented bit, read as ‘0’	
-n = Value at POR	‘1’ = Bit is set	‘0’ = Bit is cleared	x = Bit is unknown

bit 15-12 **STAT<3:0>:** Status Nibble Data bits
bit 11-8 **DATA1<3:0>:** Data Nibble 1 Data bits
bit 7-4 **DATA2<3:0>:** Data Nibble 2 Data bits
bit 3-0 **DATA3<3:0>:** Data Nibble 3 Data bits

Note 1: Register bits are read-only in Receive mode (RCVEN = 1). In Transmit mode, the CRC<3:0> bits are read-only when automatic CRC calculation is enabled (RCVEN = 0, CRCEN = 1).

NOTES:

© 2017-2018 Microchip Technology Inc.

17.0 TIMER1

Note 1: This data sheet summarizes the features of the dsPIC33CH128MP508 family of devices. It is not intended to be a comprehensive reference source. To complement the information in this data sheet, refer to **"Timer1 Module"** (DS70005279) in the *"dsPIC33/PIC24 Family Reference Manual"*, which is available from the Microchip web site (www.microchip.com).

2: The timer is identical for both Master core and Slave core. The x is common for both Master core and Slave core (where the x represents the number of the specific module being addressed).

3: All associated register names are the same on the Master core and the Slave core. The Slave code will be developed in a separate project in MPLAB® X IDE with the device selection, dsPIC33CH128MP508**S1**, where **S1** indicates the Slave device.

The Timer1 module is a 16-bit timer that can operate as a free-running interval timer/counter.

The Timer1 module has the following unique features over other timers:

- Can be Operated in Asynchronous Counter mode
- Asynchronous Timer
- Operational during CPU Sleep mode
- Software Selectable Prescalers 1:1, 1:8, 1:64 and 1:256
- External Clock Selection Control
- The Timer1 External Clock Input (T1CK) can Optionally be Synchronized to the Internal Device Clock and the Clock Synchronization is Performed after the Prescaler

If Timer1 is used for SCCP, the timer should be running in Synchronous mode.

The Timer1 module can operate in one of the following modes:

- Timer mode
- Gated Timer mode
- Synchronous Counter mode
- Asynchronous Counter mode

Table 17-1 shows an overview of the Timer1 module.

TABLE 17-1: TIMER1 MODULE OVERVIEW

	Number of Timer1 Modules	Identical (Modules)
Master Core	1	Yes
Slave Core	1	Yes

A block diagram of Timer1 is shown in Figure 17-1.

FIGURE 17-1: 16-BIT TIMER1 MODULE BLOCK DIAGRAM

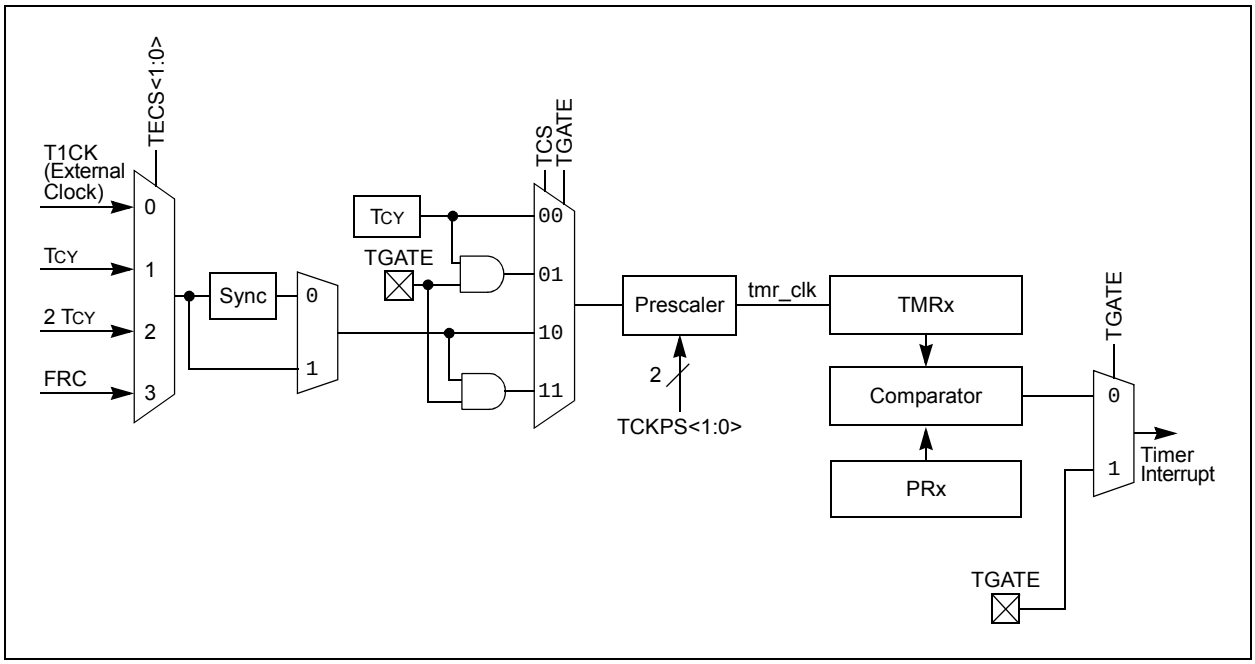

17.1 Timer1 Control Register

REGISTER 17-1: T1CON: TIMER1 CONTROL REGISTER

R/W-0	U-0	R/W-0	R/W-0	R-0	R-0	R/W-0	R/W-0
TON(1)	—	SIDL	TMWDIS	TMWIP	PRWIP	TECS1	TECS0
bit 15							bit 8

R/W-0	U-0	R/W-0	R/W-0	U-0	R/W-0	R/W-0	U-0
TGATE	—	TCKPS1	TCKPS0	—	TSYNC(1)	TCS(1)	—
bit 7							bit 0

Legend:			
R = Readable bit	W = Writable bit	U = Unimplemented bit, read as ‘0’	
-n = Value at POR	‘1’ = Bit is set	‘0’ = Bit is cleared	x = Bit is unknown

bit 15 **TON:** Timer1 On bit(1)
1 = Starts 16-bit Timer1
0 = Stops 16-bit Timer1

bit 14 **Unimplemented:** Read as ‘0’

bit 13 **SIDL:** Timer1 Stop in Idle Mode bit
1 = Discontinues module operation when device enters Idle mode
0 = Continues module operation in Idle mode

bit 12 **TMWDIS:** Asynchronous Timer1 Write Disable bit
1 = Timer writes are ignored while a posted write to TMR1 or PR1 is synchronized to the asynchronous clock domain
0 = Back-to-back writes are enabled in Asynchronous mode

bit 11 **TMWIP:** Asynchronous Timer1 Write in Progress bit
1 = Write to the timer in Asynchronous mode is pending
0 = Write to the timer in Asynchronous mode is complete

bit 10 **PRWIP:** Asynchronous Period Write in Progress bit
1 = Write to the Period register in Asynchronous mode is pending
0 = Write to the Period register in Asynchronous mode is complete

bit 9-8 **TECS<1:0>:** Timer1 Extended Clock Select bits
11 = FRC clock
10 = 2 TCY
01 = TCY
00 = External Clock comes from the T1CK pin

bit 7 **TGATE:** Timer1 Gated Time Accumulation Enable bit
When TCS = 1:
This bit is ignored.
When TCS = 0:
1 = Gated time accumulation is enabled
0 = Gated time accumulation is disabled

bit 6 **Unimplemented:** Read as ‘0’

Note 1: When Timer1 is enabled in External Synchronous Counter mode (TCS = 1, TSYNC = 1, TON = 1), any attempts by user software to write to the TMR1 register are ignored.

© 2017-2018 Microchip Technology Inc.

REGISTER 17-1: T1CON: TIMER1 CONTROL REGISTER (CONTINUED)

bit 5-4	**TCKPS<1:0>:** Timer1 Input Clock Prescale Select bits 11 = 1:256 10 = 1:64 01 = 1:8 00 = 1:1
bit 3	**Unimplemented:** Read as '0'
bit 2	**TSYNC:** Timer1 External Clock Input Synchronization Select bit(1) When TCS = 1: 1 = Synchronizes the External Clock input 0 = Does not synchronize the External Clock input When TCS = 0: This bit is ignored.
bit 1	**TCS:** Timer1 Clock Source Select bit(1) 1 = External Clock source selected by TECS<1:0> 0 = Internal peripheral clock (FP)
bit 0	**Unimplemented:** Read as '0'

Note 1: When Timer1 is enabled in External Synchronous Counter mode (TCS = 1, TSYNC = 1, TON = 1), any attempts by user software to write to the TMR1 register are ignored.

NOTES:

© 2017-2018 Microchip Technology Inc.

18.0 CONFIGURABLE LOGIC CELL (CLC)

Note 1: This data sheet summarizes the features of the dsPIC33CH128MP508 family of devices. It is not intended to be a comprehensive reference source. For more information, refer to **"Configurable Logic Cell (CLC)"** (DS70005298) in the *"dsPIC33/PIC24 Family Reference Manual"*, which is available from the Microchip web site (www.microchip.com). The information in this data sheet supersedes the information in the FRM.

2: The CLC is identical for both Master core and Slave core (where the x represents the number of the specific module being addressed in Master or Slave).

3: All associated register names are the same on the Master core and the Slave core. The Slave code will be developed in a separate project in MPLAB® X IDE with the device selection, dsPIC33CH128MP508**S1**, where the **S1** indicates the Slave device. The Master and Slave are CLC1 and CLC2.

The Configurable Logic Cell (CLC) module allows the user to specify combinations of signals as inputs to a logic function and to use the logic output to control other peripherals or I/O pins. This provides greater flexibility and potential in embedded designs, since the CLC module can operate outside the limitations of software execution, and supports a vast amount of output designs.

There are four input gates to the selected logic function. These four input gates select from a pool of up to 32 signals that are selected using four data source selection multiplexers. Table 18-1 shows an overview of the module.

TABLE 18-1: CLC MODULE OVERVIEW

	Number of CLC Modules	Identical (Modules)
Master	4	Yes
Slave	4	Yes

Figure 18-3 shows the details of the data source multiplexers and Figure 18-2 shows the logic input gate connections.

FIGURE 18-1: CLCx MODULE

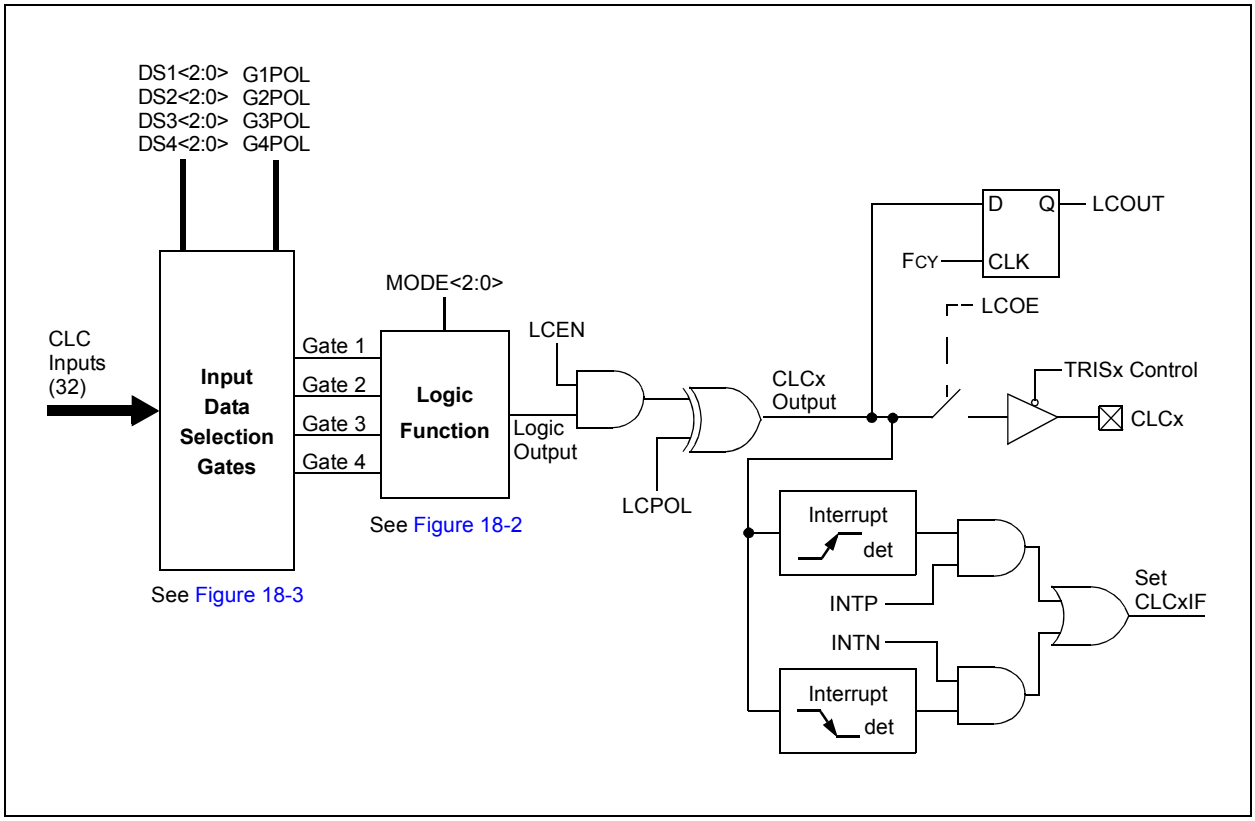

FIGURE 18-2: CLCx LOGIC FUNCTION COMBINATORIAL OPTIONS

AND – OR

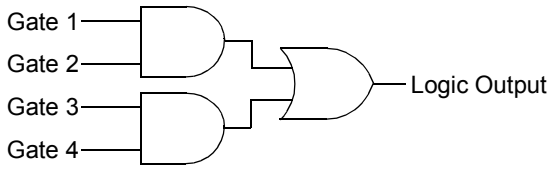

MODE<2:0> = 000

OR – XOR

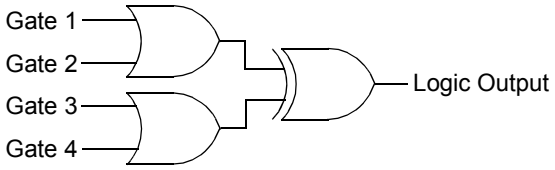

MODE<2:0> = 001

4-Input AND

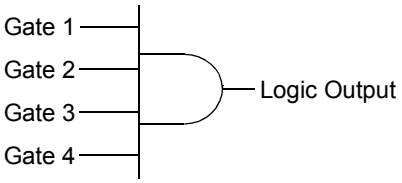

MODE<2:0> = 010

S-R Latch

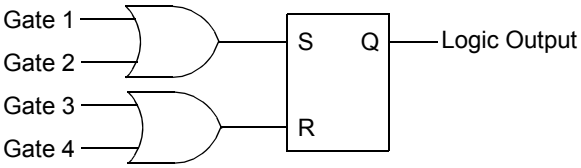

MODE<2:0> = 011

1-Input D Flip-Flop with S and R

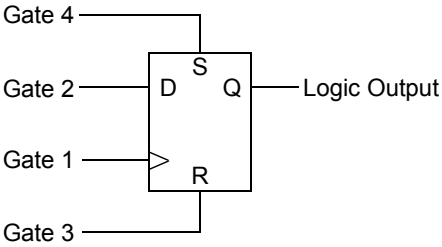

MODE<2:0> = 100

2-Input D Flip-Flop with R

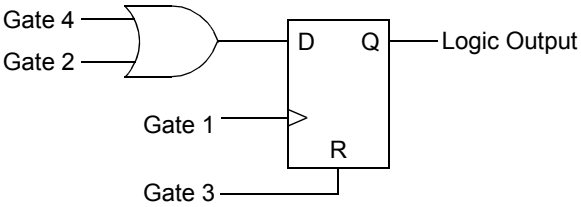

MODE<2:0> = 101

J-K Flip-Flop with R

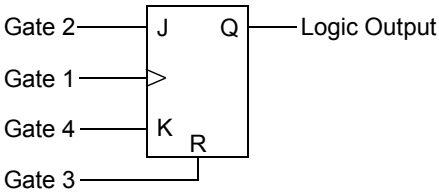

MODE<2:0> = 110

1-Input Transparent Latch with S and R

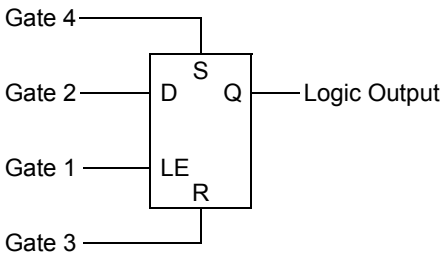

MODE<2:0> = 111

© 2017-2018 Microchip Technology Inc.

FIGURE 18-3: CLCx INPUT SOURCE SELECTION DIAGRAM

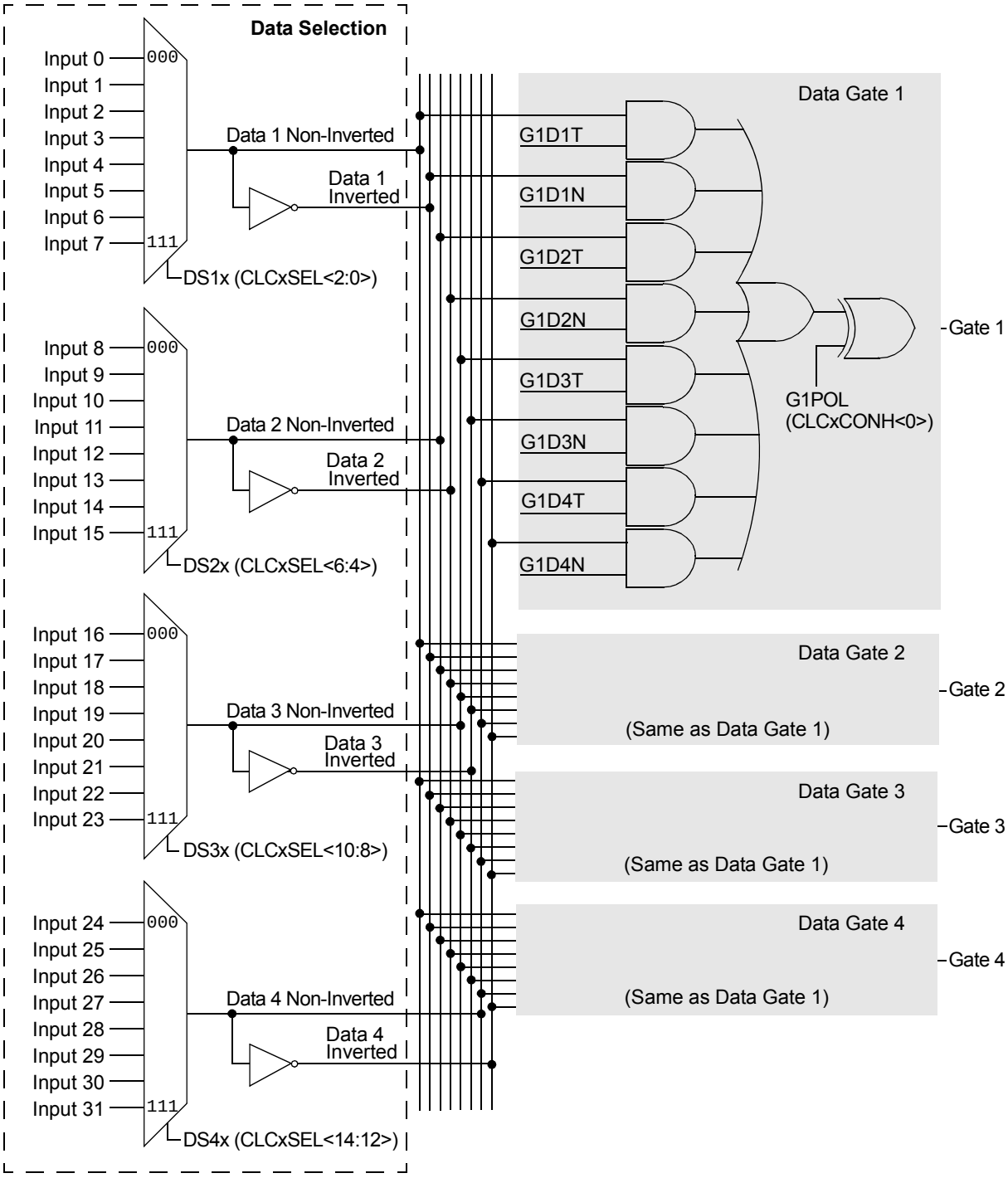

Note: All controls are undefined at power-up.

18.1 Control Registers

The CLCx module is controlled by the following registers:

- CLCxCONL
- CLCxCONH
- CLCxSEL
- CLCxGLSL
- CLCxGLSH

The CLCx Control registers (CLCxCONL and CLCxCONH) are used to enable the module and interrupts, control the output enable bit, select output polarity and select the logic function. The CLCx Control registers also allow the user to control the logic polarity of not only the cell output, but also some intermediate variables.

The CLCx Input MUX Select register (CLCxSEL) allows the user to select up to four data input sources using the four data input selection multiplexers. Each multiplexer has a list of eight data sources available.

The CLCx Gate Logic Input Select registers (CLCxGLSL and CLCxGLSH) allow the user to select which outputs from each of the selection MUXes are used as inputs to the input gates of the logic cell. Each data source MUX outputs both a true and a negated version of its output. All of these eight signals are enabled, ORed together by the logic cell input gates.

REGISTER 18-1: CLCxCONL: CLCx CONTROL REGISTER (LOW)

R/W-0	U-0	U-0	U-0	R/W-0	R/W-0	U-0	U-0
LCEN	—	—	—	INTP	INTN	—	—
bit 15							bit 8

R-0	R-0	R/W-0	U-0	U-0	R/W-0	R/W-0	R/W-0
LCOE	LCOUT	LCPOL	—	—	MODE2	MODE1	MODE0
bit 7							bit 0

Legend:			
R = Readable bit	W = Writable bit	U = Unimplemented bit, read as ‘0’	
-n = Value at POR	‘1’ = Bit is set	‘0’ = Bit is cleared	x = Bit is unknown

bit 15 **LCEN:** CLCx Enable bit
`1` = CLCx is enabled and mixing input signals
`0` = CLCx is disabled and has logic zero outputs

bit 14-12 **Unimplemented:** Read as ‘`0`’

bit 11 **INTP:** CLCx Positive Edge Interrupt Enable bit
`1` = Interrupt will be generated when a rising edge occurs on LCOUT
`0` = Interrupt will not be generated

bit 10 **INTN:** CLCx Negative Edge Interrupt Enable bit
`1` = Interrupt will be generated when a falling edge occurs on LCOUT
`0` = Interrupt will not be generated

bit 9-8 **Unimplemented:** Read as ‘`0`’

bit 7 **LCOE:** CLCx Port Enable bit
`1` = CLCx port pin output is enabled
`0` = CLCx port pin output is disabled

bit 6 **LCOUT:** CLCx Data Output Status bit
`1` = CLCx output high
`0` = CLCx output low

bit 5 **LCPOL:** CLCx Output Polarity Control bit
`1` = The output of the module is inverted
`0` = The output of the module is not inverted

bit 4-3 **Unimplemented:** Read as ‘`0`’

© 2017-2018 Microchip Technology Inc.

REGISTER 18-1: CLCxCONL: CLCx CONTROL REGISTER (LOW) (CONTINUED)

bit 2-0 **MODE<2:0>:** CLCx Mode bits
111 = Single input transparent latch with S and R
110 = JK flip-flop with R
101 = Two-input D flip-flop with R
100 = Single input D flip-flop with S and R
011 = SR latch
010 = Four-input AND
001 = Four-input OR-XOR
000 = Four-input AND-OR

REGISTER 18-2: CLCxCONH: CLCx CONTROL REGISTER (HIGH)

U-0	U-0	U-0	U-0	U-0	U-0	U-0	U-0
—	—	—	—	—	—	—	—
bit 15							bit 8

U-0	U-0	U-0	U-0	R/W-0	R/W-0	R/W-0	R/W-0
—	—	—	—	G4POL	G3POL	G2POL	G1POL
bit 7							bit 0

Legend:			
R = Readable bit	W = Writable bit	U = Unimplemented bit, read as ‘0’	
-n = Value at POR	‘1’ = Bit is set	‘0’ = Bit is cleared	x = Bit is unknown

bit 15-4 **Unimplemented:** Read as ‘0’

bit 3 **G4POL:** Gate 4 Polarity Control bit
1 = Channel 4 logic output is inverted when applied to the logic cell
0 = Channel 4 logic output is not inverted

bit 2 **G3POL:** Gate 3 Polarity Control bit
1 = Channel 3 logic output is inverted when applied to the logic cell
0 = Channel 3 logic output is not inverted

bit 1 **G2POL:** Gate 2 Polarity Control bit
1 = Channel 2 logic output is inverted when applied to the logic cell
0 = Channel 2 logic output is not inverted

bit 0 **G1POL:** Gate 1 Polarity Control bit
1 = Channel 1 logic output is inverted when applied to the logic cell
0 = Channel 1 logic output is not inverted

REGISTER 18-3: CLCxSEL: CLCx INPUT MUX SELECT REGISTER

U-0	R/W-0	R/W-0	R/W-0	U-0	R/W-0	R/W-0	R/W-0
—	DS4<2:0>			—	DS3<2:0>		
bit 15							bit 8

U-0	R/W-0	R/W-0	R/W-0	U-0	R/W-0	R/W-0	R/W-0
—	DS2<2:0>			—	DS1<2:0>		
bit 7							bit 0

Legend:			
R = Readable bit	W = Writable bit	U = Unimplemented bit, read as ‘0’	
-n = Value at POR	‘1’ = Bit is set	‘0’ = Bit is cleared	x = Bit is unknown

bit 15 **Unimplemented:** Read as ‘0’

bit 14-12 **DS4<2:0>:** Data Selection MUX 4 Signal Selection bits (Master)

111 = Master SCCP3 auxiliary out
110 = Master SCCP1 auxiliary out
101 = CLCIND RP pin
100 = Reserved
011 = Master SPI1 Input (SDIx)(1)
010 = Slave Comparator 2 out
001 = Master CLC2 output
000 = Master PWM event

DS4<2:0>: Data Selection MUX 4 Signal Selection bits (Slave)

111 = Slave SCCP3 auxiliary out
110 = Slave SCCP1 auxiliary out
101 = Slave CLCIND
100 = Reserved
011 = Slave SPI1 Input (SDIx)(1)
010 = Slave Comparator 2 out
001 = Slave CLC2 out
000 = Slave PWM event

bit 11 **Unimplemented:** Read as ‘0’

bit 10-8 **DS3<2:0>:** Data Selection MUX 3 Signal Selection bits (Master)

111 = Master SCCP4 Compare Event Flag (CCP4IF)
110 = Master SCCP3 Compare Event Flag (CCP3IF)
101 = CLC4 out
100 = Master UART1 RX output corresponding to CLCx module
011 = Master SPI1 Output (SDOx) corresponding to CLCx module
010 = Slave Comparator 1 output
001 = Master CLC1 output
000 = Master CLCINC I/O pin

DS3<2:0>: Data Selection MUX 3 Signal Selection bits (Slave)

111 = Slave SCCP4 Compare Event Flag (CCP4IF)
110 = Slave SCCP3 Compare Event Flag (CCP3IF)
101 = Slave CLC4 out
100 = Slave UART1 RX output corresponding to CLCx module
011 = Slave SPI1 Output (SDOx) corresponding to CLCx module
010 = Slave Comparator 1 output
001 = Slave CLC1 output
000 = Slave CLCINC I/O pin

Note 1: Valid only for the SPI with PPS selection.

© 2017-2018 Microchip Technology Inc.

REGISTER 18-3: CLCxSEL: CLCx INPUT MUX SELECT REGISTER (CONTINUED)

bit 7 **Unimplemented:** Read as '0'

bit 6-4 **DS2<2:0>:** Data Selection MUX 2 Signal Selection bits (Master)

111 = Master SCCP2 OC (CCP2IF) out
110 = Master SCCP1 OC (CCP1IF) out
101 = Reserved
100 = Reserved
011 = Master UART1 TX input corresponding to CLCx module
010 = Master Comparator 1 output
001 = Slave CLC2 output
000 = Master CLCINB I/O pin

DS2<2:0>: Data Selection MUX 2 Signal Selection bits (Slave)

111 = Slave SCCP2 OC (CCP2IF) out
110 = Slave SCCP1 OC (CCP1IF) out
101 = Reserved
100 = Reserved
011 = Slave UART1 TX input corresponding to CLCx module
010 = Master Comparator 1 output
001 = Master CLC2 output
000 = Slave CLCINB I/O pin

bit 3 **Unimplemented:** Read as '0'

bit 2-0 **DS1<2:0>:** Data Selection MUX 1 Signal Selection bits (Master)

111 = Master SCCP4 auxiliary out
110 = Master SCCP2 auxiliary out
101 = Slave Comparator 3
100 = Master REFCLKO output
011 = Master INTRC/LPRC clock source
010 = CLC3 out
001 = Master system clock (FCY)
000 = Master CLCINA I/O pin

DS1<2:0>: Data Selection MUX 1 Signal Selection bits (Slave)

111 = Slave SCCP4 auxiliary out
110 = Slave SCCP2 auxiliary out
101 = Slave Comparator 3
100 = Slave REFCLKO output
011 = Slave INTRC/LPRC clock source
010 = Slave CLC3 out
001 = Slave system clock (FCY)
000 = Slave CLCINA I/O pin

Note 1: Valid only for the SPI with PPS selection.

REGISTER 18-4: CLCxGLSL: CLCx GATE LOGIC INPUT SELECT LOW REGISTER

R/W-0	R/W-0	R/W-0	R/W-0	R/W-0	R/W-0	R/W-0	R/W-0
G2D4T	G2D4N	G2D3T	G2D3N	G2D2T	G2D2N	G2D1T	G2D1N
bit 15							bit 8

R/W-0	R/W-0	R/W-0	R/W-0	R/W-0	R/W-0	R/W-0	R/W-0
G1D4T	G1D4N	G1D3T	G1D3N	G1D2T	G1D2N	G1D1T	G1D1N
bit 7							bit 0

Legend:			
R = Readable bit	W = Writable bit	U = Unimplemented bit, read as ‘0’	
-n = Value at POR	‘1’ = Bit is set	‘0’ = Bit is cleared	x = Bit is unknown

bit 15 **G2D4T:** Gate 2 Data Source 4 True Enable bit
1 = Data Source 4 signal is enabled for Gate 2
0 = Data Source 4 signal is disabled for Gate 2

bit 14 **G2D4N:** Gate 2 Data Source 4 Negated Enable bit
1 = Data Source 4 inverted signal is enabled for Gate 2
0 = Data Source 4 inverted signal is disabled for Gate 2

bit 13 **G2D3T:** Gate 2 Data Source 3 True Enable bit
1 = Data Source 3 signal is enabled for Gate 2
0 = Data Source 3 signal is disabled for Gate 2

bit 12 **G2D3N:** Gate 2 Data Source 3 Negated Enable bit
1 = Data Source 3 inverted signal is enabled for Gate 2
0 = Data Source 3 inverted signal is disabled for Gate 2

bit 11 **G2D2T:** Gate 2 Data Source 2 True Enable bit
1 = Data Source 2 signal is enabled for Gate 2
0 = Data Source 2 signal is disabled for Gate 2

bit 10 **G2D2N:** Gate 2 Data Source 2 Negated Enable bit
1 = Data Source 2 inverted signal is enabled for Gate 2
0 = Data Source 2 inverted signal is disabled for Gate 2

bit 9 **G2D1T:** Gate 2 Data Source 1 True Enable bit
1 = Data Source 1 signal is enabled for Gate 2
0 = Data Source 1 signal is disabled for Gate 2

bit 8 **G2D1N:** Gate 2 Data Source 1 Negated Enable bit
1 = Data Source 1 inverted signal is enabled for Gate 2
0 = Data Source 1 inverted signal is disabled for Gate 2

bit 7 **G1D4T:** Gate 1 Data Source 4 True Enable bit
1 = Data Source 4 signal is enabled for Gate 1
0 = Data Source 4 signal is disabled for Gate 1

bit 6 **G1D4N:** Gate 1 Data Source 4 Negated Enable bit
1 = Data Source 4 inverted signal is enabled for Gate 1
0 = Data Source 4 inverted signal is disabled for Gate 1

bit 5 **G1D3T:** Gate 1 Data Source 3 True Enable bit
1 = Data Source 3 signal is enabled for Gate 1
0 = Data Source 3 signal is disabled for Gate 1

bit 4 **G1D3N:** Gate 1 Data Source 3 Negated Enable bit
1 = Data Source 3 inverted signal is enabled for Gate 1
0 = Data Source 3 inverted signal is disabled for Gate 1

© 2017-2018 Microchip Technology Inc.

REGISTER 18-4: CLCxGLSL: CLCx GATE LOGIC INPUT SELECT LOW REGISTER (CONTINUED)

bit 3 **G1D2T:** Gate 1 Data Source 2 True Enable bit
1 = Data Source 2 signal is enabled for Gate 1
0 = Data Source 2 signal is disabled for Gate 1

bit 2 **G1D2N:** Gate 1 Data Source 2 Negated Enable bit
1 = Data Source 2 inverted signal is enabled for Gate 1
0 = Data Source 2 inverted signal is disabled for Gate 1

bit 1 **G1D1T:** Gate 1 Data Source 1 True Enable bit
1 = Data Source 1 signal is enabled for Gate 1
0 = Data Source 1 signal is disabled for Gate 1

bit 0 **G1D1N:** Gate 1 Data Source 1 Negated Enable bit
1 = Data Source 1 inverted signal is enabled for Gate 1
0 = Data Source 1 inverted signal is disabled for Gate 1

REGISTER 18-5: CLCxGLSH: CLCx GATE LOGIC INPUT SELECT HIGH REGISTER

R/W-0	R/W-0	R/W-0	R/W-0	R/W-0	R/W-0	R/W-0	R/W-0
G4D4T	G4D4N	G4D3T	G4D3N	G4D2T	G4D2N	G4D1T	G4D1N
bit 15							bit 8

R/W-0	R/W-0	R/W-0	R/W-0	R/W-0	R/W-0	R/W-0	R/W-0
G3D4T	G3D4N	G3D3T	G3D3N	G3D2T	G3D2N	G3D1T	G3D1N
bit 7							bit 0

Legend:			
R = Readable bit	W = Writable bit	U = Unimplemented bit, read as ‘0’	
-n = Value at POR	‘1’ = Bit is set	‘0’ = Bit is cleared	x = Bit is unknown

bit 15 **G4D4T:** Gate 4 Data Source 4 True Enable bit
`1` = Data Source 4 signal is enabled for Gate 4
`0` = Data Source 4 signal is disabled for Gate 4

bit 14 **G4D4N:** Gate 4 Data Source 4 Negated Enable bit
`1` = Data Source 4 inverted signal is enabled for Gate 4
`0` = Data Source 4 inverted signal is disabled for Gate 4

bit 13 **G4D3T:** Gate 4 Data Source 3 True Enable bit
`1` = Data Source 3 signal is enabled for Gate 4
`0` = Data Source 3 signal is disabled for Gate 4

bit 12 **G4D3N:** Gate 4 Data Source 3 Negated Enable bit
`1` = Data Source 3 inverted signal is enabled for Gate 4
`0` = Data Source 3 inverted signal is disabled for Gate 4

bit 11 **G4D2T:** Gate 4 Data Source 2 True Enable bit
`1` = Data Source 2 signal is enabled for Gate 4
`0` = Data Source 2 signal is disabled for Gate 4

bit 10 **G4D2N:** Gate 4 Data Source 2 Negated Enable bit
`1` = Data Source 2 inverted signal is enabled for Gate 4
`0` = Data Source 2 inverted signal is disabled for Gate 4

bit 9 **G4D1T:** Gate 4 Data Source 1 True Enable bit
`1` = Data Source 1 signal is enabled for Gate 4
`0` = Data Source 1 signal is disabled for Gate 4

bit 8 **G4D1N:** Gate 4 Data Source 1 Negated Enable bit
`1` = Data Source 1 inverted signal is enabled for Gate 4
`0` = Data Source 1 inverted signal is disabled for Gate 4

bit 7 **G3D4T:** Gate 3 Data Source 4 True Enable bit
`1` = Data Source 4 signal is enabled for Gate 3
`0` = Data Source 4 signal is disabled for Gate 3

bit 6 **G3D4N:** Gate 3 Data Source 4 Negated Enable bit
`1` = Data Source 4 inverted signal is enabled for Gate 3
`0` = Data Source 4 inverted signal is disabled for Gate 3

bit 5 **G3D3T:** Gate 3 Data Source 3 True Enable bit
`1` = Data Source 3 signal is enabled for Gate 3
`0` = Data Source 3 signal is disabled for Gate 3

bit 4 **G3D3N:** Gate 3 Data Source 3 Negated Enable bit
`1` = Data Source 3 inverted signal is enabled for Gate 3
`0` = Data Source 3 inverted signal is disabled for Gate 3

© 2017-2018 Microchip Technology Inc.

REGISTER 18-5: CLCxGLSH: CLCx GATE LOGIC INPUT SELECT HIGH REGISTER (CONTINUED)

bit 3 **G3D2T:** Gate 3 Data Source 2 True Enable bit
1 = Data Source 2 signal is enabled for Gate 3
0 = Data Source 2 signal is disabled for Gate 3

bit 2 **G3D2N:** Gate 3 Data Source 2 Negated Enable bit
1 = Data Source 2 inverted signal is enabled for Gate 3
0 = Data Source 2 inverted signal is disabled for Gate 3

bit 1 **G3D1T:** Gate 3 Data Source 1 True Enable bit
1 = Data Source 1 signal is enabled for Gate 3
0 = Data Source 1 signal is disabled for Gate 3

bit 0 **G3D1N:** Gate 3 Data Source 1 Negated Enable bit
1 = Data Source 1 inverted signal is enabled for Gate 3
0 = Data Source 1 inverted signal is disabled for Gate 3

NOTES:

© 2017-2018 Microchip Technology Inc.

19.0 32-BIT PROGRAMMABLE CYCLIC REDUNDANCY CHECK (CRC) GENERATOR

Note 1: This data sheet summarizes the features of the dsPIC33CH128MP508 family of devices. It is not intended to be a comprehensive reference source. For more information, refer to **"32-Bit Programmable Cyclic Redundancy Check (CRC)"** (DS30009729) in the *"dsPIC33/PIC24 Family Reference Manual"*, which is available from the Microchip web site (www.microchip.com).

2: The CRC module is available only on the Master.

The 32-bit programmable CRC generator provides a hardware implemented method of quickly generating checksums for various networking and security applications. It offers the following features:

- User-Programmable CRC Polynomial Equation, up to 32 Bits
- Programmable Shift Direction (little or big-endian)
- Independent Data and Polynomial Lengths
- Configurable Interrupt Output
- Data FIFO

A simple version of the CRC shift engine is displayed in Figure 19-1. Table 19-1 displays a simplified block diagram of the CRC generator.

TABLE 19-1: CRC MODULE OVERVIEW

	Number of CRC Modules	Identical (Modules)
Master Core	1	Yes
Slave Core	None	NA

FIGURE 19-1: CRC MODULE BLOCK DIAGRAM

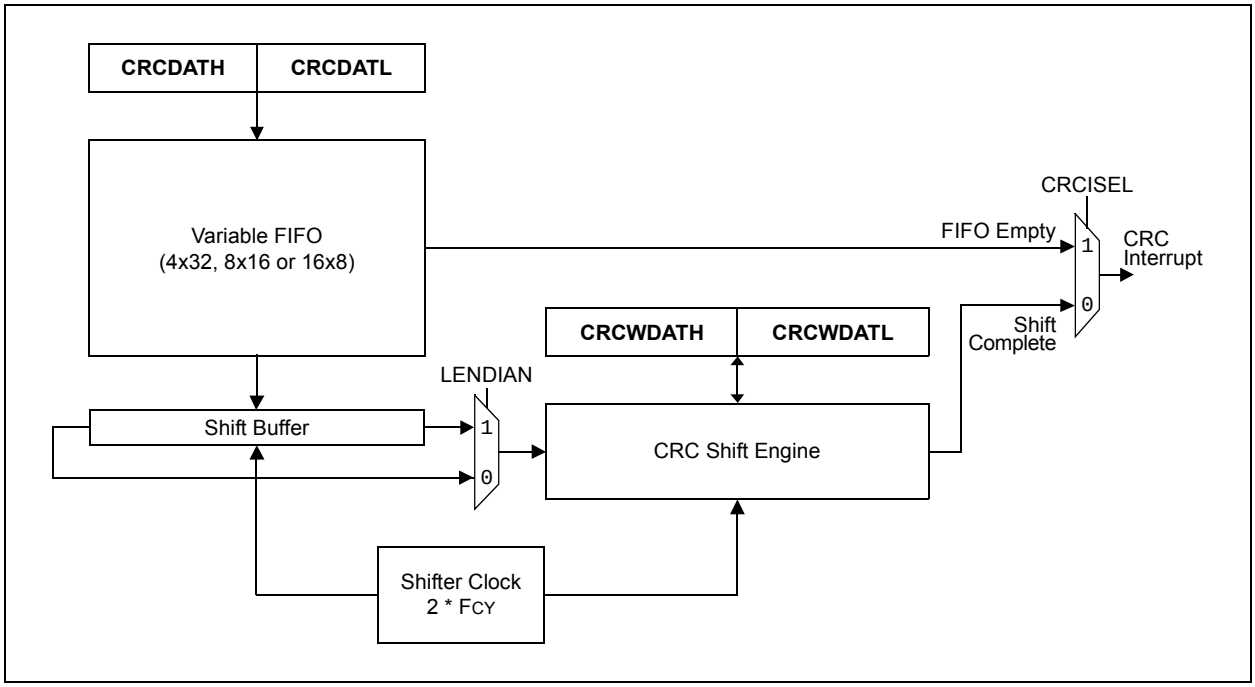

19.1 CRC Control Registers

REGISTER 19-1: CRCCONL: CRC CONTROL REGISTER LOW

R/W-0	U-0	R/W-0	HSC/R-0	HSC/R-0	HSC/R-0	HSC/R-0	HSC/R-0
CRCEN	—	CSIDL	VWORD4	VWORD3	VWORD2	VWORD1	VWORD0
bit 15							bit 8

HSC/R-0	HSC/R-1	R/W-0	HC/R/W-0	R/W-0	R/W-0	U-0	U-0
CRCFUL	CRCMPT	CRCISEL	CRCGO	LENDIAN	MOD	—	—
bit 7							bit 0

Legend:	HC = Hardware Clearable bit	HSC = Hardware Settable/Clearable bit	
R = Readable bit	W = Writable bit	U = Unimplemented bit, read as ‘0’	
-n = Value at POR	‘1’ = Bit is set	‘0’ = Bit is cleared	x = Bit is unknown

bit 15 **CRCEN:** CRC Enable bit
1 = Enables module
0 = Disables module

bit 14 **Unimplemented:** Read as ‘0’

bit 13 **CSIDL:** CRC Stop in Idle Mode bit
1 = Discontinues module operation when device enters Idle mode
0 = Continues module operation in Idle mode

bit 12-8 **VWORD<4:0>:** Pointer Value bits
Indicates the number of valid words in the FIFO. Has a maximum value of 8 when PLEN<4:0> ≥ 7 or 16 when PLEN<4:0> ≤ 7.

bit 7 **CRCFUL:** CRC FIFO Full bit
1 = FIFO is full
0 = FIFO is not full

bit 6 **CRCMPT:** CRC FIFO Empty bit
1 = FIFO is empty
0 = FIFO is not empty

bit 5 **CRCISEL:** CRC Interrupt Selection bit
1 = Interrupt on FIFO is empty; the final word of data is still shifting through the CRC
0 = Interrupt on shift is complete and results are ready

bit 4 **CRCGO:** CRC Start bit
1 = Starts CRC serial shifter
0 = CRC serial shifter is turned off

bit 3 **LENDIAN:** Data Shift Direction Select bit
1 = Data word is shifted into the FIFO, starting with the LSb (little-endian)
0 = Data word is shifted into the FIFO, starting with the MSb (big-endian)

bit 2 **MOD:** CRC Calculation Mode bit
1 = Alternate mode
0 = Legacy mode bit

bit 1-0 **Unimplemented:** Read as ‘0’

© 2017-2018 Microchip Technology Inc.

REGISTER 19-2: CRCCONH: CRC CONTROL REGISTER HIGH

U-0	U-0	U-0	R/W-0	R/W-0	R/W-0	R/W-0	R/W-0
—	—	—	DWIDTH4	DWIDTH3	DWIDTH2	DWIDTH1	DWIDTH0
bit 15							bit 8

U-0	U-0	U-0	R/W-0	R/W-0	R/W-0	R/W-0	R/W-0
—	—	—	PLEN4	PLEN3	PLEN2	PLEN1	PLEN0
bit 7							bit 0

Legend:			
R = Readable bit	W = Writable bit	U = Unimplemented bit, read as ‘0’	
-n = Value at POR	‘1’ = Bit is set	‘0’ = Bit is cleared	x = Bit is unknown

bit 15-13 **Unimplemented:** Read as ‘0’

bit 12-8 **DWIDTH<4:0>:** Data Word Width Configuration bits
Configures the width of the data word (Data Word Width – 1).

bit 7-5 **Unimplemented:** Read as ‘0’

bit 4-0 **PLEN<4:0>:** Polynomial Length Configuration bits
Configures the length of the polynomial (Polynomial Length – 1).

REGISTER 19-3: CRCXORL: CRC XOR POLYNOMIAL REGISTER, LOW BYTE

R/W-0	R/W-0	R/W-0	R/W-0	R/W-0	R/W-0	R/W-0	R/W-0
X<15:8>							
bit 15							bit 8

R/W-0	R/W-0	R/W-0	R/W-0	R/W-0	R/W-0	R/W-0	U-0
X<7:1>							—
bit 7							bit 0

Legend:			
R = Readable bit	W = Writable bit	U = Unimplemented bit, read as ‘0’	
-n = Value at POR	‘1’ = Bit is set	‘0’ = Bit is cleared	x = Bit is unknown

bit 15-1 **X<15:1>:** XOR of Polynomial Term x^n Enable bits

bit 0 **Unimplemented:** Read as ‘0’

REGISTER 19-4: CRCXORH: CRC XOR POLYNOMIAL REGISTER, HIGH BYTE

R/W-0	R/W-0	R/W-0	R/W-0	R/W-0	R/W-0	R/W-0	R/W-0
X<31:24>							
bit 15							bit 8

R/W-0	R/W-0	R/W-0	R/W-0	R/W-0	R/W-0	R/W-0	R/W-0
X<23:16>							
bit 7							bit 0

Legend:			
R = Readable bit	W = Writable bit	U = Unimplemented bit, read as ‘0’	
-n = Value at POR	‘1’ = Bit is set	‘0’ = Bit is cleared	x = Bit is unknown

bit 15-0 **X<31:16>:** XOR of Polynomial Term x^n Enable bits

© 2017-2018 Microchip Technology Inc.

20.0 CURRENT BIAS GENERATOR (CBG)

Note 1: This data sheet summarizes the features of the dsPIC33CH128MP508 family of devices. It is not intended to be a comprehensive reference source. To complement the information in this data sheet, refer to **"Current Bias Generator (CBG)"** (DS70005253) in the *"dsPIC33/PIC24 Family Reference Manual"*, which is available from the Microchip web site (www.microchip.com).

2: Some registers and associated bits described in this section may not be available on all devices. Refer to **Section 3.2 "Master Memory Organization"** in this data sheet for device-specific register and bit information.

The Current Bias Generator (CBG) consists of two classes of current sources: 10 µA and 50 µA sources. The major features of each current source are:

- 10 µA Current Sources:
  - Current sourcing only
  - Up to four independent sources
- 50 µA Current Sources:
  - Selectable current sourcing or sinking
  - Selectable current mirroring for sourcing and sinking

A simplified block diagram of the CBG module is shown in Figure 20-1.

FIGURE 20-1: CONSTANT-CURRENT SOURCE MODULE BLOCK DIAGRAM(2)

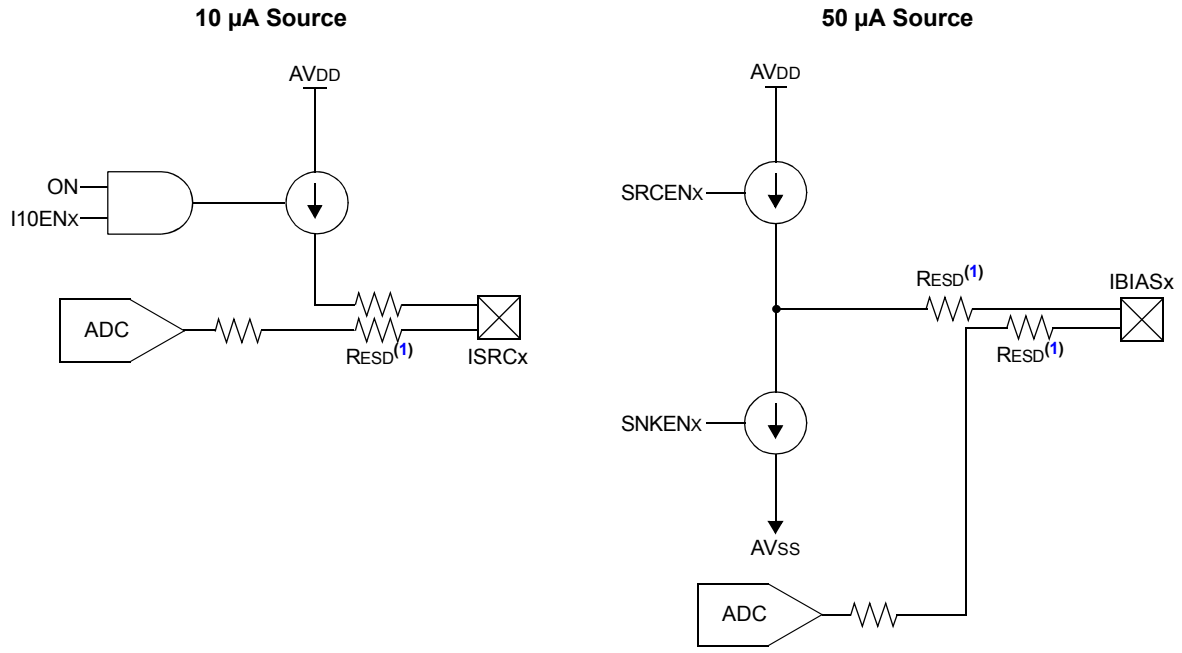

Note 1: RESD is typically 300 Ohms; for more information, refer to the device data sheet.

2: In Figure 20-1 only, the ADC analog input is shown for clarity. Each analog peripheral connected to the pin has a separate Electrostatic Discharge (ESD) resistor.

20.1 Current Bias Generator Control Registers

REGISTER 20-1: BIASCON: CURRENT BIAS GENERATOR CONTROL REGISTER

R/W-0	U-0	U-0	U-0	U-0	U-0	U-0	U-0
ON	—	—	—	—	—	—	—
bit 15							bit 8

U-0	U-0	U-0	U-0	R/W-0	R/W-0	R/W-0	R/W-0
—	—	—	—	I10EN3	I10EN2	I10EN1	I10EN0
bit 7							bit 0

Legend:			
R = Readable bit	W = Writable bit	U = Unimplemented bit, read as ‘0’	
-n = Value at POR	‘1’ = Bit is set	‘0’ = Bit is cleared	x = Bit is unknown

bit 15 **ON:** Current Bias Module Enable bit
1 = Module is enabled
0 = Module is disabled

bit 14-4 **Unimplemented:** Read as ‘0’

bit 3 **I10EN3:** 10 µA Enable for Output 3 bit
1 = 10 µA output is enabled
0 = 10 µA output is disabled

bit 2 **I10EN2:** 10 µA Enable for Output 2 bit
1 = 10 µA output is enabled
0 = 10 µA output is disabled

bit 1 **I10EN1:** 10 µA Enable for Output 1 bit
1 = 10 µA output is enabled
0 = 10 µA output is disabled

bit 0 **I10EN0:** 10 µA Enable for Output 0 bit
1 = 10 µA output is enabled
0 = 10 µA output is disabled

© 2017-2018 Microchip Technology Inc.

REGISTER 20-2: IBIASCONH: CURRENT BIAS GENERATOR 50 µA CURRENT SOURCE CONTROL HIGH REGISTER

U-0	U-0	R/W-0	R/W-0	R/W-0	R/W-0	R/W-0	R/W-0
—	—	SHRSRCEN3	SHRSNKEN3	GENSRCEN3	GENSNKEN3	SRCEN3	SNKEN3
bit 15							bit 8

U-0	U-0	R/W-0	R/W-0	R/W-0	R/W-0	R/W-0	R/W-0
—	—	SHRSRCEN2	SHRSNKEN2	GENSRCEN2	GENSNKEN2	SRCEN2	SNKEN2
bit 7							bit 0

Legend:			
R = Readable bit	W = Writable bit	U = Unimplemented bit, read as ‘0’	
-n = Value at POR	‘1’ = Bit is set	‘0’ = Bit is cleared	x = Bit is unknown

bit 15-14 **Unimplemented:** Read as ‘0’

bit 13 **SHRSRCEN3:** Share Source Enable for Output #3 bit
1 = Sourcing Current Mirror mode is enabled (uses reference from another source)
0 = Sourcing Current Mirror mode is disabled

bit 12 **SHRSNKEN3:** Share Sink Enable for Output #3 bit
1 = Sinking Current Mirror mode is enabled (uses reference from another source)
0 = Sinking Current Mirror mode is disabled

bit 11 **GENSRCEN3:** Generated Source Enable for Output #3 bit
1 = Source generates the current source mirror reference
0 = Source does not generate the current source mirror reference

bit 10 **GENSNKEN3:** Generated Sink Enable for Output #3 bit
1 = Source generates the current source mirror reference
0 = Source does not generate the current source mirror reference

bit 9 **SRCEN3:** Source Enable for Output #3 bit
1 = Current source is enabled
0 = Current source is disabled

bit 8 **SNKEN3:** Sink Enable for Output #3 bit
1 = Current sink is enabled
0 = Current sink is disabled

bit 7-6 **Unimplemented:** Read as ‘0’

bit 5 **SHRSRCEN2:** Share Source Enable for Output #2 bit
1 = Sourcing Current Mirror mode is enabled (uses reference from another source)
0 = Sourcing Current Mirror mode is disabled

bit 4 **SHRSNKEN2:** Share Sink Enable for Output #2 bit
1 = Sinking Current Mirror mode is enabled (uses reference from another source)
0 = Sinking Current Mirror mode is disabled

bit 3 **GENSRCEN2:** Generated Source Enable for Output #2 bit
1 = Source generates the current source mirror reference
0 = Source does not generate the current source mirror reference

bit 2 **GENSNKEN2:** Generated Sink Enable for Output #2 bit
1 = Source generates the current source mirror reference
0 = Source does not generate the current source mirror reference

bit 1 **SRCEN2:** Source Enable for Output #2 bit
1 = Current source is enabled
0 = Current source is disabled

bit 0 **SNKEN2:** Sink Enable for Output #2 bit
1 = Current sink is enabled
0 = Current sink is disabled

REGISTER 20-3: IBIASCONL: CURRENT BIAS GENERATOR 50 µA CURRENT SOURCE CONTROL LOW REGISTER

U-0	U-0	R/W-0	R/W-0	R/W-0	R/W-0	R/W-0	R/W-0
—	—	SHRSRCEN1	SHRSNKEN1	GENSRCEN1	GENSNKEN1	SRCEN1	SNKEN1
bit 15							bit 8

U-0	U-0	R/W-0	R/W-0	R/W-0	R/W-0	R/W-0	R/W-0
—	—	SHRSRCEN0	SHRSNKEN0	GENSRCEN0	GENSNKEN0	SRCEN0	SNKEN0
bit 7							bit 0

Legend:			
R = Readable bit	W = Writable bit	U = Unimplemented bit, read as ‘0’	
-n = Value at POR	‘1’ = Bit is set	‘0’ = Bit is cleared	x = Bit is unknown

bit 15-14 **Unimplemented:** Read as ‘0’

bit 13 **SHRSRCEN1:** Share Source Enable for Output #1 bit
1 = Sourcing Current Mirror mode is enabled (uses reference from another source)
0 = Sourcing Current Mirror mode is disabled

bit 12 **SHRSNKEN1:** Share Sink Enable for Output #1 bit
1 = Sinking Current Mirror mode is enabled (uses reference from another source)
0 = Sinking Current Mirror mode is disabled

bit 11 **GENSRCEN1:** Generated Source Enable for Output #1 bit
1 = Source generates the current source mirror reference
0 = Source does not generate the current source mirror reference

bit 10 **GENSNKEN1:** Generated Sink Enable for Output #1 bit
1 = Source generates the current source mirror reference
0 = Source does not generate the current source mirror reference

bit 9 **SRCEN1:** Source Enable for Output #1 bit
1 = Current source is enabled
0 = Current source is disabled

bit 8 **SNKEN1:** Sink Enable for Output #1 bit
1 = Current sink is enabled
0 = Current sink is disabled

bit 7-6 **Unimplemented:** Read as ‘0’

bit 5 **SHRSRCEN0:** Share Source Enable for Output #0 bit
1 = Sourcing Current Mirror mode is enabled (uses reference from another source)
0 = Sourcing Current Mirror mode is disabled

bit 4 **SHRSNKEN0:** Share Sink Enable for Output #0 bit
1 = Sinking Current Mirror mode is enabled (uses reference from another source)
0 = Sinking Current Mirror mode is disabled

bit 3 **GENSRCEN0:** Generated Source Enable for Output #0 bit
1 = Source generates the current source mirror reference
0 = Source does not generate the current source mirror reference

bit 2 **GENSNKEN0:** Generated Sink Enable for Output #0 bit
1 = Source generates the current source mirror reference
0 = Source does not generate the current source mirror reference

bit 1 **SRCEN0:** Source Enable for Output #0 bit
1 = Current source is enabled
0 = Current source is disabled

bit 0 **SNKEN0:** Sink Enable for Output #0 bit
1 = Current sink is enabled
0 = Current sink is disabled

© 2017-2018 Microchip Technology Inc.

21.0 SPECIAL FEATURES

Note: This data sheet summarizes the features of the dsPIC33CH128MP508 family of devices. It is not intended to be a comprehensive reference source. To complement the information in this data sheet, refer to the related section of the *"dsPIC33/PIC24 Family Reference Manual"*, which is available from the Microchip web site (www.microchip.com).

The dsPIC33CH128MP508 family devices include several features intended to maximize application flexibility and reliability, and minimize cost through elimination of external components. These are:

- Flexible Configuration
- Watchdog Timer (WDT)
- Code Protection and CodeGuard™ Security
- JTAG Boundary Scan Interface
- In-Circuit Serial Programming™ (ICSP™)
- In-Circuit Emulation
- Brown-out Reset (BOR)

21.1 Configuration Bits

In dsPIC33CH128MP508 family devices, the Configuration Words are implemented as volatile memory. This means that configuration data will get loaded to volatile memory (from the Flash Configuration Words) each time the device is powered up. Configuration data is stored at the end of the on-chip program memory space, known as the Flash Configuration Words. Their specific locations are shown in Table 21-1. The configuration data is automatically loaded from the Flash Configuration Words to the proper Configuration Shadow registers during device Resets.

Note: Configuration data is reloaded on all types of device Master Resets. Slave Resets do not load the Configuration registers. It is recommended not to change the Slave Configuration register without resetting the Slave along with the Master (S1MSRE = 1).

When creating applications for these devices, users should always specifically allocate the location of the Flash Configuration Words for configuration data in their code for the compiler. This is to make certain that program code is not stored in this address when the code is compiled. Program code executing out of configuration space will cause a device Reset. The Master code, as well as the Slave code, are located in Flash memory. Table 21-1 shows the Master and the Slave Configuration registers and their address locations in Flash memory.

Slave Configuration bits are located in the Master Flash and loaded during a Master Reset.

Note: Performing a page erase operation on the last page of program memory clears the Flash Configuration Words.

TABLE 21-1: CONFIGURATION WORD ADDRESSES

Register	64k Address	128k Address
Master/General Configuration Registers		
FSEC	00AF00	015F00
FBSLIM	00AF10	015F10
FSIGN	00AF14	015F14
FOSCSEL	00AF18	015F18
FOSC	00AF1C	015F1C
FWDT	00AF20	015F20
FPOR	00AF24	015F24
FICD	00AF28	015F28
FDMTIVTL	00AF2C	015F2C
FDMTIVTH	00AF30	015F30
FDMTCNTL	00AF34	015F34
FDMTCNTH	00AF38	015F38
FDMT	00AF3C	015F3C
FDEVOPT	00AF40	015F40
FALTREG	00AF44	015F44
FMBXM	00AF48	015F48
FMBXHS1	00AFC4	015F4C
FMBXHS2	00AF50	015F50
FMBXHSEN	00AF54	015F54
FCFGPRA0	00AF58	015F58
FCFGPRB0	00AF60	015F60
FCFGPRC0	00AF68	015F68
FCFGPRD0	00AF70	015F70
FCFGPRE0	00AF78	015F7C
Slave Configuration Registers		
FS1OSCSEL	00AF80	015F80
FS1OSC	00AF84	015F84
FS1WDT	00AF88	015F88
FS1POR	00AF8C	015F8C
FS1ICD	00AF90	015F90
FS1DEVOPT	00AF94	015F94
FS1ALTREG	00AF98	015F98

TABLE 21-2: MASTER CONFIGURATION REGISTERS MAP

Register Name	Bits 23-16	Bit 15	Bit 14	Bit 13	Bit 12	Bit 11	Bit 10	Bit 9	Bit 8	Bit 7	Bit 6	Bit 5	Bit 4	Bit 3	Bit 2	Bit 1	Bit 0
FSEC	—	AIVTDIS	—	—	—	CSS2	CSS1	CSS0	CWRP	GSS1	GSS0	GWRP	—	BSEN	BSS1	BSS0	BWRP
FBSLIM	—	—	—	—	BSLIM<12:0>												
FSIGN	—	r(2)	—	—	—	—	—	—	—	—	—	—	—	—	—	—	—
FOSCSEL	—	—	—	—	—	—	—	—	—	IESO	—	—	—	—	FNOSC2	FNOSC1	FNOSC0
FOSC	—	—	—	—	XTBST	XTCFG1	XTCFG0	—	r(1)	FCKSM1	FCKSM0	—	—	—	OSCIOFNC	POSCMD1	POSCMD0
FWDT	—	FWDTEN	SWDTPS4	SWDTPS3	SWDTPS2	SWDTPS1	SWDTPS0	WDTWIN1	WDTWIN0	WINDIS	RCLKSEL1	RCLKSEL0	RWDTPS4	RWDTPS3	RWDTPS2	RWDTPS1	RWDTPS0
FPOR	—	—	—	—	—	—	—	—	—	—	—	r(1)	r(1)	—	—	—	—
FICD	—	—	—	—	—	—	—	—	—	r(1)	—	JTAGEN	—	—	—	ICS1	ICS0
FDMTIVTL	—	DMTIVT<15:0>															
FDMTIVTH	—	DMTIVT<31:16>															
FDMTCNTL	—	DMTCNT<15:0>															
FDMTCNTH	—	DMTCNT<31:16>															
FDMT	—	—	—	—	—	—	—	—	—	—	—	—	—	—	—	—	DMTDIS
FDEVOPT	—	—	—	SPI2PIN	—	—	SMBEN	r(1)	r(1)	r(1)	—	—	ALTI2C2	ALTI2C1	r(1)	—	—
FALTREG	—	—	CTXT4<2:0>			—	CTXT3<2:0>			—	CTXT2<2:0>			—	CTXT1<2:0>		
FMBXM	—	MBXM<15:0>															
FMBXHS1	—	MBXHSD3	MBXHSD2	MBXHSD1	MBXHSD0	MBXHSC3	MBXHSC2	MBXHSC1	MBXHSC0	MBXHSB3	MBXHSB2	MBXHSB1	MBXHSB0	MBXHSA3	MBXHSA2	MBXHSA1	MBXHSA0
FMBXHS2	—	MBXHSH3	MBXHSH2	MBXHSH1	MBXHSH0	MBXHSG3	MBXHSG2	MBXHSG1	MBXHSG0	MBXHSF3	MBXHSF2	MBXHSF1	MBXHSF0	MBXHSE3	MBXHSE2	MBXHSE1	MBXHSE0
FMBXHSEN	—	—	—	—	—	—	—	—	—	HS<H:A>EN							
FCFGPRA0	—	—	—	—	—	—	—	—	—	—	—	—	CPRA<4:0>				
FCFGPRB0	—	CPRB<15:0>															
FCFGPRC0	—	CPRC<15:0>															
FCFGPRD0	—	CPRD<15:0>															
FCFGPRE0	—	CPRE<15:0>															

Legend: — = unimplemented bit, read as ‘1’; r = reserved bit.

Note 1: Bit is reserved, maintain as ‘1’.

2: Bit is reserved, maintain as ‘0’.

© 2017-2018 Microchip Technology Inc.

TABLE 21-3: SLAVE CONFIGURATION REGISTERS MAP

Register Name	Bits 23-16	Bit 15	Bit 14	Bit 13	Bit 12	Bit 11	Bit 10	Bit 9	Bit 8	Bit 7	Bit 6	Bit 5	Bit 4	Bit 3	Bit 2	Bit 1	Bit 0
FS1OSCSEL	—	—	—	—	—	—	—	—	—	S1IESO	—	—	—	—	S1FNOSC<2:0>		
FS1OSC	—	—	—	—	—	—	—	—	r(1)	S1FCKSM<1:0>		—	—	—	S1OSCIOFNC	—	—
FS1WDT	—	S1FWDTEN	S1SWDTPS<4:0>					S1WDTWIN<1:0>		S1WINDIS	S1RCLKSEL<1:0>		S1RWDTPS<4:0>				
FS1POR	—	—	—	—	—	—	—	—	—	—	—	—	—	—	—	—	—
FS1ICD	—	S1NOBTSWP	—	S1ISOLAT	—	—	—	—	—	r(1)	—	—	—	—	—	S1ICS<1:0>	
FS1DEVOPT	—	S1MSRE	S1SSRE	S1SPI1PIN	—	—	—	—	—	—	—	—	—	S1ALTI2C1	—	—	—
FS1ALTREG	—	—	S1CTXT4<2:0>			—	S1CTXT3<2:0>			—	S1CTXT2<2:0>			—	S1CTXT1<2:0>		

Legend: — = unimplemented bit, read as '1'; r = reserved bit.

Note 1: Bit is reserved, maintain as '1'.

© 2017-2018 Microchip Technology Inc.

REGISTER 21-1: FSEC CONFIGURATION REGISTER

U-1	U-1	U-1	U-1	U-1	U-1	U-1	U-1
—	—	—	—	—	—	—	—
bit 23							bit 16

R/PO-1	U-1	U-1	U-1	R/PO-1	R/PO-1	R/PO-1	R/PO-1
AIVTDIS	—	—	—	CSS2	CSS1	CSS0	CWRP
bit 15							bit 8

R/PO-1	R/PO-1	R/PO-1	U-1	R/PO-1	R/PO-1	R/PO-1	R/PO-1
GSS1	GSS0	GWRP	—	BSEN	BSS1	BSS0	BWRP
bit 7							bit 0

Legend:	PO = Program Once bit		
R = Readable bit	W = Writable bit	U = Unimplemented bit, read as ‘0’	
-n = Value at POR	‘1’ = Bit is set	‘0’ = Bit is cleared	x = Bit is unknown

bit 23-16 **Unimplemented:** Read as ‘1’

bit 15 **AIVTDIS:** Alternate Interrupt Vector Table Disable bit
1 = Disables AIVT
0 = Enables AIVT

bit 14-12 **Unimplemented:** Read as ‘1’

bit 11-9 **CSS<2:0>:** Configuration Segment Code Flash Protection Level bits
111 = No protection (other than CWRP write protection)
110 = Standard security
10x = Enhanced security
0xx = High security

bit 8 **CWRP:** Configuration Segment Write-Protect bit
1 = Configuration Segment is not write-protected
0 = Configuration Segment is write-protected

bit 7-6 **GSS<1:0>:** General Segment Code Flash Protection Level bits
11 = No protection (other than GWRP write protection)
10 = Standard security
0x = High security

bit 5 **GWRP:** General Segment Write-Protect bit
1 = User program memory is not write-protected
0 = User program memory is write-protected

bit 4 **Unimplemented:** Read as ‘1’

bit 3 **BSEN:** Boot Segment Control bit
1 = No Boot Segment
0 = Boot Segment size is determined by BSLIM<12:0>

bit 2-1 **BSS<1:0>:** Boot Segment Code Flash Protection Level bits
11 = No protection (other than BWRP write protection)
10 = Standard security
0x = High security

bit 0 **BWRP:** Boot Segment Write-Protect bit
1 = User program memory is not write-protected
0 = User program memory is write-protected

© 2017-2018 Microchip Technology Inc.

REGISTER 21-2: FBSLIM CONFIGURATION REGISTER

U-1	U-1	U-1	U-1	U-1	U-1	U-1	U-1
—	—	—	—	—	—	—	—
bit 23							bit 16

U-1	U-1	U-1	R/PO-1	R/PO-1	R/PO-1	R/PO-1	R/PO-1
—	—	—	BSLIM<12:8>				
bit 15							bit 8

R/PO-1	R/PO-1	R/PO-1	R/PO-1	R/PO-1	R/PO-1	R/PO-1	R/PO-1
BSLIM<7:0>							
bit 7							bit 0

Legend:	PO = Program Once bit		
R = Readable bit	W = Writable bit	U = Unimplemented bit, read as ‘0’	
-n = Value at POR	‘1’ = Bit is set	‘0’ = Bit is cleared	x = Bit is unknown

bit 23-13 **Unimplemented:** Read as ‘1’

bit 12-0 **BSLIM<12:0>:** Boot Segment Code Flash Page Address Limit bits

Contains the page address of the first active General Segment page. The value to be programmed is the inverted page address, such that programming additional ‘0’s can only increase the Boot Segment size.

REGISTER 21-3: FSIGN CONFIGURATION REGISTER

U-1	U-1	U-1	U-1	U-1	U-1	U-1	U-1
—	—	—	—	—	—	—	—
bit 23							bit 16

r-0	U-1	U-1	U-1	U-1	U-1	U-1	U-1
—	—	—	—	—	—	—	—
bit 15							bit 8

U-1	U-1	U-1	U-1	U-1	U-1	U-1	U-1
—	—	—	—	—	—	—	—
bit 7							bit 0

Legend:	r = Reserved bit	PO = Program Once bit	
R = Readable bit	W = Writable bit	U = Unimplemented bit, read as ‘0’	
-n = Value at POR	‘1’ = Bit is set	‘0’ = Bit is cleared	x = Bit is unknown

bit 23-16 **Unimplemented:** Read as ‘1’

bit 15 **Reserved:** Maintain as ‘0’

bit 14-0 **Unimplemented:** Read as ‘1’

REGISTER 21-4: FOSCSEL CONFIGURATION REGISTER

U-1	U-1	U-1	U-1	U-1	U-1	U-1	U-1
—	—	—	—	—	—	—	—
bit 23							bit 16

U-1	U-1	U-1	U-1	U-1	U-1	U-1	U-1
—	—	—	—	—	—	—	—
bit 15							bit 8

R/PO-1	U-1	U-1	U-1	U-1	R/PO-1	R/PO-1	R/PO-1
IESO	—	—	—	—	FNOSC2	FNOSC1	FNOSC0
bit 7							bit 0

Legend:	PO = Program Once bit		
R = Readable bit	W = Writable bit	U = Unimplemented bit, read as ‘0’	
-n = Value at POR	‘1’ = Bit is set	‘0’ = Bit is cleared	x = Bit is unknown

bit 23-8 **Unimplemented:** Read as ‘1’

bit 7 **IESO:** Internal External Switchover bit
1 = Internal External Switchover mode is enabled (Two-Speed Start-up is enabled)
0 = Internal External Switchover mode is disabled (Two-Speed Start-up is disabled)

bit 6-3 **Unimplemented:** Read as ‘1’

bit 2-0 **FNOSC<2:0>:** Initial Oscillator Source Selection bits
111 = Internal Fast RC (FRC) Oscillator with Postscaler
110 = Backup Fast RC (BFRC)
101 = LPRC Oscillator
100 = Reserved
011 = Primary Oscillator with PLL (XTPLL, HSPLL, ECPLL)
010 = Primary (XT, HS, EC) Oscillator
001 = Internal Fast RC Oscillator with PLL (FRCPLL)
000 = Fast RC (FRC) Oscillator

© 2017-2018 Microchip Technology Inc.

REGISTER 21-5: FOSC CONFIGURATION REGISTER

U-1	U-1	U-1	U-1	U-1	U-1	U-1	U-1
—	—	—	—	—	—	—	—
bit 23							bit 16

U-1	U-1	U-1	R/PO-1	R/PO-1	R/PO-1	U-1	r-1
—	—	—	XTBST	XTCFG1	XTCFG0	—	—
bit 15							bit 8

R/PO-1	R/PO-1	U-1	U-1	U-1	R/PO-1	R/PO-1	R/PO-1
FCKSM1	FCKSM0	—	—	—	OSCIOFNC(1)	POSCMD1	POSCMD0
bit 7							bit 0

Legend:	PO = Program Once bit	r = Reserved bit	
R = Readable bit	W = Writable bit	U = Unimplemented bit, read as ‘0’	
-n = Value at POR	‘1’ = Bit is set	‘0’ = Bit is cleared	x = Bit is unknown

bit 23-13 **Unimplemented:** Read as ‘1’

bit 12 **XTBST:** Oscillator Kick-Start Programmability bit
1 = Boosts the kick-start
0 = Default kick-start

bit 11-10 **XTCFG<1:0>:** Crystal Oscillator Drive Select bits
Current gain programmability for oscillator (output drive).
11 = Gain3 (use for 24-32 MHz crystals)
10 = Gain2 (use for 16-24 MHz crystals)
01 = Gain1 (use for 8-16 MHz crystals)
00 = Gain0 (use for 4-8 MHz crystals)

bit 9 **Unimplemented:** Read as ‘1’

bit 8 **Reserved:** Maintain as ‘1’

bit 7-6 **FCKSM<1:0>:** Clock Switching Mode bits
1x = Clock switching is disabled, Fail-Safe Clock Monitor is disabled
01 = Clock switching is enabled, Fail-Safe Clock Monitor is disabled
00 = Clock switching is enabled, Fail-Safe Clock Monitor is enabled

bit 5-3 **Unimplemented:** Read as ‘1’

bit 2 **OSCIOFNC:** OSCO Pin Function bit (except in XT and HS modes)(1)
1 = OSCO is the clock output
0 = OSCO is the general purpose digital I/O pin

bit 1-0 **POSCMD<1:0>:** Primary Oscillator Mode Select bits
11 = Primary Oscillator is disabled
10 = HS Crystal Oscillator mode (10 MHz-32 MHz)
01 = XT Crystal Oscillator mode (3.5 MHz-10 MHz)
00 = EC (External Clock) mode

Note 1: The OSCO pin function is determined by the S1OSCIOFNC Configuration bit. If both the Master core OSCIOFNC and Slave core S1OSCIOFNC bits are set, the Master core OSCIOFNC bit has priority.

REGISTER 21-6: FWDT CONFIGURATION REGISTER

U-1	U-1	U-1	U-1	U-1	U-1	U-1	U-1
—	—	—	—	—	—	—	—
bit 23							bit 16

R/PO-1	R/PO-1	R/PO-1	R/PO-1	R/PO-1	R/PO-1	R/PO-1	R/PO-1
FWDTEN	SWDTPS4	SWDTPS3	SWDTPS2	SWDTPS1	SWDTPS0	WDTWIN1	WDTWIN0
bit 15							bit 8

R/PO-1	R/PO-1	R/PO-1	R/PO-1	R/PO-1	R/PO-1	R/PO-1	R/PO-1
WINDIS	RCLKSEL1	RCLKSEL0	RWDTPS4	RWDTPS3	RWDTPS2	RWDTPS1	RWDTPS0
bit 7							bit 0

Legend:	PO = Program Once bit		
R = Readable bit	W = Writable bit	U = Unimplemented bit, read as ‘0’	
-n = Value at POR	‘1’ = Bit is set	‘0’ = Bit is cleared	x = Bit is unknown

bit 23-16 **Unimplemented:** Read as ‘1’

bit 15 **FWDTEN:** Watchdog Timer Enable bit
1 = WDT is enabled in hardware
0 = WDT controller via the ON bit (WDTCONL<15>)

bit 14-10 **SWDTPS<4:0>:** Sleep Mode Watchdog Timer Period Select bits
11111 = Divide by 2 ^ 30 = 1,073,741,824
11110 = Divide by 2 ^ 29 = 526,870,912
...
00001 = Divide by 2 ^ 2, 4
00000 = Divide by 2 ^ 1, 2

bit 9-8 **WDTWIN<1:0>:** Watchdog Timer Window Select bits
11 = WDT window is 25% of the WDT period
10 = WDT window is 37.5% of the WDT period
01 = WDT window is 50% of the WDT period
00 = WDT Window is 75% of the WDT period

bit 7 **WINDIS:** Watchdog Timer Window Enable bit
1 = Watchdog Timer is in Non-Window mode
0 = Watchdog Timer is in Window mode

bit 6-5 **RCLKSEL<1:0>:** Watchdog Timer Clock Select bits
11 = LPRC clock
10 = Uses FRC when WINDIS = 0, system clock is not INTOSC/LPRC and device is not in Sleep; otherwise, uses INTOSC/LPRC
01 = Uses peripheral clock when system clock is not INTOSC/LPRC and device is not in Sleep; otherwise, uses INTOSC/LPRC
00 = Reserved

bit 4-0 **RWDTPS<4:0>:** Run Mode Watchdog Timer Period Select bits
11111 = Divide by 2 ^ 30 = 1,073,741,824
11110 = Divide by 2 ^ 29 = 526,870,912
...
00001 = Divide by 2 ^ 2, 4
00000 = Divide by 2 ^ 1, 2

© 2017-2018 Microchip Technology Inc.

REGISTER 21-7: FPOR CONFIGURATION REGISTER

U-1	U-1	U-1	U-1	U-1	U-1	U-1	U-1
—	—	—	—	—	—	—	—
bit 23							bit 16

U-1	U-1	U-1	U-1	U-1	U-1	U-1	U-1
—	—	—	—	—	—	—	—
bit 15							bit 8

U-1	U-1	r-1	r-1	U-1	U-1	U-1	U-1
—	—	—	—	—	—	—	—
bit 7							bit 0

Legend:	PO = Program Once bit	r = Reserved bit	
R = Readable bit	W = Writable bit	U = Unimplemented bit, read as ‘0’	
-n = Value at POR	‘1’ = Bit is set	‘0’ = Bit is cleared	x = Bit is unknown

bit 23-6 **Unimplemented:** Read as ‘1’

bit 5-4 **Reserved:** Maintain as ‘1’

bit 3-0 **Unimplemented:** Read as ‘1’

REGISTER 21-8: FICD CONFIGURATION REGISTER

U-1	U-1	U-1	U-1	U-1	U-1	U-1	U-1
—	—	—	—	—	—	—	—
bit 23							bit 16

U-1	U-1	U-1	U-1	U-1	U-1	U-1	U-1
—	—	—	—	—	—	—	—
bit 15							bit 8

r-1	U-1	R/PO-1	U-1	U-1	U-1	R/PO-1	R/PO-1
—	—	JTAGEN	—	—	—	ICS1	ICS0
bit 7							bit 0

Legend:	PO = Program Once bit	r = Reserved bit	
R = Readable bit	W = Writable bit	U = Unimplemented bit, read as ‘0’	
-n = Value at POR	‘1’ = Bit is set	‘0’ = Bit is cleared	x = Bit is unknown

bit 23-8 **Unimplemented:** Read as ‘1’

bit 7 **Reserved:** Maintain as ‘1’

bit 6 **Unimplemented:** Read as ‘1’

bit 5 **JTAGEN:** JTAG Enable bit
1 = JTAG port is enabled
0 = JTAG port is disabled

bit 4-2 **Unimplemented:** Read as ‘1’

bit 1-0 **ICS<1:0>:** ICD Communication Channel Select bits
11 = Master communicates on PGC1 and PGD1
10 = Master communicates on PGC2 and PGD2
01 = Master communicates on PGC3 and PGD3
00 = Reserved, do not use

© 2017-2018 Microchip Technology Inc.

REGISTER 21-9: FDMTIVTL CONFIGURATION REGISTER

U-1	U-1	U-1	U-1	U-1	U-1	U-1	U-1
—	—	—	—	—	—	—	—
bit 23							bit 16

R/PO-1	R/PO-1	R/PO-1	R/PO-1	R/PO-1	R/PO-1	R/PO-1	R/PO-1
DMTIVT<15:8>							
bit 15							bit 8

R/PO-1	R/PO-1	R/PO-1	R/PO-1	R/PO-1	R/PO-1	R/PO-1	R/PO-1
DMTIVT<7:0>							
bit 7							bit 0

Legend:	PO = Program Once bit		
R = Readable bit	W = Writable bit	U = Unimplemented bit, read as ‘0’	
-n = Value at POR	‘1’ = Bit is set	‘0’ = Bit is cleared	x = Bit is unknown

bit 23-16 **Unimplemented:** Read as ‘1’

bit 15-0 **DMTIVT<15:0>:** DMT Window Interval Lower 16 bits

REGISTER 21-10: FDMTIVTH CONFIGURATION REGISTER

U-1	U-1	U-1	U-1	U-1	U-1	U-1	U-1
—	—	—	—	—	—	—	—
bit 23							bit 16

R/PO-1	R/PO-1	R/PO-1	R/PO-1	R/PO-1	R/PO-1	R/PO-1	R/PO-1
DMTIVT<31:24>							
bit 15							bit 8

R/PO-1	R/PO-1	R/PO-1	R/PO-1	R/PO-1	R/PO-1	R/PO-1	R/PO-1
DMTIVT<23:16>							
bit 7							bit 0

Legend:	PO = Program Once bit		
R = Readable bit	W = Writable bit	U = Unimplemented bit, read as ‘0’	
-n = Value at POR	‘1’ = Bit is set	‘0’ = Bit is cleared	x = Bit is unknown

bit 23-16 **Unimplemented:** Read as ‘1’

bit 15-0 **DMTIVT<31:16>:** DMT Window Interval Higher 16 bits

REGISTER 21-11: FDMTCNTL CONFIGURATION REGISTER

U-1	U-1	U-1	U-1	U-1	U-1	U-1	U-1
—	—	—	—	—	—	—	—
bit 23							bit 16

R/PO-1	R/PO-1	R/PO-1	R/PO-1	R/PO-1	R/PO-1	R/PO-1	R/PO-1
DMTCNT<15:8>							
bit 15							bit 8

R/PO-1	R/PO-1	R/PO-1	R/PO-1	R/PO-1	R/PO-1	R/PO-1	R/PO-1
DMTCNT<7:0>							
bit 7							bit 0

Legend:	PO = Program Once bit		
R = Readable bit	W = Writable bit	U = Unimplemented bit, read as ‘0’	
-n = Value at POR	‘1’ = Bit is set	‘0’ = Bit is cleared	x = Bit is unknown

bit 23-16 **Unimplemented:** Read as ‘1’

bit 15-0 **DMTCNT<15:0>:** DMT Instruction Count Time-out Value Lower 16 bits

REGISTER 21-12: FDMTCNTH CONFIGURATION REGISTER

U-1	U-1	U-1	U-1	U-1	U-1	U-1	U-1
—	—	—	—	—	—	—	—
bit 23							bit 16

R/PO-1	R/PO-1	R/PO-1	R/PO-1	R/PO-1	R/PO-1	R/PO-1	R/PO-1
DMTCNT<31:24>							
bit 15							bit 8

R/PO-1	R/PO-1	R/PO-1	R/PO-1	R/PO-1	R/PO-1	R/PO-1	R/PO-1
DMTCNT<23:16>							
bit 7							bit 0

Legend:	PO = Program Once bit		
R = Readable bit	W = Writable bit	U = Unimplemented bit, read as ‘0’	
-n = Value at POR	‘1’ = Bit is set	‘0’ = Bit is cleared	x = Bit is unknown

bit 23-16 **Unimplemented:** Read as ‘1’

bit 15-0 **DMTCNT<31:16>:** DMT Instruction Count Time-out Value Upper 16 bits

© 2017-2018 Microchip Technology Inc.

REGISTER 21-13: FDMT CONFIGURATION REGISTER

U-1	U-1	U-1	U-1	U-1	U-1	U-1	U-1
—	—	—	—	—	—	—	—
bit 23							bit 16

U-1	U-1	U-1	U-1	U-1	U-1	U-1	U-1
—	—	—	—	—	—	—	—
bit 15							bit 8

U-1	U-1	U-1	U-1	U-1	U-1	U-1	R/PO-1
—	—	—	—	—	—	—	DMTDIS
bit 7							bit 0

Legend:	PO = Program Once bit		
R = Readable bit	W = Writable bit	U = Unimplemented bit, read as ‘0’	
-n = Value at POR	‘1’ = Bit is set	‘0’ = Bit is cleared	x = Bit is unknown

bit 23-1 **Unimplemented:** Read as ‘1’

bit 0 **DMTDIS:** DMT Disable bit
1 = DMT is disabled
0 = DMT is enabled

REGISTER 21-14: FDEVOPT CONFIGURATION REGISTER

U-1	U-1	U-1	U-1	U-1	U-1	U-1	U-1
—	—	—	—	—	—	—	—
bit 23							bit 16

U-1	U-1	R/PO-1	U-1	U-1	R/PO-1	r-1	r-1
—	—	SPI2PIN(1)	—	—	SMBEN	—	—
bit 15							bit 8

r-1	U-1	U-1	R/PO-1	R/PO-1	r-1	U-1	U-1
—	—	—	ALTI2C2	ALTI2C1	—	—	—
bit 7							bit 0

Legend:	PO = Program Once bit	r = Reserved bit	
R = Readable bit	W = Writable bit	U = Unimplemented bit, read as ‘0’	
-n = Value at POR	‘1’ = Bit is set	‘0’ = Bit is cleared	x = Bit is unknown

bit 23-14 **Unimplemented:** Read as ‘1’

bit 13 **SPI2PIN:** Master SPI #2 Fast I/O Pad Disable bit(1)
1 = Master SPI2 uses PPS (I/O remap) to make connections with device pins
0 = Master SPI2 uses direct connections with specified device pins

bit 12-11 **Unimplemented:** Read as ‘1’

bit 10 **SMBEN:** Select Input Voltage Threshold for I^2C Pads to be SMBus 3.0 Compliant bit
1 = Enables SMBus 3.0 input threshold voltage
0 = I^2C pad input buffer operation

bit 9-7 **Reserved:** Maintain as ‘1’

bit 6-5 **Unimplemented:** Read as ‘1’

bit 4 **ALTI2C2:** Alternate I2C2 Pin Mapping bit
1 = Default location for SCL2/SDA2 pins
0 = Alternate location for SCL2/SDA2 pins (ASCL2/ASDA2)

bit 3 **ALTI2C1:** Alternate I2C1 Pin Mapping bit
1 = Default location for SCL1/SDA1 pins
0 = Alternate location for SCL1/SDA1 pins (ASCL1/ASDA1)

bit 2 **Reserved:** Maintain as ‘1’

bit 1-0 **Unimplemented:** Read as ‘1’

Note 1: Fixed pin option is only available for higher pin packages (48-pin, 64-pin and 80-pin).

© 2017-2018 Microchip Technology Inc.

REGISTER 21-15: FALTREG CONFIGURATION REGISTER

U-1	U-1	U-1	U-1	U-1	U-1	U-1	U-1
—	—	—	—	—	—	—	—
bit 23							bit 16

U-1	R/PO-1	R/PO-1	R/PO-1	U-1	R/PO-1	R/PO-1	R/PO-1
—	CTXT4<2:0>			—	CTXT3<2:0>		
bit 15							bit 8

U-1	R/PO-1	R/PO-1	R/PO-1	U-1	R/PO-1	R/PO-1	R/PO-1
—	CTXT2<2:0>			—	CTXT1<2:0>		
bit 7							bit 0

Legend:	PO = Program Once bit		
R = Readable bit	W = Writable bit	U = Unimplemented bit, read as ‘0’	
-n = Value at POR	‘1’ = Bit is set	‘0’ = Bit is cleared	x = Bit is unknown

bit 23-15 **Unimplemented:** Read as ‘1’

bit 14-12 **CTXT4<2:0>:** Specifies the Alternate Working Register Set #4 with Interrupt Priority Levels (IPL) bits
111 = Not assigned
110 = Alternate Register Set #4 is assigned to IPL Level 7
101 = Alternate Register Set #4 is assigned to IPL Level 6
100 = Alternate Register Set #4 is assigned to IPL Level 5
011 = Alternate Register Set #4 is assigned to IPL Level 4
010 = Alternate Register Set #4 is assigned to IPL Level 3
001 = Alternate Register Set #4 is assigned to IPL Level 2
000 = Alternate Register Set #4 is assigned to IPL Level 1

bit 11 **Unimplemented:** Read as ‘1’

bit 10-8 **CTXT3<2:0>:** Specifies the Alternate Working Register Set #3 with Interrupt Priority Levels (IPL) bits
111 = Not assigned
110 = Alternate Register Set #3 is assigned to IPL Level 7
101 = Alternate Register Set #3 is assigned to IPL Level 6
100 = Alternate Register Set #3 is assigned to IPL Level 5
011 = Alternate Register Set #3 is assigned to IPL Level 4
010 = Alternate Register Set #3 is assigned to IPL Level 3
001 = Alternate Register Set #3 is assigned to IPL Level 2
000 = Alternate Register Set #3 is assigned to IPL Level 1

bit 7 **Unimplemented:** Read as ‘1’

bit 6-4 **CTXT2<2:0>:** Specifies the Alternate Working Register Set #2 with Interrupt Priority Levels (IPL) bits
111 = Not assigned
110 = Alternate Register Set #2 is assigned to IPL Level 7
101 = Alternate Register Set #2 is assigned to IPL Level 6
100 = Alternate Register Set #2 is assigned to IPL Level 5
011 = Alternate Register Set #2 is assigned to IPL Level 4
010 = Alternate Register Set #2 is assigned to IPL Level 3
001 = Alternate Register Set #2 is assigned to IPL Level 2
000 = Alternate Register Set #2 is assigned to IPL Level 1

bit 3 **Unimplemented:** Read as ‘1’

REGISTER 21-15: FALTREG CONFIGURATION REGISTER (CONTINUED)

bit 2-0 **CTXT1<2:0>:** Specifies the Alternate Working Register Set #1 with Interrupt Priority Levels (IPL) bits
111 = Not assigned
110 = Alternate Register Set #1 is assigned to IPL Level 7
101 = Alternate Register Set #1 is assigned to IPL Level 6
100 = Alternate Register Set #1 is assigned to IPL Level 5
011 = Alternate Register Set #1 is assigned to IPL Level 4
010 = Alternate Register Set #1 is assigned to IPL Level 3
001 = Alternate Register Set #1 is assigned to IPL Level 2
000 = Alternate Register Set #1 is assigned to IPL Level 1

REGISTER 21-16: FMBXM CONFIGURATION REGISTER

U-1	U-1	U-1	U-1	U-1	U-1	U-1	U-1
—	—	—	—	—	—	—	—
bit 23							bit 16

R/PO-1	R/PO-1	R/PO-1	R/PO-1	R/PO-1	R/PO-1	R/PO-1	R/PO-1
MBXM15	MBXM14	MBXM13	MBXM12	MBXM11	MBXM10	MBXM9	MBXM8
bit 15							bit 8

R/PO-1	R/PO-1	R/PO-1	R/PO-1	R/PO-1	R/PO-1	R/PO-1	R/PO-1
MBXM7	MBXM6	MBXM5	MBXM4	MBXM3	MBXM2	MBXM1	MBXM0
bit 7							bit 0

Legend:	PO = Program Once bit		
R = Readable bit	W = Writable bit	U = Unimplemented bit, read as ‘0’	
-n = Value at POR	‘1’ = Bit is set	‘0’ = Bit is cleared	x = Bit is unknown

bit 23-16 **Unimplemented:** Read as ‘1’

bit 15 **MBXM15:** Mailbox Data Register Channel Direction Fuses bits
1 = Mailbox Register #15 is configured for Master data read (Slave to Master data transfer)
0 = Mailbox Register #15 is configured for Master data write (Master to Slave data transfer)

bit 14 **MBXM14:** Mailbox Data Register Channel Direction Fuses bits
1 = Mailbox Register #14 is configured for Master data read (Slave to Master data transfer)
0 = Mailbox Register #14 is configured for Master data write (Master to Slave data transfer)

bit 13 **MBXM13:** Mailbox Data Register Channel Direction Fuses bits
1 = Mailbox Register #13 is configured for Master data read (Slave to Master data transfer)
0 = Mailbox Register #13 is configured for Master data write (Master to Slave data transfer)

bit 12 **MBXM12:** Mailbox Data Register Channel Direction Fuses bits
1 = Mailbox Register #12 is configured for Master data read (Slave to Master data transfer)
0 = Mailbox Register #12 is configured for Master data write (Master to Slave data transfer)

bit 11 **MBXM11:** Mailbox Data Register Channel Direction Fuses bits
1 = Mailbox Register #11 is configured for Master data read (Slave to Master data transfer)
0 = Mailbox Register #11 is configured for Master data write (Master to Slave data transfer)

bit 10 **MBXM10:** Mailbox Data Register Channel Direction Fuses bits
1 = Mailbox Register #10 is configured for Master data read (Slave to Master data transfer)
0 = Mailbox Register #10 is configured for Master data write (Master to Slave data transfer)

© 2017-2018 Microchip Technology Inc.

REGISTER 21-16: FMBXM CONFIGURATION REGISTER (CONTINUED)

bit 9 **MBXM9:** Mailbox Data Register Channel Direction Fuses bits
1 = Mailbox Register #9 is configured for Master data read (Slave to Master data transfer)
0 = Mailbox Register #9 is configured for Master data write (Master to Slave data transfer)

bit 8 **MBXM8:** Mailbox Data Register Channel Direction Fuses bits
1 = Mailbox Register #8 is configured for Master data read (Slave to Master data transfer)
0 = Mailbox Register #8 is configured for Master data write (Master to Slave data transfer)

bit 7 **MBXM7:** Mailbox Data Register Channel Direction Fuses bits
1 = Mailbox Register #7 is configured for Master data read (Slave to Master data transfer)
0 = Mailbox Register #7 is configured for Master data write (Master to Slave data transfer)

bit 6 **MBXM6:** Mailbox Data Register Channel Direction Fuses bits
1 = Mailbox Register #6 is configured for Master data read (Slave to Master data transfer)
0 = Mailbox Register #6 is configured for Master data write (Master to Slave data transfer)

bit 5 **MBXM5:** Mailbox Data Register Channel Direction Fuses bits
1 = Mailbox Register #5 is configured for Master data read (Slave to Master data transfer)
0 = Mailbox Register #5 is configured for Master data write (Master to Slave data transfer)

bit 4 **MBXM4:** Mailbox Data Register Channel Direction Fuses bits
1 = Mailbox Register #4 is configured for Master data read (Slave to Master data transfer)
0 = Mailbox Register #4 is configured for Master data write (Master to Slave data transfer)

bit 3 **MBXM3:** Mailbox Data Register Channel Direction Fuses bits
1 = Mailbox Register #3 is configured for Master data read (Slave to Master data transfer)
0 = Mailbox Register #3 is configured for Master data write (Master to Slave data transfer)

bit 2 **MBXM2:** Mailbox Data Register Channel Direction Fuses bits
1 = Mailbox Register #2 is configured for Master data read (Slave to Master data transfer)
0 = Mailbox Register #2 is configured for Master data write (Master to Slave data transfer)

bit 1 **MBXM1:** Mailbox Data Register Channel Direction Fuses bits
1 = Mailbox Register #1 is configured for Master data read (Slave to Master data transfer)
0 = Mailbox Register #1 is configured for Master data write (Master to Slave data transfer)

bit 0 **MBXM0:** Mailbox Data Register Channel Direction Fuses bits
1 = Mailbox Register #0 is configured for Master data read (Slave to Master data transfer)
0 = Mailbox Register #0 is configured for Master data write (Master to Slave data transfer)

REGISTER 21-17: FMBXHS1 CONFIGURATION REGISTER

U-1	U-1	U-1	U-1	U-1	U-1	U-1	U-1
—	—	—	—	—	—	—	—
bit 23							bit 16

R/PO-1	R/PO-1	R/PO-1	R/PO-1	R/PO-1	R/PO-1	R/PO-1	R/PO-1
MBXHSD3	MBXHSD2	MBXHSD1	MBXHSD0	MBXHSC3	MBXHSC2	MBXHSC1	MBXHSC0
bit 15							bit 8

R/PO-1	R/PO-1	R/PO-1	R/PO-1	R/PO-1	R/PO-1	R/PO-1	R/PO-1
MBXHSB3	MBXHSB2	MBXHSB1	MBXHSB0	MBXHSA3	MBXHSA2	MBXHSA1	MBXHSA0
bit 7							bit 0

Legend:	PO = Program Once bit		
R = Readable bit	W = Writable bit	U = Unimplemented bit, read as ‘0’	
-n = Value at POR	‘1’ = Bit is set	‘0’ = Bit is cleared	x = Bit is unknown

bit 23-16 **Unimplemented:** Read as ‘1’

bit 15-12 **MBXHSD<3:0>:** Mailbox Handshake Protocol Block D Register Assignment bits
`1111` = MSIxMBXD15 is assigned to Mailbox Handshake Protocol Block D
`...`
`0001` = MSIxMBXD1 is assigned to Mailbox Handshake Protocol Block D
`0000` = MSIxMBXD0 is assigned to Mailbox Handshake Protocol Block D

bit 11-8 **MBXHSC<3:0>:** Mailbox Handshake Protocol Block C Register Assignment bits
`1111` = MSIxMBXD15 is assigned to Mailbox Handshake Protocol Block C
`...`
`0001` = MSIxMBXD1 is assigned to Mailbox Handshake Protocol Block C
`0000` = MSIxMBXD0 is assigned to Mailbox Handshake Protocol Block C

bit 7-4 **MBXHSB<3:0>:** Mailbox Handshake Protocol Block B Register Assignment bits
`1111` = MSIxMBXD15 is assigned to Mailbox Handshake Protocol Block B
`...`
`0001` = MSIxMBXD1 is assigned to Mailbox Handshake Protocol Block B
`0000` = MSIxMBXD0 is assigned to Mailbox Handshake Protocol Block B

bit 3-0 **MBXHSA<3:0>:** Mailbox Handshake Protocol Block A Register Assignment bits
`1111` = MSIxMBXD15 is assigned to Mailbox Handshake Protocol Block A
`...`
`0001` = MSIxMBXD1 is assigned to Mailbox Handshake Protocol Block A
`0000` = MSIxMBXD0 is assigned to Mailbox Handshake Protocol Block A

© 2017-2018 Microchip Technology Inc.

REGISTER 21-18: FMBXHS2 CONFIGURATION REGISTER

U-1	U-1	U-1	U-1	U-1	U-1	U-1	U-1
—	—	—	—	—	—	—	—
bit 23							bit 16

R/PO-1	R/PO-1	R/PO-1	R/PO-1	R/PO-1	R/PO-1	R/PO-1	R/PO-1
MBXHSH3	MBXHSH2	MBXHSH1	MBXHSH0	MBXHSG3	MBXHSG2	MBXHSG1	MBXHSG0
bit 15							bit 8

R/PO-1	R/PO-1	R/PO-1	R/PO-1	R/PO-1	R/PO-1	R/PO-1	R/PO-1
MBXHSF3	MBXHSF2	MBXHSF1	MBXHSF0	MBXHSE3	MBXHSE2	MBXHSE1	MBXHSE0
bit 7							bit 0

Legend:	PO = Program Once bit		
R = Readable bit	W = Writable bit	U = Unimplemented bit, read as ‘0’	
-n = Value at POR	‘1’ = Bit is set	‘0’ = Bit is cleared	x = Bit is unknown

bit 23-16 **Unimplemented:** Read as ‘1’

bit 15-12 **MBXHSH<3:0>:** Mailbox Handshake Protocol Block H Register Assignment bits
`1111` = MSIxMBXD15 is assigned to Mailbox Handshake Protocol Block H
`...`
`0001` = MSIxMBXD1 is assigned to Mailbox Handshake Protocol Block H
`0000` = MSIxMBXD0 is assigned to Mailbox Handshake Protocol Block H

bit 11-8 **MBXHSG<3:0>:** Mailbox Handshake Protocol Block G Register Assignment bits
`1111` = MSIxMBXD15 is assigned to Mailbox Handshake Protocol Block G
`...`
`0001` = MSIxMBXD1 is assigned to Mailbox Handshake Protocol Block G
`0000` = MSIxMBXD0 is assigned to Mailbox Handshake Protocol Block G

bit 7-4 **MBXHSF<3:0>:** Mailbox Handshake Protocol Block F Register Assignment bits
`1111` = MSIxMBXD15 is assigned to Mailbox Handshake Protocol Block F
`...`
`0001` = MSIxMBXD1 is assigned to Mailbox Handshake Protocol Block F
`0000` = MSIxMBXD0 is assigned to Mailbox Handshake Protocol Block F

bit 3-0 **MBXHSE<3:0>:** Mailbox Handshake Protocol Block E Register Assignment bits
`1111` = MSIxMBXD15 is assigned to Mailbox Handshake Protocol Block E
`...`
`0001` = MSIxMBXD1 is assigned to Mailbox Handshake Protocol Block E
`0000` = MSIxMBXD0 is assigned to Mailbox Handshake Protocol Block E

REGISTER 21-19: FMBXHSEN CONFIGURATION REGISTER

U-1	U-1	U-1	U-1	U-1	U-1	U-1	U-1
—	—	—	—	—	—	—	—
bit 23							bit 16

U-1	U-1	U-1	U-1	U-1	U-1	U-1	U-1
—	—	—	—	—	—	—	—
bit 15							bit 8

R/PO-1	R/PO-1	R/PO-1	R/PO-1	R/PO-1	R/PO-1	R/PO-1	R/PO-1
HS<H:A>EN							
bit 7							bit 0

Legend:	PO = Program Once bit		
R = Readable bit	W = Writable bit	U = Unimplemented bit, read as ‘0’	
-n = Value at POR	‘1’ = Bit is set	‘0’ = Bit is cleared	x = Bit is unknown

bit 23-8 **Unimplemented:** Read as ‘1’

bit 7-0 **HS<H:A>EN:** Mailbox Data Flow Control Protocol Block x Enable Fuses bits (x = A, B, C, D, E, F, G, H)
1 = Mailbox data flow control handshake protocol block is disabled
0 = Mailbox data flow control handshake protocol block is enabled

REGISTER 21-20: FCFGPRA0: PORTA CONFIGURATION REGISTER

U-1	U-1	U-1	U-1	U-1	U-1	U-1	U-1
—	—	—	—	—	—	—	—
bit 23							bit 16

U-1	U-1	U-1	U-1	U-1	U-1	U-1	U-1
—	—	—	—	—	—	—	—
bit 15							bit 8

U-1	U-1	U-1	R/PO-1	R/PO-1	R/PO-1	R/PO-1	R/PO-1
—	—	—	CPRA<4:0>				
bit 7							bit 0

Legend:	PO = Program Once bit		
R = Readable bit	W = Writable bit	U = Unimplemented bit, read as ‘0’	
-n = Value at POR	‘1’ = Bit is set	‘0’ = Bit is cleared	x = Bit is unknown

bit 23-5 **Unimplemented:** Read as ‘1’

bit 4-0 **CPRA<4:0>:** Configure PORTA Ownership bits
1 = Master core owns pin
0 = Slave core owns pin

© 2017-2018 Microchip Technology Inc.

REGISTER 21-21: FCFGPRB0: PORTB CONFIGURATION REGISTER

U-1	U-1	U-1	U-1	U-1	U-1	U-1	U-1
—	—	—	—	—	—	—	—
bit 23							bit 16

R/PO-1	R/PO-1	R/PO-1	R/PO-1	R/PO-1	R/PO-1	R/PO-1	R/PO-1
CPRB<15:8>							
bit 15							bit 8

R/PO-1	R/PO-1	R/PO-1	R/PO-1	R/PO-1	R/PO-1	R/PO-1	R/PO-1
CPRB<7:0>							
bit 7							bit 0

Legend:	PO = Program Once bit		
R = Readable bit	W = Writable bit	U = Unimplemented bit, read as ‘0’	
-n = Value at POR	‘1’ = Bit is set	‘0’ = Bit is cleared	x = Bit is unknown

bit 23-16 **Unimplemented:** Read as ‘1’

bit 15-0 **CPRB<15:0>:** Configure PORTB Ownership bits
1 = Master core owns pin
0 = Slave core owns pin

REGISTER 21-22: FCFGPRC0: PORTC CONFIGURATION REGISTER

U-1	U-1	U-1	U-1	U-1	U-1	U-1	U-1
—	—	—	—	—	—	—	—
bit 23							bit 16

R/PO-1	R/PO-1	R/PO-1	R/PO-1	R/PO-1	R/PO-1	R/PO-1	R/PO-1
CPRC<15:8>							
bit 15							bit 8

R/PO-1	R/PO-1	R/PO-1	R/PO-1	R/PO-1	R/PO-1	R/PO-1	R/PO-1
CPRC<7:0>							
bit 7							bit 0

Legend:	PO = Program Once bit		
R = Readable bit	W = Writable bit	U = Unimplemented bit, read as ‘0’	
-n = Value at POR	‘1’ = Bit is set	‘0’ = Bit is cleared	x = Bit is unknown

bit 23-16 **Unimplemented:** Read as ‘1’

bit 15-0 **CPRC<15:0>:** Configure PORTC Ownership bits
1 = Master core owns pin
0 = Slave core owns pin

REGISTER 21-23: FCFGPRD0: PORTD CONFIGURATION REGISTER

U-1	U-1	U-1	U-1	U-1	U-1	U-1	U-1
—	—	—	—	—	—	—	—
bit 23							bit 16

R/PO-1	R/PO-1	R/PO-1	R/PO-1	R/PO-1	R/PO-1	R/PO-1	R/PO-1
CPRD<15:8>							
bit 15							bit 8

R/PO-1	R/PO-1	R/PO-1	R/PO-1	R/PO-1	R/PO-1	R/PO-1	R/PO-1
CPRD<7:0>							
bit 7							bit 0

Legend:	PO = Program Once bit		
R = Readable bit	W = Writable bit	U = Unimplemented bit, read as ‘0’	
-n = Value at POR	‘1’ = Bit is set	‘0’ = Bit is cleared	x = Bit is unknown

bit 23-16 **Unimplemented:** Read as ‘1’

bit 15-0 **CPRD<15:0>:** Configure PORTD Ownership bits
1 = Master core owns pin
0 = Slave core owns pin

REGISTER 21-24: FCFGPRE0: PORTE CONFIGURATION REGISTER

U-1	U-1	U-1	U-1	U-1	U-1	U-1	U-1
—	—	—	—	—	—	—	—
bit 23							bit 16

R/PO-1	R/PO-1	R/PO-1	R/PO-1	R/PO-1	R/PO-1	R/PO-1	R/PO-1
CPRE<15:8>							
bit 15							bit 8

R/PO-1	R/PO-1	R/PO-1	R/PO-1	R/PO-1	R/PO-1	R/PO-1	R/PO-1
CPRE<7:0>							
bit 7							bit 0

Legend:	PO = Program Once bit		
R = Readable bit	W = Writable bit	U = Unimplemented bit, read as ‘0’	
-n = Value at POR	‘1’ = Bit is set	‘0’ = Bit is cleared	x = Bit is unknown

bit 23-16 **Unimplemented:** Read as ‘1’

bit 15-0 **CPRE<15:0>:** Configure PORTE Ownership bits
1 = Master core owns pin
0 = Slave core owns pin

© 2017-2018 Microchip Technology Inc.

REGISTER 21-25: FS1OSCSEL CONFIGURATION REGISTER (SLAVE)

U-1	U-1	U-1	U-1	U-1	U-1	U-1	U-1
—	—	—	—	—	—	—	—
bit 23							bit 16

U-1	U-1	U-1	U-1	U-1	U-1	U-1	U-1
—	—	—	—	—	—	—	—
bit 15							bit 8

R/PO-1	U-1	U-1	U-1	U-1	R/PO-1	R/PO-1	R/PO-1
S1IESO	—	—	—	—	S1FNOSC2	S1FNOSC1	S1FNOSC0
bit 7							bit 0

Legend:	PO = Program Once bit		
R = Readable bit	W = Writable bit	U = Unimplemented bit, read as ‘0’	
-n = Value at POR	‘1’ = Bit is set	‘0’ = Bit is cleared	x = Bit is unknown

bit 23-8 **Unimplemented:** Read as ‘1’

bit 7 **S1IESO:** Internal External Switchover bit
1 = Internal External Switchover mode is enabled (Two-Speed Start-up is enabled)
0 = Internal External Switchover mode is disabled (Two-Speed Start-up is disabled)

bit 6-3 **Unimplemented:** Read as ‘1’

bit 2-0 **S1FNOSC<2:0>:** Oscillator Selection bits
111 = Fast RC Oscillator (FRC) divided by N
110 = Backup FRC (BFRC)
101 = Low-Power RC Oscillator (LPRC)
100 = Reserved
011 = Primary Oscillator with PLL Module (MSPLL, HSPLL, ECPLL)
010 = Primary Oscillator (MS, HS, EC)
001 = Fast RC Oscillator (FRC) with PLL Module (FRCPLL)
000 = Fast RC Oscillator (FRC)

REGISTER 21-26: FS1OSC CONFIGURATION REGISTER (SLAVE)

U-1	U-1	U-1	U-1	U-1	U-1	U-1	U-1
—	—	—	—	—	—	—	—
bit 23							bit 16

U-1	U-1	U-1	U-1	U-1	U-1	U-1	r-1
—	—	—	—	—	—	—	—
bit 15							bit 8

R/PO-1	R/PO-1	U-1	U-1	U-1	R/PO-1	U-1	U-1
S1FCKSM1	S1FCKSM0	—	—	—	S1OSCIOFNC(1)	—	—
bit 7							bit 0

Legend:	PO = Program Once bit	r = Reserved bit	
R = Readable bit	W = Writable bit	U = Unimplemented bit, read as ‘0’	
-n = Value at POR	‘1’ = Bit is set	‘0’ = Bit is cleared	x = Bit is unknown

bit 23-9 **Unimplemented:** Read as ‘1’

bit 8 **Reserved:** Maintain as ‘1’

bit 7-6 **S1FCKSM<1:0>:** Clock Switching and Monitor Selection Configuration bits
1x = Clock switching is disabled, Fail-Safe Clock Monitor is disabled
01 = Clock switching is enabled, Fail-Safe Clock Monitor is disabled
00 = Clock switching is enabled, Fail-Safe Clock Monitor is enabled

bit 5-3 **Unimplemented:** Read as ‘1’

bit 2 **S1OSCIOFNC:** OSCO Pin Function bit (except in XT and HS modes)(1)
1 = OSCO is the clock output
0 = OSCO is the general purpose digital I/O pin

bit 1-0 **Unimplemented:** Read as ‘1’

Note 1: The OSCO pin function is determined by the S1OSCIOFNC Configuration bit. If both the Master core OSCIOFNC and Slave core S1OSCIOFNC bits are set, the Master core OSCIOFNC bit has priority.

© 2017-2018 Microchip Technology Inc.

REGISTER 21-27: FS1WDT CONFIGURATION REGISTER (SLAVE)

U-1	U-1	U-1	U-1	U-1	U-1	U-1	U-1
—	—	—	—	—	—	—	—
bit 23							bit 16

R/PO-1	R/PO-1	R/PO-1	R/PO-1	R/PO-1	R/PO-1	R/PO-1	R/PO-1
S1FWDTEN	S1SWDTPS4	S1SWDTPS3	S1SWDTPS2	S1SWDTPS1	S1SWDTPS0	S1WDTWIN1	S1WDTWIN0
bit 15							bit 8

R/PO-1	R/PO-1	R/PO-1	R/PO-1	R/PO-1	R/PO-1	R/PO-1	R/PO-1
S1WINDIS	S1RCLKSEL1	S1RCLKSEL0	S1RWDTPS4	S1RWDTPS3	S1RWDTPS2	S1RWDTPS1	S1RWDTPS0
bit 7							bit 0

Legend:	PO = Program Once bit		
R = Readable bit	W = Writable bit	U = Unimplemented bit, read as ‘0’	
-n = Value at POR	‘1’ = Bit is set	‘0’ = Bit is cleared	x = Bit is unknown

bit 23-16 **Unimplemented:** Read as ‘1’

bit 15 **S1FWDTEN:** Watchdog Timer Enable bit
1 = WDT is enabled in hardware
0 = WDT is controlled via the ON (WDTCONL<15>) bit

bit 14-10 **S1SWDTPS<4:0>:** Sleep Mode Watchdog Timer Period Select bits

bit 9-8 **S1WDTWIN<1:0>:** Watchdog Window Select bits
11 = WDT window is 25% of WDT period
10 = WDT window is 37.5% of WDT period
01 = WDT window is 50% of WDT period
00 = WDT window is 75% of WDT period

bit 7 **S1WINDIS:** Windowed Watchdog Timer Disable bit
1 = Standard WDT is selected; windowed WDT is disabled
0 = Windowed WDT is enabled

bit 6-5 **S1RCLKSEL<1:0>:** Watchdog Timer Clock Select bits
11 = LPRC
10 = Uses FRC when S1WINDIS = 0, system clock is not INTOSC/LPRC and the device is not in Sleep; otherwise, uses INTOSC/LPRC
01 = Uses the peripheral clock when the system clock is not INTOSC/LPRC and the device is not in Sleep; otherwise, uses INTOSC/LPRC
00 = Reserved

bit 4-0 **S1RWDTPS<4:0>:** Run Mode Watchdog Timer Period Select bits

REGISTER 21-28: FS1POR CONFIGURATION REGISTER (SLAVE)

U-1	U-1	U-1	U-1	U-1	U-1	U-1	U-1
—	—	—	—	—	—	—	—
bit 23							bit 16

U-1	U-1	U-1	U-1	U-1	U-1	U-1	U-1
—	—	—	—	—	—	—	—
bit 15							bit 8

U-1	U-1	U-1	U-1	U-1	U-1	U-1	U-1
—	—	—	—	—	—	—	—
bit 7							bit 0

Legend:	PO = Program Once bit		
R = Readable bit	W = Writable bit	U = Unimplemented bit, read as ‘0’	
-n = Value at POR	‘1’ = Bit is set	‘0’ = Bit is cleared	x = Bit is unknown

bit 23-0 **Unimplemented:** Read as ‘1’

© 2017-2018 Microchip Technology Inc.

REGISTER 21-29: FS1ICD CONFIGURATION REGISTER (SLAVE)

U-1	U-1	U-1	U-1	U-1	U-1	U-1	U-1
—	—	—	—	—	—	—	—
bit 23							bit 16

RP/O-1	U-1	R/PO-1	U-1	U-1	U-1	U-1	U-1
S1NOBTSWP	—	S1ISOLAT	—	—	—	—	—
bit 15							bit 8

r-1	U-1	U-1	U-1	U-1	U-1	R/PO-1	R/PO-1
—	—	—	—	—	—	S1ICS1	S1ICS0
bit 7							bit 0

Legend:	PO = Program Once bit	r = Reserved bit	
R = Readable bit	W = Writable bit	U = Unimplemented bit, read as ‘0’	
-n = Value at POR	‘1’ = Bit is set	‘0’ = Bit is cleared	x = Bit is unknown

bit 23-16 **Unimplemented:** Read as ‘1’

bit 15 **S1NOBTSWP:** BOOTSWP Instruction Disable bit
1 = BOOTSWP instruction is disabled
0 = BOOTSWP instruction is enabled

bit 14 **Unimplemented:** Read as ‘1’

bit 13 **S1ISOLAT:** Slave Core Isolation bit
1 = The Slave can operate (in Debug mode), even if the SLVEN bit in the MSI is zero
0 = The Slave can only operate if the SLVEN bit in the MSI is set

bit 12-8 **Unimplemented:** Read as ‘1’

bit 7 **Reserved:** Maintain as ‘1’

bit 6-2 **Unimplemented:** Read as ‘1’

bit 1-0 **S1ICS<1:0>:** ICD Pin Placement Select bits
11 = Slave ICD pins are S1PGC1/S1PGD1/$\overline{\text{S1MCLR1}}$
10 = Slave ICD pins are S1PGC2/S1PGD2/$\overline{\text{S1MCLR2}}$
01 = Slave ICD pins are S1PGC3/S1PGD3/$\overline{\text{S1MCLR3}}$
00 = None ($\overline{\text{S1MCLR1}}$ pin is released and can be used as a regular I/O)

REGISTER 21-30: FS1DEVOPT CONFIGURATION REGISTER (SLAVE)

U-1	U-1	U-1	U-1	U-1	U-1	U-1	U-1
—	—	—	—	—	—	—	—
bit 23							bit 16

R/PO-1	R/PO-1	R/PO-1	U-1	U-1	U-1	U-1	U-1
S1MSRE	S1SSRE	S1SPI1PIN(1)	—	—	—	—	—
bit 15							bit 8

U-1	U-1	U-1	U-1	R/PO-1	U-1	U-1	U-1
—	—	—	—	S1ALTI2C1	—	—	—
bit 7							bit 0

Legend:	PO = Program Once bit		
R = Readable bit	W = Writable bit	U = Unimplemented bit, read as ‘0’	
-n = Value at POR	‘1’ = Bit is set	‘0’ = Bit is cleared	x = Bit is unknown

bit 23-16 **Unimplemented:** Read as ‘1’

bit 15 **S1MSRE:** Master Slave Reset Enable bit
- 1 = The Master software-oriented Reset events (Reset Opcode, Watchdog Timer Time-out Reset, Trap Reset, Illegal Instruction Reset) will also cause the Slave subsystem to reset
- 0 = The Master software-oriented Reset events (Reset Opcode, Watchdog Timer Time-out Reset, Trap Reset, Illegal Instruction Reset) will not cause the Slave subsystem to reset

bit 14 **S1SSRE:** Slave Reset Enable bit
- 1 = Slave generated Resets will reset the Slave enable bit in the MSI module
- 0 = Slave generated Resets will not reset the Slave enable bit in the MSI module

bit 13 **S1SPI1PIN:** Slave SPI1 Fast I/O Pad Disable bit(1)
- 1 = Slave SPI1 uses PPS (I/O remap) to make connects with device pins
- 0 = Slave SPI1 uses direct connections with specified device pins

bit 12-4 **Unimplemented:** Read as ‘1’

bit 3 **S1ALTI2C1:** Alternate I2C1 Pin Mapping bit
- 1 = Default location for SCL1/SDA1 pins
- 0 = Alternate location for SCL1/SDA1 pins (ASCL1/ASDA1)

bit 2-0 **Unimplemented:** Read as ‘1’

Note 1: Fixed pin option is only available for higher pin packages (48-pin, 64-pin and 80-pin).

© 2017-2018 Microchip Technology Inc.

REGISTER 21-31: FS1ALTREG CONFIGURATION REGISTER (SLAVE)

U-1	U-1	U-1	U-1	U-1	U-1	U-1	U-1
—	—	—	—	—	—	—	—
bit 23							bit 16

U-1	R/PO-1	R/PO-1	R/PO-1	U-1	R/PO-1	R/PO-1	R/PO-1
—	S1CTXT4<2:0>			—	S1CTXT3<2:0>		
bit 15							bit 8

U-1	R/PO-1	R/PO-1	R/PO-1	U-1	R/PO-1	R/PO-1	R/PO-1
—	S1CTXT2<2:0>			—	S1CTXT1<2:0>		
bit 7							bit 0

Legend:	PO = Program Once bit		
R = Readable bit	W = Writable bit	U = Unimplemented bit, read as ‘0’	
-n = Value at POR	‘1’ = Bit is set	‘0’ = Bit is cleared	x = Bit is unknown

bit 23-15 **Unimplemented:** Read as ‘1’

bit 14-12 **S1CTXT4<2:0>:** Alternate Working Register Set #4 Interrupt Priority Level Selection bits
111 = Not assigned
110 = Alternate Register Set #4 is assigned to IPL Level 7
101 = Alternate Register Set #4 is assigned to IPL Level 6
100 = Alternate Register Set #4 is assigned to IPL Level 5
011 = Alternate Register Set #4 is assigned to IPL Level 4
010 = Alternate Register Set #4 is assigned to IPL Level 3
001 = Alternate Register Set #4 is assigned to IPL Level 2
000 = Alternate Register Set #4 is assigned to IPL Level 1

bit 11 **Unimplemented:** Read as ‘1’

bit 10-8 **S1CTXT3<2:0>:** Alternate Working Register Set #3 Interrupt Priority Level Selection bits
111 = Not assigned
110 = Alternate Register Set #3 is assigned to IPL Level 7
101 = Alternate Register Set #3 is assigned to IPL Level 6
100 = Alternate Register Set #3 is assigned to IPL Level 5
011 = Alternate Register Set #3 is assigned to IPL Level 4
010 = Alternate Register Set #3 is assigned to IPL Level 3
001 = Alternate Register Set #3 is assigned to IPL Level 2
000 = Alternate Register Set #3 is assigned to IPL Level 1

bit 7 **Unimplemented:** Read as ‘1’

bit 6-4 **S1CTXT2<2:0>:** Alternate Working Register Set #2 Interrupt Priority Level Selection bits
111 = Not assigned
110 = Alternate Register Set #2 is assigned to IPL Level 7
101 = Alternate Register Set #2 is assigned to IPL Level 6
100 = Alternate Register Set #2 is assigned to IPL Level 5
011 = Alternate Register Set #2 is assigned to IPL Level 4
010 = Alternate Register Set #2 is assigned to IPL Level 3
001 = Alternate Register Set #2 is assigned to IPL Level 2
000 = Alternate Register Set #2 is assigned to IPL Level 1

bit 3 **Unimplemented:** Read as ‘1’

REGISTER 21-31: FS1ALTREG CONFIGURATION REGISTER (SLAVE) (CONTINUED)

bit 2-0 **S1CTXT1<2:0>:** Alternate Working Register Set #1 Interrupt Priority Level Selection bits

`111` = Not assigned
`110` = Alternate Register Set #1 is assigned to IPL Level 7
`101` = Alternate Register Set #1 is assigned to IPL Level 6
`100` = Alternate Register Set #1 is assigned to IPL Level 5
`011` = Alternate Register Set #1 is assigned to IPL Level 4
`010` = Alternate Register Set #1 is assigned to IPL Level 3
`001` = Alternate Register Set #1 is assigned to IPL Level 2
`000` = Alternate Register Set #1 is assigned to IPL Level 1

© 2017-2018 Microchip Technology Inc.

21.2 Device Calibration and Identification

The PGAx and current source modules on the dsPIC33CH128MP508 family devices require Calibration Data registers to improve performance of the module over a wide operating range. These Calibration registers are read-only and are stored in configuration memory space. Prior to enabling the module, the calibration data must be read (TBLPAG and Table Read instruction) and loaded into their respective SFR registers. The device calibration addresses are shown in Table 21-4.

The dsPIC33CH128MP508 devices have two Identification registers, near the end of configuration memory space, that store the Device ID (DEVID) and Device Revision (DEVREV). These registers are used to determine the mask, variant and manufacturing information about the device. These registers are read-only and are shown in Register 21-32 and Register 21-33.

TABLE 21-4: DEVICE CALIBRATION ADDRESSES(1)

Calibration Name	Address	Bits 23-16	Bit 15	Bit 14	Bit 13	Bit 12	Bit 11	Bit 10	Bit 9	Bit 8	Bit 7	Bit 6	Bit 5	Bit 4	Bit 3	Bit 2	Bit 1	Bit 0
PGA1CAL	0xF8001C	—	—	—	—	—	—	—	—	—	PGA1 Calibration Data							
PGA2CAL	0xF8001E	—	—	—	—	—	—	—	—	—	PGA2 Calibration Data							
PGA3CAL	0xF80020	—	—	—	—	—	—	—	—	—	PGA3 Calibration Data							
ISRCCAL	0xF80012	—	—	—	—	—	—	—	—	—	—	—	Current Source Calibration Data					

Note 1: The calibration data must be copied into its respective registers prior to enabling the module.

REGISTER 21-32: DEVREV: DEVICE REVISION REGISTER

R	R	R	R	R	R	R	R
DEVREV<23:16>							
bit 23							bit 16

R	R	R	R	R	R	R	R
DEVREV<15:8>							
bit 15							bit 8

R	R	R	R	R	R	R	R
DEVREV<7:0>							
bit 7							bit 0

Legend:	R = Read-only bit	U = Unimplemented bit

bit 23-0 **DEVREV<23:0>:** Device Revision bits

REGISTER 21-33: DEVID: DEVICE ID REGISTERS

U-1	U-1	U-1	U-1	U-1	U-1	U-1	U-1
—	—	—	—	—	—	—	—
bit 23							bit 16

R	R	R	R	R	R	R	R
FAMID7	FAMID6	FAMID5	FAMID4	FAMID3	FAMID2	FAMID1	FAMID0
bit 15							bit 8

R	R	R	R	R	R	R	R
DEV7(1)	DEV6(1)	DEV5(1)	DEV4(1)	DEV3(1)	DEV2(1)	DEV1(1)	DEV0(1)
bit 7							bit 0

Legend:	R = Read-only bit	U = Unimplemented bit

bit 23-16 **Unimplemented:** Read as ‘1’

bit 15-8 **FAMID<7:0>:** Device Family Identifier bits
`1000 0111` = dsPIC33CH128MP508 family

bit 7-0 **DEV<7:0>:** Individual Device Identifier bits(1)

Note 1: See Table 21-5 for the list of Device Identifier bits.

© 2017-2018 Microchip Technology Inc.

TABLE 21-5: DEVICE VARIANTS

DEVID<7:0>	Device Name	Core
Devices with CAN FD		
0x40	dsPIC33CH64MP502	Master
0xC0	dsPIC33CH64MP502S1	Slave
0x50	dsPIC33CH128MP502	Master
0xD0	dsPIC33CH128MP502S1	Slave
0x41	dsPIC33CH64MP503	Master
0xC1	dsPIC33CH64MP503S1	Slave
0x51	dsPIC33CH128MP503	Master
0xD1	dsPIC33CH128MP503S1	Slave
0x42	dsPIC33CH64MP505	Master
0xC2	dsPIC33CH64MP505S1	Slave
0x52	dsPIC33CH128MP505	Master
0xD2	dsPIC33CH128MP505S1	Slave
0x43	dsPIC33CH64MP506	Master
0xC3	dsPIC33CH64MP506S1	Slave
0x53	dsPIC33CH128MP506	Master
0xD3	dsPIC33CH128MP506S1	Slave
0x44	dsPIC33CH64MP508	Master
0xC4	dsPIC33CH64MP508S1	Slave
0x54	dsPIC33CH128MP508	Master
0xD4	dsPIC33CH128MP508S1	Slave

© 2017-2018 Microchip Technology Inc.

TABLE 21-5: DEVICE VARIANTS (CONTINUED)

DEVID<7:0>	Device Name	Core
Devices without CAN FD		
0x00	dsPIC33CH64MP202	Master
0x80	dsPIC33CH64MP202S1	Slave
0x10	dsPIC33CH128MP202	Master
0x90	dsPIC33CH128MP202S1	Slave
0x01	dsPIC33CH64MP203	Master
0x81	dsPIC33CH64MP203S1	Slave
0x11	dsPIC33CH128MP203	Master
0x91	dsPIC33CH128MP203S1	Slave
0x02	dsPIC33CH64MP205	Master
0x82	dsPIC33CH64MP205S1	Slave
0x12	dsPIC33CH128MP205	Master
0x92	dsPIC33CH128MP205S1	Slave
0x03	dsPIC33CH64MP206	Master
0x83	dsPIC33CH64MP206S1	Slave
0x13	dsPIC33CH128MP206	Master
0x93	dsPIC33CH128MP206S1	Slave
0x04	dsPIC33CH64MP208	Master
0x84	dsPIC33CH64MP208S1	Slave
0x14	dsPIC33CH128MP208	Master
0x94	dsPIC33CH128MP208S1	Slave

© 2017-2018 Microchip Technology Inc.

21.3 User OTP Memory

The dsPIC33CH128MP508 family devices contain 64 One-Time-Programmable (OTP) double words, located at addresses, 801700h through 8017FEh. Each 48-bit OTP double word can only be written one time. The OTP Words can be used for storing checksums, code revisions, manufacturing dates, manufacturing lot numbers or any other application-specific information.

The OTP area is not cleared by any erase command. This memory can be written only once.

21.4 On-Chip Voltage Regulators

All of the dsPIC33CH128MP508 family devices have a capacitorless, internal voltage regulator to supply power to the core at 1.2V (typical). A pair of voltage regulators, VREG1 and VREG2 together, provide power for the core. The PLL is powered using a separate regulator, VREGPLL, as shown in Figure 21-1.

FIGURE 21-1: INTERNAL REGULATOR

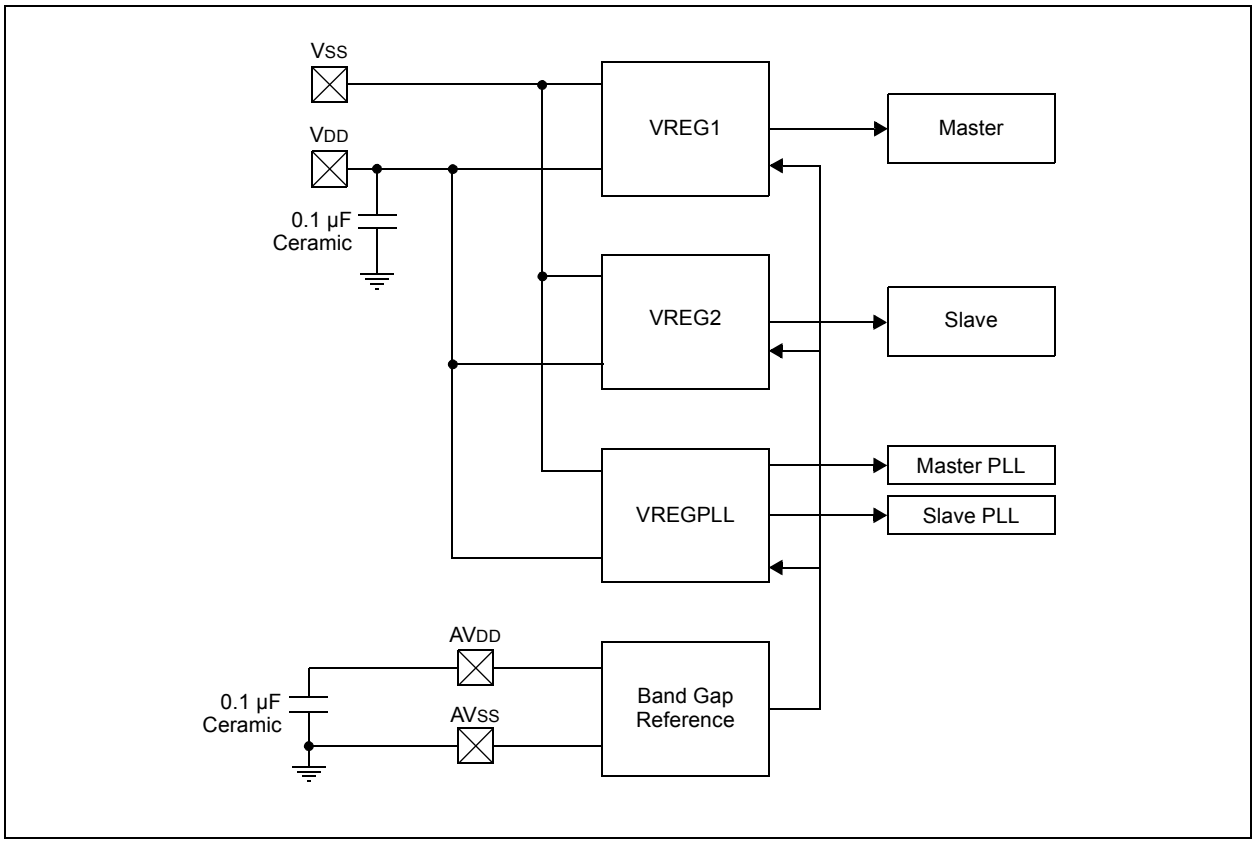

21.5 Regulator Control and Sleep Mode

As shown in Figure 21-1, both VREG1 and VREG2 together, share the total load for the Master and Slave.

The PLL for the Master and Slave is powered using a separate regulator, as shown for VREG3 (VREGPLL). The output voltages of these regulators can be controlled by the user, which gives eligibility to save power during Sleep mode.

As shown in Register 21-34, there are two control bits, VREGxOV<1:0>, to control the output voltages of these regulators. VREGCON<15> should be set to put the regulator in Low-Power mode before going to Sleep.

Before going to Sleep, the voltage regulator should be changed to 1V (or 0.8V). The voltage regulators communicate to the Slave or Master depending on the scenario below.

REGISTER 21-34: VREGCON: VOLTAGE REGULATOR CONTROL REGISTER

r-0	U-0	U-0	U-0	U-0	U-0	U-0	U-0
—	—	—	—	—	—	—	—
bit 15							bit 8

U-0	U-0	R/W-0	R/W-0	R/W-0	R/W-0	R/W-0	R/W-0
—	—	VREG3OV1	VREG3OV0	VREG2OV1	VREG2OV0	VREG1OV1	VREG1OV0
bit 7							bit 0

Legend:	r = Reserved bit		
R = Readable bit	W = Writable bit	U = Unimplemented bit, read as ‘0’	
-n = Value at POR	‘1’ = Bit is set	‘0’ = Bit is cleared	x = Bit is unknown

bit 15 **Reserved:** Maintain as ‘0’

bit 14-6 **Unimplemented:** Read as ‘0’

bit 5-4 **VREG3OV<1:0>:** Low-Power Mode Enable bits
11/00 = V_{OUT} = 1.5 * V_{BG} = 1.2V
10 = V_{OUT} = 1.25 * V_{BG} = 1.0V
01 = V_{OUT} = V_{BG} = 0.8V

bit 3-2 **VREG2OV<1:0>:** Low-Power Mode Enable bits
11/00 = V_{OUT} = 1.5 * V_{BG} = 1.2V
10 = V_{OUT} = 1.25 * V_{BG} = 1.0V
01 = V_{OUT} = V_{BG} = 0.8V

bit 1-0 **VREG1OV<1:0>:** Low-Power Mode Enable bits
11/00 = V_{OUT} = 1.5 * V_{BG} = 1.2V
10 = V_{OUT} = 1.25 * V_{BG} = 1.0V
01 = V_{OUT} = V_{BG} = 0.8V

© 2017-2018 Microchip Technology Inc.

21.6 Brown-out Reset (BOR)

The Brown-out Reset (BOR) module is based on an internal voltage reference circuit that monitors the regulated supply voltage. The main purpose of the BOR module is to generate a device Reset when a brown-out condition occurs. Brown-out conditions are generally caused by glitches on the AC mains (for example, missing portions of the AC cycle waveform due to bad power transmission lines or voltage sags due to excessive current draw when a large inductive load is turned on).

A BOR generates a Reset pulse which resets the device. The BOR selects the clock source based on the device Configuration bit selections.

If an Oscillator mode is selected, the BOR activates the Oscillator Start-up Timer (OST). The system clock is held until OST expires. If the PLL is used, the clock is held until the LOCK bit (OSCCON<5>) is '1'.

Concurrently, the PWRT Time-out (T_{PWRT}) is applied before the internal Reset is released. If T_{PWRT} = 0 and a crystal oscillator is being used, then a nominal delay of T_{FSCM} is applied. The total delay in this case is T_{FSCM}. Refer to Parameter SY35 in Table 24-32 of **Section 24.0 "Electrical Characteristics"** for specific T_{FSCM} values.

The BOR status bit (RCON<1>) is set to indicate that a BOR has occurred. The BOR circuit continues to operate while in Sleep or Idle mode and resets the device should V_{DD} fall below the BOR threshold voltage.

21.7 Dual Watchdog Timer (WDT)

Note 1: This data sheet summarizes the features of the dsPIC33CH128MP508 family of devices. It is not intended to be a comprehensive reference source. To complement the information in this data sheet, refer to **"Dual Watchdog Timer",** (DS70005250) in the *"dsPIC33/PIC24 Family Reference Manual"*, which is available from the Microchip web site (www.microchip.com).

2: The WDT is identical for both Master core and Slave core. The x is common for both Master core and Slave core (where the x represents the number of the specific module being addressed). The number of WDT modules available on the Master and Slaves is different and they are located in different SFR locations.

3: All associated register names are the same on the Master core and the Slave core. The Slave code will be developed in a separate project in MPLAB® X IDE with the device selection, dsPIC33CH128MP508**S1**, where the **S1** indicates the Slave device.

Table 21-6 shows an overview of the WDT module.

TABLE 21-6: DUAL WDT MODULE OVERVIEW

	Number of WDT Modules	Identical (Modules)
Master Core	1	Yes
Slave Core	1	Yes

The dsPIC33 dual Watchdog Timer (WDT) is described in this section. Refer to Figure 21-2 for a block diagram of the WDT.

The WDT, when enabled, operates from the internal Low-Power RC (LPRC) Oscillator clock source or a selectable clock source in Run mode. The WDT can be used to detect system software malfunctions by resetting the device if the WDT is not cleared periodically in software. The WDT can be configured in Windowed mode or Non-Windowed mode. Various WDT time-out periods can be selected using the WDT postscaler. The WDT can also be used to wake the device from Sleep or Idle mode (Power Save mode). If the WDT expires and issues a device Reset, the WTDO bit of the RCON register (Register 21-37) will be set.

The following are some of the key features of the WDT modules:

- Configuration or Software Controlled
- Separate User-Configurable Time-out Periods for Run and Sleep/Idle
- Can Wake the Device from Sleep or Idle
- User-Selectable Clock Source in Run mode
- Operates from LPRC in Sleep/Idle mode

Note: While executing a clock switch, the WDT will not be reset. It is recommended to reset the WDT prior to executing a clock switch instruction.

© 2017-2018 Microchip Technology Inc.

FIGURE 21-2: WATCHDOG TIMER BLOCK DIAGRAM

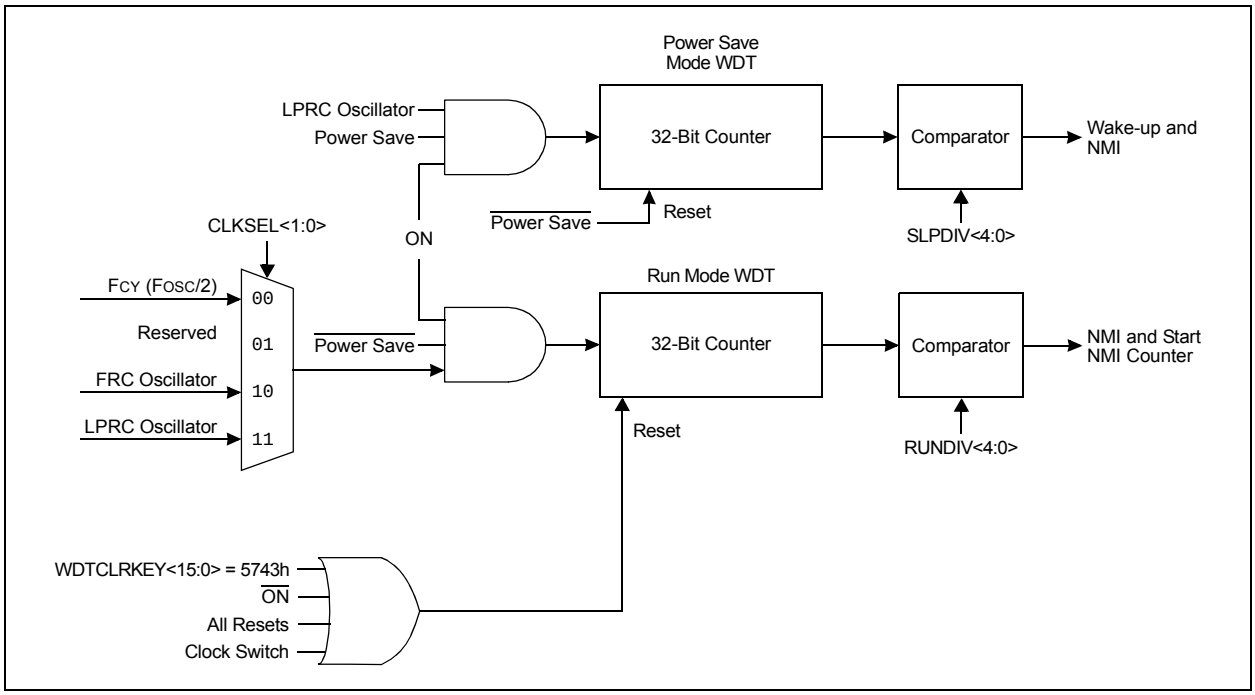

21.8 Watchdog Timer Control Registers

REGISTER 21-35: WDTCONL: WATCHDOG TIMER CONTROL REGISTER LOW

R/W-0	U-0	U-0	R-y	R-y	R-y	R-y	R-y
ON(1,2)	—	—	RUNDIV4(3)	RUNDIV3(3)	RUNDIV2(3)	RUNDIV1(3)	RUNDIV0(3)
bit 15							bit 8

R	R	R-y	R-y	R-y	R-y	R-y	HS/R/W-0
CLKSEL1(3,5)	CLKSEL0(3,5)	SLPDIV4(3)	SLPDIV3(3)	SLPDIV2(3)	SLPDIV1(3)	SLPDIV0(3)	WDTWINEN(4)
bit 7							bit 0

Legend:	HS = Hardware Settable bit	y = Value from Configuration bit on POR	
R = Readable bit	W = Writable bit	U = Unimplemented bit, read as ‘0’	
-n = Value at POR	‘1’ = Bit is set	‘0’ = Bit is cleared	x = Bit is unknown

bit 15 **ON:** Watchdog Timer Enable bit(1,2)
`1` = Enables the Watchdog Timer if it is not enabled by the device configuration
`0` = Disables the Watchdog Timer if it was enabled in software

bit 14-13 **Unimplemented:** Read as ‘`0`’

bit 12-8 **RUNDIV<4:0>:** WDT Run Mode Postscaler Status bits(3)

bit 7-6 **CLKSEL<1:0>:** WDT Run Mode Clock Select Status bits(3,5)
`11` = LPRC Oscillator
`10` = FRC Oscillator
`01` = Reserved
`00` = FCY (FOSC/2)

bit 5-1 **SLPDIV<4:0>:** Sleep and Idle Mode WDT Postscaler Status bits(3)

bit 0 **WDTWINEN:** Watchdog Timer Window Enable bit(4)
`1` = Enables Window mode
`0` = Disables Window mode

Note 1: A read of this bit will result in a ‘`1`’ if the WDT is enabled by the device configuration or by software.
2: The user’s software should not read or write to the peripheral’s SFRs in the SYSCLK cycle immediately following the instruction that clears the module’s ON bit.
3: These bits reflect the value of the Configuration bits.
4: The WDTWINEN bit reflects the status of the Configuration bit if the bit is set. If the bit is cleared, the value is controlled by software.
5: The available clock sources are device-dependent.

© 2017-2018 Microchip Technology Inc.

REGISTER 21-36: WDTCONH: WATCHDOG TIMER CONTROL REGISTER HIGH

W-0	W-0	W-0	W-0	W-0	W-0	W-0	W-0
WDTCLRKEY<15:8>							
bit 15							bit 8

W-0	W-0	W-0	W-0	W-0	W-0	W-0	W-0
WDTCLRKEY<7:0>							
bit 7							bit 0

Legend:			
R = Readable bit	W = Writable bit	U = Unimplemented bit, read as ‘0’	
-n = Value at POR	‘1’ = Bit is set	‘0’ = Bit is cleared	x = Bit is unknown

bit 15-0 **WDTCLRKEY<15:0>:** Watchdog Timer Clear Key bits

To clear the Watchdog Timer to prevent a time-out, software must write the value, 0x5743, to this location using a single 16-bit write.

REGISTER 21-37: RCON: RESET CONTROL REGISTER[1]

R/W-0	R/W-0	U-0	U-0	U-0	U-0	R/W-0	R/W-0
TRAPR	IOPUWR	—	—	—	—	CM	VREGS
bit 15							bit 8

R/W-0	R/W-0	U-0	R/W-0	R/W-0	R/W-0	R/W-1	R/W-1
EXTR	SWR	—	WDTO	SLEEP	IDLE	BOR	POR
bit 7							bit 0

Legend:			
R = Readable bit	W = Writable bit	U = Unimplemented bit, read as ‘0’	
-n = Value at POR	‘1’ = Bit is set	‘0’ = Bit is cleared	x = Bit is unknown

bit 15 **TRAPR:** Trap Reset Flag bit
1 = A Trap Conflict Reset has occurred
0 = A Trap Conflict Reset has not occurred

bit 14 **IOPUWR:** Illegal Opcode or Uninitialized W Register Access Reset Flag bit
1 = An illegal opcode detection, an illegal address mode or Uninitialized W register used as an Address Pointer caused a Reset
0 = An Illegal Opcode or Uninitialized W register Reset has not occurred

bit 13-10 **Unimplemented:** Read as ‘0’

bit 9 **CM:** Configuration Mismatch Flag bit
1 = A Configuration Mismatch Reset has occurred
0 = A Configuration Mismatch Reset has not occurred

bit 8 **VREGS:** Voltage Regulator Standby During Sleep bit
1 = Voltage regulator is active during Sleep
0 = Voltage regulator goes into Standby mode during Sleep

bit 7 **EXTR:** External Reset ($\overline{\text{MCLR}}$) Pin bit
1 = A Master Clear (pin) Reset has occurred
0 = A Master Clear (pin) Reset has not occurred

bit 6 **SWR:** Software RESET (instruction) Flag bit
1 = A RESET instruction has been executed
0 = A RESET instruction has not been executed

bit 5 **Unimplemented:** Read as ‘0’

bit 4 **WDTO:** Watchdog Timer Time-out Flag bit
1 = WDT time-out has occurred
0 = WDT time-out has not occurred

bit 3 **SLEEP:** Wake from Sleep Flag bit
1 = Device was in Sleep mode
0 = Device was not in Sleep mode

bit 2 **IDLE:** Wake from Idle Flag bit
1 = Device was in Idle mode
0 = Device was not in Idle mode

bit 1 **BOR:** Brown-out Reset Flag bit
1 = Brown-out Reset has occurred
0 = Brown-out Reset has not occurred

Note 1: All of the Reset status bits can be set or cleared in software. Setting one of these bits in software does not cause a device Reset.

© 2017-2018 Microchip Technology Inc.

REGISTER 21-37: RCON: RESET CONTROL REGISTER(1) (CONTINUED)

bit 0 **POR:** Power-on Reset Flag bit
`1` = Power-on Reset has occurred
`0` = Power-on Reset has not occurred

Note 1: All of the Reset status bits can be set or cleared in software. Setting one of these bits in software does not cause a device Reset.

21.9 JTAG Interface

The dsPIC33CH128MP508 family devices implement a JTAG interface, which supports boundary scan device testing. Detailed information on this interface will be provided in future revisions of this document.

Note: Refer to **"Programming and Diagnostics"** (DS70608) in the *"dsPIC33/PIC24 Family Reference Manual"* for further information on usage, configuration and operation of the JTAG interface.

21.10 In-Circuit Serial Programming™ (ICSP™)

The dsPIC33CH128MP508 family devices can be serially programmed while in the end application circuit. This is done with two lines for clock and data, and three other lines for power, ground and the programming sequence. Serial programming allows customers to manufacture boards with unprogrammed devices and then program the device just before shipping the product. Serial programming also allows the most recent firmware or a custom firmware to be programmed. Refer to the *"dsPIC33CH128MP508 Family Flash Programming Specification"* (DS70005285) for details about In-Circuit Serial Programming (ICSP).

Any of the three pairs of programming clock/data pins can be used:

- PGC1 and PGD1
- PGC2 and PGD2
- PGC3 and PGD3

Note: Both Master core and Slave core can be used with MPLAB® ICD to debug at the same time. There are PGCx and PGDx pins dedicated for the Master core and Slave core (S1PGCx and S1PGDx) to make this possible. $\overline{\text{MCLR}}$ is the same for programming the Master core and the Slave core. $\overline{\text{S1MCLRx}}$ is used only when the Master and Slave are debugged simultaneously.

21.11 In-Circuit Debugger

When MPLAB® ICD 3 or the REAL ICE™ emulator is selected as a debugger, the in-circuit debugging functionality is enabled. This function allows simple debugging functions when used with MPLAB IDE. Debugging functionality is controlled through the PGCx (Emulation/Debug Clock) and PGDx (Emulation/Debug Data) pin functions.

Any of the three pairs of debugging clock/data pins can be used:

- PGC1 and PGD1 Master Debug or Slave Debug
- PGC2 and PGD2 Master Debug or Slave Debug
- PGC3 and PGD3 Master Debug or Slave Debug for debugging Master and Slave simultaneously, two MPLAB ICD debuggers or the REAL ICE™ emulator are required. This mode of debugging, where the Master and Slave are simultaneously debugged, is called the Dual Debug mode. $\overline{\text{S1MCLRx}}$ and S1PGCx/S1PGDx are used only in Dual Debug mode.

The Dual Debug mode of operation needs the following PGCx/PGDx pins:

- $\overline{\text{MCLR}}$, PGC1 and PGD1 for Master Debug, and $\overline{\text{S1MCLR1}}$, S1PGC1 and S1PGD1 for Slave Debug
- $\overline{\text{MCLR}}$, PGC2 and PGD2 for Master Debug, and $\overline{\text{S1MCLR2}}$, S1PGC2 and S1PGD2 for Slave Debug
- $\overline{\text{MCLR}}$, PGC3 and PGD3 for Master Debug, and $\overline{\text{S1MCLR3}}$, S1PGC3 and S1PGD3 for Slave Debug

To use the in-circuit debugger function of the device, the design must implement ICSP connections to $\overline{\text{MCLR}}$, V_{DD}, V_{SS} and the PGCx/PGDx pin pair. In addition, when the feature is enabled, some of the resources are not available for general use. These resources include the first 80 bytes of data RAM and two or five (in Dual Debug) I/O pins (PGCx and PGDx).

There are three modes of debugging the dual core family of dsPIC33CH128MP508:

1. Master Only Debug
2. Slave Only Debug
3. Dual Debug

21.11.1 MASTER ONLY DEBUG

In Master Only Debug, only the Master project will be debugged. There is no project for Slave or no Slave code. The main project will be for dsPIC33CHXXXMP50X/20X and the user has to use $\overline{\text{MCLR}}$ and PGCx/PGDx for debugging. This is similar to debugging any single core existing device.

© 2017-2018 Microchip Technology Inc.

21.11.2 SLAVE ONLY DEBUG

In the Slave Only Debug mode, the user will need two projects. One project is the Master project with dsPIC33CHXXXMP50X/20X as the device. This is called a Master Stub and is required to provide the configuration information to the Slave. The Slave does not have its own Configuration bits. The Configuration bits reside in the Master Flash. The Master Stub will be small code used to provide the Configuration bits for the Slave. The Master Stub is first programed to the Master Flash using MCLR, PGCx and PGDx.

Once the Master Stub is programmed in the Master Flash, the user has to open a new project with dsPIC33CHXXXMP50X/20XS1 (the S1 indicates the Slave device). The same MCLR and PGCx/PGDx, or different PGCx/PGDx, can be used for debugging the Slave. Now the Slave can be debugged like any other single core device.

21.11.3 DUAL DEBUG (BOTH MASTER AND SLAVE ARE DEBUGGED)

In this Debug mode, two debug tools are required: one for Master and one for Slave.

In the Dual Debug mode, the user needs two projects. One project is the Master project with dsPIC33CHXXXMP50X/20X as the device. Configuration bits for the Master, as well as the Slave, will be part of this project. The S1ISOLAT bit can be set and the Master project can be debugged like any other existing single core device. The Master can be debugged using MCLR, PGCx and PGDx.

Once the Master has started the debug process, the user has to open a new project with dsPIC33CHXXXMP50X/20XS1 (the S1 indicates the Slave device). Connect the project using S1MCLRx and S1PGCx/S1PGDx, and start debugging the Slave project.

21.12 Code Protection and CodeGuard™ Security – Master Flash

dsPIC33CH128MP508 family devices offer multiple levels of security for protecting individual intellectual property. The program Flash protection can be broken up into three segments: Boot Segment (BS), General Segment (GS) and Configuration Segment (CS). Boot Segment has the highest security privilege and can be thought to have limited restrictions when accessing other segments. General Segment has the least security and is intended for the end user system code. Configuration Segment contains only the device user configuration data, which is located at the end of the program memory space.

The code protection features are controlled by the Configuration registers, FSEC and FBSLIM. The FSEC register controls the code-protect level for each segment and if that segment is write-protected. The size of BS and GS will depend on the BSLIM<12:0> bits setting and if the Alternate Interrupt Vector Table (AIVT) is enabled. The BSLIM<12:0> bits define the number of pages for BS with each page containing 1024 IW. The smallest BS size is one page, which will consist of the Interrupt Vector Table (IVT) and 512 IW of code protection.

If the AIVT is enabled, the last page of BS will contain the AIVT and will not contain any BS code. With AIVT enabled, the smallest BS size is now two pages (2048 IW), with one page for the IVT and BS code, and the other page for the AIVT. Write protection of the BS does not cover the AIVT. The last page of BS can always be programmed or erased by BS code. The General Segment will start at the next page and will consume the rest of program Flash, except for the Flash Configuration Words. The IVT will assume GS security only if BS is not enabled. The IVT is protected from being programmed or page erased when either security segment has enabled write protection.

The different device security segments are shown in Figure 21-3. Here, all three segments are shown, but are not required. If only basic code protection is required, then GS can be enabled independently or combined with CS, if desired.

FIGURE 21-3: SECURITY SEGMENTS EXAMPLE

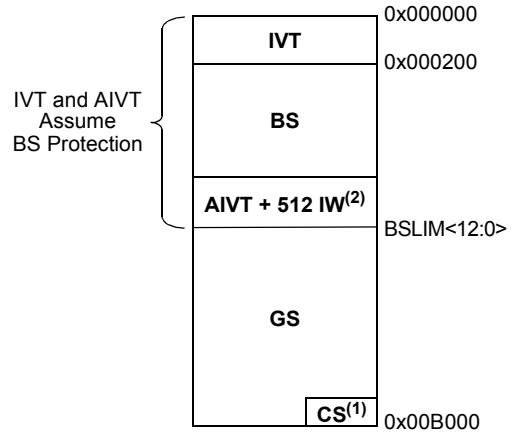

Note 1: If CS is write-protected, the last page (GS + CS) of program memory will be protected from an erase condition.

2: The last half (256 IW) of the last page of BS is unusable program memory.

21.13 Code Protection and CodeGuard™ Security – Slave PRAM

The dsPIC33CH128MP508S1 family Slave PRAM inherits its security configuration from the Master GSS<1:0> and GWRP Configuration bit settings. The Slave PRAM does not have a BS or CS segment.

All user code space is considered GS, including the IVT. Therefore, there are no specific segment read and write permissions to consider.

If either the GSSx or GWRP bits are enabled, ICSP entry directly to the Slave PRAM is inhibited. This prevents Slave only programming and debugging when the Master Flash GS is code-protected.

RTSP self-programming of the PRAM is still allowed when Flash GS code protection is enabled. However, the Slave PRAM image containing the application code for the RTSP operations must be loaded from the Master Flash at run time and is subject to Master Flash code protection configuration.

Master to Slave image loading is always allowed, regardless of any code protection settings.

Privileged Dual Partition mode performs the same function as Protected Dual Partition mode, except additional constraints are applied in an effort to prevent code in the Boot Segment and General Segment from being used against each other.

© 2017-2018 Microchip Technology Inc.

22.0 INSTRUCTION SET SUMMARY

Note: This data sheet summarizes the features of the dsPIC33CH128MP508 family of devices. It is not intended to be a comprehensive reference source. To complement the information in this data sheet, refer to the related section in the *"dsPIC33/PIC24 Family Reference Manual"*, which is available from the Microchip web site (www.microchip.com).

The dsPIC33CH instruction set is almost identical to that of the dsPIC30F and dsPIC33F.

Most instructions are a single program memory word (24 bits). Only three instructions require two program memory locations.

Each single-word instruction is a 24-bit word, divided into an 8-bit opcode, which specifies the instruction type and one or more operands, which further specify the operation of the instruction.

The instruction set is highly orthogonal and is grouped into five basic categories:

- Word or byte-oriented operations
- Bit-oriented operations
- Literal operations
- DSP operations
- Control operations

Table 22-1 lists the general symbols used in describing the instructions.

The dsPIC33 instruction set summary in Table 22-2 lists all the instructions, along with the status flags affected by each instruction.

Most word or byte-oriented W register instructions (including barrel shift instructions) have three operands:

- The first source operand, which is typically a register 'Wb' without any address modifier
- The second source operand, which is typically a register 'Ws' with or without an address modifier
- The destination of the result, which is typically a register 'Wd' with or without an address modifier

However, word or byte-oriented file register instructions have two operands:

- The file register specified by the value 'f'
- The destination, which could be either the file register 'f' or the W0 register, which is denoted as 'WREG'

Most bit-oriented instructions (including simple rotate/shift instructions) have two operands:

- The W register (with or without an address modifier) or file register (specified by the value of 'Ws' or 'f')
- The bit in the W register or file register (specified by a literal value or indirectly by the contents of register 'Wb')

The literal instructions that involve data movement can use some of the following operands:

- A literal value to be loaded into a W register or file register (specified by 'k')
- The W register or file register where the literal value is to be loaded (specified by 'Wb' or 'f')

However, literal instructions that involve arithmetic or logical operations use some of the following operands:

- The first source operand, which is a register 'Wb' without any address modifier
- The second source operand, which is a literal value
- The destination of the result (only if not the same as the first source operand), which is typically a register 'Wd' with or without an address modifier

The `MAC` class of DSP instructions can use some of the following operands:

- The accumulator (A or B) to be used (required operand)
- The W registers to be used as the two operands
- The X and Y address space prefetch operations
- The X and Y address space prefetch destinations
- The accumulator write-back destination

The other DSP instructions do not involve any multiplication and can include:

- The accumulator to be used (required)
- The source or destination operand (designated as Wso or Wdo, respectively) with or without an address modifier
- The amount of shift specified by a W register 'Wn' or a literal value

The control instructions can use some of the following operands:

- A program memory address
- The mode of the Table Read and Table Write instructions

Most instructions are a single word. Certain double-word instructions are designed to provide all the required information in these 48 bits. In the second word, the 8 MSbs are '0's. If this second word is executed as an instruction (by itself), it executes as a NOP.

The double-word instructions execute in two instruction cycles.

Most single-word instructions are executed in a single instruction cycle, unless a conditional test is true or the Program Counter is changed as a result of the instruction, or a PSV or Table Read is performed. In these cases, the execution takes multiple instruction cycles, with the additional instruction cycle(s) executed as a NOP. Certain instructions that involve skipping over the subsequent instruction require either two or three cycles if the skip is performed, depending on whether the instruction being skipped is a single-word or two-word instruction. Moreover, double-word moves require two cycles.

Note: For more details on the instruction set, refer to the *"16-Bit MCU and DSC Programmer's Reference Manual"* (DS70000157).

TABLE 22-1: SYMBOLS USED IN OPCODE DESCRIPTIONS

Field	Description
#text	Means literal defined by "text"
(text)	Means "content of text"
[text]	Means "the location addressed by text"
{ }	Optional field or operation
a ∈ {b, c, d}	a is selected from the set of values b, c, d
<n:m>	Register bit field
.b	Byte mode selection
.d	Double-Word mode selection
.S	Shadow register select
.w	Word mode selection (default)
Acc	One of two accumulators {A, B}
AWB	Accumulator Write-Back Destination Address register ∈ {W13, [W13]+ = 2}
bit4	4-bit bit selection field (used in word-addressed instructions) ∈ {0...15}
C, DC, N, OV, Z	MCU Status bits: Carry, Digit Carry, Negative, Overflow, Sticky Zero
Expr	Absolute address, label or expression (resolved by the linker)
f	File register address ∈ {0x0000...0x1FFF}
lit1	1-bit unsigned literal ∈ {0,1}
lit4	4-bit unsigned literal ∈ {0...15}
lit5	5-bit unsigned literal ∈ {0...31}
lit8	8-bit unsigned literal ∈ {0...255}
lit10	10-bit unsigned literal ∈ {0...255} for Byte mode, {0:1023} for Word mode
lit14	14-bit unsigned literal ∈ {0...16384}
lit16	16-bit unsigned literal ∈ {0...65535}
lit23	23-bit unsigned literal ∈ {0...8388608}; LSb must be '0'
None	Field does not require an entry, can be blank
OA, OB, SA, SB	DSP Status bits: ACCA Overflow, ACCB Overflow, ACCA Saturate, ACCB Saturate
PC	Program Counter
Slit10	10-bit signed literal ∈ {-512...511}
Slit16	16-bit signed literal ∈ {-32768...32767}
Slit6	6-bit signed literal ∈ {-16...16}
Wb	Base W register ∈ {W0...W15}
Wd	Destination W register ∈ { Wd, [Wd], [Wd++], [Wd--], [++Wd], [--Wd] }
Wdo	Destination W register ∈ { Wnd, [Wnd], [Wnd++], [Wnd--], [++Wnd], [--Wnd], [Wnd+Wb] }
Wm,Wn	Dividend, Divisor Working register pair (direct addressing)

© 2017-2018 Microchip Technology Inc.

TABLE 22-1: SYMBOLS USED IN OPCODE DESCRIPTIONS (CONTINUED)

Field	Description
Wm*Wm	Multiplicand and Multiplier Working register pair for Square instructions ∈ {W4 * W4,W5 * W5,W6 * W6,W7 * W7}
Wm*Wn	Multiplicand and Multiplier Working register pair for DSP instructions ∈ {W4 * W5,W4 * W6,W4 * W7,W5 * W6,W5 * W7,W6 * W7}
Wn	One of 16 Working registers ∈ {W0...W15}
Wnd	One of 16 Destination Working registers ∈ {W0...W15}
Wns	One of 16 Source Working registers ∈ {W0...W15}
WREG	W0 (Working register used in file register instructions)
Ws	Source W register ∈ { Ws, [Ws], [Ws++], [Ws--], [++Ws], [--Ws] }
Wso	Source W register ∈ { Wns, [Wns], [Wns++], [Wns--], [++Wns], [--Wns], [Wns+Wb] }
Wx	X Data Space Prefetch Address register for DSP instructions ∈ {[W8] + = 6, [W8] + = 4, [W8] + = 2, [W8], [W8] – = 6, [W8] – = 4, [W8] – = 2, [W9] + = 6, [W9] + = 4, [W9] + = 2, [W9], [W9] – = 6, [W9] – = 4, [W9] – = 2, [W9 + W12], none}
Wxd	X Data Space Prefetch Destination register for DSP instructions ∈ {W4...W7}
Wy	Y Data Space Prefetch Address register for DSP instructions ∈ {[W10] + = 6, [W10] + = 4, [W10] + = 2, [W10], [W10] – = 6, [W10] – = 4, [W10] – = 2, [W11] + = 6, [W11] + = 4, [W11] + = 2, [W11], [W11] – = 6, [W11] – = 4, [W11] – = 2, [W11 + W12], none}
Wyd	Y Data Space Prefetch Destination register for DSP instructions ∈ {W4...W7}

Note: In dsPIC33CH128MP508 devices, read and Read-Modify-Write (RMW) operations on non-CPU Special Function Registers require an additional cycle when compared to dsPIC30F, dsPIC33F, PIC24F and PIC24H devices

TABLE 22-2: INSTRUCTION SET OVERVIEW

Base Instr #	Assembly Mnemonic	Assembly Syntax	Description	# of Words	# of Cycles(1)	Status Flags Affected
1	ADD	ADD Acc	Add Accumulators	1	1	OA,OB,SA,SB
		ADD f	f = f + WREG	1	1	C,DC,N,OV,Z
		ADD f,WREG	WREG = f + WREG	1	1	C,DC,N,OV,Z
		ADD #lit10,Wn	Wd = lit10 + Wd	1	1	C,DC,N,OV,Z
		ADD Wb,Ws,Wd	Wd = Wb + Ws	1	1	C,DC,N,OV,Z
		ADD Wb,#lit5,Wd	Wd = Wb + lit5	1	1	C,DC,N,OV,Z
		ADD Wso,#Slit4,Acc	16-bit Signed Add to Accumulator	1	1	OA,OB,SA,SB
2	ADDC	ADDC f	f = f + WREG + (C)	1	1	C,DC,N,OV,Z
		ADDC f,WREG	WREG = f + WREG + (C)	1	1	C,DC,N,OV,Z
		ADDC #lit10,Wn	Wd = lit10 + Wd + (C)	1	1	C,DC,N,OV,Z
		ADDC Wb,Ws,Wd	Wd = Wb + Ws + (C)	1	1	C,DC,N,OV,Z
		ADDC Wb,#lit5,Wd	Wd = Wb + lit5 + (C)	1	1	C,DC,N,OV,Z
3	AND	AND f	f = f .AND. WREG	1	1	N,Z
		AND f,WREG	WREG = f .AND. WREG	1	1	N,Z
		AND #lit10,Wn	Wd = lit10 .AND. Wd	1	1	N,Z
		AND Wb,Ws,Wd	Wd = Wb .AND. Ws	1	1	N,Z
		AND Wb,#lit5,Wd	Wd = Wb .AND. lit5	1	1	N,Z
4	ASR	ASR f	f = Arithmetic Right Shift f	1	1	C,N,OV,Z
		ASR f,WREG	WREG = Arithmetic Right Shift f	1	1	C,N,OV,Z
		ASR Ws,Wd	Wd = Arithmetic Right Shift Ws	1	1	C,N,OV,Z
		ASR Wb,Wns,Wnd	Wnd = Arithmetic Right Shift Wb by Wns	1	1	N,Z
		ASR Wb,#lit5,Wnd	Wnd = Arithmetic Right Shift Wb by lit5	1	1	N,Z
5	BCLR	BCLR f,#bit4	Bit Clear f	1	1	None
		BCLR Ws,#bit4	Bit Clear Ws	1	1	None
6	BFEXT	BFEXT bit4,wid5,Ws,Wb	Bit Field Extract from Ws to Wb	2	2	None
		BFEXT bit4,wid5,f,Wb	Bit Field Extract from f to Wb	2	2	None
7	BFINS	BFINS bit4,wid5,Wb,Ws	Bit Field Insert from Wb into Ws	2	2	None
		BFINS bit4,wid5,Wb,f	Bit Field Insert from Wb into f	2	2	None
		BFINS bit4,wid5,lit8,Ws	Bit Field Insert from #lit8 to Ws	2	2	None
8	BOOTSWP	BOOTSWP	Swap the Active and Inactive Program Flash Space	1	2	None

Note 1: Read and Read-Modify-Write (e.g., bit operations and logical operations) on non-CPU SFRs incur an additional instruction cycle.
2: Cycle times for Slave core are different for Master core, as shown in 2.
3: For dsPIC33CH128MP508 devices, the divide instructions must be preceded with a “REPEAT #5” instruction, such that they are executed six consecutive times

© 2017-2018 Microchip Technology Inc.

TABLE 22-2: INSTRUCTION SET OVERVIEW (CONTINUED)

Base Instr #	Assembly Mnemonic	Assembly Syntax		Description	# of Words	# of Cycles(1)	Status Flags Affected
9	BRA	BRA	C,Expr	Branch if Carry	1	1 (4)/1 (2)(2)	None
		BRA	GE,Expr	Branch if Greater Than or Equal	1	1 (4)/1 (2)(2)	None
		BRA	GEU,Expr	Branch if unsigned Greater Than or Equal	1	1 (4)/1 (2)(2)	None
		BRA	GT,Expr	Branch if Greater Than	1	1 (4)/1 (2)(2)	None
		BRA	GTU,Expr	Branch if Unsigned Greater Than	1	1 (4)/1 (2)(2)	None
		BRA	LE,Expr	Branch if Less Than or Equal	1	1 (4)/1 (2)(2)	None
		BRA	LEU,Expr	Branch if Unsigned Less Than or Equal	1	1 (4)/1 (2)(2)	None
		BRA	LT,Expr	Branch if Less Than	1	1 (4)/1 (2)(2)	None
		BRA	LTU,Expr	Branch if Unsigned Less Than	1	1 (4)/1 (2)(2)	None
		BRA	N,Expr	Branch if Negative	1	1 (4)/1 (2)(2)	None
		BRA	NC,Expr	Branch if Not Carry	1	1 (4)/1 (2)(2)	None
		BRA	NN,Expr	Branch if Not Negative	1	1 (4)/1 (2)(2)	None
		BRA	NOV,Expr	Branch if Not Overflow	1	1 (4)/1 (2)(2)	None
		BRA	NZ,Expr	Branch if Not Zero	1	1 (4)/1 (2)(2)	None
		BRA	OA,Expr	Branch if Accumulator A Overflow	1	1 (4)/1 (2)(2)	None
		BRA	OB,Expr	Branch if Accumulator B Overflow	1	1 (4)/1 (2)(2)	None
		BRA	OV,Expr	Branch if Overflow	1	1 (4)/1 (2)(2)	None
		BRA	SA,Expr	Branch if Accumulator A Saturated	1	1 (4)/1 (2)(2)	None
		BRA	SB,Expr	Branch if Accumulator B Saturated	1	1 (4)/1 (2)(2)	None
		BRA	Expr	Branch Unconditionally	1	4/2(2)	None
		BRA	Z,Expr	Branch if Zero	1	1 (4)/1 (2)(2)	None
		BRA	Wn	Computed Branch	1	4	None
10	BREAK	BREAK		Stop User Code Execution	1	1	None
11	BSET	BSET	f,#bit4	Bit Set f	1	1	None
			Ws,#bit4	Bit Set Ws	1	1	None
12	BSW	BSW.C	Ws,Wb	Write C bit to Ws<Wb>	1	1	None
		BSW.Z	Ws,Wb	Write Z bit to Ws<Wb>	1	1	None
13	BTG	BTG	f,#bit4	Bit Toggle f	1	1	None
		BTG	Ws,#bit4	Bit Toggle Ws	1	1	None
14	BTSC	BTSC	f,#bit4	Bit Test f, Skip if Clear	1	1 (2 or 3)	None
		BTSC	Ws,#bit4	Bit Test Ws, Skip if Clear	1	1 (2 or 3)	None
15	BTSS	BTSS	f,#bit4	Bit Test f, Skip if Set	1	1 (2 or 3)	None
		BTSS	Ws,#bit4	Bit Test Ws, Skip if Set	1	1 (2 or 3)	None
16	BTST	BTST	f,#bit4	Bit Test f	1	1	Z
		BTST.C	Ws,#bit4	Bit Test Ws to C	1	1	C
		BTST.Z	Ws,#bit4	Bit Test Ws to Z	1	1	Z
		BTST.C	Ws,Wb	Bit Test Ws<Wb> to C	1	1	C
		BTST.Z	Ws,Wb	Bit Test Ws<Wb> to Z	1	1	Z
17	BTSTS	BTSTS	f,#bit4	Bit Test then Set f	1	1	Z
		BTSTS.C	Ws,#bit4	Bit Test Ws to C, then Set	1	1	C
		BTSTS.Z	Ws,#bit4	Bit Test Ws to Z, then Set	1	1	Z
18	CALL	CALL	lit23	Call Subroutine	2	4/(2)(2)	SFA
		CALL	Wn	Call Indirect Subroutine	1	4(2)(2)	SFA
		CALL.L	Wn	Call Indirect Subroutine (long address)	1	4(2)(2)	SFA

Note 1: Read and Read-Modify-Write (e.g., bit operations and logical operations) on non-CPU SFRs incur an additional instruction cycle.
2: Cycle times for Slave core are different for Master core, as shown in 2.
3: For dsPIC33CH128MP508 devices, the divide instructions must be preceded with a “REPEAT #5” instruction, such that they are executed six consecutive times

TABLE 22-2: INSTRUCTION SET OVERVIEW (CONTINUED)

Base Instr #	Assembly Mnemonic	Assembly Syntax		Description	# of Words	# of Cycles(1)	Status Flags Affected
19	CLR	CLR	f	f = 0x0000	1	1	None
		CLR	WREG	WREG = 0x0000	1	1	None
		CLR	Ws	Ws = 0x0000	1	1	None
		CLR	Acc,Wx,Wxd,Wy,Wyd,AWB	Clear Accumulator	1	1	OA,OB,SA,SB
20	CLRWDT	CLRWDT		Clear Watchdog Timer	1	1	WDTO,Sleep
21	COM	COM	f	$f = \overline{f}$	1	1	N,Z
		COM	f,WREG	$WREG = \overline{f}$	1	1	N,Z
		COM	Ws,Wd	$Wd = \overline{Ws}$	1	1	N,Z
22	CP	CP	f	Compare f with WREG	1	1	C,DC,N,OV,Z
		CP	Wb,#lit8	Compare Wb with lit8	1	1	C,DC,N,OV,Z
		CP	Wb,Ws	Compare Wb with Ws (Wb – Ws)	1	1	C,DC,N,OV,Z
23	CP0	CP0	f	Compare f with 0x0000	1	1	C,DC,N,OV,Z
		CP0	Ws	Compare Ws with 0x0000	1	1	C,DC,N,OV,Z
24	CPB	CPB	f	Compare f with WREG, with Borrow	1	1	C,DC,N,OV,Z
		CPB	Wb,#lit8	Compare Wb with lit8, with Borrow	1	1	C,DC,N,OV,Z
		CPB	Wb,Ws	Compare Wb with Ws, with Borrow (Wb – Ws – $\overline{C}$)	1	1	C,DC,N,OV,Z
25	CPSEQ	CPSEQ	Wb,Wn	Compare Wb with Wn, Skip if =	1	1 (2 or 3)	None
	CPBEQ	CPBEQ	Wb,Wn,Expr	Compare Wb with Wn, Branch if =	1	1 (5)	None
26	CPSGT	CPSGT	Wb,Wn	Compare Wb with Wn, Skip if >	1	1 (2 or 3)	None
	CPBGT	CPBGT	Wb,Wn,Expr	Compare Wb with Wn, Branch if >	1	1 (5)	None
27	CPSLT	CPSLT	Wb,Wn	Compare Wb with Wn, Skip if <	1	1 (2 or 3)	None
		CPBLT	Wb,Wn,Expr	Compare Wb with Wn, Branch if <	1	1 (5)	None
28	CPSNE	CPSNE	Wb,Wn	Compare Wb with Wn, Skip if ≠	1	1 (2 or 3)	None
		CPBNE	Wb,Wn,Expr	Compare Wb with Wn, Branch if ≠	1	1 (5)	None
29	CTXTSWP	CTXTSWP	#1it3	Switch CPU Register Context to Context Defined by lit3	1	2	None
30	CTXTSWP	CTXTSWP	Wn	Switch CPU Register Context to Context Defined by Wn	1	2	None
31	DAW.B	DAW.B	Wn	Wn = Decimal Adjust Wn	1	1	C
32	DEC	DEC	f	f = f – 1	1	1	C,DC,N,OV,Z
		DEC	f,WREG	WREG = f – 1	1	1	C,DC,N,OV,Z
		DEC	Ws,Wd	Wd = Ws – 1	1	1	C,DC,N,OV,Z
33	DEC2	DEC2	f	f = f – 2	1	1	C,DC,N,OV,Z
		DEC2	f,WREG	WREG = f – 2	1	1	C,DC,N,OV,Z
		DEC2	Ws,Wd	Wd = Ws – 2	1	1	C,DC,N,OV,Z
34	DISI	DISI	#lit14	Disable Interrupts for k Instruction Cycles	1	1	None
35	DIVF	DIVF	Wm,Wn	Signed 16/16-bit Fractional Divide	1	18/6	N,Z,C,OV
36	DIV.S	DIV.S	Wm,Wn	Signed 16/16-bit Integer Divide	1	18/6	N,Z,C,OV
		DIV.SD	Wm,Wn	Signed 32/16-bit Integer Divide	1	18/6	N,Z,C,OV
37	DIV.U	DIV.U	Wm,Wn	Unsigned 16/16-bit Integer Divide	1	18/6	N,Z,C,OV
		DIV.UD	Wm,Wn	Unsigned 32/16-bit Integer Divide	1	18/6	N,Z,C,OV
38	DIVF2	DIVF2	Wm,Wn	Signed 16/16-bit Fractional Divide (W1:W0 preserved)	1	6	N,Z,C,OV
39	DIV2.S	DIV2.S	Wm,Wn	Signed 16/16-bit Integer Divide (W1:W0 preserved)	1	6	N,Z,C,OV
		DIV2.SD	Wm,Wn	Signed 32/16-bit Integer Divide (W1:W0 preserved)	1	6	N,Z,C,OV

Note 1: Read and Read-Modify-Write (e.g., bit operations and logical operations) on non-CPU SFRs incur an additional instruction cycle.
2: Cycle times for Slave core are different for Master core, as shown in 2.
3: For dsPIC33CH128MP508 devices, the divide instructions must be preceded with a "REPEAT #5" instruction, such that they are executed six consecutive times

© 2017-2018 Microchip Technology Inc.

TABLE 22-2: INSTRUCTION SET OVERVIEW (CONTINUED)

Base Instr #	Assembly Mnemonic	Assembly Syntax		Description	# of Words	# of Cycles(1)	Status Flags Affected
40	DIV2.U	DIV2.U	Wm,Wn	Unsigned 16/16-bit Integer Divide (W1:W0 preserved)	1	6	N,Z,C,OV
		DIV2.UD	Wm,Wn	Unsigned 32/16-bit Integer Divide (W1:W0 preserved)	1	6	N,Z,C,OV
41	DO	DO	#lit15,Expr	Do Code to PC + Expr, lit15 + 1 Times	2	2	None
		DO	Wn,Expr	Do code to PC + Expr, (Wn) + 1 Times	2	2	None
42	ED	ED	Wm*Wm,Acc,Wx,Wy,Wxd	Euclidean Distance (no accumulate)	1	1	OA,OB,OAB, SA,SB,SAB
43	EDAC	EDAC	Wm*Wm,Acc,Wx,Wy,Wxd	Euclidean Distance	1	1	OA,OB,OAB, SA,SB,SAB
44	EXCH	EXCH	Wns,Wnd	Swap Wns with Wnd	1	1	None
46	FBCL	FBCL	Ws,Wnd	Find Bit Change from Left (MSb) Side	1	1	C
47	FF1L	FF1L	Ws,Wnd	Find First One from Left (MSb) Side	1	1	C
48	FF1R	FF1R	Ws,Wnd	Find First One from Right (LSb) Side	1	1	C
49	FLIM	FLIM	Wb, Ws	Force Data (Upper and Lower) Range Limit without Limit Excess Result	1	1	N,Z,OV
		FLIM.V	Wb, Ws, Wd	Force Data (Upper and Lower) Range Limit with Limit Excess Result	1	1	N,Z,OV
50	GOTO	GOTO	Expr	Go to Address	2	4/2(2)	None
		GOTO	Wn	Go to Indirect	1	4/2(2)	None
		GOTO.L	Wn	Go to Indirect (long address)	1	4/2(2)	None
51	INC	INC	f	f = f + 1	1	1	C,DC,N,OV,Z
		INC	f,WREG	WREG = f + 1	1	1	C,DC,N,OV,Z
		INC	Ws,Wd	Wd = Ws + 1	1	1	C,DC,N,OV,Z
52	INC2	INC2	f	f = f + 2	1	1	C,DC,N,OV,Z
		INC2	f,WREG	WREG = f + 2	1	1	C,DC,N,OV,Z
		INC2	Ws,Wd	Wd = Ws + 2	1	1	C,DC,N,OV,Z
53	IOR	IOR	f	f = f .IOR. WREG	1	1	N,Z
		IOR	f,WREG	WREG = f .IOR. WREG	1	1	N,Z
		IOR	#lit10,Wn	Wd = lit10 .IOR. Wd	1	1	N,Z
		IOR	Wb,Ws,Wd	Wd = Wb .IOR. Ws	1	1	N,Z
		IOR	Wb,#lit5,Wd	Wd = Wb .IOR. lit5	1	1	N,Z
54	LAC	LAC	Wso,#Slit4,Acc	Load Accumulator	1	1	OA,OB,OAB, SA,SB,SAB
		LAC.D	Wso, #Slit4, Acc	Load Accumulator Double	1	2	OA,SA,OB,SB
55	LDSLV	LDSLV	Wso,Wdo,lit2	Move a Single Instruction Word from Master to Slave PRAM	1	1	None
56	LNK	LNK	#lit14	Link Frame Pointer	1	1	SFA
57	LSR	LSR	f	f = Logical Right Shift f	1	1	C,N,OV,Z
		LSR	f,WREG	WREG = Logical Right Shift f	1	1	C,N,OV,Z
		LSR	Ws,Wd	Wd = Logical Right Shift Ws	1	1	C,N,OV,Z
		LSR	Wb,Wns,Wnd	Wnd = Logical Right Shift Wb by Wns	1	1	N,Z
		LSR	Wb,#lit5,Wnd	Wnd = Logical Right Shift Wb by lit5	1	1	N,Z
58	MAC	MAC	Wm*Wn,Acc,Wx,Wxd,Wy,Wyd, AWB	Multiply and Accumulate	1	1	OA,OB,OAB, SA,SB,SAB
		MAC	Wm*Wm,Acc,Wx,Wxd,Wy,Wyd	Square and Accumulate	1	1	OA,OB,OAB, SA,SB,SAB
59	MAX	MAX	Acc	Force Data Maximum Range Limit	1	1	N,OV,Z
		MAX.V	Acc, Wnd	Force Data Maximum Range Limit with Result	1	1	N,OV,Z

Note 1: Read and Read-Modify-Write (e.g., bit operations and logical operations) on non-CPU SFRs incur an additional instruction cycle.
2: Cycle times for Slave core are different for Master core, as shown in 2.
3: For dsPIC33CH128MP508 devices, the divide instructions must be preceded with a “REPEAT #5” instruction, such that they are executed six consecutive times

TABLE 22-2: INSTRUCTION SET OVERVIEW (CONTINUED)

Base Instr #	Assembly Mnemonic	Assembly Syntax	Description	# of Words	# of Cycles(1)	Status Flags Affected
60	MIN	MIN Acc	If Accumulator A Less than B Load Accumulator with B or vice versa	1	1	N,OV,Z
		MIN.V Acc, Wd	If Accumulator A Less than B Accumulator Force Minimum Data Range Limit with Limit Excess Result	1	1	N,OV,Z
		MINZ Acc	Accumulator Force Minimum Data Range Limit	1	1	N,OV,Z
		MINZ.V Acc, Wd	Accumulator Force Minimum Data Range Limit with Limit Excess Result	1	1	N,OV,Z
61	MOV	MOV f,Wn	Move f to Wn	1	1	None
		MOV f	Move f to f	1	1	None
		MOV f,WREG	Move f to WREG	1	1	None
		MOV #lit16,Wn	Move 16-bit Literal to Wn	1	1	None
		MOV.b #lit8,Wn	Move 8-bit Literal to Wn	1	1	None
		MOV Wn,f	Move Wn to f	1	1	None
		MOV Wso,Wdo	Move Ws to Wd	1	1	None
		MOV WREG,f	Move WREG to f	1	1	None
		MOV.D Wns,Wd	Move Double from W(ns):W(ns + 1) to Wd	1	2	None
		MOV.D Ws,Wnd	Move Double from Ws to W(nd + 1):W(nd)	1	2	None
62	MOVPAG	MOVPAG #lit10,DSRPAG	Move 10-bit Literal to DSRPAG	1	1	None
		MOVPAG #lit8,TBLPAG	Move 8-bit Literal to TBLPAG	1	1	None
		MOVPAG Ws, DSRPAG	Move Ws<9:0> to DSRPAG	1	1	None
		MOVPAG Ws, TBLPAG	Move Ws<7:0> to TBLPAG	1	1	None
64	MOVSAC	MOVSAC Acc,Wx,Wxd,Wy,Wyd,AWB	Prefetch and Store Accumulator	1	1	None
65	MPY	MPY Wm*Wn,Acc,Wx,Wxd,Wy,Wyd	Multiply Wm by Wn to Accumulator	1	1	OA,OB,OAB, SA,SB,SAB
		MPY Wm*Wm,Acc,Wx,Wxd,Wy,Wyd	Square Wm to Accumulator	1	1	OA,OB,OAB, SA,SB,SAB
66	MPY.N	MPY.N Wm*Wn,Acc,Wx,Wxd,Wy,Wyd	-(Multiply Wm by Wn) to Accumulator	1	1	None
67	MSC	MSC Wm*Wm,Acc,Wx,Wxd,Wy,Wyd, AWB	Multiply and Subtract from Accumulator	1	1	OA,OB,OAB, SA,SB,SAB
68	MUL	MUL.SS Wb,Ws,Wnd	{Wnd + 1, Wnd} = Signed(Wb) * Signed(Ws)	1	1	None
		MUL.SS Wb,Ws,Acc	Accumulator = Signed(Wb) * Signed(Ws)	1	1	None
		MUL.SU Wb,Ws,Wnd	{Wnd + 1, Wnd} = Signed(Wb) * Unsigned(Ws)	1	1	None
		MUL.SU Wb,Ws,Acc	Accumulator = Signed(Wb) * Unsigned(Ws)	1	1	None
		MUL.SU Wb,#lit5,Acc	Accumulator = Signed(Wb) * Unsigned(lit5)	1	1	None
		MUL.US Wb,Ws,Wnd	{Wnd + 1, Wnd} = Unsigned(Wb) * Signed(Ws)	1	1	None
		MUL.US Wb,Ws,Acc	Accumulator = Unsigned(Wb) * Signed(Ws)	1	1	None
		MUL.UU Wb,Ws,Wnd	{Wnd + 1, Wnd} = Unsigned(Wb) * Unsigned(Ws)	1	1	None
		MUL.UU Wb,#lit5,Acc	Accumulator = Unsigned(Wb) * Unsigned(lit5)	1	1	None
		MUL.UU Wb,Ws,Acc	Accumulator = Unsigned(Wb) * Unsigned(Ws)	1	1	None
		MULW.SS Wb,Ws,Wnd	Wnd = Signed(Wb) * Signed(Ws)	1	1	None
		MULW.SU Wb,Ws,Wnd	Wnd = Signed(Wb) * Unsigned(Ws)	1	1	None
		MULW.US Wb,Ws,Wnd	Wnd = Unsigned(Wb) * Signed(Ws)	1	1	None
		MULW.UU Wb,Ws,Wnd	Wnd = Unsigned(Wb) * Unsigned(Ws)	1	1	None
		MUL.SU Wb,#lit5,Wnd	{Wnd + 1, Wnd} = Signed(Wb) * Unsigned(lit5)	1	1	None
		MUL.SU Wb,#lit5,Wnd	Wnd = Signed(Wb) * Unsigned(lit5)	1	1	None
		MUL.UU Wb,#lit5,Wnd	{Wnd + 1, Wnd} = Unsigned(Wb) * Unsigned(lit5)	1	1	None
		MUL.UU Wb,#lit5,Wnd	Wnd = Unsigned(Wb) * Unsigned(lit5)	1	1	None
		MUL f	W3:W2 = f * WREG	1	1	None

Note 1: Read and Read-Modify-Write (e.g., bit operations and logical operations) on non-CPU SFRs incur an additional instruction cycle.
2: Cycle times for Slave core are different for Master core, as shown in 2.
3: For dsPIC33CH128MP508 devices, the divide instructions must be preceded with a "REPEAT #5" instruction, such that they are executed six consecutive times

© 2017-2018 Microchip Technology Inc.

TABLE 22-2: INSTRUCTION SET OVERVIEW (CONTINUED)

Base Instr #	Assembly Mnemonic	Assembly Syntax	Description	# of Words	# of Cycles(1)	Status Flags Affected
69	NEG	NEG Acc	Negate Accumulator	1	1	OA,OB,OAB, SA,SB,SAB
		NEG f	f = $\overline{f}$ + 1	1	1	C,DC,N,OV,Z
		NEG f,WREG	WREG = $\overline{f}$ + 1	1	1	C,DC,N,OV,Z
		NEG Ws,Wd	Wd = $\overline{Ws}$ + 1	1	1	C,DC,N,OV,Z
70	NOP	NOP	No Operation	1	1	None
		NOPR	No Operation	1	1	None
71	NORM	NORM Acc, Wd	Normalize Accumulator	1	1	N,OV,Z
72	POP	POP f	Pop f from Top-of-Stack (TOS)	1	1	None
		POP Wdo	Pop from Top-of-Stack (TOS) to Wdo	1	1	None
		POP.D Wnd	Pop from Top-of-Stack (TOS) to W(nd):W(nd + 1)	1	2	None
		POP.S	Pop Shadow Registers	1	1	All
73	PUSH	PUSH f	Push f to Top-of-Stack (TOS)	1	1	None
		PUSH Wso	Push Wso to Top-of-Stack (TOS)	1	1	None
		PUSH.D Wns	Push W(ns):W(ns + 1) to Top-of-Stack (TOS)	1	2	None
		PUSH.S	Push Shadow Registers	1	1	None
74	PWRSAV	PWRSAV #lit1	Go into Sleep or Idle mode	1	1	WDTO,Sleep
75	RCALL	RCALL Expr	Relative Call	1	4/2(2)	SFA
		RCALL Wn	Computed Call	1	4/2(2)	SFA
76	REPEAT	REPEAT #lit15	Repeat Next Instruction lit15 + 1 times	1	1	None
		REPEAT Wn	Repeat Next Instruction (Wn) + 1 times	1	1	None
77	RESET	RESET	Software Device Reset	1	1	None
78	RETFIE	RETFIE	Return from Interrupt	1	6 (5)/3(2)	SFA
79	RETLW	RETLW #lit10,Wn	Return with Literal in Wn	1	6 (5)/3(2)	SFA
80	RETURN	RETURN	Return from Subroutine	1	6 (5)/3(2)	SFA
81	RLC	RLC f	f = Rotate Left through Carry f	1	1	C,N,Z
		RLC f,WREG	WREG = Rotate Left through Carry f	1	1	C,N,Z
		RLC Ws,Wd	Wd = Rotate Left through Carry Ws	1	1	C,N,Z
82	RLNC	RLNC f	f = Rotate Left (No Carry) f	1	1	N,Z
		RLNC f,WREG	WREG = Rotate Left (No Carry) f	1	1	N,Z
		RLNC Ws,Wd	Wd = Rotate Left (No Carry) Ws	1	1	N,Z
83	RRC	RRC f	f = Rotate Right through Carry f	1	1	C,N,Z
		RRC f,WREG	WREG = Rotate Right through Carry f	1	1	C,N,Z
		RRC Ws,Wd	Wd = Rotate Right through Carry Ws	1	1	C,N,Z
84	RRNC	RRNC f	f = Rotate Right (No Carry) f	1	1	N,Z
		RRNC f,WREG	WREG = Rotate Right (No Carry) f	1	1	N,Z
		RRNC Ws,Wd	Wd = Rotate Right (No Carry) Ws	1	1	N,Z
85	SAC	SAC Acc,#Slit4,Wdo	Store Accumulator	1	1	None
		SAC.R Acc,#Slit4,Wdo	Store Rounded Accumulator	1	1	None
		SAC.D #Slit4,Wdo	Store Accumulator Double	1	1	None
86	SE	SE Ws,Wnd	Wnd = Sign-Extended Ws	1	1	C,N,Z
87	SETM	SETM f	f = 0xFFFF	1	1	None
		SETM WREG	WREG = 0xFFFF	1	1	None
		SETM Ws	Ws = 0xFFFF	1	1	None
88	SFTAC	SFTAC Acc,Wn	Arithmetic Shift Accumulator by (Wn)	1	1	OA,OB,OAB, SA,SB,SAB
		SFTAC Acc,#Slit6	Arithmetic Shift Accumulator by Slit6	1	1	OA,OB,OAB, SA,SB,SAB

Note 1: Read and Read-Modify-Write (e.g., bit operations and logical operations) on non-CPU SFRs incur an additional instruction cycle.
2: Cycle times for Slave core are different for Master core, as shown in 2.
3: For dsPIC33CH128MP508 devices, the divide instructions must be preceded with a “REPEAT #5” instruction, such that they are executed six consecutive times

TABLE 22-2: INSTRUCTION SET OVERVIEW (CONTINUED)

Base Instr #	Assembly Mnemonic	Assembly Syntax		Description	# of Words	# of Cycles(1)	Status Flags Affected
89	SL	SL	f	f = Left Shift f	1	1	C,N,OV,Z
		SL	f,WREG	WREG = Left Shift f	1	1	C,N,OV,Z
		SL	Ws,Wd	Wd = Left Shift Ws	1	1	C,N,OV,Z
		SL	Wb,Wns,Wnd	Wnd = Left Shift Wb by Wns	1	1	N,Z
		SL	Wb,#lit5,Wnd	Wnd = Left Shift Wb by lit5	1	1	N,Z
91	SUB	SUB	Acc	Subtract Accumulators	1	1	OA,OB,OAB, SA,SB,SAB
		SUB	f	f = f – WREG	1	1	C,DC,N,OV,Z
		SUB	f,WREG	WREG = f – WREG	1	1	C,DC,N,OV,Z
		SUB	#lit10,Wn	Wn = Wn – lit10	1	1	C,DC,N,OV,Z
		SUB	Wb,Ws,Wd	Wd = Wb – Ws	1	1	C,DC,N,OV,Z
		SUB	Wb,#lit5,Wd	Wd = Wb – lit5	1	1	C,DC,N,OV,Z
92	SUBB	SUBB	f	f = f – WREG – ($\overline{C}$)	1	1	C,DC,N,OV,Z
		SUBB	f,WREG	WREG = f – WREG – ($\overline{C}$)	1	1	C,DC,N,OV,Z
		SUBB	#lit10,Wn	Wn = Wn – lit10 – ($\overline{C}$)	1	1	C,DC,N,OV,Z
		SUBB	Wb,Ws,Wd	Wd = Wb – Ws – ($\overline{C}$)	1	1	C,DC,N,OV,Z
		SUBB	Wb,#lit5,Wd	Wd = Wb – lit5 – ($\overline{C}$)	1	1	C,DC,N,OV,Z
93	SUBR	SUBR	f	f = WREG – f	1	1	C,DC,N,OV,Z
		SUBR	f,WREG	WREG = WREG – f	1	1	C,DC,N,OV,Z
		SUBR	Wb,Ws,Wd	Wd = Ws – Wb	1	1	C,DC,N,OV,Z
		SUBR	Wb,#lit5,Wd	Wd = lit5 – Wb	1	1	C,DC,N,OV,Z
94	SUBBR	SUBBR	f	f = WREG – f – ($\overline{C}$)	1	1	C,DC,N,OV,Z
		SUBBR	f,WREG	WREG = WREG – f – ($\overline{C}$)	1	1	C,DC,N,OV,Z
		SUBBR	Wb,Ws,Wd	Wd = Ws – Wb – ($\overline{C}$)	1	1	C,DC,N,OV,Z
		SUBBR	Wb,#lit5,Wd	Wd = lit5 – Wb – ($\overline{C}$)	1	1	C,DC,N,OV,Z
95	SWAP	SWAP.b	Wn	Wn = Nibble Swap Wn	1	1	None
		SWAP	Wn	Wn = Byte Swap Wn	1	1	None
96	TBLRDH	TBLRDH	Ws,Wd	Read Prog<23:16> to Wd<7:0>	1	5/3(2)	None
97	TBLRDL	TBLRDL	Ws,Wd	Read Prog<15:0> to Wd	1	5/3(2)	None
98	TBLWTH	TBLWTH	Ws,Wd	Write Ws<7:0> to Prog<23:16>	1	2	None
99	TBLWTL	TBLWTL	Ws,Wd	Write Ws to Prog<15:0>	1	2	None
101	ULNK	ULNK		Unlink Frame Pointer	1	1	SFA
103	VFSLV	VFSLV	Wns,Wnd,lit2	Compare (Master) Ws to (Slave) Wd	1	1	None
104	XOR	XOR	f	f = f .XOR. WREG	1	1	N,Z
		XOR	f,WREG	WREG = f .XOR. WREG	1	1	N,Z
		XOR	#lit10,Wn	Wd = lit10 .XOR. Wd	1	1	N,Z
		XOR	Wb,Ws,Wd	Wd = Wb .XOR. Ws	1	1	N,Z
		XOR	Wb,#lit5,Wd	Wd = Wb .XOR. lit5	1	1	N,Z
105	ZE	ZE	Ws,Wnd	Wnd = Zero-Extend Ws	1	1	C,Z,N

Note 1: Read and Read-Modify-Write (e.g., bit operations and logical operations) on non-CPU SFRs incur an additional instruction cycle.
2: Cycle times for Slave core are different for Master core, as shown in 2.
3: For dsPIC33CH128MP508 devices, the divide instructions must be preceded with a "REPEAT #5" instruction, such that they are executed six consecutive times

© 2017-2018 Microchip Technology Inc.

23.0 DEVELOPMENT SUPPORT

The PIC® microcontrollers (MCU) and dsPIC® digital signal controllers (DSC) are supported with a full range of software and hardware development tools:

- Integrated Development Environment
  - MPLAB® X IDE Software
- Compilers/Assemblers/Linkers
  - MPLAB XC Compiler
  - MPASM™ Assembler
  - MPLINK™ Object Linker/ MPLIB™ Object Librarian
  - MPLAB Assembler/Linker/Librarian for Various Device Families
- Simulators
  - MPLAB X SIM Software Simulator
- Emulators
  - MPLAB REAL ICE™ In-Circuit Emulator
- In-Circuit Debuggers/Programmers
  - MPLAB ICD 3
  - PICkit™ 3
- Device Programmers
  - MPLAB PM3 Device Programmer
- Low-Cost Demonstration/Development Boards, Evaluation Kits and Starter Kits
- Third-party development tools

23.1 MPLAB X Integrated Development Environment Software

The MPLAB X IDE is a single, unified graphical user interface for Microchip and third-party software, and hardware development tool that runs on Windows®, Linux and Mac OS® X. Based on the NetBeans IDE, MPLAB X IDE is an entirely new IDE with a host of free software components and plug-ins for high-performance application development and debugging. Moving between tools and upgrading from software simulators to hardware debugging and programming tools is simple with the seamless user interface.

With complete project management, visual call graphs, a configurable watch window and a feature-rich editor that includes code completion and context menus, MPLAB X IDE is flexible and friendly enough for new users. With the ability to support multiple tools on multiple projects with simultaneous debugging, MPLAB X IDE is also suitable for the needs of experienced users.

Feature-Rich Editor:

- Color syntax highlighting
- Smart code completion makes suggestions and provides hints as you type
- Automatic code formatting based on user-defined rules
- Live parsing

User-Friendly, Customizable Interface:

- Fully customizable interface: toolbars, toolbar buttons, windows, window placement, etc.
- Call graph window

Project-Based Workspaces:

- Multiple projects
- Multiple tools
- Multiple configurations
- Simultaneous debugging sessions

File History and Bug Tracking:

- Local file history feature
- Built-in support for Bugzilla issue tracker

23.2 MPLAB XC Compilers

The MPLAB XC Compilers are complete ANSI C compilers for all of Microchip's 8, 16 and 32-bit MCU and DSC devices. These compilers provide powerful integration capabilities, superior code optimization and ease of use. MPLAB XC Compilers run on Windows, Linux or MAC OS X.

For easy source level debugging, the compilers provide debug information that is optimized to the MPLAB X IDE.

The free MPLAB XC Compiler editions support all devices and commands, with no time or memory restrictions, and offer sufficient code optimization for most applications.

MPLAB XC Compilers include an assembler, linker and utilities. The assembler generates relocatable object files that can then be archived or linked with other relocatable object files and archives to create an executable file. MPLAB XC Compiler uses the assembler to produce its object file. Notable features of the assembler include:

- Support for the entire device instruction set
- Support for fixed-point and floating-point data
- Command-line interface
- Rich directive set
- Flexible macro language
- MPLAB X IDE compatibility

23.3 MPASM Assembler

The MPASM Assembler is a full-featured, universal macro assembler for PIC10/12/16/18 MCUs.

The MPASM Assembler generates relocatable object files for the MPLINK Object Linker, Intel® standard HEX files, MAP files to detail memory usage and symbol reference, absolute LST files that contain source lines and generated machine code, and COFF files for debugging.

The MPASM Assembler features include:

- Integration into MPLAB X IDE projects
- User-defined macros to streamline assembly code
- Conditional assembly for multipurpose source files
- Directives that allow complete control over the assembly process

23.4 MPLINK Object Linker/ MPLIB Object Librarian

The MPLINK Object Linker combines relocatable objects created by the MPASM Assembler. It can link relocatable objects from precompiled libraries, using directives from a linker script.

The MPLIB Object Librarian manages the creation and modification of library files of precompiled code. When a routine from a library is called from a source file, only the modules that contain that routine will be linked in with the application. This allows large libraries to be used efficiently in many different applications.

The object linker/library features include:

- Efficient linking of single libraries instead of many smaller files
- Enhanced code maintainability by grouping related modules together
- Flexible creation of libraries with easy module listing, replacement, deletion and extraction

23.5 MPLAB Assembler, Linker and Librarian for Various Device Families

MPLAB Assembler produces relocatable machine code from symbolic assembly language for PIC24, PIC32 and dsPIC DSC devices. MPLAB XC Compiler uses the assembler to produce its object file. The assembler generates relocatable object files that can then be archived or linked with other relocatable object files and archives to create an executable file. Notable features of the assembler include:

- Support for the entire device instruction set
- Support for fixed-point and floating-point data
- Command-line interface
- Rich directive set
- Flexible macro language
- MPLAB X IDE compatibility

© 2017-2018 Microchip Technology Inc.

23.6 MPLAB X SIM Software Simulator

The MPLAB X SIM Software Simulator allows code development in a PC-hosted environment by simulating the PIC MCUs and dsPIC DSCs on an instruction level. On any given instruction, the data areas can be examined or modified and stimuli can be applied from a comprehensive stimulus controller. Registers can be logged to files for further run-time analysis. The trace buffer and logic analyzer display extend the power of the simulator to record and track program execution, actions on I/O, most peripherals and internal registers.

The MPLAB X SIM Software Simulator fully supports symbolic debugging using the MPLAB XC Compilers, and the MPASM and MPLAB Assemblers. The software simulator offers the flexibility to develop and debug code outside of the hardware laboratory environment, making it an excellent, economical software development tool.

23.7 MPLAB REAL ICE In-Circuit Emulator System

The MPLAB REAL ICE In-Circuit Emulator System is Microchip's next generation high-speed emulator for Microchip Flash DSC and MCU devices. It debugs and programs all 8, 16 and 32-bit MCU, and DSC devices with the easy-to-use, powerful graphical user interface of the MPLAB X IDE.

The emulator is connected to the design engineer's PC using a high-speed USB 2.0 interface and is connected to the target with either a connector compatible with in-circuit debugger systems (RJ-11) or with the new high-speed, noise tolerant, Low-Voltage Differential Signal (LVDS) interconnection (CAT5).

The emulator is field upgradable through future firmware downloads in MPLAB X IDE. MPLAB REAL ICE offers significant advantages over competitive emulators including full-speed emulation, run-time variable watches, trace analysis, complex breakpoints, logic probes, a ruggedized probe interface and long (up to three meters) interconnection cables.

23.8 MPLAB ICD 3 In-Circuit Debugger System

The MPLAB ICD 3 In-Circuit Debugger System is Microchip's most cost-effective, high-speed hardware debugger/programmer for Microchip Flash DSC and MCU devices. It debugs and programs PIC Flash microcontrollers and dsPIC DSCs with the powerful, yet easy-to-use graphical user interface of the MPLAB IDE.

The MPLAB ICD 3 In-Circuit Debugger probe is connected to the design engineer's PC using a high-speed USB 2.0 interface and is connected to the target with a connector compatible with the MPLAB ICD 2 or MPLAB REAL ICE systems (RJ-11). MPLAB ICD 3 supports all MPLAB ICD 2 headers.

23.9 PICkit 3 In-Circuit Debugger/ Programmer

The MPLAB PICkit 3 allows debugging and programming of PIC and dsPIC Flash microcontrollers at a most affordable price point using the powerful graphical user interface of the MPLAB IDE. The MPLAB PICkit 3 is connected to the design engineer's PC using a full-speed USB interface and can be connected to the target via a Microchip debug (RJ-11) connector (compatible with MPLAB ICD 3 and MPLAB REAL ICE). The connector uses two device I/O pins and the Reset line to implement in-circuit debugging and In-Circuit Serial Programming™ (ICSP™).

23.10 MPLAB PM3 Device Programmer

The MPLAB PM3 Device Programmer is a universal, CE compliant device programmer with programmable voltage verification at V_{DDMIN} and V_{DDMAX} for maximum reliability. It features a large LCD display (128 x 64) for menus and error messages, and a modular, detachable socket assembly to support various package types. The ICSP cable assembly is included as a standard item. In Stand-Alone mode, the MPLAB PM3 Device Programmer can read, verify and program PIC devices without a PC connection. It can also set code protection in this mode. The MPLAB PM3 connects to the host PC via an RS-232 or USB cable. The MPLAB PM3 has high-speed communications and optimized algorithms for quick programming of large memory devices, and incorporates an MMC card for file storage and data applications.

23.11 Demonstration/Development Boards, Evaluation Kits and Starter Kits

A wide variety of demonstration, development and evaluation boards for various PIC MCUs and dsPIC DSCs allows quick application development on fully functional systems. Most boards include prototyping areas for adding custom circuitry and provide application firmware and source code for examination and modification.

The boards support a variety of features, including LEDs, temperature sensors, switches, speakers, RS-232 interfaces, LCD displays, potentiometers and additional EEPROM memory.

The demonstration and development boards can be used in teaching environments, for prototyping custom circuits and for learning about various microcontroller applications.

In addition to the PICDEM™ and dsPICDEM™ demonstration/development board series of circuits, Microchip has a line of evaluation kits and demonstration software for analog filter design, KEELOQ® security ICs, CAN, IrDA®, PowerSmart battery management, SEEVAL® evaluation system, Sigma-Delta ADC, flow rate sensing, plus many more.

Also available are starter kits that contain everything needed to experience the specified device. This usually includes a single application and debug capability, all on one board.

Check the Microchip web page (www.microchip.com) for the complete list of demonstration, development and evaluation kits.

23.12 Third-Party Development Tools

Microchip also offers a great collection of tools from third-party vendors. These tools are carefully selected to offer good value and unique functionality.

- Device Programmers and Gang Programmers from companies, such as SoftLog and CCS
- Software Tools from companies, such as Gimpel and Trace Systems
- Protocol Analyzers from companies, such as Saleae and Total Phase
- Demonstration Boards from companies, such as MikroElektronika, Digilent® and Olimex
- Embedded Ethernet Solutions from companies, such as EZ Web Lynx, WIZnet and IPLogika®

© 2017-2018 Microchip Technology Inc.

24.0 ELECTRICAL CHARACTERISTICS

This section provides an overview of the dsPIC33CH128MP508 family electrical characteristics. Additional information will be provided in future revisions of this document as it becomes available.

Absolute maximum ratings for the dsPIC33CH128MP508 family are listed below. Exposure to these maximum rating conditions for extended periods may affect device reliability. Functional operation of the device at these, or any other conditions above the parameters indicated in the operation listings of this specification, is not implied.

Absolute Maximum Ratings(1)

Ambient temperature under bias ..... -40°C to +125°C
Storage temperature ..... -65°C to +150°C
Voltage on V_{DD} with respect to V_{SS} ..... -0.3V to +4.0V
Voltage on any pin that is not 5V tolerant with respect to V_{SS}(3) ..... -0.3V to (V_{DD} + 0.3V)
Voltage on any 5V tolerant pin with respect to V_{SS} when $V_{DD} \geq 3.0V$(3) ..... -0.3V to +5.5V
Voltage on any 5V tolerant pin with respect to Vss when $V_{DD} < 3.0V$(3) ..... -0.3V to +3.6V
Maximum current out of V_{SS} pin ..... 300 mA
Maximum current into V_{DD} pin(2) ..... 300 mA
Maximum current sunk/sourced by any 4x I/O pin ..... 15 mA
Maximum current sunk/sourced by any 8x I/O pin ..... 25 mA
Maximum current sunk by all ports(2) ..... 200 mA

Note 1: Stresses above those listed under “Absolute Maximum Ratings” may cause permanent damage to the device. This is a stress rating only and functional operation of the device at those, or any other conditions above those indicated in the operation listings of this specification, is not implied. Exposure to maximum rating conditions for extended periods may affect device reliability.

2: Maximum allowable current is a function of device maximum power dissipation (see Table 24-2).

3: See the **“Pin Diagrams”** section for the 5V tolerant pins.

24.1 DC Characteristics

TABLE 24-1: OPERATING MIPS vs. VOLTAGE

Characteristic	V_{DD} Range (in Volts)	Temperature Range (in °C)	Maximum MIPS dsPIC33CH128MP508 Family	
			Master	Slave
—	3.0V to 3.6V	-40°C to +85°C	90	100
	3.0V to 3.6V	-40°C to +125°C	90	100

TABLE 24-2: THERMAL OPERATING CONDITIONS

Rating	Symbol	Min.	Typ.	Max.	Unit
Industrial Temperature Devices					
Operating Junction Temperature Range	T_J	-40	—	+125	°C
Operating Ambient Temperature Range	T_A	-40	—	+85	°C
Extended Temperature Devices					
Operating Junction Temperature Range	T_J	-40	—	+140	°C
Operating Ambient Temperature Range	T_A	-40	—	+125	°C
Power Dissipation: Internal Chip Power Dissipation: $P_{INT} = V_{DD} \times (I_{DD} - \Sigma I_{OH})$ I/O Pin Power Dissipation: $I/O = \Sigma (\{V_{DD} - V_{OH}\} \times I_{OH}) + \Sigma (V_{OL} \times I_{OL})$	P_D	$P_{INT} + P_{I/O}$			W
Maximum Allowed Power Dissipation	P_{DMAX}	$(T_J - T_A)/\theta_{JA}$			W

TABLE 24-3: THERMAL PACKAGING CHARACTERISTICS

Characteristic	Symbol	Typ.	Max.	Unit	Notes
Package Thermal Resistance, 80-Pin TQFP 12x12x1 mm	θ_{JA}	50.67	—	°C/W	1
Package Thermal Resistance, 64-Pin TQFP 10x10x1 mm	θ_{JA}	45.7	—	°C/W	1
Package Thermal Resistance, 64-Pin QFN 9x9 mm	θ_{JA}	18.7	—	°C/W	1
Package Thermal Resistance, 48-Pin TQFP 7x7 mm	θ_{JA}	62.76	—	°C/W	1
Package Thermal Resistance, 48-Pin UQFN 6x6 mm	θ_{JA}	27.6	—	°C/W	1
Package Thermal Resistance, 36-Pin UQFN 5x5 mm	θ_{JA}	29.2	—	°C/W	1
Package Thermal Resistance, 28-Pin UQFN 6x6 mm	θ_{JA}	22.41	—	°C/W	1
Package Thermal Resistance, 28-Pin SSOP 5.30 mm	θ_{JA}	52.84	—	°C/W	1

Note 1: Junction to ambient thermal resistance, Theta-JA (θ_{JA}) numbers are achieved by package simulations.

© 2017-2018 Microchip Technology Inc.

TABLE 24-4: OPERATING VOLTAGE SPECIFICATIONS

Operating Conditions: 3.0V to 3.6V (unless otherwise stated)(1) Operating temperature -40°C ≤ TA ≤ +85°C for Industrial -40°C ≤ TA ≤ +125°C for Extended							
Param No.	**Symbol**	**Characteristic**	**Min.**	**Typ.**	**Max.**	**Units**	**Conditions**
Operating Voltage							
DC10	VDD	**Supply Voltage**	3.0	—	3.6	V	
DC12	VDR	**RAM Retention Voltage(2)**	1.8	—	—	V	
DC16	VPOR	**VDD Start Voltage** to Ensure Internal Power-on Reset Signal	—	—	VSS	V	
DC17	SVDD	**VDD Rise Rate** to Ensure Internal Power-on Reset Signal	1.0	—	—	V/ms	0V-3V in 3 ms
BO10	VBOR	**BOR Event on VDD Transition** High-to-Low(3)	2.68	2.84	2.99	V	

Note 1: Device is functional at VBORMIN < VDD < VDDMIN. Analog modules (ADC and comparators) may have degraded performance.

2: This is the limit to which VDD may be lowered and the RAM contents will always be retained.

3: Parameters are characterized but not tested.

TABLE 24-5: DC CHARACTERISTICS: OPERATING CURRENT (IDD) (MASTER RUN/SLAVE RUN)

DC CHARACTERISTICS	Master (Run) + Slave (Run)		Standard Operating Conditions: 3.0V to 3.6V (unless otherwise stated) Operating temperature -40°C ≤ TA ≤ +85°C for Industrial -40°C ≤ TA ≤ +125°C for Extended			
Parameter No.	**Typ.**	**Max.**	**Units**	**Conditions**		
Operating Current (IDD)(1)						
DC20	11.6	13.7	mA	-40°C	3.3V	10 MIPS (N = 1, N2 = 5, N3 = 2, M = 50, FVCO = 400 MHz, FPLLO = 40 MHz)
	11.7	17.5	mA	+25°C		
	11.9	23.5	mA	+85°C		
	15.8	30.0	mA	+125°C		
DC21	15.9	18.3	mA	-40°C	3.3V	20 MIPS (N = 1, N2 = 5, N3 = 1, M = 60, FVCO = 480 MHz, FPLLO = 280 MHz)
	16.0	22.2	mA	+25°C		
	16.1	28.0	mA	+85°C		
	20.0	34.3	mA	+125°C		
DC22	23.7	26.9	mA	-40°C	3.3V	40 MIPS (N = 1, N2 = 3, N3 = 1, M = 60, FVCO = 480 MHz, FPLLO = 160 MHz)
	23.9	30.9	mA	+25°C		
	25.9	36.6	mA	+85°C		
	27.8	42.1	mA	+125°C		
DC23	37.3	42.0	mA	-40°C	3.3V	70 MIPS (N = 1, N2 = 2, N3 = 1, M = 70, FVCO = 560 MHz, FPLLO = 280 MHz)
	37.5	46.1	mA	+25°C		
	37.2	51.1	mA	+85°C		
	41.1	55.7	mA	+125°C		
DC24	45.0	50.4	mA	-40°C	3.3V	90 MIPS (N = 1, N2 = 2, N3 = 1, M = 90, FVCO = 720 MHz, FPLLO = 360 MHz)
	45.2	54.8	mA	+25°C		
	44.8	59.1	mA	+85°C		
	48.3	63.1	mA	+125°C		
DC25	45.5	51.0	mA	-40°C	3.3V	100 MIPS (N = 1, N2 = 1, N3 = 1, M = 50, FVCO = 400 MHz, FPLLO = 400 MHz); Slave runs at 100 MIPS but Master is still at 90 MIPS
	45.7	55.3	mA	+25°C		
	45.3	59.6	mA	+85°C		
	48.9	63.6	mA	+125°C		

Note 1: IDD is primarily a function of the operating voltage and frequency. Other factors, such as I/O pin loading and switching rate, oscillator type, internal code execution pattern and temperature, also have an impact on the current consumption. The test conditions for all IDD measurements are as follows:

- FIN = 8 MHz, FPFD = 8 MHz
- CLKO is configured as an I/O input pin in the Configuration Word
- All I/O pins are configured as output low
- $\overline{\text{MCLR}}$ = VDD, WDT and FSCM are disabled
- CPU, SRAM, program memory and data memory are operational
- No peripheral modules are operating or being clocked (all defined PMDx bits are set)
- CPU is executing `while(1)` statement
- JTAG is disabled

© 2017-2018 Microchip Technology Inc.

TABLE 24-6: DC CHARACTERISTICS: OPERATING CURRENT (IDD) (MASTER SLEEP/SLAVE RUN)

DC CHARACTERISTICS	Master (Sleep) + Slave (Run)		Standard Operating Conditions: 3.0V to 3.6V (unless otherwise stated) Operating temperature -40°C ≤ TA ≤ +85°C for Industrial -40°C ≤ TA ≤ +125°C for Extended			
Parameter No.	**Typ.**	**Max.**	**Units**	**Conditions**		
Operating Current (IDD)(1)						
DC20a	7.2	9.0	mA	-40°C	3.3V	10 MIPS (N = 1, N2 = 5, N3 = 2, M = 50, FVCO = 400 MHz, FPLLO = 40 MHz)
	7.3	12.6	mA	+25°C		
	7.6	18.9	mA	+85°C		
	11.6	25.6	mA	+125°C		
DC21a	9.0	10.9	mA	-40°C	3.3V	20 MIPS (N = 1, N2 = 5, N3 = 1, M = 50, FVCO = 400 MHz, FPLLO = 80 MHz)
	9.2	14.6	mA	+25°C		
	9.4	20.8	mA	+85°C		
	13.4	27.5	mA	+125°C		
DC22a	13.1	15.2	mA	-40°C	3.3V	40 MIPS (N = 1, N2 = 3, N3 = 1, M = 60, FVCO = 480 MHz, FPLLO = 160 MHz)
	13.2	19.0	mA	+25°C		
	13.4	25.1	mA	+85°C		
	17.3	31.5	mA	+125°C		
DC23a	18.6	21.2	mA	-40°C	3.3V	70 MIPS (N = 1, N2 = 2, N3 = 1, M = 70, FVCO = 560 MHz, FPLLO = 280 MHz)
	18.8	25.0	mA	+25°C		
	18.8	31.1	mA	+85°C		
	22.8	37.0	mA	+125°C		
DC24a	23.0	26.1	mA	-40°C	3.3V	90 MIPS (N = 1, N2 = 2, N3 = 1, M = 90, FVCO = 720 MHz, FPLLO = 360 MHz)
	23.2	30.0	mA	+25°C		
	23.2	35.8	mA	+85°C		
	27.1	41.4	mA	+125°C		
DC25a	23.5	26.6	mA	-40°C	3.3V	100 MIPS (N = 1, N2 = 1, N3 = 1, M = 50, FVCO = 400 MHz, FPLLO = 400 MHz)
	23.7	30.4	mA	+25°C		
	23.7	36.4	mA	+85°C		
	27.6	41.9	mA	+125°C		

Note 1: IDD is primarily a function of the operating voltage and frequency. Other factors, such as I/O pin loading and switching rate, oscillator type, internal code execution pattern and temperature, also have an impact on the current consumption. The test conditions for all IDD measurements are as follows:

- Oscillator is switched to EC+PLL mode in software
- CLKO is configured as an I/O input pin in the Configuration Word
- All I/O pins are configured as output low
- $\overline{\text{MCLR}}$ = VDD, WDT and FSCM are disabled
- CPU, SRAM, program memory and data memory are operational
- No peripheral modules are operating or being clocked (all defined PMDx bits are set)
- CPU is executing `while(1)` statement
- JTAG is disabled

TABLE 24-7: DC CHARACTERISTICS: OPERATING CURRENT (IDD) (MASTER RUN/SLAVE SLEEP)

DC CHARACTERISTICS	Master (Run) + Slave (Sleep)		Standard Operating Conditions: 3.0V to 3.6V (unless otherwise stated) Operating temperature -40°C ≤ TA ≤ +85°C for Industrial -40°C ≤ TA ≤ +125°C for Extended			
Parameter No.	**Typ.**	**Max.**	**Units**	**Conditions**		
Operating Current (IDD)(1)						
DC20b	7.9	9.8	mA	-40°C	3.3V	10 MIPS (N = 1, N2 = 5, N3 = 2, M = 50, FVCO = 400 MHz, FPLLO = 40 MHz)
	8.0	13.4	mA	+25°C		
	8.2	19.5	mA	+85°C		
	12.2	26.3	mA	+125°C		
DC21b	10.3	12.4	mA	-40°C	3.3V	20 MIPS (N = 1, N2 = 5, N3 = 1, M = 50, FVCO = 400 MHz, FPLLO = 80 MHz)
	10.5	16.0	mA	+25°C		
	10.6	22.1	mA	+85°C		
	14.6	28.7	mA	+125°C		
DC22b	14.2	16.5	mA	-40°C	3.3V	40 MIPS (N = 1, N2 = 3, N3 = 1, M = 60, FVCO = 480 MHz, FPLLO = 160 MHz)
	14.4	20.3	mA	+25°C		
	14.5	26.3	mA	+85°C		
	18.4	32.6	mA	+125°C		
DC23b	22.3	25.4	mA	-40°C	3.3V	70 MIPS (N = 1, N2 = 2, N3 = 1, M = 70, FVCO = 560 MHz, FPLLO = 280 MHz)
	22.5	29.4	mA	+25°C		
	22.4	34.9	mA	+85°C		
	26.4	40.7	mA	+125°C		
DC24b	25.6	29.0	mA	-40°C	3.3V	90 MIPS (N = 1, N2 = 2, N3 = 1, M = 90, FVCO = 720 MHz, FPLLO = 360 MHz)
	25.8	33.1	mA	+25°C		
	25.7	38.2	mA	+85°C		
	29.4	43.8	mA	+125°C		

Note 1: IDD is primarily a function of the operating voltage and frequency. Other factors, such as I/O pin loading and switching rate, oscillator type, internal code execution pattern and temperature, also have an impact on the current consumption. The test conditions for all IDD measurements are as follows:

- FIN = 8 MHz, FPFD = 8 MHz
- CLKO is configured as an I/O input pin in the Configuration Word
- All I/O pins are configured as output low
- $\overline{\text{MCLR}}$ = VDD, WDT and FSCM are disabled
- CPU, SRAM, program memory and data memory are operational
- No peripheral modules are operating or being clocked (all defined PMDx bits are set)
- CPU is executing `while(1)` statement
- JTAG is disabled

© 2017-2018 Microchip Technology Inc.

TABLE 24-8: DC CHARACTERISTICS: OPERATING CURRENT (I_{IDLE}) (MASTER IDLE/SLAVE IDLE)

DC CHARACTERISTICS	Master (Idle) + Slave (Idle)		Standard Operating Conditions: 3.0V to 3.6V (unless otherwise stated) Operating temperature -40°C ≤ TA ≤ +85°C for Industrial -40°C ≤ TA ≤ +125°C for Extended			
Parameter No.	**Typ.**	**Max.**	**Units**	**Conditions**		
Operating Current (I_{DD})(1)						
DC40	9.1	11.1	mA	-40°C	3.3V	10 MIPS (N = 1, N2 = 5, N3 = 2, M = 50, FVCO = 400 MHz, FPLLO = 40 MHz)
	9.3	14.8	mA	+25°C		
	9.4	20.7	mA	+85°C		
	13.4	27.5	mA	+125°C		
DC41	10.5	12.5	mA	-40°C	3.3V	20 MIPS (N = 1, N2 = 5, N3 = 1, M = 50, FVCO = 400 MHz, FPLLO = 80 MHz)
	10.6	16.3	mA	+25°C		
	10.8	22.2	mA	+85°C		
	14.7	28.8	mA	+125°C		
DC42	14.0	16.3	mA	-40°C	3.3V	40 MIPS (N = 1, N2 = 3, N3 = 1, M = 60, FVCO = 480 MHz, FPLLO = 160 MHz)
	14.2	20.1	mA	+25°C		
	14.3	26.0	mA	+85°C		
	18.2	32.3	mA	+125°C		
DC43	18.9	21.6	mA	-40°C	3.3V	70 MIPS (N = 1, N2 = 2, N3 = 1, M = 70, FVCO = 560 MHz, FPLLO = 280 MHz)
	19.1	25.5	mA	+25°C		
	19.1	31.2	mA	+85°C		
	23.0	37.2	mA	+125°C		
DC44	23.1	26.1	mA	-40°C	3.3V	90 MIPS (N = 1, N2 = 2, N3 = 1, M = 90, FVCO = 720 MHz, FPLLO = 360 MHz)
	23.2	30.0	mA	+25°C		
	23.2	34.8	mA	+85°C		
	27.1	41.4	mA	+125°C		
DC45	22.3	25.2	mA	-40°C	3.3V	100 MIPS (N = 1, N2 = 1, N3 = 1, M = 50, FVCO = 400 MHz, FPLLO = 400 MHz); Slave Idle at 100 MIPS but Master Idle at 90 MIPS
	22.4	29.2	mA	+25°C		
	22.4	38.7	mA	+85°C		
	26.3	40.6	mA	+125°C		

Note 1: I_{DD} is primarily a function of the operating voltage and frequency. Other factors, such as I/O pin loading and switching rate, oscillator type, internal code execution pattern and temperature, also have an impact on the current consumption. The test conditions for all I_{DD} measurements are as follows:

- F_{IN} = 8 MHz, F_{PFD} = 8 MHz
- CLKO is configured as an I/O input pin in the Configuration Word
- All I/O pins are configured as output low
- $\overline{MCLR}$ = V_{DD}, WDT and FSCM are disabled
- CPU, SRAM, program memory and data memory are operational
- No peripheral modules are operating or being clocked (all defined PMDx bits are set)
- CPU is executing `while(1)` statement
- JTAG is disabled

TABLE 24-9: DC CHARACTERISTICS: IDLE CURRENT (I_{IDLE}) (MASTER IDLE/SLAVE SLEEP)

DC CHARACTERISTICS	Master (Idle) + Slave (Sleep)		Standard Operating Conditions: 3.0V to 3.6V (unless otherwise stated) Operating temperature -40°C ≤ TA ≤ +85°C for Industrial -40°C ≤ TA ≤ +125°C for Extended			
Parameter No.	**Typ.**	**Max.**	**Units**	**Conditions**		
Idle Current (I_{IDLE})(1)						
DC40a	6.6	8.4	mA	-40°C	3.3V	10 MIPS (N = 1, N2 = 5, N3 = 2, M = 50, FVCO = 400 MHz, FPLLO = 40 MHz)
	6.7	11.9	mA	+25°C		
	6.9	17.9	mA	+85°C		
	10.9	24.9	mA	+125°C		
DC41a	7.3	9.2	mA	-40°C	3.3V	20 MIPS (N = 1, N2 = 5, N3 = 1, M = 50, FVCO = 400 MHz, FPLLO = 80 MHz)
	7.5	12.7	mA	+25°C		
	7.7	18.7	mA	+85°C		
	11.7	25.7	mA	+125°C		
DC42a	9.2	11.1	mA	-40°C	3.3V	40 MIPS (N = 1, N2 = 3, N3 = 1, M = 60, FVCO = 480 MHz, FPLLO = 160 MHz)
	9.4	14.8	mA	+25°C		
	9.5	20.7	mA	+85°C		
	13.5	27.5	mA	+125°C		
DC43a	11.8	13.9	mA	-40°C	3.3V	70 MIPS (N = 1, N2 = 2, N3 = 1, M = 70, FVCO = 560 MHz, FPLLO = 280 MHz)
	12.0	17.6	mA	+25°C		
	12.1	23.5	mA	+85°C		
	16.1	30.1	mA	+125°C		
DC44a	14.1	16.3	mA	-40°C	3.3V	90 MIPS (N = 1, N2 = 2, N3 = 1, M = 90, FVCO = 720 MHz, FPLLO = 360 MHz)
	14.2	20	mA	+25°C		
	14.3	25.9	mA	+85°C		
	18.2	32.3	mA	+125°C		

Note 1: Base Idle current (I_{IDLE}) is measured as follows:

- F_{IN} = 8 MHz, F_{PFD} = 8 MHz
- CLKO is configured as an I/O input pin in the Configuration Word
- All I/O pins are configured as output low
- $\overline{MCLR}$ = V_{DD}, WDT and FSCM are disabled
- No peripheral modules are operating or being clocked (all defined PMDx bits are set)
- The NVMSIDL bit (NVMCON<12>) = 1 (i.e., Flash regulator is set to standby while the device is in Idle mode)
- JTAG is disabled

© 2017-2018 Microchip Technology Inc.

TABLE 24-10: DC CHARACTERISTICS: IDLE CURRENT (I_{IDLE}) (MASTER SLEEP/SLAVE IDLE)

DC CHARACTERISTICS	Master (Sleep) + Slave (Idle)		Standard Operating Conditions: 3.0V to 3.6V (unless otherwise stated) Operating temperature -40°C ≤ TA ≤ +85°C for Industrial -40°C ≤ TA ≤ +125°C for Extended			
Parameter No.	**Typ.**	**Max.**	**Units**	**Conditions**		
Idle Current (I_{IDLE})(1)						
DC40b	6.0	7.8	mA	-40°C	3.3V	10 MIPS (N = 1, N2 = 5, N3 = 2, M = 50, FVCO = 400 MHz, FPLLO = 40 MHz)
	6.2	11.4	mA	+25°C		
	6.4	17.5	mA	+85°C		
	10.4	24.4	mA	+125°C		
DC41b	6.6	8.4	mA	-40°C	3.3V	20 MIPS (N = 1, N2 = 5, N3 = 1, M = 50, FVCO = 400 MHz, FPLLO = 80 MHz)
	6.8	12.0	mA	+25°C		
	7.0	18.1	mA	+85°C		
	11.0	25.0	mA	+125°C		
DC42b	8.3	10.1	mA	-40°C	3.3V	40 MIPS (N = 1, N2 = 3, N3 = 1, M = 60, FVCO = 480 MHz, FPLLO = 160 MHz)
	8.5	13.8	mA	+25°C		
	8.7	19.9	mA	+85°C		
	12.6	26.7	mA	+125°C		
DC43b	10.6	12.6	mA	-40°C	3.3V	70 MIPS (N = 1, N2 = 2, N3 = 1, M = 70, FVCO = 560 MHz, FPLLO = 280 MHz)
	10.8	16.3	mA	+25°C		
	10.9	22.3	mA	+85°C		
	14.9	29.0	mA	+125°C		
DC44b	12.6	14.7	mA	-40°C	3.3V	90 MIPS (N = 1, N2 = 2, N3 = 1, M = 90, FVCO = 720 MHz, FPLLO = 360 MHz)
	12.7	18.4	mA	+25°C		
	12.9	23.6	mA	+85°C		
	16.8	30.9	mA	+125°C		
DC45b	11.7	13.8	mA	-40°C	3.3V	100 MIPS (N = 1, N2 = 1, N3 = 1, M = 50, FVCO = 400 MHz, FPLLO = 400 MHz)
	11.9	17.6	mA	+25°C		
	12.1	24.4	mA	+85°C		
	16.0	30.1	mA	+125°C		

Note 1: Base Idle current (I_{IDLE}) is measured as follows:

- F_{IN} = 8 MHz, F_{PFD} = 8 MHz
- CLKO is configured as an I/O input pin in the Configuration Word
- All I/O pins are configured as output low
- $\overline{MCLR}$ = V_{DD}, WDT and FSCM are disabled
- No peripheral modules are operating or being clocked (all defined PMDx bits are set)
- The NVMSIDL bit (NVMCON<12>) = 1 (i.e., Flash regulator is set to standby while the device is in Idle mode)
- JTAG is disabled

TABLE 24-11: DC CHARACTERISTICS: POWER-DOWN CURRENT (I_{PD})

DC CHARACTERISTICS	Master Sleep + Slave Sleep		Standard Operating Conditions: 3.0V to 3.6V (unless otherwise stated) Operating temperature -40°C ≤ TA ≤ +85°C for Industrial -40°C ≤ TA ≤ +125°C for Extended		
Parameter No.	**Typ.**	**Max.**	**Units**	**Conditions**	
Power-Down Current (I_{PD})(1)					
DC60	3.2	4.8	mA	-40°C	3.3V
	3.4	8.2	mA	+25°C	
	3.7	14.3	mA	+85°C	
	7.6	21.5	mA	+125°C	

Note 1: I_{PD} (Sleep) current is measured as follows:

- CPU core is off, oscillator is configured in EC mode and External Clock is active; OSCI is driven with external square wave from rail-to-rail (EC clock overshoot/undershoot < 250 mV required)
- CLKO is configured as an I/O input pin in the Configuration Word
- All I/O pins are configured as output low
- $\overline{MCLR}$ = V_{DD}, WDT and FSCM are disabled
- All peripheral modules are disabled (PMDx bits are all set)
- The VREGS bit (RCON<8>) = 0 (i.e., core regulator is set to standby while the device is in Sleep mode)
- JTAG is disabled

TABLE 24-12: DC CHARACTERISTICS: WATCHDOG TIMER DELTA CURRENT (ΔI_{WDT})(1)

DC CHARACTERISTICS	Master and Slave		Standard Operating Conditions: 3.0V to 3.6V (unless otherwise stated) Operating temperature -40°C ≤ TA ≤ +85°C for Industrial -40°C ≤ TA ≤ +125°C for Extended		
Parameter No.	**Typ.**	**Max.**	**Units**	**Conditions**	
DC61d	2.9	—	μA	-40°C	3.3V
DC61a	2.7	—	μA	+25°C	
DC61b	3.9	—	μA	+85°C	
DC61c	5.5	—	μA	+125°C	

Note 1: The ΔI_{WDT} current is the additional current consumed when the module is enabled. This current should be added to the base I_{PD} current. All parameters are characterized but not tested during manufacturing.

© 2017-2018 Microchip Technology Inc.

TABLE 24-13: DC CHARACTERISTICS: PWM DELTA CURRENT(1,2,3)

DC CHARACTERISTICS	Master and Slave		Standard Operating Conditions: 3.0V to 3.6V (unless otherwise stated) Operating temperature -40°C ≤ TA ≤ +85°C for Industrial -40°C ≤ TA ≤ +125°C for Extended		
Parameter No.	**Typ.**	**Max.**	**Units**	**Conditions**	
DC100	6	8	mA	-40°C, 3.3V	PWM Output 500 MHz, PWM Input (AFPLLO = 500 MHz), AVCO = 1000 MHz, PLLFBD = 125, APLLDIV = 2
	6	6.7	mA	+25°C, 3.3V	
	6.3	8	mA	+125°C, 3.3V	
DC101	4.9	6	mA	-40°C, 3.3V	PWM Output 500 MHz, PWM Input (AFPLLO = 400 MHz), AVCO = 400 MHz, PLLFBD = 50, APLLDIV = 1
	4.9	5.5	mA	+25°C, 3.3V	
	4.9	5.6	mA	+125°C, 3.3V	
DC102	2.6	3.4	mA	-40°C, 3.3V	PWM Output 500 MHz, PWM Input (AFPLLO = 200 MHz), AVCO = 400 MHz, PLLFBD = 50, APLLDIV = 2
	2.7	3	mA	+25°C, 3.3V	
	2.7	3.2	mA	+125°C, 3.3V	
DC103	1.5	2.9	mA	-40°C, 3.3V	PWM Output 500 MHz, PWM Input (AFPLLO = 100 MHz), AVCO = 400 MHz, PLLFBD = 50, APLLDIV = 4
	1.5	2.1	mA	+25°C, 3.3V	
	1.5	2.2	mA	+125°C, 3.3V	

Note 1: The APLL current is not included. The APLL current will be the same if more than one PWM or all eight PWMs are running.

2: Delta current is for the one instance of PWM running.

3: PWM configured for Low-Resolution mode. All parameters are characterized but not tested during manufacturing.

TABLE 24-14: DC CHARACTERISTICS: APLL DELTA CURRENT

DC CHARACTERISTICS	Master or Slave(2)		Standard Operating Conditions: 3.0V to 3.6V (unless otherwise stated) Operating temperature -40°C ≤ TA ≤ +85°C for Industrial -40°C ≤ TA ≤ +125°C for Extended		
Parameter No.	**Typ.**	**Max.**	**Units**	**Conditions(1)**	
DC110	—	9.4	mA	-40°C.,3.3V	AFPLLO @ 500 MHz, AVCO = 1000 MHz, PLLFBD = 125, APLLDIV = 2
	7.2	9.4	mA	+25°C,3.3V	
	—	18	mA	+125°C,3.3V	
DC111	—	5.7	mA	-40°C.,3.3V	AFPLLO @ 400 MHz, AVCO = 400 MHz, PLLFBD = 50, APLLDIV = 1
	5	5.8	mA	+25°C,3.3V	
	—	14	mA	+125°C,3.3V	
DC112	—	4.7	mA	-40°C.,3.3V	AFPLLO @ 200 MHz, AVCO = 400 MHz, PLLFBD = 50, APLLDIV = 2
	2.9	4.7	mA	+25°C,3.3V	
	—	14	mA	+125°C,3.3V	
DC113	—	4	mA	-40°C.,3.3V	AFPLLO @ 100 MHz, AVCO = 400 MHz, PLLFBD = 50, APLLDIV = 4
	2.3	4	mA	+25°C,3.3V	
	—	12	mA	+125°C,3.3V	

Note 1: The APLL current will be the same if more than one PWM or DAC is run to the APLL clock. All parameters are characterized but not tested during manufacturing.

2: Current is for the APLL for the Master or Slave, not the combined current.

TABLE 24-15: DC CHARACTERISTICS: ADC Δ CURRENT

DC CHARACTERISTICS	Master(1)		Slave(2)		Standard Operating Conditions: 3.0V to 3.6V (unless otherwise stated) Operating temperature -40°C ≤ TA ≤ +85°C for Industrial -40°C ≤ TA ≤ +125°C for Extended		
Parameter No.	**Typ.**	**Max.**	**Typ.**	**Max.**	**Units**	**Conditions**	
DC120	—	6.5	—	14	mA	-40°C	3.3V
	5.5	6	9	14	mA	+25°C	3.3V
	—	7.1	—	15	mA	+125°C	3.3V

Note 1: Master shared core continuous conversion; TAD = 14.3 nS (3.5 Msps Conversion rate).

2: Slave dedicated core continuous conversion on all 3 SAR cores; TAD = 14.3 nS (3.5 Msps conversion rate). All parameters are characterized but not tested during manufacturing.

TABLE 24-16: DC CHARACTERISTICS: COMPARATOR + DAC DELTA CURRENT

DC CHARACTERISTICS	Master or Slave		Standard Operating Conditions: 3.0V to 3.6V (unless otherwise stated) Operating temperature -40°C ≤ TA ≤ +85°C for Industrial -40°C ≤ TA ≤ +125°C for Extended		
Parameter No.	**Typ.**	**Max.**	**Units**	**Conditions**	
DC130	—	2.8	mA	-40°C, 3.3V	AFPLLO @ 500 MHz(1)
	1.8	2.6	mA	+25°C, 3.3V	AFPLLO @ 500 MHz(1)
	—	3	mA	+125°C, 3.3V	AFPLLO @ 500 MHz(1)
DC131	—	1.6	mA	-40°C, 3.3V	AFPLLO @ 250 MHz(1)
	1.2	1.5	mA	+25°C, 3.3V	AFPLLO @ 250 MHz(1)
	—	1.7	mA	+125°C, 3.3V	AFPLLO @ 250 MHz(1)

Note 1: The APLL current is not included. All parameters are characterized but not tested during manufacturing.

TABLE 24-17: DC CHARACTERISTICS: PGA DELTA CURRENT(1)

DC CHARACTERISTICS	Slave		Standard Operating Conditions: 3.0V to 3.6V (unless otherwise stated) Operating temperature -40°C ≤ TA ≤ +85°C for Industrial -40°C ≤ TA ≤ +125°C for Extended		
Parameter No.	**Typ.**	**Max.**	**Units**	**Conditions**	
DC141	—	0.5	mA	-40°C, 3.3V	
	0.4	0.65	mA	+25°C, 3.3V	
	—	1.1	mA	+125°C, 3.3V	

Note 1: All parameters are characterized but not tested during manufacturing.

© 2017-2018 Microchip Technology Inc.

TABLE 24-18: I/O PIN INPUT SPECIFICATIONS

Operating Conditions: 3.0V to 3.6V (unless otherwise stated) Operating temperature -40°C ≤ TA ≤ +85°C for Industrial -40°C ≤ TA ≤ +125°C for Extended							
Param No.	**Symbol**	**Characteristic**	**Min.**	**Typ.(1)**	**Max.**	**Units**	**Conditions**
	VIL	**Input Low Voltage**					
DI10		Any I/O Pin and $\overline{MCLR}$	VSS	—	0.2 VDD	V	
DI18		I/O Pins with SDAx, SCLx	VSS	—	0.3 VDD	V	SMBus disabled
DI19		I/O Pins with SDAx, SCLx	VSS	—	0.8	V	SMBus enabled
	VIH	**Input High Voltage**					
DI20		I/O Pins Not 5V Tolerant(3)	0.8 VDD	—	VDD	V	
		5V Tolerant I/O Pins and $\overline{MCLR}$(3)	0.8 VDD	—	5.5	V	
		5V Tolerant I/O Pins with SDAx, SCLx(3)	0.8 VDD	—	5.5	V	SMBus disabled
		5V Tolerant I/O Pins with SDAx, SCLx(3)	2.1	—	5.5	V	SMBus enabled
		I/O Pins with SDAx, SCLx Not 5V Tolerant(3)	0.8 VDD	—	VDD	V	SMBus disabled
		I/O Pins with SDAx, SCLx Not 5V Tolerant(3)	2.1	—	VDD	V	SMBus enabled
DI30	ICNPU	**Input Change Notification Pull-up Current(2,4)**	175	360	545	μA	VDD = 3.6V, VPIN = VSS
DI31	ICNPD	**Input Change Notification Pull-Down Current(4)**	65	215	360	μA	VDD = 3.6V, VPIN = VDD

Note 1: Data in "Typ." column is at 3.3V, +25°C unless otherwise stated.
2: Negative current is defined as current sourced by the pin.
3: See the **"Pin Diagrams"** section for the 5V tolerant I/O pins.
4: All parameters are characterized but not tested during manufacturing.

TABLE 24-19: I/O PIN INPUT SPECIFICATIONS

Operating Conditions: 3.0V to 3.6V (unless otherwise stated) Operating temperature -40°C ≤ TA ≤ +85°C for Industrial -40°C ≤ TA ≤ +125°C for Extended						
Param No.	**Symbol**	**Characteristic**	**Min.**	**Max.**	**Units**	**Conditions**
DI50	IIL	**Input Leakage Current(1)**				
		I/O Pins 5V Tolerant(2)	-700	+700	nA	VPIN = VSS or VDD
		I/O Pins Not 5V Tolerant(2)	-700	+700	nA	
		$\overline{MCLR}$	-700	+700	nA	
		OSCI	-700	+700	nA	XT and HS modes

Note 1: Negative current is defined as current sourced by the pin.
2: See the **"Pin Diagrams"** section for the 5V tolerant I/O pins. All parameters are characterized but not tested during manufacturing.

TABLE 24-20: I/O PIN INPUT INJECTION CURRENT SPECIFICATIONS

Operating Conditions: 3.0V to 3.6V (unless otherwise stated)
Operating temperature -40°C ≤ TA ≤ +85°C for Industrial
-40°C ≤ TA ≤ +125°C for Extended

Param No.	Symbol	Characteristic	Min.	Max.	Units	Conditions
DI60a	I_{ICL}	**Input Low Injection Current**	0	-5(1,4)	mA	All pins
DI60b	I_{ICH}	**Input High Injection Current**	0	+5(2,3,4)	mA	All pins, excepting all 5V tolerant pins and SOSCI
DI60c	$\sum I_{ICT}$	**Total Input Injection Current (sum of all I/O and control pins)(5)**	-20	+20	mA	Absolute instantaneous sum of all ± input injection currents from all I/O pins (| I_{ICL} | + | I_{ICH} |) ≤ $\sum I_{ICT}$

Note 1: V_{IL} Source < (V_{SS} – 0.3).
2: V_{IH} Source > (V_{DD} + 0.3) for non-5V tolerant pins only.
3: 5V tolerant pins do not have an internal high-side diode to V_{DD}, and therefore, cannot tolerate any "positive" input injection current.
4: Injection currents can affect the ADC results.
5: Any number and/or combination of I/O pins, not excluded under I_{ICL} or I_{ICH} conditions, are permitted in the sum.

TABLE 24-21: I/O PIN OUTPUT SPECIFICATIONS

Operating Conditions: 3.0V to 3.6V (unless otherwise stated)
Operating temperature -40°C ≤ TA ≤ +85°C for Industrial
-40°C ≤ TA ≤ +125°C for Extended

Param.	Symbol	Characteristic	Min.	Typ.	Max.	Units	Conditions
DO10	V_{OL}	**Output Low Voltage** 4x Sink Driver Pins	—	—	0.42	V	V_{DD} = 3.6V, I_{OL} < 9 mA
		Output Low Voltage 8x Sink Driver Pins(1)	—	—	0.4	V	V_{DD} = 3.6V, I_{OL} < 11 mA
DO20	V_{OH}	**Output High Voltage** 4x Source Driver Pins	2.4	—	—	V	V_{DD} = 3.6V, I_{OH} > -8 mA
		Output High Voltage 8x Source Driver Pins(1)	2.4	—	—	V	V_{DD} = 3.6V, I_{OH} > -12 mA

Note 1: The 8x sink/source pins are RB1, RC8, RC9 and RD8 pins; all other ports are 4x sink drivers.

© 2017-2018 Microchip Technology Inc.

TABLE 24-22: ELECTRICAL CHARACTERISTICS: BOR

DC CHARACTERISTICS			Standard Operating Conditions: 3.0V to 3.6V (unless otherwise stated)[1] Operating temperature -40°C ≤ TA ≤ +85°C for Industrial -40°C ≤ TA ≤ +125°C for Extended				
Param No.	**Symbol**	**Characteristic**	**Min.[2]**	**Typ.**	**Max.**	**Units**	**Conditions**
BO10	VBOR	BOR Event on VDD Transition High-to-Low	2.68	2.96	2.99	V	VDD (**Note 2**)

Note 1: Device is functional at VBORMIN < VDD < VDDMIN, but will have degraded performance. Device functionality is tested, but not characterized. Analog modules (ADC, PGAs and comparators) may have degraded performance.

2: Parameters are for design guidance only and are not tested in manufacturing.

TABLE 24-23: PROGRAM MEMORY

Operating Conditions: 3.0V to 3.6V (unless otherwise stated) Operating temperature -40°C ≤ TA ≤ +85°C for Industrial -40°C ≤ TA ≤ +125°C for Extended						
Param No.	**Symbol**	**Characteristic**	**Min.**	**Max.**	**Units**	**Conditions**
		Program Flash Memory				
D130	EP	Cell Endurance	10,000	—	E/W	-40°C to +125°C
D131	VPR	VDD for Read	3.0	3.6	V	
D132b	VPEW	VDD for Self-Timed Write	3.0	3.6	V	
D134	TRETD	Characteristic Retention	20	—	Year	Provided no other specifications are violated, -40°C to +125°C
D137a	TPE	Page Erase Time	15.3	16.82	ms	TPE = 128,454 FRC cycles (**Note 1**)
D138a	TWW	Word Write Time	47.7	52.3	µs	TWW = 400 FRC cycles (**Note 1**)
D139a	TRW	Row Write Time	2.0	2.2	ms	TRW = 16,782 FRC cycles (**Note 1**)

Note 1: Other conditions: FRC = 8 MHz, TUN<5:0> = `011111` (for Minimum), TUN<5:0> = `100000` (for Maximum). This parameter depends on the FRC accuracy (see Table 24-29) and the value of the FRC Oscillator Tuning register (see Register 6-4). For complete details on calculating the Minimum and Maximum time, see **Section 3.3.1 "Flash Programming Operations"**.

24.2 AC Characteristics and Timing Parameters

This section defines the dsPIC33CH128MP508 family AC characteristics and timing parameters.

TABLE 24-24: TEMPERATURE AND VOLTAGE SPECIFICATIONS – AC

AC CHARACTERISTICS	**Standard Operating Conditions: 3.0V to 3.6V (unless otherwise stated)** Operating temperature -40°C ≤ TA ≤ +85°C for Industrial -40°C ≤ TA ≤ +125°C for Extended Operating voltage VDD range as described in **Section 24.1 "DC Characteristics"**.

FIGURE 24-1: LOAD CONDITIONS FOR DEVICE TIMING SPECIFICATIONS

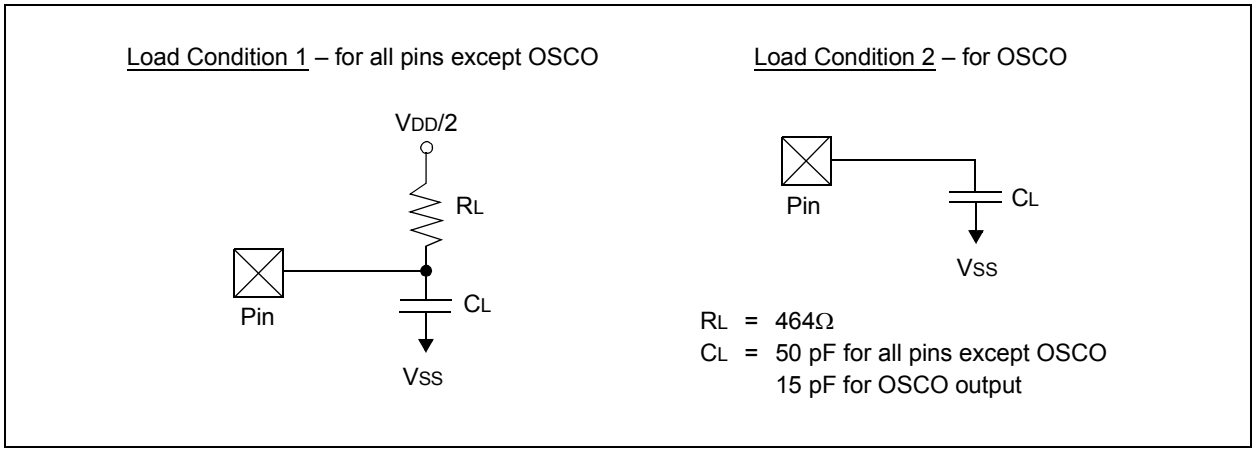

TABLE 24-25: CAPACITIVE LOADING REQUIREMENTS ON OUTPUT PINS

Param No.	Symbol	Characteristic	Min.	Typ.	Max.	Units	Conditions
DO50	COSCO	OSCO Pin	—	—	15	pF	In XT and HS modes, when External Clock is used to drive OSCI
DO56	CIO	All I/O Pins and OSCO	—	—	50	pF	EC mode
DO58	CB	SCLx, SDAx	—	—	400	pF	In I^2C mode

FIGURE 24-2: EXTERNAL CLOCK TIMING

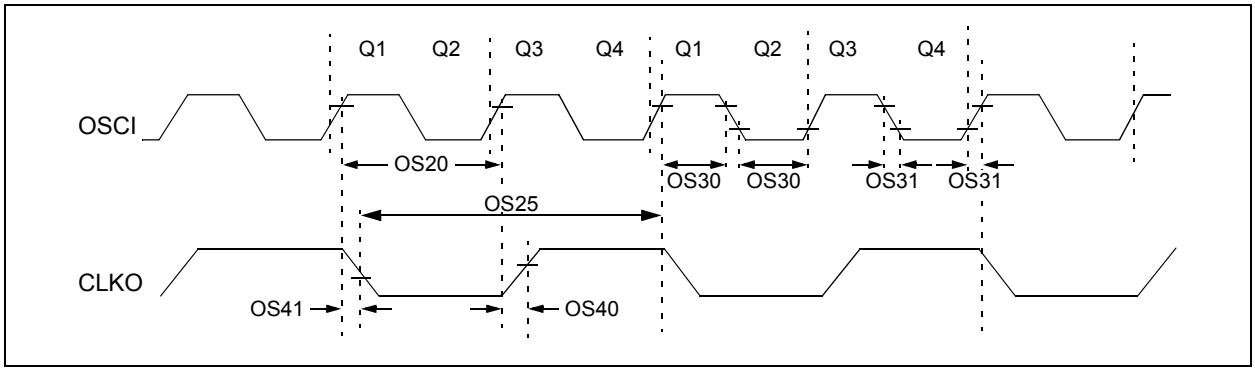

© 2017-2018 Microchip Technology Inc.

TABLE 24-26: EXTERNAL CLOCK TIMING REQUIREMENTS

AC CHARACTERISTICS			Standard Operating Conditions: 3.0V to 3.6V (unless otherwise stated) Operating temperature -40°C ≤ TA ≤ +85°C for Industrial -40°C ≤ TA ≤ +125°C for Extended				
Param No.	**Sym**	**Characteristic**	**Min.**	**Typ.(1)**	**Max.**	**Units**	**Conditions**
OS10	FIN	External CLKI Frequency (External Clocks allowed only in EC and ECPLL modes)	DC	—	64	MHz	EC
		Oscillator Crystal Frequency	3.5	—	10	MHz	XT
			10	—	32	MHz	HS
OS20	TOSC	TOSC = 1/FOSC	15.6	—	DC	ns	
OS25	TCY	Instruction Cycle Time(2)	10	—	DC	ns	
OS30	TosL, TosH	External Clock in (OSCI) High or Low Time	0.45 x TOSC	—	0.55 x TOSC	ns	EC
OS31	TosR, TosF	External Clock in (OSCI) Rise or Fall Time	—	—	20	ns	EC
OS40	TckR	CLKO Rise Time(3,4)	—	5.4	—	ns	
OS41	TckF	CLKO Fall Time(3,4)	—	6.4	—	ns	
OS42	GM	External Oscillator Transconductance(3)	2.7	—	4	mA/V	XTCFG<1:0> = 00, XTBST = 0
			4	—	7	mA/V	XTCFG<1:0> = 00, XTBST = 1
			4.5	—	7	mA/V	XTCFG<1:0> = 01, XTBST = 0
			6	—	11.9	mA/V	XTCFG<1:0> = 01, XTBST = 1
			5.9	—	9.7	mA/V	XTCFG<1:0> = 10, XTBST = 0
			6.9	—	15.9	mA/V	XTCFG<1:0> = 10, XTBST = 1
			6.7	—	12	mA/V	XTCFG<1:0> = 11, XTBST = 0
			7.5	—	19	mA/V	XTCFG<1:0> = 11, XTBST = 1

Note 1: Data in “Typ.” column is at 3.3V, +25°C unless otherwise stated.

2: Instruction cycle period (TCY) equals two times the input oscillator time base period. All specified values are based on characterization data for that particular oscillator type, under standard operating conditions, with the device executing code. Exceeding these specified limits may result in an unstable oscillator operation and/or higher than expected current consumption. All devices are tested to operate at “Minimum” values with an External Clock applied to the OSCI pin. When an External Clock input is used, the “Maximum” cycle time limit is “DC” (no clock) for all devices.

3: Measurements are taken in EC mode. The CLKO signal is measured on the OSCO pin.

4: This parameter is characterized but not tested in manufacturing.

TABLE 24-27: PLL CLOCK TIMING SPECIFICATIONS

AC CHARACTERISTICS			Standard Operating Conditions: 3.0V to 3.6V (unless otherwise stated) Operating temperature -40°C ≤ TA ≤ +85°C for Industrial -40°C ≤ TA ≤ +125°C for Extended				
Param No.	**Symbol**	**Characteristic**	**Min.**	**Typ.(1)**	**Max.**	**Units**	**Conditions**
OS50	FPLLI	PLL Voltage Controlled Oscillator (VCO) Input Frequency Range	8	—	64	MHz	ECPLL, XTPLL modes
OS51	FVCO	On-Chip VCO System Frequency	400	—	1600	MHz	
OS52	TLOCK	PLL Start-up Time (Lock Time)	—	60	—	μs	

Note 1: Data in “Typ.” column is at 3.3V, +25°C unless otherwise stated. Parameters are for design guidance only and are not tested.

TABLE 24-28: AUXILIARY PLL CLOCK TIMING SPECIFICATIONS

AC CHARACTERISTICS			Standard Operating Conditions: 3.0V to 3.6V (unless otherwise stated) Operating temperature -40°C ≤ TA ≤ +85°C for Industrial -40°C ≤ TA ≤ +125°C for Extended				
Param No.	**Symbol**	**Characteristic**	**Min.**	**Typ.(1)**	**Max.**	**Units**	**Conditions**
OS50	FPLLI	APLL Voltage Controlled Oscillator (VCO) Input Frequency Range	8	—	64	MHz	ECPLL, XTPLL modes
OS51	FVCO	On-Chip VCO System Frequency	400	—	1600	MHz	
OS52	TLOCK	APLL Start-up Time (Lock Time)	—	60	—	μs	

Note 1: Data in “Typ” column is at 3.3V, +25°C unless otherwise stated. Parameters are for design guidance only and are not tested in manufacturing.

© 2017-2018 Microchip Technology Inc.

TABLE 24-29: INTERNAL FRC ACCURACY

AC CHARACTERISTICS		Standard Operating Conditions: 3.0V to 3.6V (unless otherwise stated) Operating temperature -40°C ≤ TA ≤ +85°C for Industrial -40°C ≤ TA ≤ +125°C for Extended				
Param No.	**Characteristic**	**Min.**	**Typ.**	**Max.**	**Units**	**Conditions**
Internal FRC Accuracy @ FRC Frequency = 8 MHz(1)						
F20a	FRC	-3	—	+3	%	-40°C ≤ TA ≤ 0°C
		-1.5	—	+1.5	%	0°C ≤ TA ≤ +85°C
F20b	FRC	-2	—	+2	%	+85°C ≤ TA ≤ +125°C
F22	BFRC	-17	—	+17	%	-40°C ≤ TA ≤ +125°C

Note 1: Frequency is calibrated at +25°C and 3.3V. TUNx bits can be used to compensate for temperature drift.

TABLE 24-30: INTERNAL LPRC ACCURACY

AC CHARACTERISTICS		Standard Operating Conditions: 3.0V to 3.6V (unless otherwise stated) Operating temperature -40°C ≤ TA ≤ +85°C for Industrial -40°C ≤ TA ≤ +125°C for Extended					
Param No.	**Characteristic**	**Min.**	**Typ.**	**Max.**	**Units**	**Conditions**	
LPRC @ 32.768 kHz							
F21a	LPRC	-30	—	+30	%	-40°C ≤ TA ≤ -10°C	VDD = 3.0-3.6V
		-20	—	+20	%	-10°C ≤ TA ≤ +85°C	VDD = 3.0-3.6V
F21b	LPRC	-30	—	+30	%	+85°C ≤ TA ≤ +125°C	VDD = 3.0-3.6V

FIGURE 24-3: I/O TIMING CHARACTERISTICS

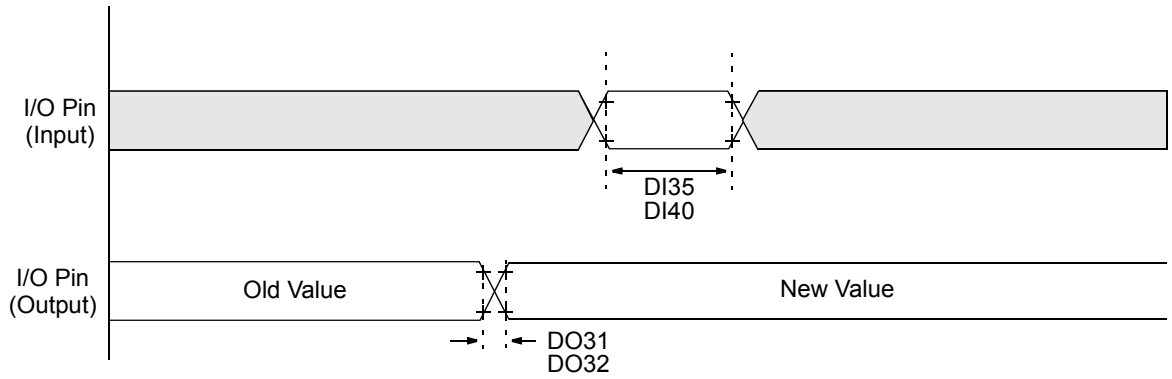

Note: Refer to Figure 24-1 for load conditions.

TABLE 24-31: I/O TIMING REQUIREMENTS

AC CHARACTERISTICS			Standard Operating Conditions: 3.0V to 3.6V (unless otherwise stated) Operating temperature -40°C ≤ TA ≤ +85°C for Industrial -40°C ≤ TA ≤ +125°C for Extended				
Param No.	**Symbol**	**Characteristic**	**Min.**	**Typ.(1)**	**Max.**	**Units**	**Conditions**
DO31	TIOR	Port Output Rise Time(2)	—	6.5	9.7	ns	
DO32	TIOF	Port Output Fall Time(2)	—	3.2	4.2	ns	
DI35	TINP	INTx Pin High or Low Time (input)	20	—	—	ns	
DI40	TRBP	CNx High or Low Time (input)	2	—	—	TCY	

Note 1: Data in "Typ." column is at 3.3V, +25°C unless otherwise stated.
2: This parameter is characterized but not tested in manufacturing.

FIGURE 24-4: BOR AND MASTER CLEAR RESET TIMING CHARACTERISTICS

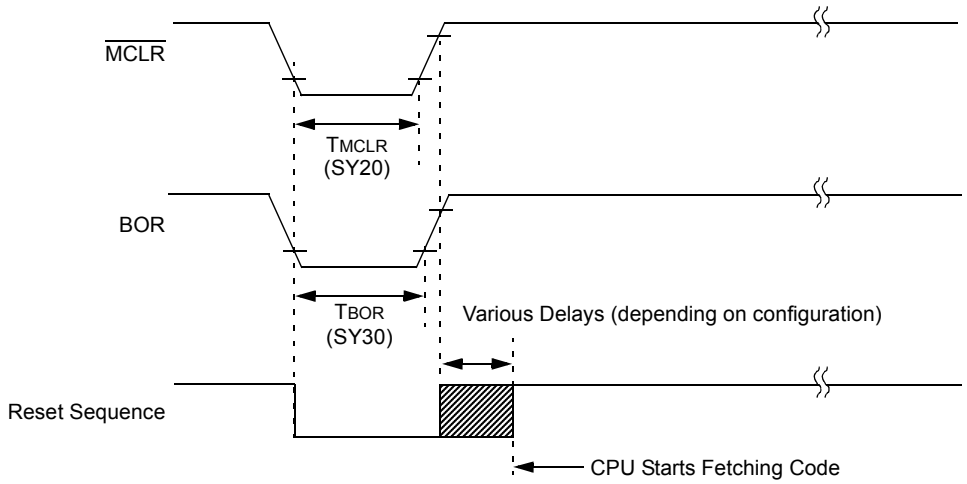

© 2017-2018 Microchip Technology Inc.

TABLE 24-32: RESET, WATCHDOG TIMER, OSCILLATOR START-UP TIMER, POWER-UP TIMER TIMING REQUIREMENTS

AC CHARACTERISTICS			Standard Operating Conditions: 3.0V to 3.6V (unless otherwise stated) Operating temperature -40°C ≤ TA ≤ +85°C for Industrial -40°C ≤ TA ≤ +125°C for Extended				
Param No.	**Symbol**	**Characteristic(1)**	**Min.**	**Typ.(2)**	**Max.**	**Units**	**Conditions**
SY00	TPU	Power-up Period	—	200	—	μs	
SY10	TOST	Oscillator Start-up Time	—	1024 TOSC	—	—	TOSC = OSCI period
SY13	TIOZ	I/O High-Impedance from $\overline{\text{MCLR}}$ Low or Watchdog Timer Reset	—	1.5	—	μs	
SY20	TMCLR	$\overline{\text{MCLR}}$ Pulse Width (low)	2	—	—	μs	
SY30	TBOR	BOR Pulse Width (low)	1	—	—	μs	
SY35	TFSCM	Fail-Safe Clock Monitor Delay	—	500	900	μs	-40°C to +85°C
SY36	TVREG	Voltage Regulator Standby-to-Active mode Transition Time	—	—	40	μs	Clock fail to BFRC switch
SY37	TOSCDFRC	FRC Oscillator Start-up Delay	—	—	15	μs	From POR event
SY38	TOSCDLPRC	LPRC Oscillator Start-up Delay	—	—	50	μs	From Reset event

Note 1: These parameters are characterized but not tested in manufacturing.

2: Data in “Typ.” column is at 3.3V, +25°C unless otherwise stated.

FIGURE 24-5: HIGH-SPEED PWMx MODULE FAULT TIMING CHARACTERISTICS

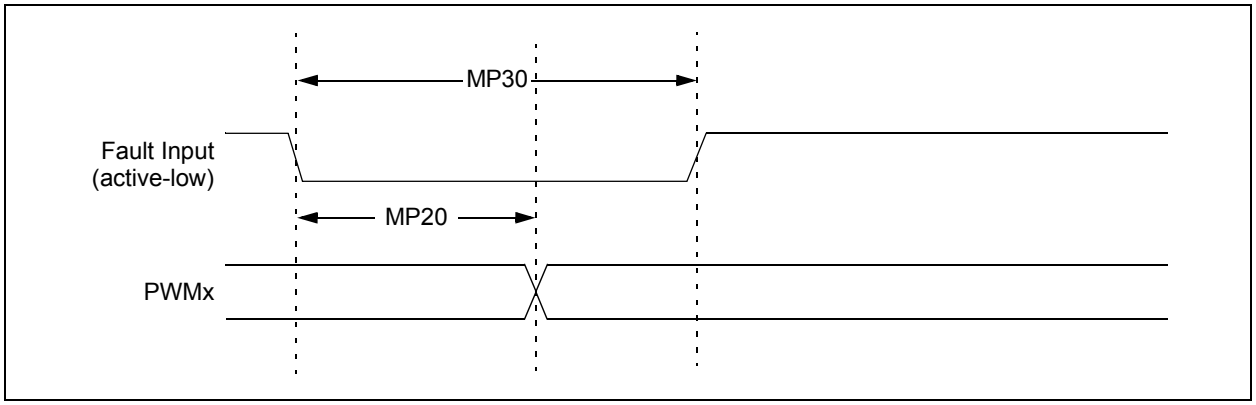

FIGURE 24-6: HIGH-SPEED PWMx MODULE TIMING CHARACTERISTICS

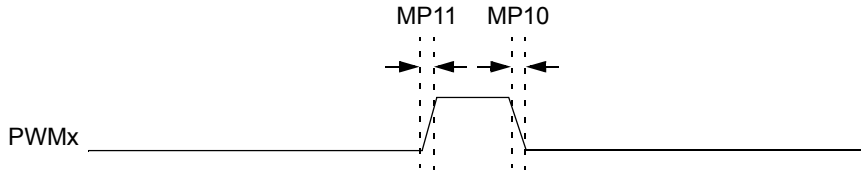

Note: Refer to Figure 24-1 for load conditions.

TABLE 24-33: HIGH-SPEED PWMx MODULE TIMING REQUIREMENTS

AC CHARACTERISTICS			Standard Operating Conditions: 3.0V to 3.6V (unless otherwise stated) Operating temperature -40°C ≤ TA ≤ +85°C for Industrial -40°C ≤ TA ≤ +125°C for Extended				
Param No.	**Symbol**	**Characteristic(1)**	**Min.**	**Typ.**	**Max.**	**Units**	**Conditions**
MP10	TFPWM	PWMx Output Fall Time	—	—	—	ns	See Parameter DO32
MP11	TRPWM	PWMx Output Rise Time	—	—	—	ns	See Parameter DO31
MP20	TFD	Fault Input ↓ to PWMx I/O Change	—	—	26	ns	PCI Inputs 19 through 22
MP30	TFH	Fault Input Pulse Width	8	—	—	ns	

Note 1: These parameters are characterized but not tested in manufacturing.

© 2017-2018 Microchip Technology Inc.

TABLE 24-34: SPIx MAXIMUM DATA/CLOCK RATE SUMMARY

SPI Master Transmit Only (Half-Duplex)	SPI Master Transmit/Receive (Full-Duplex)	SPI Slave Transmit/Receive (Full-Duplex)	CKE	Maximum Data Rate (MHz)	Condition
Figure 24-7 Table 24-35	—	—	0	15	Using PPS
				40	Dedicated Pin
Figure 24-8 Table 24-35	—	—	1	15	Using PPS
				40	Dedicated Pin
—	Figure 24-9 Table 24-36	—	0	9	Using PPS
				40	Dedicated Pin
—	Figure 24-10 Table 24-37	—	1	9	Using PPS
				40	Dedicated Pin
—	—	Figure 24-12 Table 24-39	0	15	Using PPS
				40	Dedicated Pin
—	—	Figure 24-13 Table 24-38	1	15	Using PPS
				40	Dedicated Pin

FIGURE 24-7: SPIx MASTER MODE (HALF-DUPLEX, TRANSMIT ONLY, CKE = 0) TIMING CHARACTERISTICS

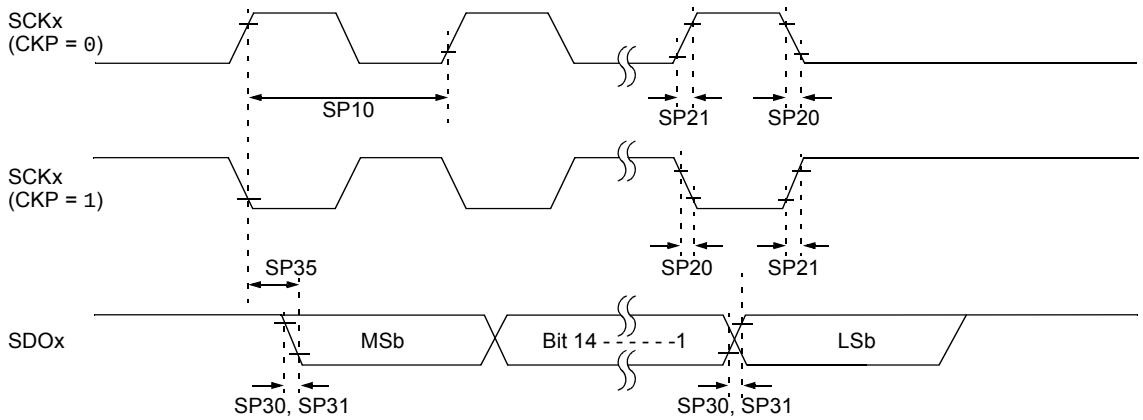

Note: Refer to Figure 24-1 for load conditions.

FIGURE 24-8: SPIx MASTER MODE (HALF-DUPLEX, TRANSMIT ONLY, CKE = 1) TIMING CHARACTERISTICS

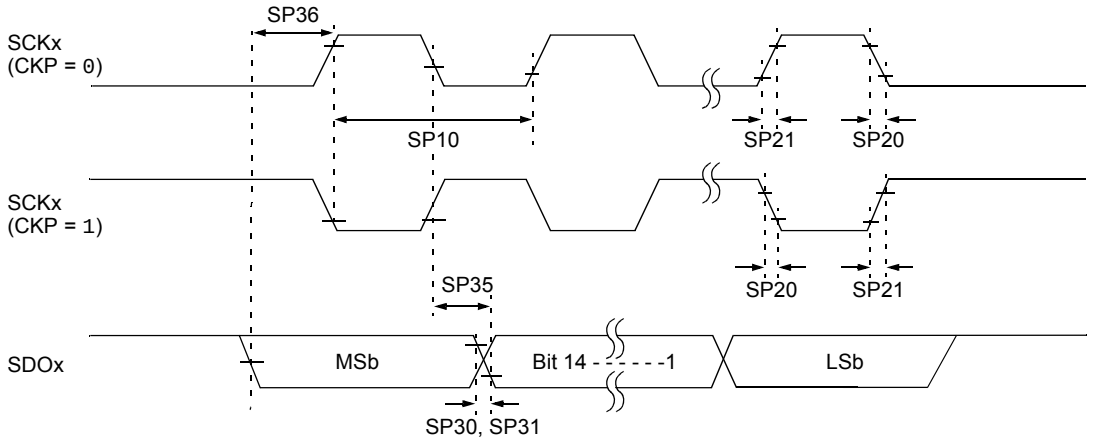

Note: Refer to Figure 24-1 for load conditions.

TABLE 24-35: SPIx MASTER MODE (HALF-DUPLEX, TRANSMIT ONLY) TIMING REQUIREMENTS

AC CHARACTERISTICS			Standard Operating Conditions: 3.0V to 3.6V (unless otherwise stated) Operating temperature -40°C ≤ TA ≤ +85°C for Industrial -40°C ≤ TA ≤ +125°C for Extended				
Param No.	**Symbol**	**Characteristic(1)**	**Min.**	**Typ.(2)**	**Max.**	**Units**	**Conditions**
SP10	FscP	Maximum SCKx Frequency	—	—	15	MHz	Using PPS pins
			—	—	40	MHz	SPI2 dedicated pins
SP20	TscF	SCKx Output Fall Time	—	—	—	ns	See Parameter DO32 **(Note 3)**
SP21	TscR	SCKx Output Rise Time	—	—	—	ns	See Parameter DO31 **(Note 3)**
SP30	TdoF	SDOx Data Output Fall Time	—	—	—	ns	See Parameter DO32 **(Note 3)**
SP31	TdoR	SDOx Data Output Rise Time	—	—	—	ns	See Parameter DO31 **(Note 3)**
SP35	TscH2doV, TscL2doV	SDOx Data Output Valid After SCKx Edge	—	6	20	ns	
SP36	TdiV2scH, TdiV2scL	SDOx Data Output Setup to First SCKx Edge	30	—	—	ns	Using PPS pins
			3	—	—	ns	SPI2 dedicated pins

Note 1: These parameters are characterized but not tested in manufacturing.
2: Data in “Typ.” column is at 3.3V, +25°C unless otherwise stated.
3: Assumes 50 pF load on all SPIx pins.

© 2017-2018 Microchip Technology Inc.

FIGURE 24-9: SPIx MASTER MODE (FULL-DUPLEX, CKE = 1, CKP = x, SMP = 1) TIMING CHARACTERISTICS

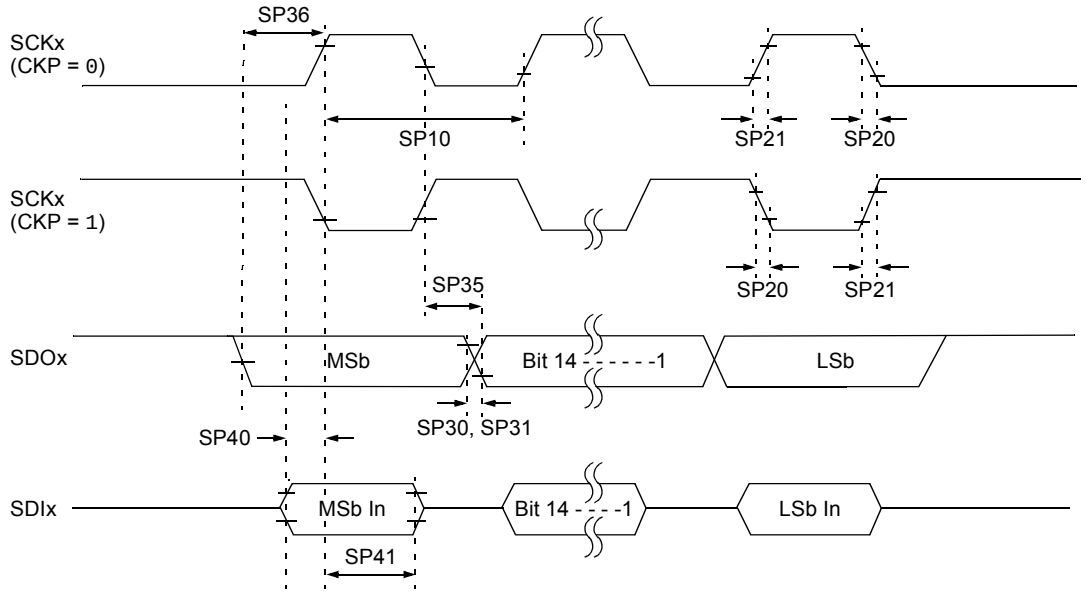

Note: Refer to Figure 24-1 for load conditions.

TABLE 24-36: SPIx MASTER MODE (FULL-DUPLEX, CKE = 1, CKP = x, SMP = 1) TIMING REQUIREMENTS

AC CHARACTERISTICS			Standard Operating Conditions: 3.0V to 3.6V (unless otherwise stated) Operating temperature -40°C ≤ TA ≤ +85°C for Industrial -40°C ≤ TA ≤ +125°C for Extended				
Param No.	**Symbol**	**Characteristic(1)**	**Min.**	**Typ.(2)**	**Max.**	**Units**	**Conditions**
SP10	FscP	Maximum SCKx Frequency	—	—	15	MHz	Using PPS pins
			—	—	40	MHz	SPI2 dedicated pins
SP20	TscF	SCKx Output Fall Time	—	—	—	ns	See Parameter DO32 **(Note 3)**
SP21	TscR	SCKx Output Rise Time	—	—	—	ns	See Parameter DO31 **(Note 3)**
SP30	TdoF	SDOx Data Output Fall Time	—	—	—	ns	See Parameter DO32 **(Note 3)**
SP31	TdoR	SDOx Data Output Rise Time	—	—	—	ns	See Parameter DO31 **(Note 3)**
SP35	TscH2doV, TscL2doV	SDOx Data Output Valid After SCKx Edge	—	6	20	ns	
SP36	TdoV2sc, TdoV2scL	SDOx Data Output Setup to First SCKx Edge	30	—	—	ns	Using PPS pins
			3	—	—	ns	SPI2 dedicated pins
SP40	TdiV2scH, TdiV2scL	Setup Time of SDIx Data Input to SCKx Edge	30	—	—	ns	Using PPS pins
			20	—	—	ns	SPI2 dedicated pins
SP41	TscH2diL, TscL2diL	Hold Time of SDIx Data Input to SCKx Edge	30	—	—	ns	Using PPS pins
			15	—	—	ns	SPI2 dedicated pins

Note 1: These parameters are characterized but not tested in manufacturing.
2: Data in "Typ." column is at 3.3V, +25°C unless otherwise stated.
3: Assumes 50 pF load on all SPIx pins.

FIGURE 24-10: SPIx MASTER MODE (FULL-DUPLEX, CKE = 0, CKP = x, SMP = 1) TIMING CHARACTERISTICS

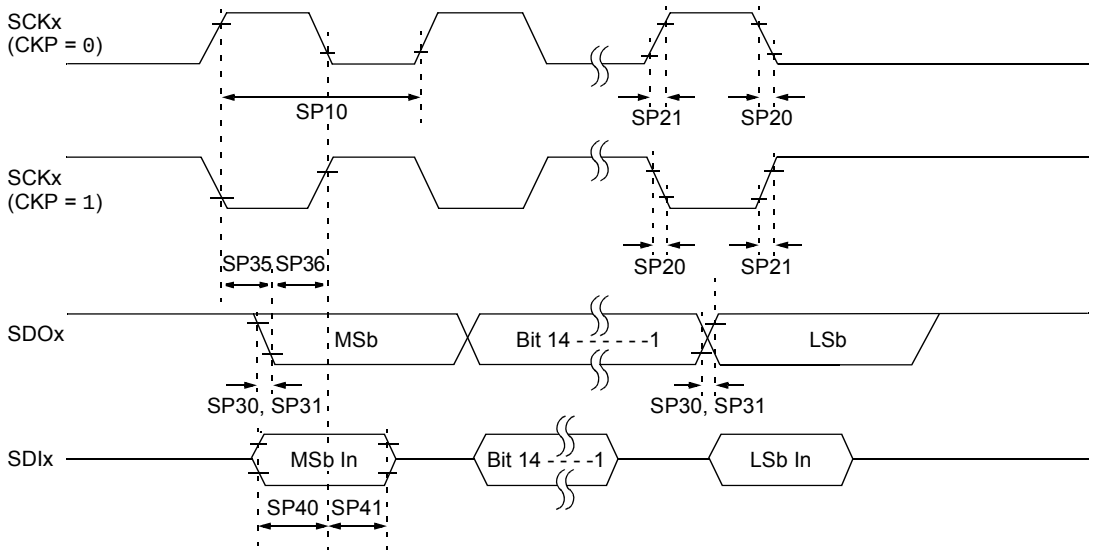

Note: Refer to Figure 24-1 for load conditions.

TABLE 24-37: SPIx MASTER MODE (FULL-DUPLEX, CKE = 0, CKP = x, SMP = 1) TIMING REQUIREMENTS

AC CHARACTERISTICS			Standard Operating Conditions: 3.0V to 3.6V (unless otherwise stated) Operating temperature -40°C ≤ TA ≤ +85°C for Industrial -40°C ≤ TA ≤ +125°C for Extended				
Param No.	**Symbol**	**Characteristic(1)**	**Min.**	**Typ.(2)**	**Max.**	**Units**	**Conditions**
SP10	FscP	Maximum SCKx Frequency	—	—	15	MHz	Using PPS pins
			—	—	40	MHz	SPI2 dedicated pins
SP20	TscF	SCKx Output Fall Time	—	—	—	ns	See Parameter DO32 **(Note 3)**
SP21	TscR	SCKx Output Rise Time	—	—	—	ns	See Parameter DO31 **(Note 3)**
SP30	TdoF	SDOx Data Output Fall Time	—	—	—	ns	See Parameter DO32 **(Note 3)**
SP31	TdoR	SDOx Data Output Rise Time	—	—	—	ns	See Parameter DO31 **(Note 3)**
SP35	TscH2doV, TscL2doV	SDOx Data Output Valid After SCKx Edge	—	6	20	ns	
SP36	TdoV2scH, TdoV2scL	SDOx Data Output Setup to First SCKx Edge	30	—	—	ns	Using PPS pins
			20	—	—	ns	SPI2 dedicated pins
SP40	TdiV2scH, TdiV2scL	Setup Time of SDIx Data Input to SCKx Edge	30	—	—	ns	Using PPS pins
			10	—	—	ns	SPI2 dedicated pins
SP41	TscH2diL, TscL2diL	Hold Time of SDIx Data Input to SCKx Edge	30	—	—	ns	Using PPS pins
			15	—	—	ns	SPI2 dedicated pins

Note 1: These parameters are characterized but not tested in manufacturing.
2: Data in "Typ." column is at 3.3V, +25°C unless otherwise stated.
3: Assumes 50 pF load on all SPIx pins.

© 2017-2018 Microchip Technology Inc.

FIGURE 24-11: SPIx SLAVE MODE (FULL-DUPLEX, CKE = 0, CKP = x, SMP = 0) TIMING CHARACTERISTICS

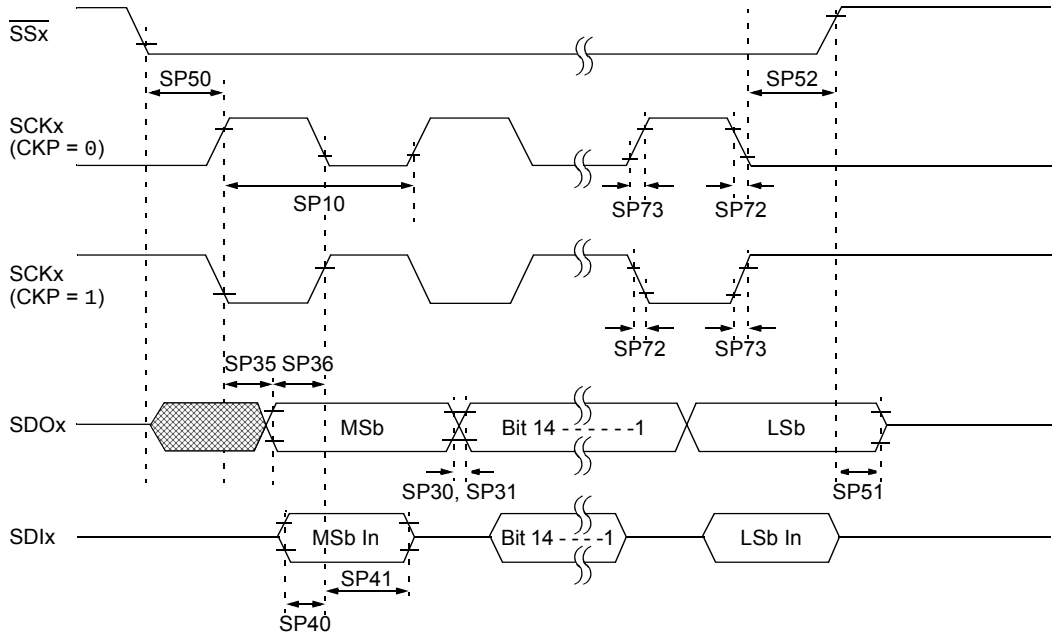

Note: Refer to Figure 24-1 for load conditions.

TABLE 24-38: SPIx SLAVE MODE (FULL-DUPLEX, CKE = 0, CKP = x, SMP = 0) TIMING REQUIREMENTS

AC CHARACTERISTICS			Standard Operating Conditions: 3.0V to 3.6V (unless otherwise stated) Operating temperature -40°C ≤ TA ≤ +85°C for Industrial -40°C ≤ TA ≤ +125°C for Extended				
Param No.	**Symbol**	**Characteristic(1)**	**Min.**	**Typ.(2)**	**Max.**	**Units**	**Conditions**
SP10	FscP	Maximum SCKx Input Frequency	—	—	15	MHz	Using PPS pins
			—	—	40	MHz	SPI2 dedicated pins
SP72	TscF	SCKx Input Fall Time	—	—	—	ns	See Parameter DO32 **(Note 3)**
SP73	TscR	SCKx Input Rise Time	—	—	—	ns	See Parameter DO31 **(Note 3)**
SP30	TdoF	SDOx Data Output Fall Time	—	—	—	ns	See Parameter DO32 **(Note 3)**
SP31	TdoR	SDOx Data Output Rise Time	—	—	—	ns	See Parameter DO31 **(Note 3)**
SP35	TscH2doV, TscL2doV	SDOx Data Output Valid After SCKx Edge	—	6	20	ns	
SP36	TdoV2scH, TdoV2scL	SDOx Data Output Setup to First SCKx Edge	30	—	—	ns	Using PPS pins
			20	—	—	ns	SPI2 dedicated pins
SP40	TdiV2scH, TdiV2scL	Setup Time of SDIx Data Input to SCKx Edge	30	—	—	ns	Using PPS pins
			10	—	—	ns	SPI2 dedicated pins
SP41	TscH2diL, TscL2diL	Hold Time of SDIx Data Input to SCKx Edge	30	—	—	ns	Using PPS pins
			15	—	—	ns	SPI2 dedicated pins
SP50	TssL2scH, TssL2scL	$\overline{SSx}$ ↓ to SCKx ↑ or SCKx ↓ Input	120	—	—	ns	
SP51	TssH2doZ	$\overline{SSx}$ ↑ to SDOx Output High-Impedance	8	—	50	ns	**(Note 3)**
SP52	TscH2ssH, TscL2ssH	$\overline{SSx}$ ↑ After SCKx Edge	1.5 TCY + 40	—	—	ns	**(Note 3)**

Note 1: These parameters are characterized but not tested in manufacturing.

2: Data in “Typ.” column is at 3.3V, +25°C unless otherwise stated.

3: Assumes 50 pF load on all SPIx pins.

© 2017-2018 Microchip Technology Inc.

FIGURE 24-12: SPIx SLAVE MODE (FULL-DUPLEX, CKE = 1, CKP = x, SMP = 0) TIMING CHARACTERISTICS

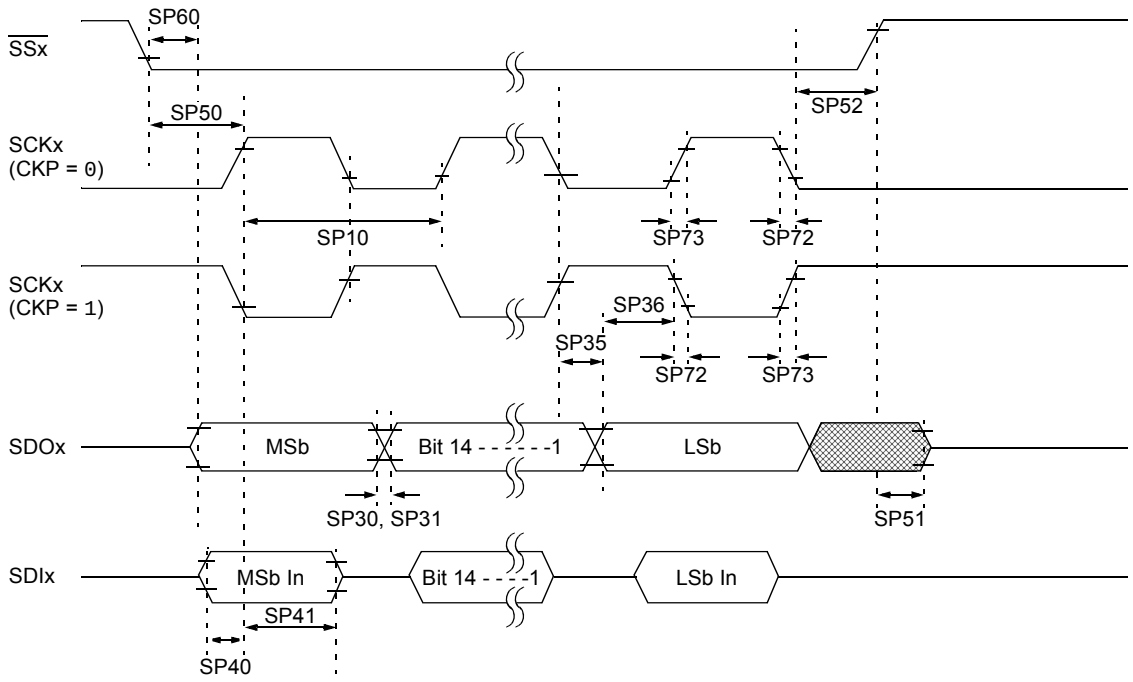

Note: Refer to Figure 24-1 for load conditions.

TABLE 24-39: SPIx SLAVE MODE (FULL-DUPLEX, CKE = 1, CKP = x, SMP = 0) TIMING REQUIREMENTS

AC CHARACTERISTICS			Standard Operating Conditions: 3.0V to 3.6V (unless otherwise stated) Operating temperature -40°C ≤ TA ≤ +85°C for Industrial -40°C ≤ TA ≤ +125°C for Extended				
Param No.	**Symbol**	**Characteristic(1)**	**Min.**	**Typ.(2)**	**Max.**	**Units**	**Conditions**
SP10	FscP	Maximum SCKx Input Frequency	—	—	15	MHz	Using PPS pins
			—	—	40	MHz	SPI2 dedicated pins
SP72	TscF	SCKx Input Fall Time	—	—	—	ns	See Parameter DO32 **(Note 3)**
SP73	TscR	SCKx Input Rise Time	—	—	—	ns	See Parameter DO31 **(Note 3)**
SP30	TdoF	SDOx Data Output Fall Time	—	—	—	ns	See Parameter DO32 **(Note 3)**
SP31	TdoR	SDOx Data Output Rise Time	—	—	—	ns	See Parameter DO31 **(Note 3)**
SP35	TscH2doV, TscL2doV	SDOx Data Output Valid After SCKx Edge	—	6	20	ns	
SP36	TdoV2scH, TdoV2scL	SDOx Data Output Setup to First SCKx Edge	30	—	—	ns	Using PPS pins
			20	—	—	ns	SPI2 dedicated pins
SP40	TdiV2scH, TdiV2scL	Setup Time of SDIx Data Input to SCKx Edge	30	—	—	ns	Using PPS pins
			10	—	—	ns	SPI2 dedicated pins
SP41	TscH2diL, TscL2diL	Hold Time of SDIx Data Input to SCKx Edge	30	—	—	ns	Using PPS pins
			15	—	—	ns	SPI2 dedicated pins
SP50	TssL2scH, TssL2scL	$\overline{SSx}$ ↓ to SCKx ↑ or SCKx ↓ Input	120	—	—	ns	
SP51	TssH2doZ	$\overline{SSx}$ ↑ to SDOx Output High-Impedance	8	—	50	ns	**(Note 3)**
SP52	TscH2ssH, TscL2ssH	$\overline{SSx}$ ↑ After SCKx Edge	1.5 TCY + 40	—	—	ns	**(Note 3)**
SP60	TssL2doV	SDOx Data Output Valid After $\overline{SSx}$ Edge	—	—	50	ns	

Note 1: These parameters are characterized but not tested in manufacturing.

2: Data in "Typ." column is at 3.3V, +25°C unless otherwise stated.

3: Assumes 50 pF load on all SPIx pins.

© 2017-2018 Microchip Technology Inc.

FIGURE 24-13: I2Cx BUS START/STOP BITS TIMING CHARACTERISTICS (MASTER MODE)

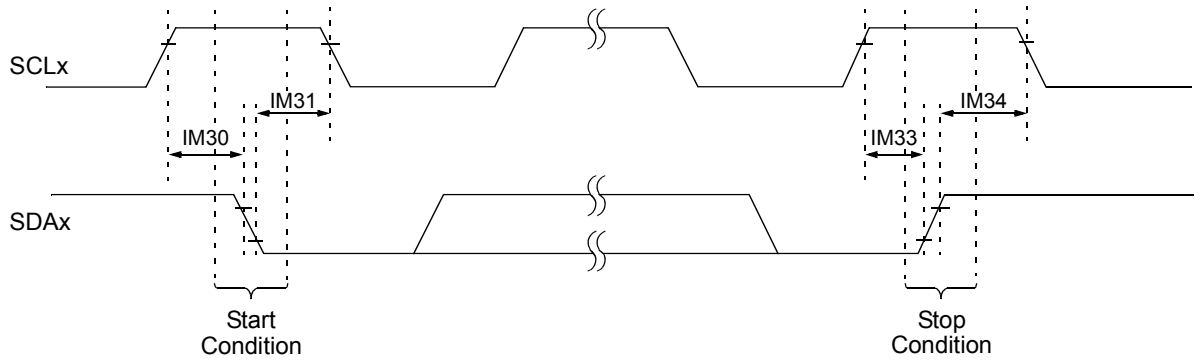

Note: Refer to Figure 24-1 for load conditions.

FIGURE 24-14: I2Cx BUS DATA TIMING CHARACTERISTICS (MASTER MODE)

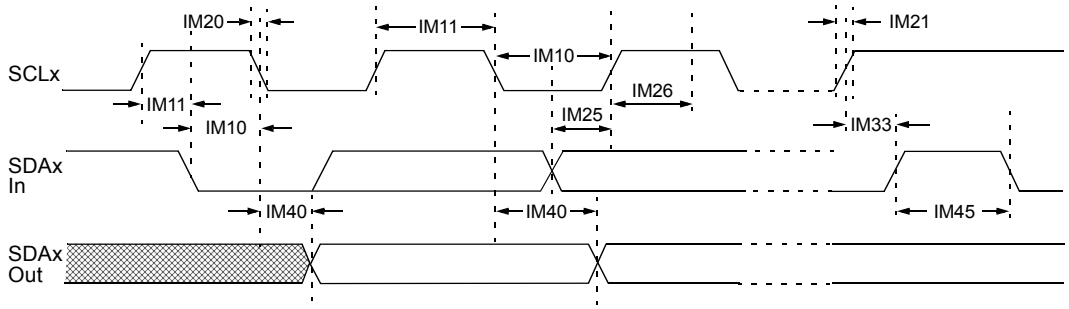

Note: Refer to Figure 24-1 for load conditions.

TABLE 24-40: I2Cx BUS DATA TIMING REQUIREMENTS (MASTER MODE)

AC CHARACTERISTICS				Standard Operating Conditions: 3.0V to 3.6V (unless otherwise stated) Operating temperature -40°C ≤ TA ≤ +85°C for Industrial -40°C ≤ TA ≤ +125°C for Extended			
Param No.	**Symbol**	**Characteristic[4]**		**Min.[1]**	**Max.**	**Units**	**Conditions**
IM10	TLO:SCL	Clock Low Time	100 kHz mode	TCY (BRG + 1)	—	μs	
			400 kHz mode	TCY (BRG + 1)	—	μs	
			1 MHz mode[2]	TCY (BRG + 1)	—	μs	
IM11	THI:SCL	Clock High Time	100 kHz mode	TCY (BRG + 1)	—	μs	
			400 kHz mode	TCY (BRG + 1)	—	μs	
			1 MHz mode[2]	TCY (BRG + 1)	—	μs	
IM20	TF:SCL	SDAx and SCLx Fall Time	100 kHz mode	—	300	ns	CB is specified to be from 10 to 400 pF
			400 kHz mode	20 x (VDD/5.5V)	300	ns	
			1 MHz mode[2]	—	120	ns	
IM21	TR:SCL	SDAx and SCLx Rise Time	100 kHz mode	—	1000	ns	CB is specified to be from 10 to 400 pF
			400 kHz mode	20 + 0.1 CB	300	ns	
			1 MHz mode[2]	—	120	ns	
IM25	TSU:DAT	Data Input Setup Time	100 kHz mode	250	—	ns	
			400 kHz mode	100	—	ns	
			1 MHz mode[2]	50	—	ns	
IM26	THD:DAT	Data Input Hold Time	100 kHz mode	0	—	μs	
			400 kHz mode	0	0.9	μs	
			1 MHz mode[2]	0	0.3	μs	
IM30	TSU:STA	Start Condition Setup Time	100 kHz mode	TCY (BRG + 1)	—	μs	Only relevant for Repeated Start condition
			400 kHz mode	TCY (BRG + 1)	—	μs	
			1 MHz mode[2]	TCY (BRG + 1)	—	μs	
IM31	THD:STA	Start Condition Hold Time	100 kHz mode	TCY (BRG + 1)	—	μs	After this period, the first clock pulse is generated
			400 kHz mode	TCY (BRG + 1)	—	μs	
			1 MHz mode[2]	TCY (BRG + 1)	—	μs	
IM33	TSU:STO	Stop Condition Setup Time	100 kHz mode	TCY (BRG + 1)	—	μs	
			400 kHz mode	TCY (BRG + 1)	—	μs	
			1 MHz mode[2]	TCY (BRG + 1)	—	μs	
IM34	THD:STO	Stop Condition Hold Time	100 kHz mode	TCY (BRG + 1)	—	μs	
			400 kHz mode	TCY (BRG + 1)	—	μs	
			1 MHz mode[2]	TCY (BRG + 1)	—	μs	
IM40	TAA:SCL	Output Valid from Clock	100 kHz mode	—	3450	ns	
			400 kHz mode	—	900	ns	
			1 MHz mode[2]	—	450	ns	
IM45	TBF:SDA	Bus Free Time	100 kHz mode	4.7	—	μs	Time the bus must be free before a new transmission can start
			400 kHz mode	1.3	—	μs	
			1 MHz mode[2]	0.5	—	μs	
IM50	CB	Bus Capacitive Loading		—	400	pF	
IM51	TPGD	Pulse Gobbler Delay		65	390	ns	**(Note 3)**

Note 1: BRG is the value of the I^2C Baud Rate Generator.

2: Maximum Pin Capacitance = 10 pF for all I2Cx pins (for 1 MHz mode only).

3: Typical value for this parameter is 130 ns.

4: These parameters are characterized but not tested in manufacturing.

© 2017-2018 Microchip Technology Inc.

FIGURE 24-15: I2Cx BUS START/STOP BITS TIMING CHARACTERISTICS (SLAVE MODE)

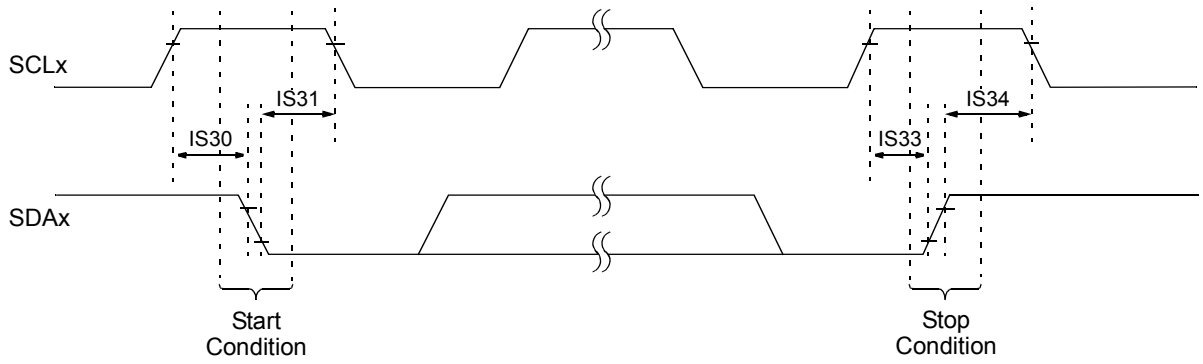

FIGURE 24-16: I2Cx BUS DATA TIMING CHARACTERISTICS (SLAVE MODE)

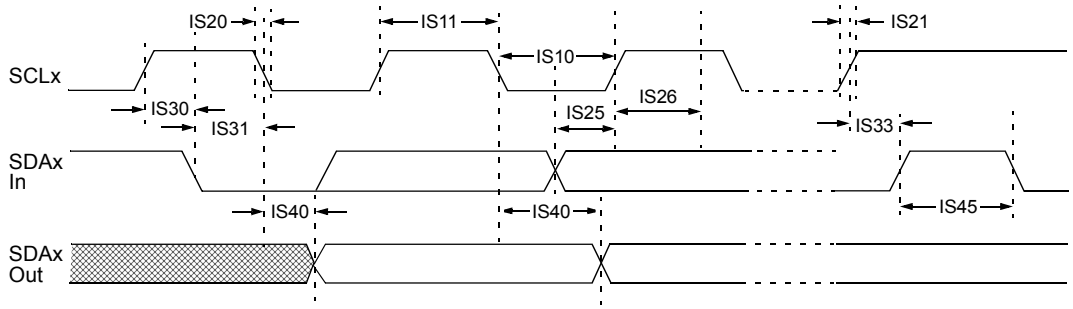

TABLE 24-41: I2Cx BUS DATA TIMING REQUIREMENTS (SLAVE MODE)

AC CHARACTERISTICS				Standard Operating Conditions: 3.0V to 3.6V (unless otherwise stated) Operating temperature -40°C ≤ TA ≤ +85°C for Industrial -40°C ≤ TA ≤ +125°C for Extended			
Param No.	**Symbol**	**Characteristic[3]**		**Min.**	**Max.**	**Units**	**Conditions**
IS10	TLO:SCL	Clock Low Time	100 kHz mode	4.7	—	μs	
			400 kHz mode	1.3	—	μs	
			1 MHz mode[1]	0.5	—	μs	
IS11	THI:SCL	Clock High Time	100 kHz mode	4.0	—	μs	Device must operate at a minimum of 1.5 MHz
			400 kHz mode	0.6	—	μs	Device must operate at a minimum of 10 MHz
			1 MHz mode[1]	0.28	—	μs	
IS20	TF:SCL	SDAx and SCLx Fall Time	100 kHz mode	—	300	ns	CB is specified to be from 10 to 400 pF
			400 kHz mode	20 x (VDD/5.5V)	300	ns	
			1 MHz mode[1]	20 x (VDD/5.5V)	120	ns	
IS21	TR:SCL	SDAx and SCLx Rise Time	100 kHz mode	20 + 0.1 CB	1000	ns	CB is specified to be from 10 to 400 pF
			400 kHz mode		300	ns	
			1 MHz mode[1]	—	120	ns	
IS25	TSU:DAT	Data Input Setup Time	100 kHz mode	250	—	ns	
			400 kHz mode	100	—	ns	
			1 MHz mode[1]	50	—	ns	
IS26	THD:DAT	Data Input Hold Time	100 kHz mode	0	—	μs	
			400 kHz mode	0	0.9	μs	
			1 MHz mode[1]	0	0.3	μs	
IS30	TSU:STA	Start Condition Setup Time	100 kHz mode	4.7	—	μs	Only relevant for Repeated Start condition
			400 kHz mode	0.6	—	μs	
			1 MHz mode[1]	0.26	—	μs	
IS31	THD:STA	Start Condition Hold Time	100 kHz mode	4.0	—	μs	After this period, the first clock pulse is generated
			400 kHz mode	0.6	—	μs	
			1 MHz mode[1]	0.26	—	μs	
IS33	TSU:STO	Stop Condition Setup Time	100 kHz mode	4	—	μs	
			400 kHz mode	0.6	—	μs	
			1 MHz mode[1]	0.26	—	μs	
IS34	THD:STO	Stop Condition Hold Time	100 kHz mode	> 0	—	μs	
			400 kHz mode	> 0	—	μs	
			1 MHz mode[1]	> 0		μs	
IS40	TAA:SCL	Output Valid from Clock	100 kHz mode	0	3540	ns	
			400 kHz mode	0	900	ns	
			1 MHz mode[1]	0	400	ns	
IS45	TBF:SDA	Bus Free Time	100 kHz mode	4.7	—	μs	Time the bus must be free before a new transmission can start
			400 kHz mode	1.3	—	μs	
			1 MHz mode[1]	0.5	—	μs	
IS50	CB	Bus Capacitive Loading		—	400	pF	
IS51	TPGD	Pulse Gobbler Delay		65	390	ns	(Note 2)

Note 1: Maximum Pin Capacitance = 10 pF for all I2Cx pins (for 1 MHz mode only).

2: Typical value for this parameter is 130 ns.

3: These parameters are characterized but not tested in manufacturing.

© 2017-2018 Microchip Technology Inc.

FIGURE 24-17: UARTx MODULE I/O TIMING CHARACTERISTICS

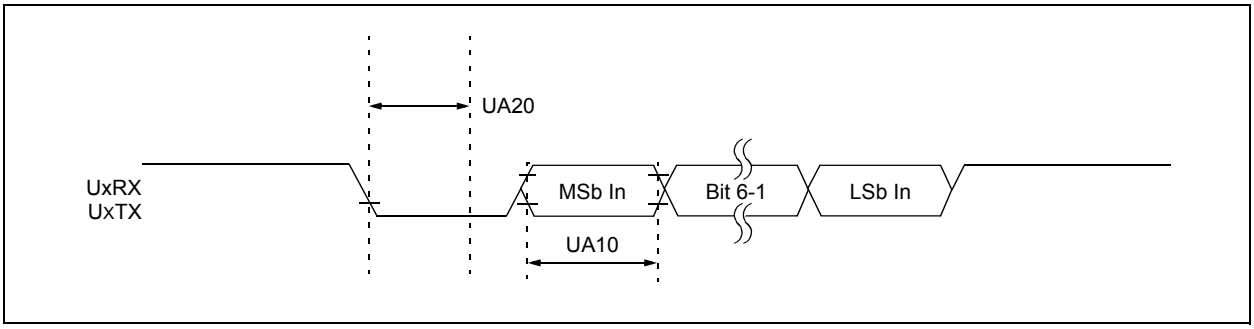

TABLE 24-42: UARTx MODULE I/O TIMING REQUIREMENTS

AC CHARACTERISTICS			Standard Operating Conditions: 3.0V to 3.6V (unless otherwise stated) Operating temperature -40°C ≤ TA ≤ +125°C				
Param No.	**Symbol**	**Characteristic(1)**	**Min.**	**Typ.(2)**	**Max.**	**Units**	**Conditions**
UA10	TUABAUD	UARTx Baud Time	66.67	—	—	ns	
UA11	FBAUD	UARTx Baud Frequency	—	—	15	Mbps	
UA20	TCWF	Start Bit Pulse Width to Trigger UARTx Wake-up	500	—	—	ns	

Note 1: These parameters are characterized but not tested in manufacturing.

2: Data in “Typ.” column is at 3.3V, +25°C unless otherwise stated. Parameters are for design guidance only and are not tested.

TABLE 24-43: ADC MODULE SPECIFICATIONS

Operating Conditions: 3.0V to 3.6V (unless otherwise stated)[4] Operating temperature -40°C ≤ TA ≤ +85°C for Industrial -40°C ≤ TA ≤ +125°C for Extended							
Param No.	**Symbol**	**Characteristics**	**Min.**	**Typical**	**Max.**	**Units**	**Conditions**
Analog Input							
AD12	VINH-VINL	Full-Scale Input Span	AVSS	—	AVDD	V	
AD14	VIN	Absolute Input Voltage	AVSS – 0.3	—	AVDD + 0.3	V	
AD17	RIN	Recommended Impedance of Analog Voltage Source	—	100	—	Ω	For minimum sampling time (**Note 1**)
AD66	VBG	Internal Voltage Reference Source	—	1.2	—	V	
ADC Accuracy							
AD20c	Nr	Resolution	12 data bits			bits	
AD21c	INL	Integral Nonlinearity	> -11.3	—	< 11.3	LSb	AVSS = 0V, AVDD = 3.3V
AD22c	DNL	Differential Nonlinearity	> -1.5	—	< 11.5	LSb	AVSS = 0V, AVDD = 3.3V
AD23c	GERR	Gain Error	> -12	—	< 12	LSb	AVSS = 0V, AVDD = 3.3V
AD24c	EOFF	Offset Error	> 7.5	—	< 7.5	LSb	AVSS = 0V, AVDD = 3.3V
Dynamic Performance							
AD31b	SINAD	Signal-to-Noise and Distortion	56	—	70	dB	(**Notes 2, 3**)
AD34b	ENOB	Effective Number of Bits	9	—	11.4	bits	(**Notes 2, 3**)

Note 1: These parameters are not characterized or tested in manufacturing.

2: These parameters are characterized but not tested in manufacturing.

3: Characterized with a 1 kHz sine wave.

4: The ADC module is functional at VBORMIN < VDD < VDDMIN, but with degraded performance. Unless otherwise stated, module functionality is ensured, but not characterized.

© 2017-2018 Microchip Technology Inc.

TABLE 24-44: ANALOG-TO-DIGITAL CONVERSION TIMING SPECIFICATIONS

AC CHARACTERISTICS			Standard Operating Conditions: 3.0V to 3.6V (unless otherwise stated)[2] Operating temperature -40°C ≤ TA ≤ +85°C for Industrial -40°C ≤ TA ≤ +125°C for Extended				
Param No.	**Symbol**	**Characteristics**	**Min.**	**Typ.[1]**	**Max.**	**Units**	**Conditions**
AD50	TAD	ADC Clock Period	14.28	—	—	ns	
AD51	FTP	Throughput Rate	—	—	3.5	Msps	Dedicated Cores 0 and 1
			—	—	3.5	Msps	Shared core

Note 1: These parameters are characterized but not tested in manufacturing.

2: The ADC module is functional at VBORMIN < VDD < VDDMIN, but with degraded performance. Unless otherwise stated, module functionality is ensured, but not characterized.

TABLE 24-45: HIGH-SPEED ANALOG COMPARATOR MODULE SPECIFICATIONS

Operating Conditions: 3.0V to 3.6V (unless otherwise stated)[2] Operating temperature -40°C ≤ TA ≤ +85°C for Industrial -40°C ≤ TA ≤ +125°C for Extended							
Param No.	**Symbol**	**Characteristic**	**Min.**	**Typ.**	**Max.**	**Units**	**Comments**
CM09	FIN	Input Frequency	400	500	550	MHz	
CM10	VIOFF	Input Offset Voltage	-20	—	+20	mV	
CM11	VICM	Input Common-Mode Voltage Range[1]	AVSS	—	AVDD	V	
CM13	CMRR	Common-Mode Rejection Ratio	60	—	—	dB	
CM14	TRESP	Large Signal Response	—	15	—	ns	V+ input step of 100 mV while V- input is held at AVDD/2
CM15	VHYST	Input Hysteresis	15	30	45	mV	Depends on HYSSEL<1:0>

Note 1: These parameters are for design guidance only and are not tested in manufacturing.

2: The comparator module is functional at VBORMIN < VDD < VDDMIN, but with degraded performance. Unless otherwise stated, module functionality is tested, but not characterized.

TABLE 24-46: DACx MODULE SPECIFICATIONS

Operating Conditions: 3.0V to 3.6V (unless otherwise stated) Operating temperature -40°C ≤ TA ≤ +85°C for Industrial -40°C ≤ TA ≤ +125°C for Extended							
Param No.	**Symbol**	**Characteristic**	**Min.**	**Typ.(1)**	**Max.**	**Units**	**Comments**
DA02	CVRES	Resolution	12			bits	
DA03	INL	Integral Nonlinearity Error	-38	—	0	LSB	
DA04	DNL	Differential Nonlinearity Error	-5	—	5	LSB	
DA05	EOFF	Offset Error	-3.5	—	21.5	LSB	Internal node at comparator input
DA06	EG	Gain Error	0	—	41	%	Internal node at comparator input
DA07	TSET	Settling Time	—	750	—	ns	Output with 2% of desired output voltage with a 5-95% or 95-5% step
DA08	VOUT	Voltage Output Range	0.165	—	3.135	V	VDD = 3.3V

Note 1: Parameters are for design guidance only and are not tested in manufacturing.

TABLE 24-47: DACx OUTPUT (DACOUT PIN) SPECIFICATIONS

Operating Conditions: 3.0V to 3.6V (unless otherwise stated)(1) Operating temperature -40°C ≤ TA ≤ +85°C for Industrial -40°C ≤ TA ≤ +125°C for Extended							
Param No.	**Symbol**	**Characteristic**	**Min.**	**Typ.**	**Max.**	**Units**	**Comments**
DA11	RLOAD	Resistive Output Load Impedance	10K	—	—	Ohm	
DA11a	CLOAD	Output Load Capacitance	—	—	30	pF	Including output pin capacitance
DA12	IOUT	Output Current Drive Strength	—	3	—	mA	Sink and source
DA13	INL	Integral Nonlinearity Error	-50	—	0	LSB	Includes INL of DACx module (DA03)
DA14	DNL	Differential Nonlinearity Error	-5	—	5	LSB	Includes DNL of DACx module (DA04)
DA30	EOFF	Offset Error	-150	—	0	LSB	Includes offset error of DACx module (DA05)
DA31	EG	Gain Error	-146	—	0	LSB	Includes gain error of DACx module (DA06)

Note 1: The DACx module is functional at VBORMIN < VDD < VDDMIN, but with degraded performance. Unless otherwise stated, module functionality is tested, but not characterized.

© 2017-2018 Microchip Technology Inc.

TABLE 24-48: PGAx MODULE SPECIFICATIONS

AC/DC CHARACTERISTICS				Standard Operating Conditions: 3.0V to 3.6V (unless otherwise stated)(1) Operating temperature -40°C ≤ TA ≤ +85°C for Industrial -40°C ≤ TA ≤ +125°C for Extended				
Param No.	**Symbol**	**Characteristic**		**Min.**	**Typ.**	**Max.**	**Units**	**Comments**
PA01	VIN	Input Voltage Range		AVSS – 0.3	—	AVDD + 0.3	V	
PA02	VCM	Common-Mode Input Voltage Range		AVSS	—	AVDD – 1.6	V	
PA03	VOS	Input Offset Voltage		-2	—	+2	mV	Gain = 32x
PA04	VOS	Input Offset Voltage Drift with Temperature		—	±15	—	µV/°C	
PA05	RIN+	Input Impedance of Positive Input		—	>1M || 7 pF	—	Ω|| pF	
PA06	RIN-	Input Impedance of Negative Input		—	10K || 7 pF	—	Ω|| pF	
PA07	GERR	Gain Error		-2	±0.5	+2	%	Gain = 4x, 8x,16x, 32x
PA08	LERR	Gain Nonlinearity Error		—	—	0.5	%	% of full scale, Gain = 16x
PA09	IDD	Current Consumption		—	2.0	—	mA	Module is enabled with a 2-volt P-P output voltage swing
PA10a	BW	Small Signal Bandwidth (-3 dB)	G = 4x	—	10	—	MHz	
PA10b			G = 8x	—	5	—	MHz	
PA10c			G = 16x	—	2.5	—	MHz	
PA10d			G = 32x	—	1.25	—	MHz	
PA11	OST	Output Settling Time to 1% of Final Value		—	0.4	—	µs	Gain = 16x, 100 mV input step change
PA12	SR	Output Slew Rate		—	40	—	V/µs	Gain = 16x
PA13	TGSEL	Gain Selection Time		—	1	—	µs	
PA14	TON	Module Turn-on/Setting Time		—	—	10	µs	

Note 1: The PGAx module is functional at VBORMIN < VDD < VDDMIN, but with degraded performance. Unless otherwise stated, module functionality is tested, but not characterized.

TABLE 24-49: CONSTANT-CURRENT SOURCE SPECIFICATIONS

Operating Conditions: 3.0V to 3.6V (unless otherwise stated)(1) Operating temperature -40°C ≤ TA ≤ +85°C for Industrial -40°C ≤ TA ≤ +125°C for Extended							
Param No.	**Symbol**	**Characteristic**	**Min.**	**Typ.**	**Max.**	**Units**	**Conditions**
CC02	IREG	Current Regulation	—	±3	—	%	
CC03	IOUT	Current Output at Terminal	—	10	—	µA	ISRCx pin
			—	50	—	µA	IBIASx pin

Note 1: The constant-current source module is functional at VBORMIN < VDD < VDDMIN, but with degraded performance. Unless otherwise stated, module functionality is tested, but not characterized.

NOTES:

© 2017-2018 Microchip Technology Inc.

25.0 PACKAGING INFORMATION

25.1 Package Marking Information

28-Lead SSOP (5.30 mm)

Example

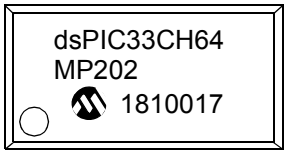

28-Lead UQFN (6x6 mm)

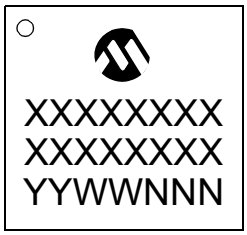

Example

36-Lead UQFN (5x5 mm)

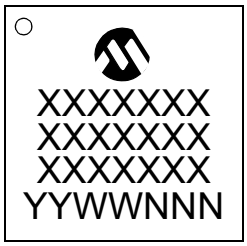

Example

Legend:	XX...X	Customer-specific information
	Y	Year code (last digit of calendar year)
	YY	Year code (last 2 digits of calendar year)
	WW	Week code (week of January 1 is week ‘01’)
	NNN	Alphanumeric traceability code

Note: In the event the full Microchip part number cannot be marked on one line, it will be carried over to the next line, thus limiting the number of available characters for customer-specific information.

25.1 Package Marking Information (Continued)

48-Lead TQFP (7x7 mm)

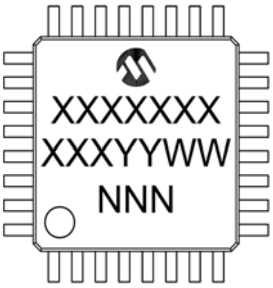

Example

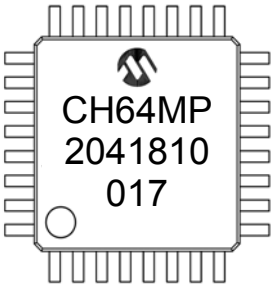

48-Lead UQFN (6x6 mm)

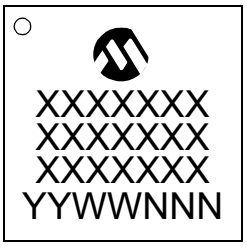

Example

64-Lead TQFP (10x10x1 mm)

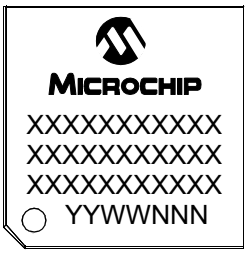

Example

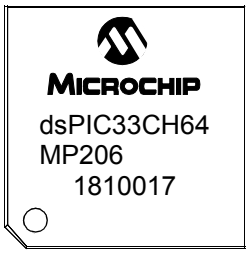

64-Lead QFN (9x9x0.9 mm)

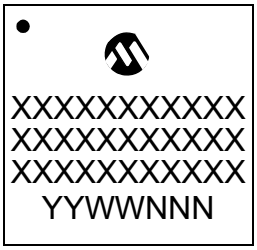

Example

80-Lead TQFP (12x12x1 mm)

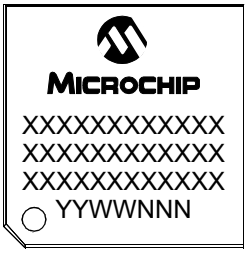

Example

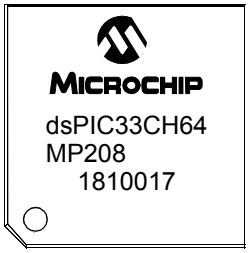

© 2017-2018 Microchip Technology Inc.

25.2 Package Details

28-Lead Plastic Shrink Small Outline (SS) – 5.30 mm Body [SSOP]

Note: For the most current package drawings, please see the Microchip Packaging Specification located at http://www.microchip.com/packaging

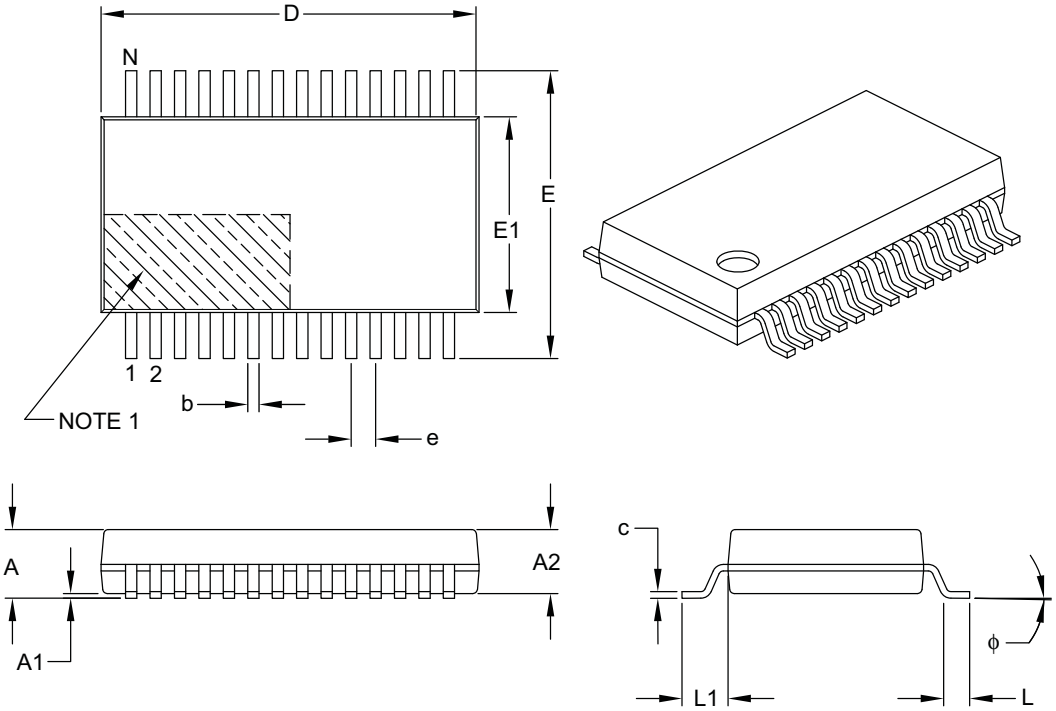

Units		MILLIMETERS		
Dimension Limits		MIN	NOM	MAX
Number of Pins	N	28		
Pitch	e	0.65 BSC		
Overall Height	A	–	–	2.00
Molded Package Thickness	A2	1.65	1.75	1.85
Standoff	A1	0.05	–	–
Overall Width	E	7.40	7.80	8.20
Molded Package Width	E1	5.00	5.30	5.60
Overall Length	D	9.90	10.20	10.50
Foot Length	L	0.55	0.75	0.95
Footprint	L1	1.25 REF		
Lead Thickness	c	0.09	–	0.25
Foot Angle	ϕ	0°	4°	8°
Lead Width	b	0.22	–	0.38

Notes:

1. Pin 1 visual index feature may vary, but must be located within the hatched area.
2. Dimensions D and E1 do not include mold flash or protrusions. Mold flash or protrusions shall not exceed 0.20 mm per side.
3. Dimensioning and tolerancing per ASME Y14.5M.

   BSC: Basic Dimension. Theoretically exact value shown without tolerances.
   REF: Reference Dimension, usually without tolerance, for information purposes only.

Microchip Technology Drawing C04-073B

28-Lead Plastic Shrink Small Outline (SS) - 5.30 mm Body [SSOP]

Note: For the most current package drawings, please see the Microchip Packaging Specification located at http://www.microchip.com/packaging

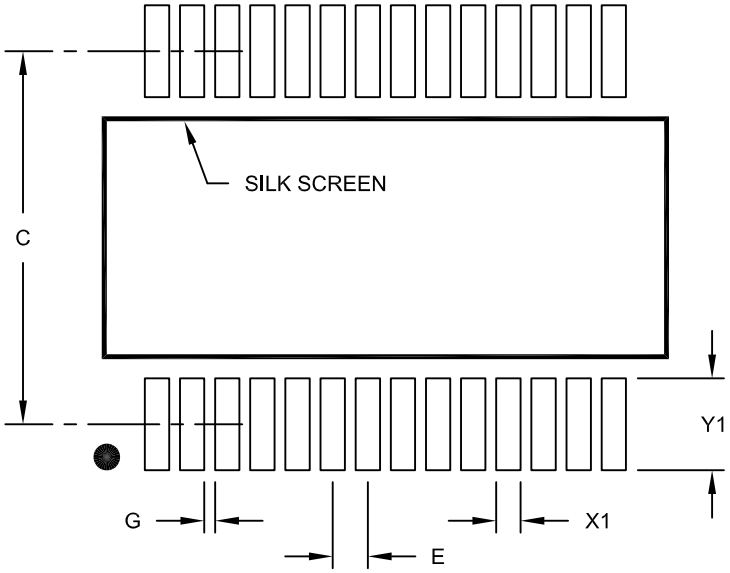

RECOMMENDED LAND PATTERN

Units		MILLIMETERS		
Dimension Limits		MIN	NOM	MAX
Contact Pitch	E	0.65 BSC		
Contact Pad Spacing	C		7.20	
Contact Pad Width (X28)	X1			0.45
Contact Pad Length (X28)	Y1			1.75
Distance Between Pads	G	0.20		

Notes:

1. Dimensioning and tolerancing per ASME Y14.5M
   BSC: Basic Dimension. Theoretically exact value shown without tolerances.

Microchip Technology Drawing No. C04-2073A

© 2017-2018 Microchip Technology Inc.

28-Lead Ultra Thin Plastic Quad Flat, No Lead Package (2N) - 6x6x0.55 mm Body [UQFN] With 4.65x4.65 mm Exposed Pad and Corner Anchors

Note:	For the most current package drawings, please see the Microchip Packaging Specification located at http://www.microchip.com/packaging

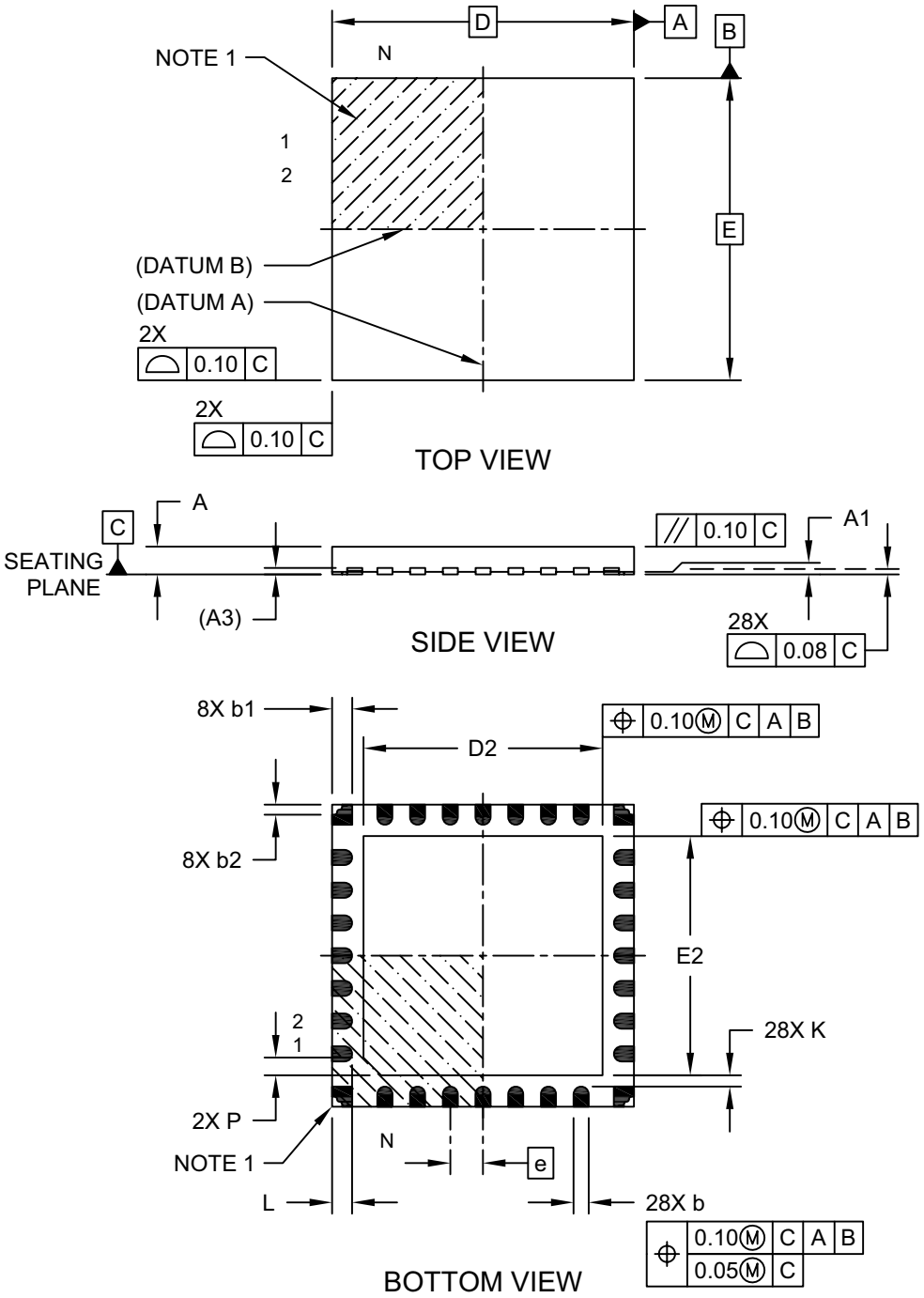

Microchip Technology Drawing C04-385B Sheet 1 of 2

28-Lead Ultra Thin Plastic Quad Flat, No Lead Package (2N) - 6x6x0.55 mm Body [UQFN] With 4.65x4.65 mm Exposed Pad and Corner Anchors

Note: For the most current package drawings, please see the Microchip Packaging Specification located at http://www.microchip.com/packaging

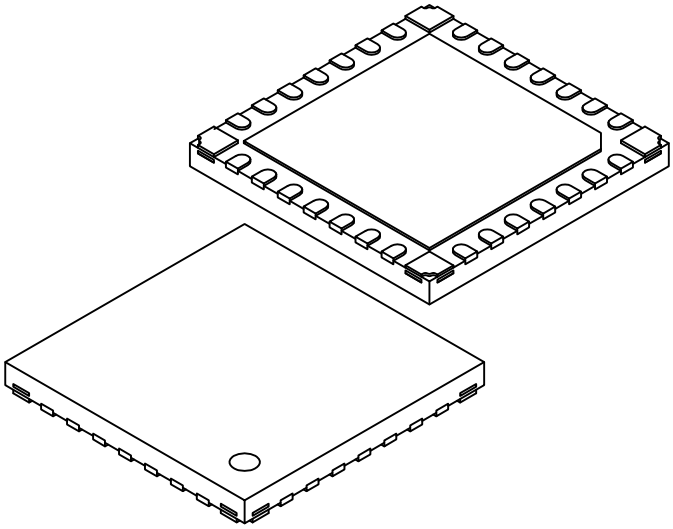

Units		MILLIMETERS		
Dimension Limits		MIN	NOM	MAX
Number of Terminals	N	28		
Pitch	e	0.65 BSC		
Overall Height	A	0.45	0.50	0.55
Standoff	A1	0.00	0.02	0.05
Terminal Thickness	A3	0.127 REF		
Overall Width	E	6.00 BSC		
Exposed Pad Width	E2	4.55	4.65	4.75
Overall Length	D	6.00 BSC		
Exposed Pad Length	D2	4.55	4.65	4.75
Exposed Pad Corner Chamfer	P	-	0.35	-
Terminal Width	b	0.25	0.30	0.35
Corner Anchor Pad	b1	0.35	0.40	0.43
Corner Pad, Metal Free Zone	b2	0.15	0.20	0.25
Terminal Length	L	0.30	0.40	0.50
Terminal-to-Exposed-Pad	K	0.20	-	-

Notes:

1. Pin 1 visual index feature may vary, but must be located within the hatched area.
2. Package is saw singulated
3. Dimensioning and tolerancing per ASME Y14.5M

   BSC: Basic Dimension. Theoretically exact value shown without tolerances.

   REF: Reference Dimension, usually without tolerance, for information purposes only.

Microchip Technology Drawing C04-385B Sheet 2 of 2

© 2017-2018 Microchip Technology Inc.

28-Lead Ultra Thin Plastic Quad Flat, No Lead Package (2N) - 6x6x0.55 mm Body [UQFN] With 4.65x4.65 mm Exposed Pad and Corner Anchors

Note: For the most current package drawings, please see the Microchip Packaging Specification located at http://www.microchip.com/packaging

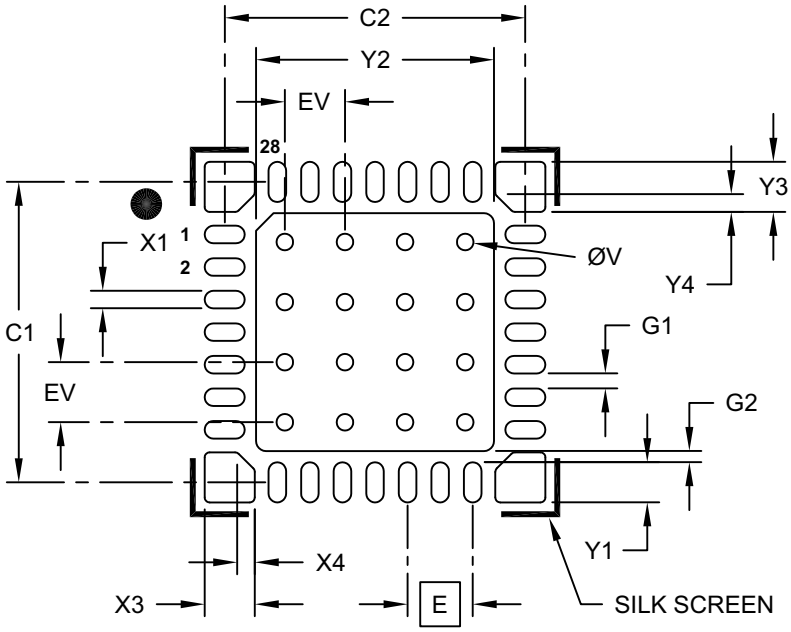

RECOMMENDED LAND PATTERN

Units		MILLIMETERS		
Dimension Limits		MIN	NOM	MAX
Contact Pitch	E		0.65 BSC	
Optional Center Pad Width	X2			4.75
Optional Center Pad Length	Y2			4.75
Contact Pad Spacing	C1		6.00	
Contact Pad Spacing	C2		6.00	
Contact Pad Width (X28)	X1			0.35
Contact Pad Length (X28)	Y1			0.80
Corner Anchor (X4)	X3			1.00
Corner Anchor (X4)	Y3			1.00
Corner Anchor Chamfer (X4)	X4			0.35
Corner Anchor Chamfer (X4)	Y4			0.35
Contact Pad to Pad (X28)	G1	0.20		
Contact Pad to Center Pad (X28)	G2	0.20		
Thermal Via Diameter	V		0.33	
Thermal Via Pitch	EV		1.20	

Notes:

1. Dimensioning and tolerancing per ASME Y14.5M
   BSC: Basic Dimension. Theoretically exact value shown without tolerances.
2. For best soldering results, thermal vias, if used, should be filled or tented to avoid solder loss during reflow process

Microchip Technology Drawing C04-2385B

36-Lead Ultra Thin Plastic Quad Flat, No Lead Package (M5) - 5x5 mm Body [UQFN] With Corner Anchors

Note: For the most current package drawings, please see the Microchip Packaging Specification located at http://www.microchip.com/packaging

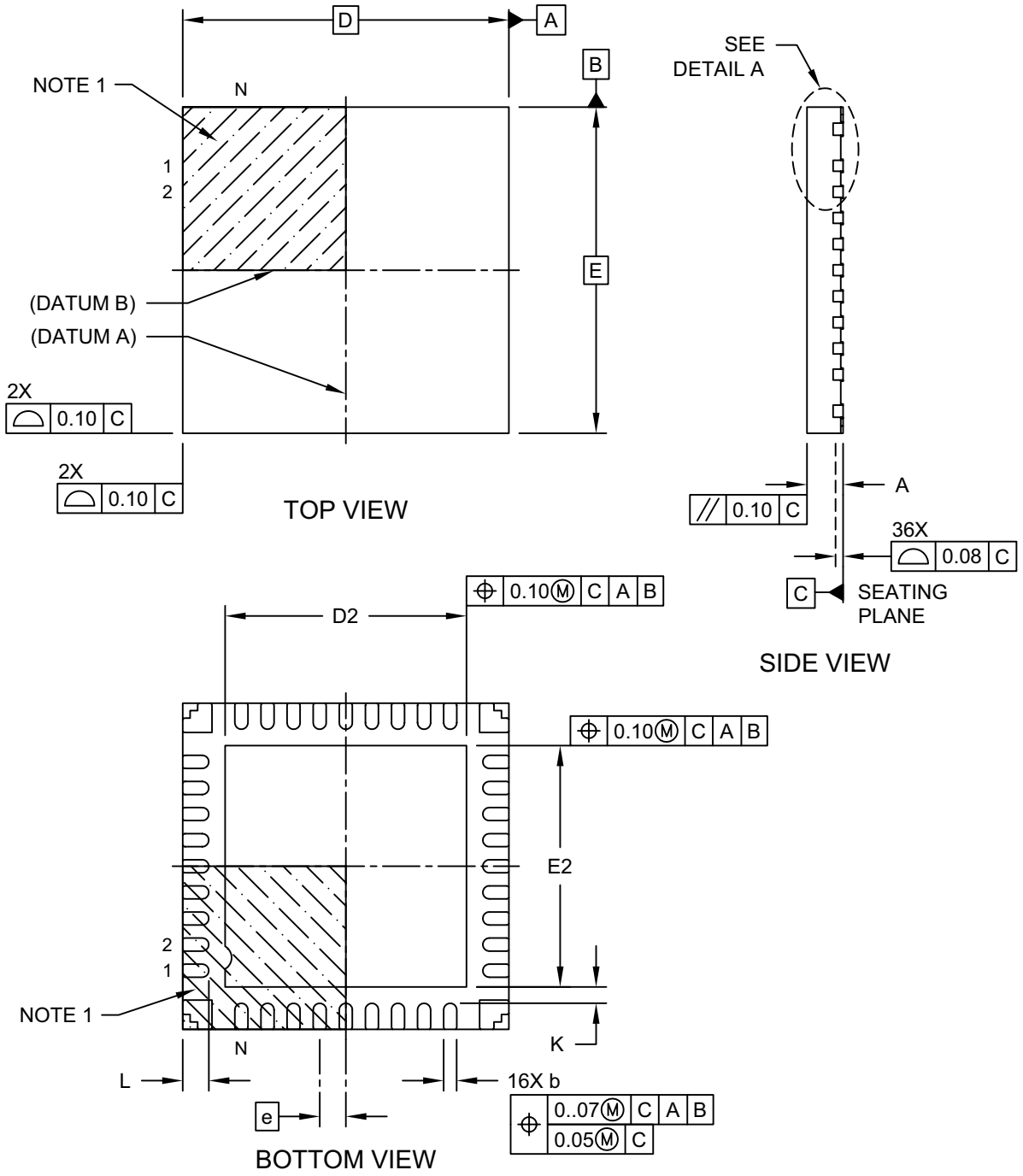

Microchip Technology Drawing C04-436A–M5 Sheet 1 of 2

© 2017-2018 Microchip Technology Inc.

36-Lead Ultra Thin Plastic Quad Flat, No Lead Package (M5) - 5x5 mm Body [UQFN] With Corner Anchors

Note: For the most current package drawings, please see the Microchip Packaging Specification located at http://www.microchip.com/packaging

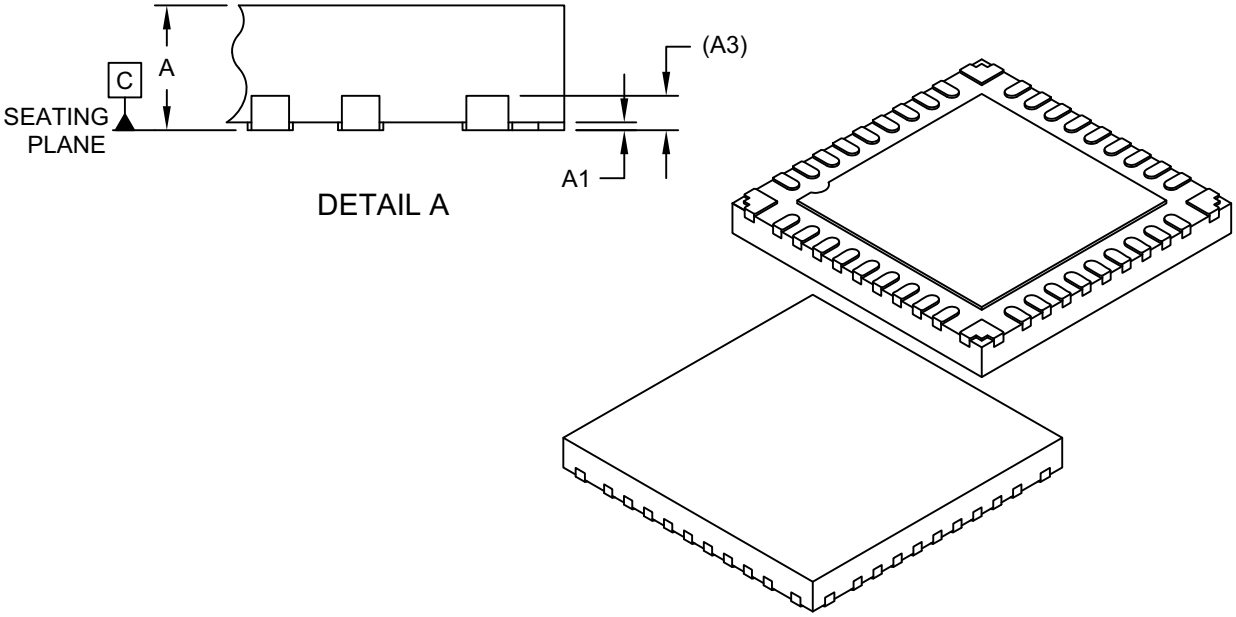

Units		MILLIMETERS		
Dimension Limits		MIN	NOM	MAX
Number of Terminals	N	36		
Pitch	e	0.40 BSC		
Overall Height	A	0.50	0.55	0.60
Standoff	A1	0.00	0.02	0.05
Terminal Thickness	A3	0.152 REF		
Overall Length	D	5.00 BSC		
Exposed Pad Length	D2	3.60	3.70	3.80
Overall Width	E	5.00 BSC		
Exposed Pad Width	E2	3.60	3.70	3.80
Terminal Width	b	0.15	0.20	0.25
Terminal Length	L	0.30	0.40	0.50
Terminal-to-Exposed-Pad	K	0.25 REF		

Notes:

1. Pin 1 visual index feature may vary, but must be located within the hatched area.
2. Package is saw singulated
3. Dimensioning and tolerancing per ASME Y14.5M

   BSC: Basic Dimension. Theoretically exact value shown without tolerances.

   REF: Reference Dimension, usually without tolerance, for information purposes only.

Microchip Technology Drawing C04-436A–M5 Sheet 2 of 2

36-Lead Ultra Thin Plastic Quad Flat, No Lead Package (M5) - 5x5 mm Body [UQFN] With Corner Anchors

Note: For the most current package drawings, please see the Microchip Packaging Specification located at http://www.microchip.com/packaging

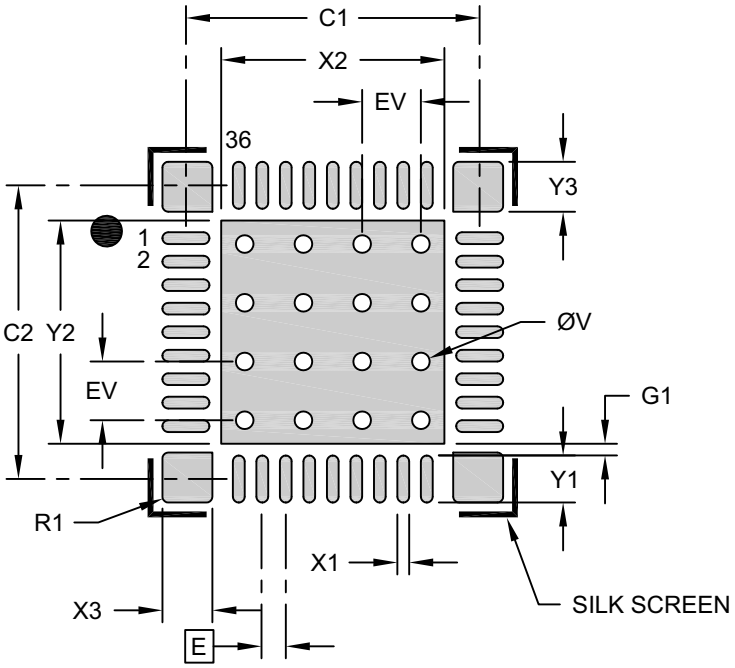

RECOMMENDED LAND PATTERN

Units		MILLIMETERS		
Dimension Limits		MIN	NOM	MAX
Contact Pitch	E		0.40 BSC	
Optional Center Pad Width	X2			3.80
Optional Center Pad Length	Y2			3.80
Contact Pad Spacing	C1		5.00	
Contact Pad Spacing	C2		5.00	
Contact Pad Width (X36)	X1			0.20
Contact Pad Length (X36)	Y1			0.80
Corner Pad Width (X4)	X3			0.20
Corner Pad Length (X36)	Y3			0.85
Corner Pad Radius	R1		0.10	
Contact Pad to Center Pad (X36)	G1	0.20		
Thermal Via Diameter	V		0.30	
Thermal Via Pitch	EV		1.00	

Notes:

1. Dimensioning and tolerancing per ASME Y14.5M
   BSC: Basic Dimension. Theoretically exact value shown without tolerances.
2. For best soldering results, thermal vias, if used, should be filled or tented to avoid solder loss during reflow process

Microchip Technology Drawing C04-2436A–M5

© 2017-2018 Microchip Technology Inc.

48-Lead Thin Quad Flatpack (PT) - 7x7x1.0 mm Body [TQFP]

Note: For the most current package drawings, please see the Microchip Packaging Specification located at http://www.microchip.com/packaging

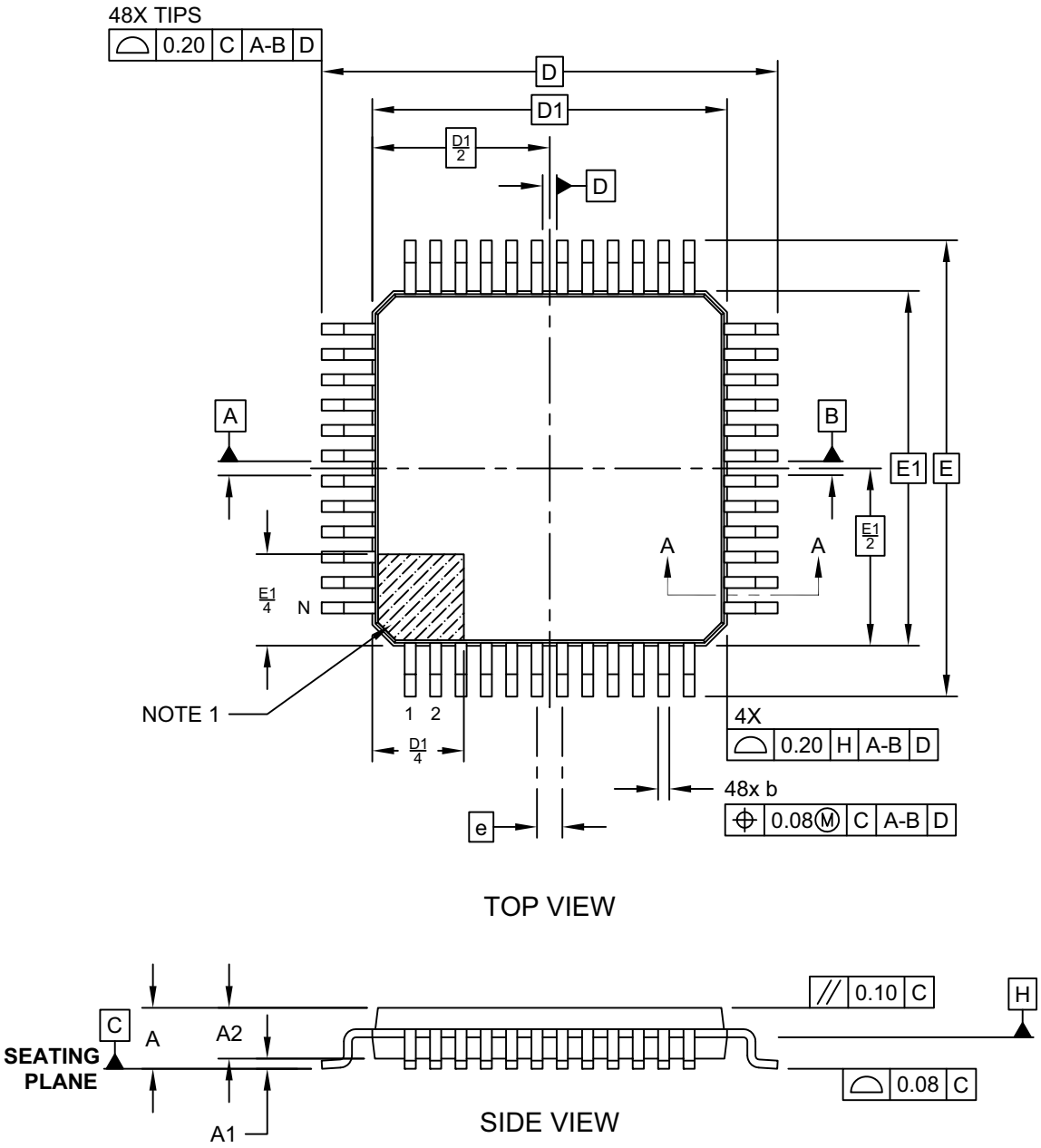

Microchip Technology Drawing C04-300-PT Rev A Sheet 1 of 2

48-Lead Thin Quad Flatpack (PT) - 7x7x1.0 mm Body [TQFP]

Note: For the most current package drawings, please see the Microchip Packaging Specification located at http://www.microchip.com/packaging

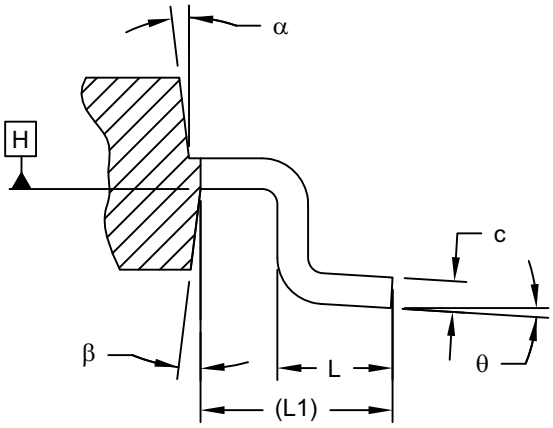

SECTION A-A

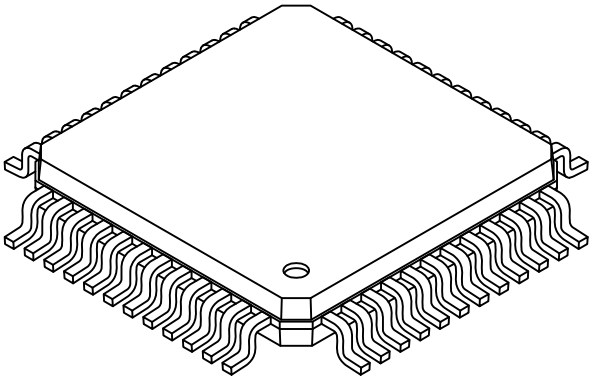

Units		MILLIMETERS		
Dimension Limits		MIN	NOM	MAX
Number of Leads	N	48		
Lead Pitch	e	0.50 BSC		
Overall Height	A	-	-	1.20
Standoff	A1	0.05	-	0.15
Molded Package Thickness	A2	0.95	1.00	1.05
Foot Length	L	0.45	0.60	0.75
Footprint	L1	1.00 REF		
Foot Angle	ϕ	0°	3.5°	7°
Overall Width	E	9.00 BSC		
Overall Length	D	9.00 BSC		
Molded Package Width	E1	7.00 BSC		
Molded Package Length	D1	7.00 BSC		
Lead Thickness	c	0.09	-	0.16
Lead Width	b	0.17	0.22	0.27
Mold Draft Angle Top	α	11°	12°	13°
Mold Draft Angle Bottom	β	11°	12°	13°

Notes:

1. Pin 1 visual index feature may vary, but must be located within the hatched area.
2. Chamfers at corners are optional; size may vary.
3. Dimensions D1 and E1 do not include mold flash or protrusions. Mold flash or protrusions shall not exceed 0.25mm per side.
4. Dimensioning and tolerancing per ASME Y14.5M
   BSC: Basic Dimension. Theoretically exact value shown without tolerances.
   REF: Reference Dimension, usually without tolerance, for information purposes only.
5. Datums A-B and D to be determined at center line between leads where leads exit plastic body at datum plane H

Microchip Technology Drawing C04-300-PT Rev A Sheet 2 of 2

© 2017-2018 Microchip Technology Inc.

48-Lead Thin Quad Flatpack (PT) - 7x7x1.0 mm Body [TQFP]

Note: For the most current package drawings, please see the Microchip Packaging Specification located at http://www.microchip.com/packaging

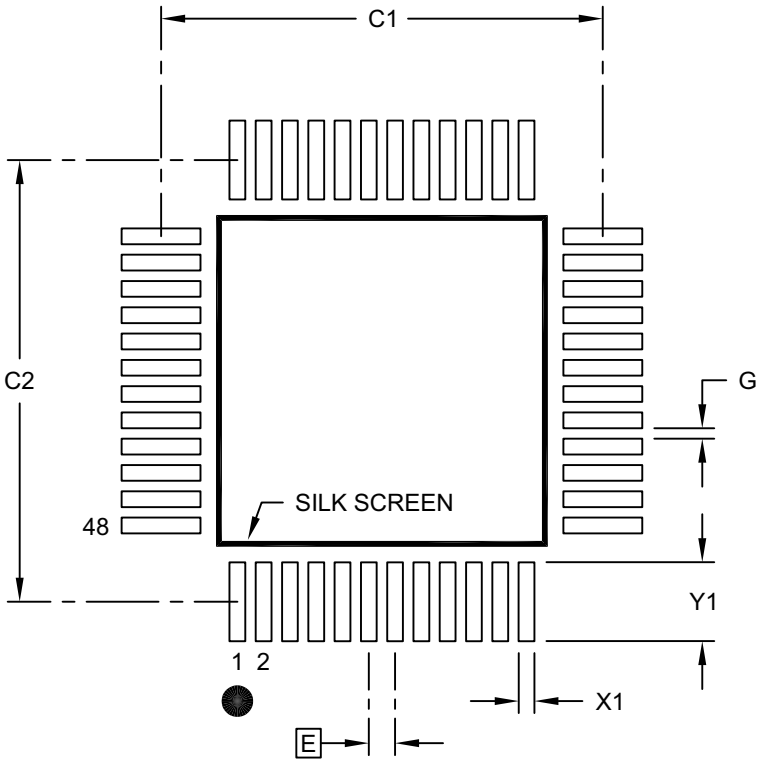

RECOMMENDED LAND PATTERN

Units		MILLIMETERS		
Dimension Limits		MIN	NOM	MAX
Contact Pitch	E		0.50 BSC	
Contact Pad Spacing	C1		8.40	
Contact Pad Spacing	C2		8.40	
Contact Pad Width (X48)	X1			0.30
Contact Pad Length (X48)	Y1			1.50
Distance Between Pads	G	0.20		

Notes:

1. Dimensioning and tolerancing per ASME Y14.5M
   BSC: Basic Dimension. Theoretically exact value shown without tolerances.
2. For best soldering results, thermal vias, if used, should be filled or tented to avoid solder loss during reflow process

Microchip Technology Drawing C04-2300-PT Rev A

48-Lead Ultra Thin Plastic Quad Flat, No Lead Package (M4) - 6x6 mm Body [UQFN] With Corner Anchors and 4.6x4.6 mm Exposed Pad

Note: For the most current package drawings, please see the Microchip Packaging Specification located at http://www.microchip.com/packaging

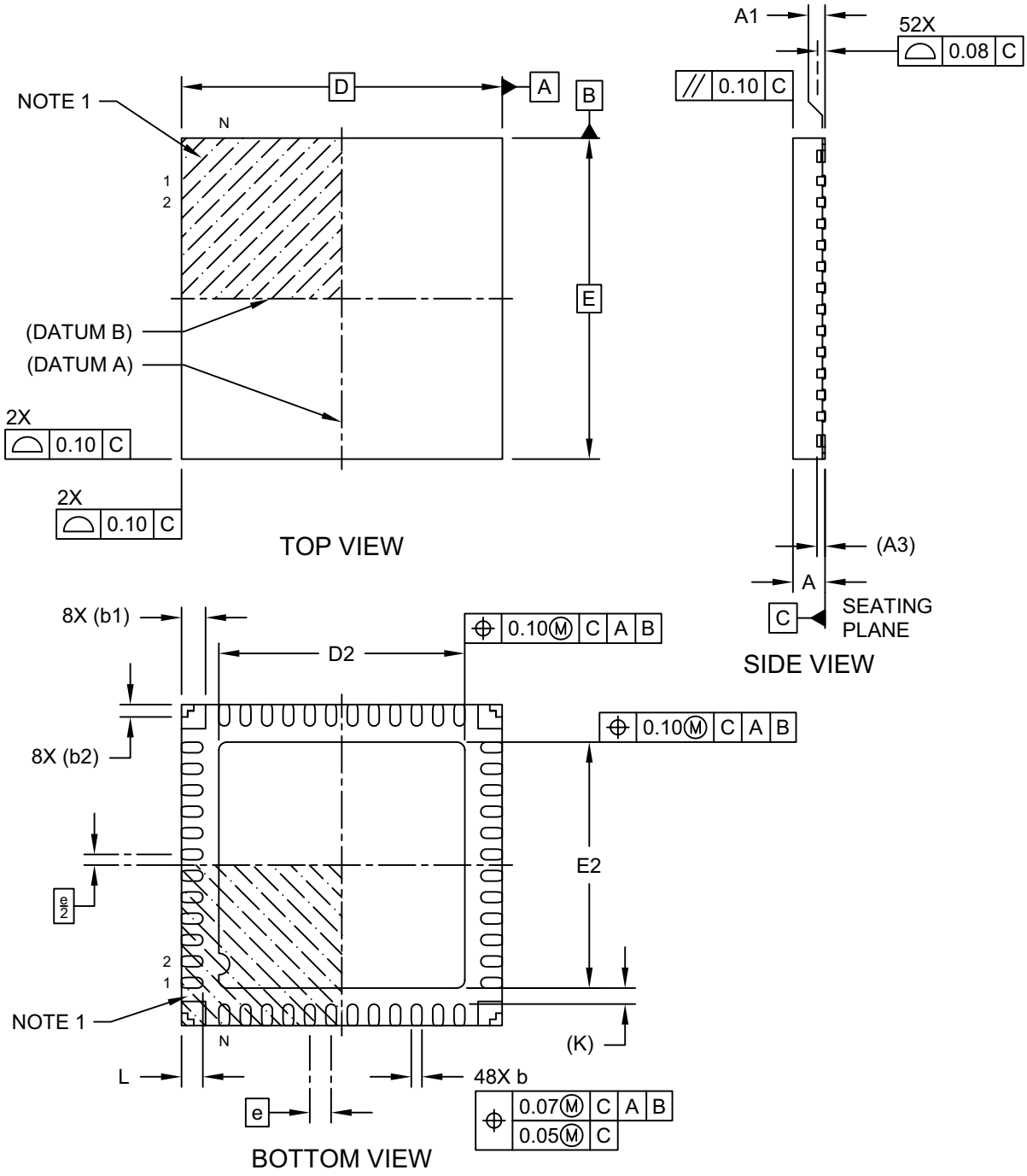

Microchip Technology Drawing C04-442A-M4 Sheet 1 of 2

© 2017-2018 Microchip Technology Inc.

48-Lead Ultra Thin Plastic Quad Flat, No Lead Package (M4) - 6x6 mm Body [UQFN] With Corner Anchors and 4.6x4.6 mm Exposed Pad

Note: For the most current package drawings, please see the Microchip Packaging Specification located at http://www.microchip.com/packaging

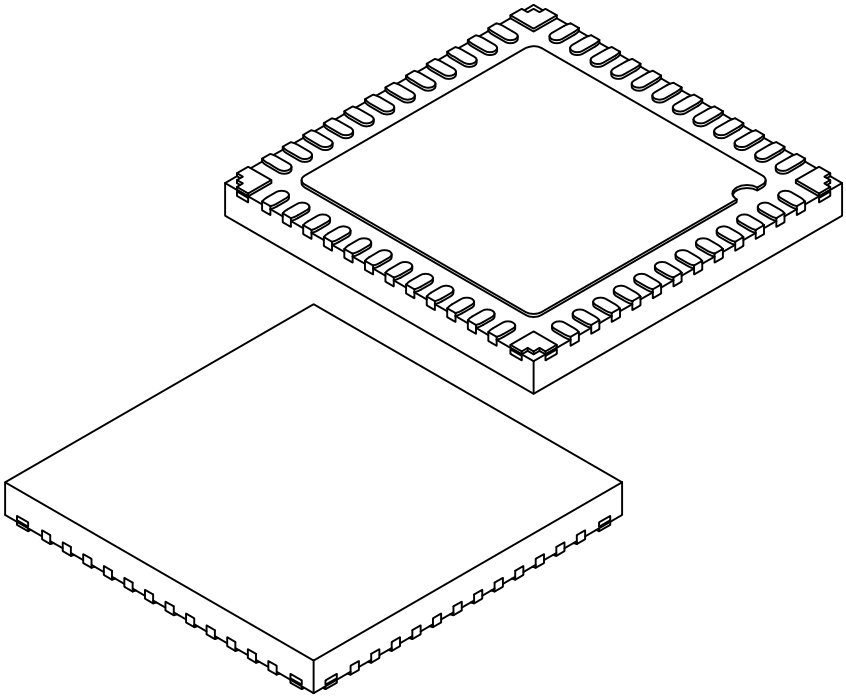

Units		MILLIMETERS		
Dimension Limits		MIN	NOM	MAX
Number of Terminals	N	48		
Pitch	e	0.40 BSC		
Overall Height	A	0.50	0.55	0.60
Standoff	A1	0.00	0.02	0.05
Terminal Thickness	A3	0.15 REF		
Overall Length	D	6.00 BSC		
Exposed Pad Length	D2	4.50	4.60	4.70
Overall Width	E	6.00 BSC		
Exposed Pad Width	E2	4.50	4.60	4.70
Terminal Width	b	0.15	0.20	0.25
Corner Anchor Pad	b1	0.45 REF		
Corner Anchor Pad, Metal-free Zone	b2	0.23 REF		
Terminal Length	L	0.35	0.40	0.45
Terminal-to-Exposed-Pad	K	0.30 REF		

Notes:

1. Pin 1 visual index feature may vary, but must be located within the hatched area.
2. Package is saw singulated
3. Dimensioning and tolerancing per ASME Y14.5M

   BSC: Basic Dimension. Theoretically exact value shown without tolerances.

   REF: Reference Dimension, usually without tolerance, for information purposes only.

Microchip Technology Drawing C04-442A-M4 Sheet 2 of 2

48-Lead Ultra Thin Plastic Quad Flat, No Lead Package (M4) - 6x6 mm Body [UQFN] With Corner Anchors and 4.6x4.6 mm Exposed Pad

Note: For the most current package drawings, please see the Microchip Packaging Specification located at http://www.microchip.com/packaging

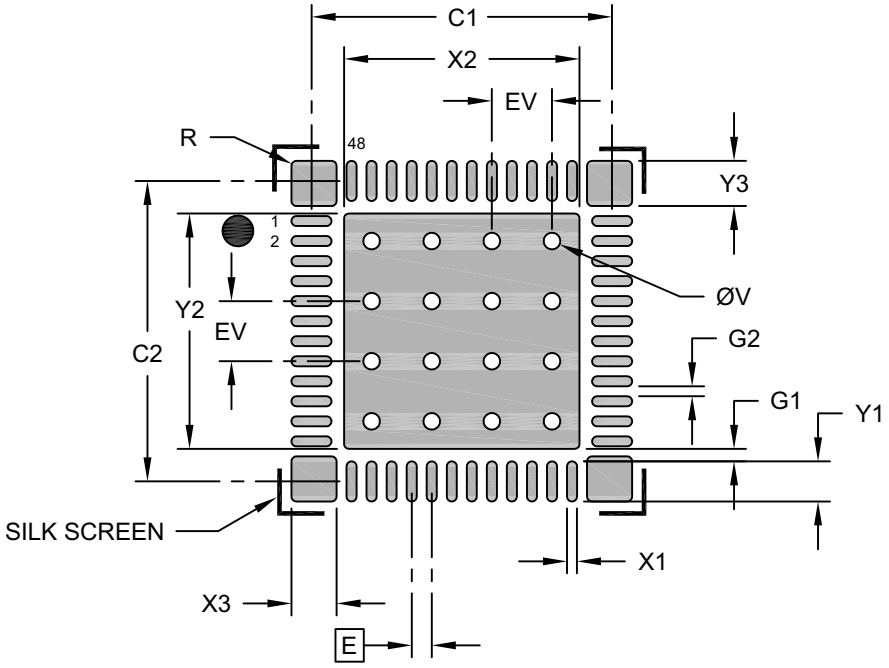

RECOMMENDED LAND PATTERN

Units		MILLIMETERS		
Dimension Limits		MIN	NOM	MAX
Contact Pitch	E		0.40 BSC	
Center Pad Width	X2			4.70
Center Pad Length	Y2			4.70
Contact Pad Spacing	C1		6.00	
Contact Pad Spacing	C2		6.00	
Contact Pad Width (X48)	X1			0.20
Contact Pad Length (X48)	Y1			0.80
Corner Anchor Pad Width (X4)	X3			0.90
Corner Anchor Pad Length (X4)	Y3			0.90
Pad Corner Radius (X 20)	R			0.10
Contact Pad to Center Pad (X48)	G1	0.25		
Contact Pad to Contact Pad	G2	0.20		
Thermal Via Diameter	V		0.33	
Thermal Via Pitch	EV		1.20	

Notes:

1. Dimensioning and tolerancing per ASME Y14.5M
   BSC: Basic Dimension. Theoretically exact value shown without tolerances.
2. For best soldering results, thermal vias, if used, should be filled or tented to avoid solder loss during reflow process

Microchip Technology Drawing C04-2442A-M4

© 2017-2018 Microchip Technology Inc.

64-Lead Plastic Thin Quad Flatpack (PT)-10x10x1 mm Body, 2.00 mm Footprint [TQFP]

Note: For the most current package drawings, please see the Microchip Packaging Specification located at http://www.microchip.com/packaging

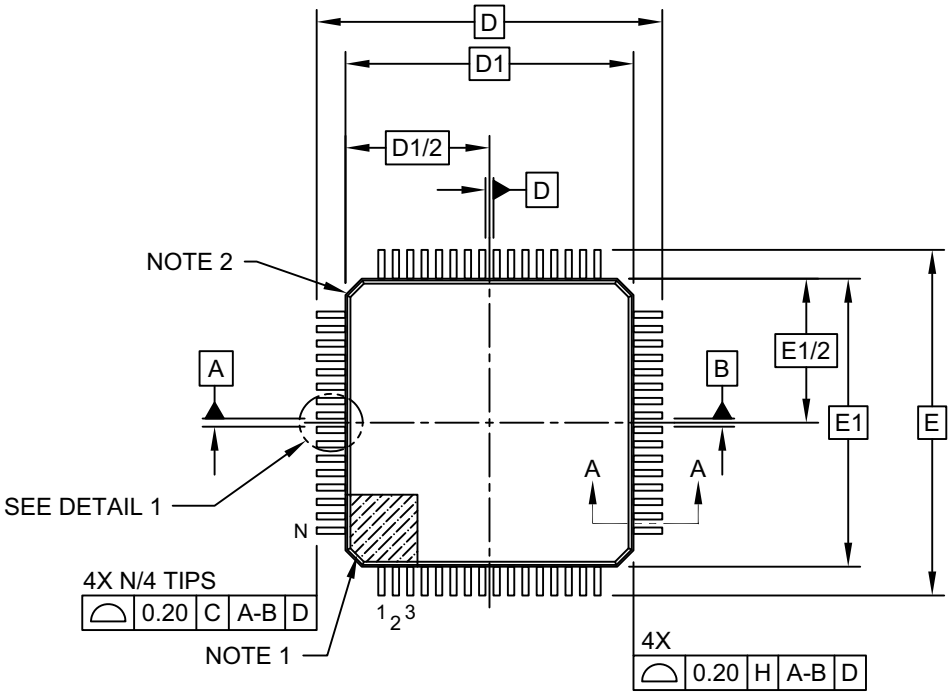

TOP VIEW

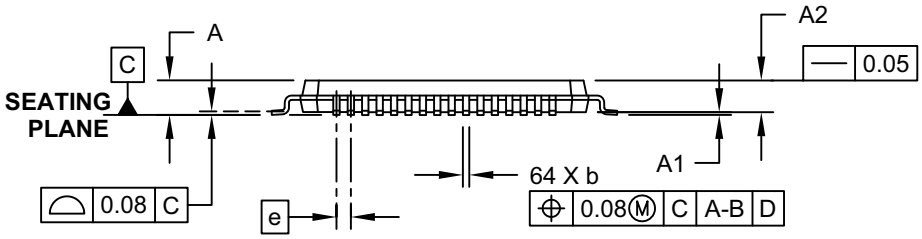

SIDE VIEW

Microchip Technology Drawing C04-085C Sheet 1 of 2

64-Lead Plastic Thin Quad Flatpack (PT)-10x10x1 mm Body, 2.00 mm Footprint [TQFP]

Note: For the most current package drawings, please see the Microchip Packaging Specification located at http://www.microchip.com/packaging

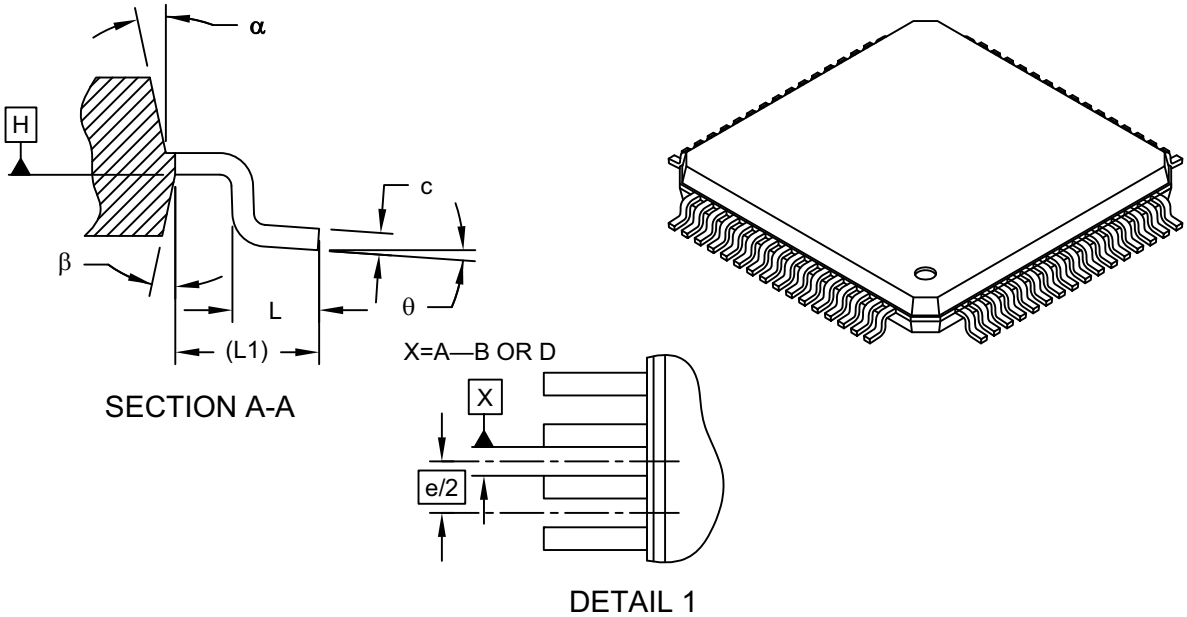

Units		MILLIMETERS		
Dimension Limits		MIN	NOM	MAX
Number of Leads	N	64		
Lead Pitch	e	0.50 BSC		
Overall Height	A	-	-	1.20
Molded Package Thickness	A2	0.95	1.00	1.05
Standoff	A1	0.05	-	0.15
Foot Length	L	0.45	0.60	0.75
Footprint	L1	1.00 REF		
Foot Angle	ϕ	0°	3.5°	7°
Overall Width	E	12.00 BSC		
Overall Length	D	12.00 BSC		
Molded Package Width	E1	10.00 BSC		
Molded Package Length	D1	10.00 BSC		
Lead Thickness	c	0.09	-	0.20
Lead Width	b	0.17	0.22	0.27
Mold Draft Angle Top	α	11°	12°	13°
Mold Draft Angle Bottom	β	11°	12°	13°

Notes:

1. Pin 1 visual index feature may vary, but must be located within the hatched area.
2. Chamfers at corners are optional; size may vary.
3. Dimensions D1 and E1 do not include mold flash or protrusions. Mold flash or protrusions shall not exceed 0.25mm per side.
4. Dimensioning and tolerancing per ASME Y14.5M

   BSC: Basic Dimension. Theoretically exact value shown without tolerances.

   REF: Reference Dimension, usually without tolerance, for information purposes only.

Microchip Technology Drawing C04-085C Sheet 2 of 2

© 2017-2018 Microchip Technology Inc.

64-Lead Plastic Thin Quad Flatpack (PT)-10x10x1 mm Body, 2.00 mm Footprint [TQFP]

Note: For the most current package drawings, please see the Microchip Packaging Specification located at http://www.microchip.com/packaging

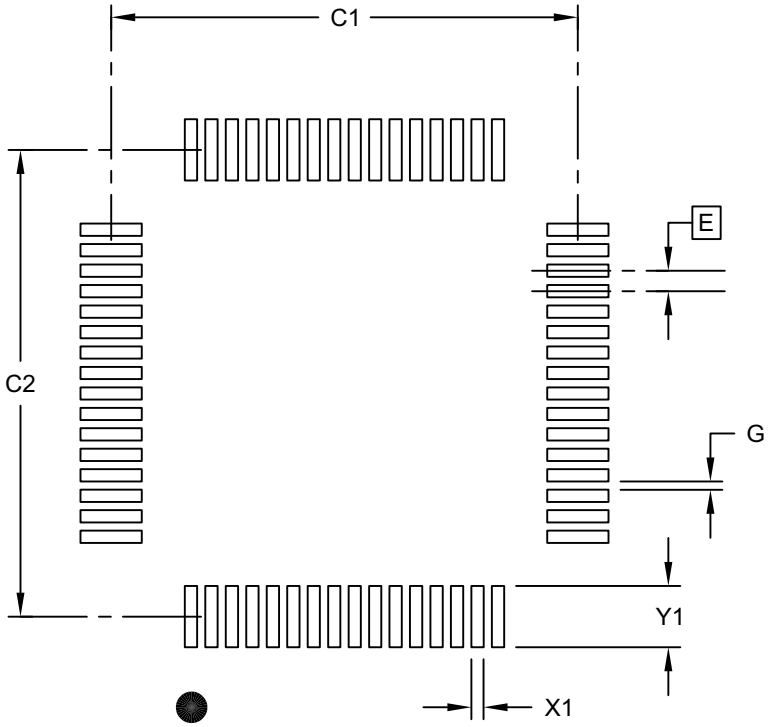

RECOMMENDED LAND PATTERN

Units		MILLIMETERS		
Dimension Limits		MIN	NOM	MAX
Contact Pitch	E		0.50 BSC	
Contact Pad Spacing	C1		11.40	
Contact Pad Spacing	C2		11.40	
Contact Pad Width (X28)	X1			0.30
Contact Pad Length (X28)	Y1			1.50
Distance Between Pads	G	0.20		

Notes:

1. Dimensioning and tolerancing per ASME Y14.5M

   BSC: Basic Dimension. Theoretically exact value shown without tolerances.

Microchip Technology Drawing C04-2085B Sheet 1 of 1

64-Lead Plastic Quad Flat, No Lead Package (MR) – 9x9x0.9 mm Body with 5.40 x 5.40 Exposed Pad [QFN]

Note: For the most current package drawings, please see the Microchip Packaging Specification located at http://www.microchip.com/packaging

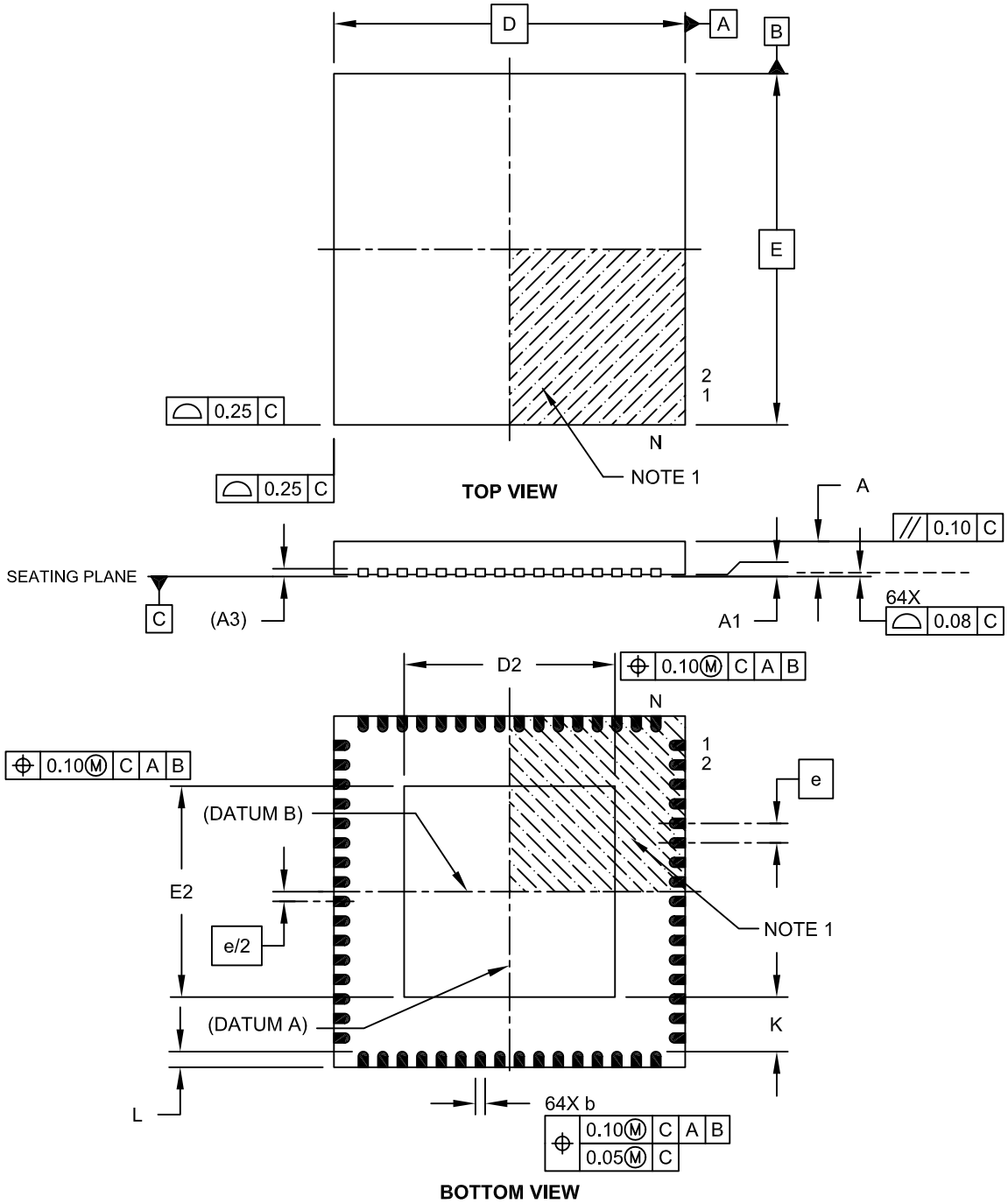

Microchip Technology Drawing C04-154A Sheet 1 of 2

© 2017-2018 Microchip Technology Inc.

64-Lead Plastic Quad Flat, No Lead Package (MR) – 9x9x0.9 mm Body with 5.40 x 5.40 Exposed Pad [QFN]

Note: For the most current package drawings, please see the Microchip Packaging Specification located at http://www.microchip.com/packaging

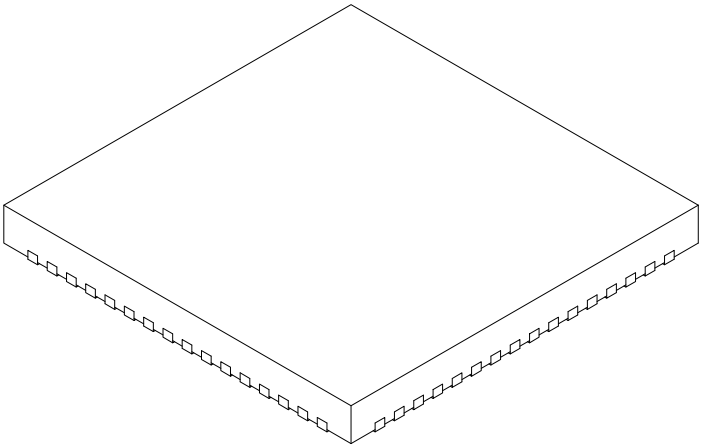

Units		MILLIMETERS		
Dimension Limits		MIN	NOM	MAX
Number of Pins	N	64		
Pitch	e	0.50 BSC		
Overall Height	A	0.80	0.90	1.00
Standoff	A1	0.00	0.02	0.05
Contact Thickness	A3	0.20 REF		
Overall Width	E	9.00 BSC		
Exposed Pad Width	E2	5.30	5.40	5.50
Overall Length	D	9.00 BSC		
Exposed Pad Length	D2	5.30	5.40	5.50
Contact Width	b	0.20	0.25	0.30
Contact Length	L	0.30	0.40	0.50
Contact-to-Exposed Pad	K	0.20	-	-

Notes:

1. Pin 1 visual index feature may vary, but must be located within the hatched area.
2. Package is saw singulated.
3. Dimensioning and tolerancing per ASME Y14.5M.
   BSC: Basic Dimension. Theoretically exact value shown without tolerances.
   REF: Reference Dimension, usually without tolerance, for information purposes only.

Microchip Technology Drawing C04-154A Sheet 2 of 2

64-Lead Plastic Quad Flat, No Lead Package (MR) – 9x9x0.9 mm Body [QFN]
With 0.40 mm Contact Length and 5.40x5.40mm Exposed Pad

Note: For the most current package drawings, please see the Microchip Packaging Specification located at http://www.microchip.com/packaging

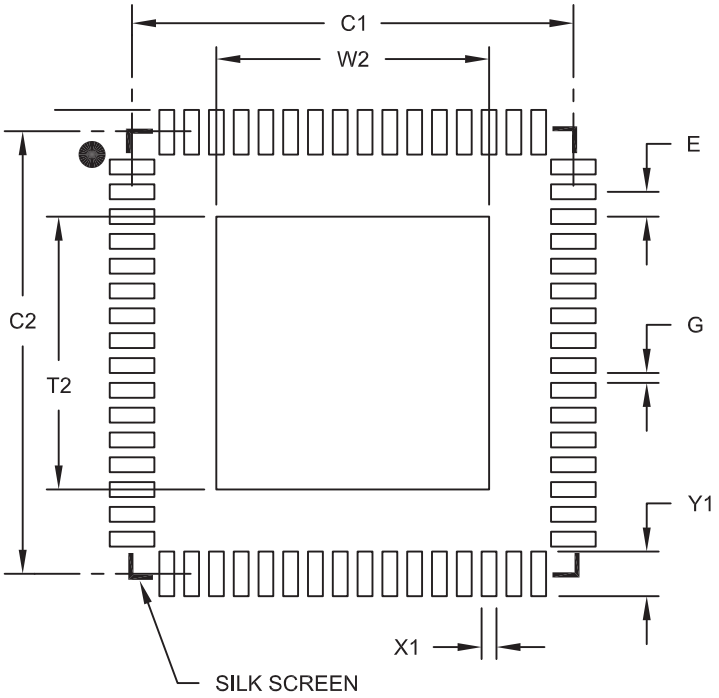

RECOMMENDED LAND PATTERN

Units		MILLIMETERS		
Dimension Limits		MIN	NOM	MAX
Contact Pitch	E		0.50 BSC	
Optional Center Pad Width	W2			5.50
Optional Center Pad Length	T2			5.50
Contact Pad Spacing	C1		8.90	
Contact Pad Spacing	C2		8.90	
Contact Pad Width (X64)	X1			0.30
Contact Pad Length (X64)	Y1			0.85
Distance Between Pads	G	0.20		

Notes:

1. Dimensioning and tolerancing per ASME Y14.5M
   BSC: Basic Dimension. Theoretically exact value shown without tolerances.

Microchip Technology Drawing No. C04-2154A

© 2017-2018 Microchip Technology Inc.

80-Lead Plastic Thin Quad Flatpack (PT) – 12x12x1 mm Body, 2.00 mm [TQFP]

Note: For the most current package drawings, please see the Microchip Packaging Specification located at http://www.microchip.com/packaging

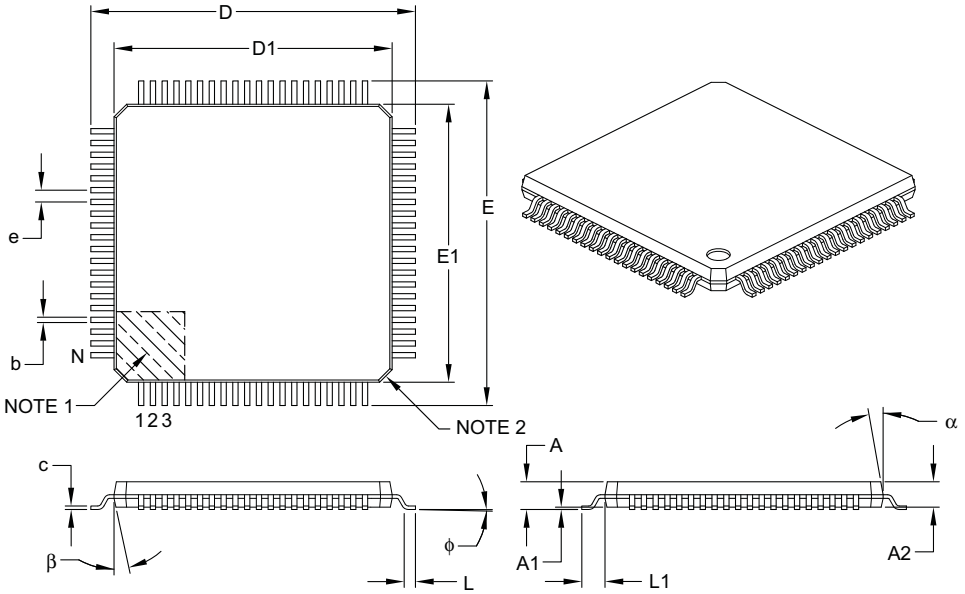

Units		MILLIMETERS		
Dimension Limits		MIN	NOM	MAX
Number of Leads	N	80		
Lead Pitch	e	0.50 BSC		
Overall Height	A	–	–	1.20
Molded Package Thickness	A2	0.95	1.00	1.05
Standoff	A1	0.05	–	0.15
Foot Length	L	0.45	0.60	0.75
Footprint	L1	1.00 REF		
Foot Angle	ϕ	0°	3.5°	7°
Overall Width	E	14.00 BSC		
Overall Length	D	14.00 BSC		
Molded Package Width	E1	12.00 BSC		
Molded Package Length	D1	12.00 BSC		
Lead Thickness	c	0.09	–	0.20
Lead Width	b	0.17	0.22	0.27
Mold Draft Angle Top	α	11°	12°	13°
Mold Draft Angle Bottom	β	11°	12°	13°

Notes:

1. Pin 1 visual index feature may vary, but must be located within the hatched area.
2. Chamfers at corners are optional; size may vary.
3. Dimensions D1 and E1 do not include mold flash or protrusions. Mold flash or protrusions shall not exceed 0.25 mm per side.
4. Dimensioning and tolerancing per ASME Y14.5M.
   BSC: Basic Dimension. Theoretically exact value shown without tolerances.
   REF: Reference Dimension, usually without tolerance, for information purposes only.

Microchip Technology Drawing C04-092B

80-Lead Plastic Thin Quad Flatpack (PT)-12x12x1mm Body, 2.00 mm Footprint [TQFP]

Note: For the most current package drawings, please see the Microchip Packaging Specification located at http://www.microchip.com/packaging

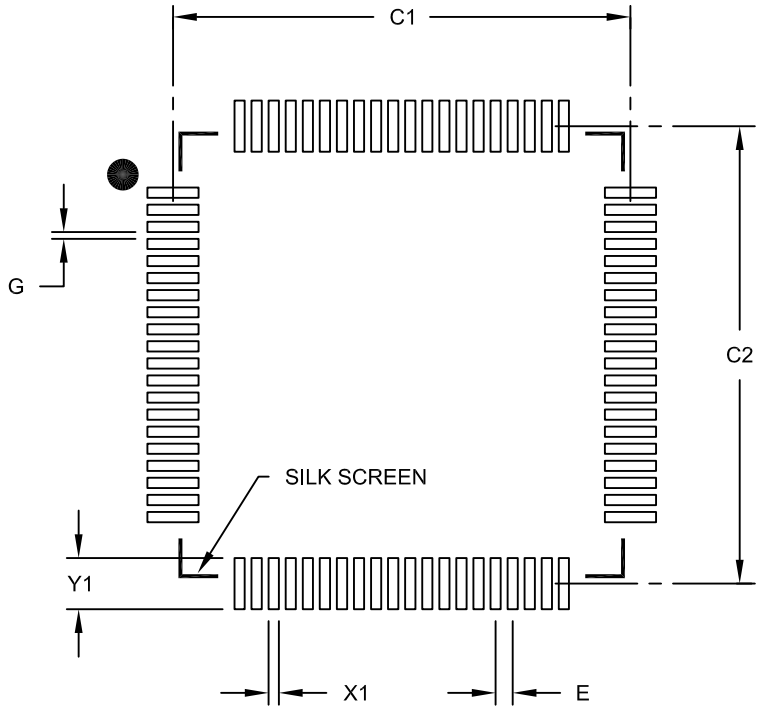

RECOMMENDED LAND PATTERN

Units		MILLIMETERS		
Dimension Limits		MIN	NOM	MAX
Contact Pitch	E	0.50 BSC		
Contact Pad Spacing	C1		13.40	
Contact Pad Spacing	C2		13.40	
Contact Pad Width (X80)	X1			0.30
Contact Pad Length (X80)	Y1			1.50
Distance Between Pads	G	0.20		

Notes:

1. Dimensioning and tolerancing per ASME Y14.5M
   BSC: Basic Dimension. Theoretically exact value shown without tolerances.

Microchip Technology Drawing No. C04-2092B

© 2017-2018 Microchip Technology Inc.

APPENDIX A: REVISION HISTORY

Revision A (August 2017)

This is the initial version of the document.

Revision B (June 2018)

This revision incorporates the following updates:

- Registers:
  - Updates Register 3-10, Register 3-13, Register 3-14, Register 3-15, Register 3-102, Register 3-103, Register 3-116, Register 3-117, Register 3-126, Register 3-127, Register 3-129, Register 3-132, Register 3-134, Register 3-135, Register 3-137, Register 3-138, Register 3-162, Register 3-196, Register 4-10, Register 4-11, Register 4-12, Register 4-13, Register 4-14, Register 4-15, Register 4-83 Register 4-86, Register 4-88, Register 10-1, Register 10-5, Register 11-1, Register 11-5, Register 15-3, Register 12-4, Register 12-15, Register 12-16, Register 12-23, Register 12-24, Register 18-3, Register 21-5, Register 21-14, Register 21-26, Register 21-33, Register 21-34, Register 21-35 and Register 21-37.
  - Deletes ADCSSL: ADC CVD Scan Select Register Low, FOSCSEL: Oscillator Source Selection Register, FOSC: Oscillator Configuration Register, FS1OSCSEL: Slave Oscillator Source Selection Register and FS1OSC: Slave Oscillator Configuration Register.
- Tables:
  - Updates Table 2, Table 3, Table 4, Table 5, Table 6, Table 7, Table 8, Table 9, Table 1-1, Table 3-4-Table 3-18 (adds additional information to the legend), Table 3-27, Table 3-35, Table 3-36, Table 3-37, Table 3-45, Table 4-3-Table 4-15 (adds additional information to the legend), Table 4-24, Table 4-33 through Table 4-37, Table 15-1, Table 21-2, Table 21-5, Table 22-2, Table 24-3, Table 24-5, Table 24-6, Table 24-7, Table 24-8, Table 24-9, Table 24-10, Table 24-11, Table 24-12, Table 24-13, Table 24-15, Table 24-16 Table 24-14, Table 24-17, Table 24-22, Table 24-29, Table 24-34-Table 24-40, Table 24-41, Table 24-44, Table 24-45 and Table 24-48.
  - Adds Table 24-13 through Table 24-17.
- Figures:
  - Updates Figure 3-24, Figure 3-26, Figure 4-7, Figure 4-20, Figure 14-5, Figure 14-6, Figure 14-7, Figure 14-8, Figure 20-1, Figure 21-2 and Figure .
- Sections:
  - Adds **"Referenced Sources"** section to front matter.
- Miscellaneous:
  - Adds headings to all SFR and Register tables.
  - Adds Error Correcting Code (ECC) information.
  - Adds the 48-Lead UQFN package to the document.
  - Removes External Count with External Gate information.

NOTES:

© 2017-2018 Microchip Technology Inc.

INDEX

A

Absolute Maximum Ratings 727
AC Characteristics 742
  Analog-to-Digital Conversion Timing Specifications 763
  Auxiliary PLL Clock Timing Specifications 744
  Capacitive Loading Requirements on Output Pins 742
  External Clock Timing Requirements 743
  High-Speed PWMx Timing Requirements 748
  I/O Timing Requirements 746
  I2Cx Bus Data Timing Requirements (Master Mode) 758
  I2Cx Bus Data Timing Requirements (Slave Mode) 760
  Internal FRC Accuracy 745
  Internal LPRC Accuracy 745
  Load Conditions 742
  PLL Clock Timing Specifications 744
  Reset, WDT, OST, PWRT Timing Requirements 747
  SPIx Master Mode (Full-Duplex, CKE = 0, CKP = x, SMP = 1) Timing Requirements 752
  SPIx Master Mode (Full-Duplex, CKE = 1, CKP = x, SMP = 1) Timing Requirements 751
  SPIx Master Mode (Half-Duplex, Transmit Only) Timing Requirements 750
  SPIx Maximum Data/Clock Rate Summary 749
  SPIx Slave Mode (Full-Duplex, CKE = 0, CKP = x, SMP = 0) Timing Requirements 754
  SPIx Slave Mode (Full-Duplex, CKE = 1, CKP = x, SMP = 0) Timing Requirements 756
  Temperature and Voltage Specifications 742
  UARTx I/O Timing Requirements 761
AC/DC Characteristics
  PGAx Specifications 765
Alternate Master Interrupt Vector Table 95
Analog-to-Digital Converter. *See* ADC.
Arithmetic Logic Unit (ALU) 45, 271
Assembler
  MPASM Assembler 724
  MPLAB Assembler, Linker, Librarian 724

B

Bit-Reversed Addressing 73, 293
  Example 74, 294
  Implementation 73, 293
  Sequence Table (16-Entry) 74, 294
Block Diagrams
  16-Bit Timer1 Module 643
  32-Bit Timer Mode 538
  ADC Module 222, 384
  ADC Shared Core 223, 385
  Addressing for Table Registers 78, 298
  CALL Stack Frame 69, 289
  CAN FD Module 179
  CLCx Input Source Selection 649
  CLCx Logic Function Combinatorial Options 648
  CLCx Module 647
  Conceptual SCCPx Modules 536
  Constant-Current Source 663
  CRC Module 659
  Data Access from Program Space Address Generation 75, 295
  Deadman Timer Module 170
  Dedicated ADC Core 385
  Direct Memory Access (DMA) 492
  dsPIC33CH128MP508 Family 23
  Dual 16-Bit Timer Mode 538
  High-Speed Analog Comparator 554
  I2Cx Module 624
  Input Capture x Module 540
  Interleaved PFC 32
  Internal Regulator 701
  Master Core Oscillator Subsystem 432
  Master CPU Core 37
  Master Reset System 89
  Master/Slave Core APLL and VCO 437
  Master/Slave Core PLL and VCO 434
  Master/Slave Core Shared Clock Sources 431
  MCLR Pin Connections 30
  Multiplexing Remappable Outputs for RPn 131
  Multiplexing Remappable Outputs for S1RPn 349
  Off-Line UPS 34
  Output Compare x Module 539
  PGAx Functions 413
  PGAx Module 412
  Phase-Shifted Full-Bridge Converter 33
  Programmer's Model 39
  Programmer's Model (Slave) 265
  PSV Read Address Generation 66, 286
  PTG 247
  PWM High-Level Module 502
  QEI Module 567
  Recommended Minimum Connection 30
  Remappable Input for U1RX 125, 343
  Reset System 310
  Security Segments 712
  SENTx Module 634
  Shared Port Structure 114, 332
  Simplified UARTx 584
  Slave Core Code Transfer 22
  Slave Core Oscillator Subsystem 433
  Slave CPU Core 263
  SPIx Master, Frame Master Connection 621
  SPIx Master, Frame Slave Connection 622
  SPIx Master/Slave Connection (Enhanced Buffer Modes) 621
  SPIx Master/Slave Connection (Standard Mode) 620
  SPIx Module (Enhanced Mode) 608
  SPIx Module (Standard Mode) 607
  SPIx Slave, Frame Master Connection 622
  SPIx Slave, Frame Slave Connection 622
  Suggested Oscillator Circuit Placement 31
  Timer Clock Generator 536
  Uncompressed/Compressed Format 300
  Watchdog Timer (WDT) 705
Brown-out Reset (BOR) 667, 703

C

C Compilers
  MPLAB XC 724
CAN FD Module
  Control/Status Registers 180
  Features 178
  Message Reception 178

Capture/Compare/PWM/Timer
Auto-Shutdown and Gating Sources (Master) 548
Auto-Shutdown and Gating Sources (Slave) 548
Auxiliary Output 541
Control/Status Registers 542
General Purpose Timer 537
Input Capture Mode 540
Output Compare Mode 539
Overview 535
Synchronization Sources (Master) 545
Synchronization Sources (Slave) 546
Time Base Generator 536
Capture/Compare/PWM/Timer (SCCP) 535
CLC
Control Registers 650
Overview 647
Code Examples
Configuring UART1 Input and Output Functions 125
Flash Write/Read 79
MSI Enable Operation 429
MSI Enable Operation in C 429
Port Write/Read 341
PRAM Write/Read 299
PWRSAV Instruction Syntax 471
Slave PRAM Load and Verify Routine 301
Using Master or Slave Auxiliary PLL with Internal FRC 438
Using Master PLL (50 MIPS) with POSC 467
Using Master PLL with 8 MHz Internal FRC 469
Using Master Primary PLL with 8 MHz Internal FRC 436
Using Slave PLL (60 MIPS) with POSC 468
Using Slave PLL with 8 MHz Internal FRC 470
Using Slave Primary PLL with 8 MHz Internal FRC 436
Code Protection 667
Code Protection, CodeGuard Security (Master Flash) 711
Code Protection, CodeGuard Security (Slave PRAM) 712
CodeGuard Security 667
Comparator/DAC
Control Registers 555
Features Overview 555
Overview 553
Configurable Logic Cell (CLC) 647
Configurable Logic Cell. *See* CLC.
Configuration Bits 667
Bit Values for Master Clock Selection 440
Bit Values for Slave Clock Selection 441
Controller Area Network (CAN FD) 178
Controller Area Network. *See* CAN.
CRC
Control Registers 660
Overview 659
Current Bias Generator
Control Registers 664
Current Bias Generator (CBG) 663
Current Bias Generator. *See* CBG.
Customer Change Notification Service 802
Customer Notification Service 802
Customer Support 802
Cyclic Redundancy Check. *See* CRC.

D

Data Address Space 49
Memory Map for dsPIC33CH128MP508 Devices 50
Near Data Space 49
Organization, Alignment 49
SFR Space 49
Width 49
Data Address Space (Slave) 274
Memory Map for Slave dsPIC33CH128MP508S1 Devices 275
Near Data Space 274
Organization, Alignment 274
Resources 276
SFR Space 274
Width 274
Data Space
Extended X 69
Paged Data Memory Space (figure) 67
Paged Memory Scheme 66
Data Space (Slave)
Extended X 289
Paged Data Memory Space (figure) 287
Paged Memory Scheme 286
DC Characteristics
ADC Delta Current 738
APLL Delta Current 737
Brown-out Reset (BOR) 741
Comparator + DAC Delta Current 738
Idle Current (I_{IDLE}) (Master Idle/Slave Sleep) 734
Idle Current (I_{IDLE}) (Master Sleep/Slave Idle) 735
Operating Current (I_{DD}) (Master Run/Slave Run) 730
Operating Current (I_{DD}) (Master Run/Slave Sleep) 732
Operating Current (I_{DD}) (Master Sleep/Slave Run) 731
Operating Current (I_{IDLE}) (Master Idle/Slave Idle) 733
Operating MIPS vs. Voltage 728
PGA Delta Current 738
Power-Down Current (I_{PD}) 736
PWM Delta Current 737
Watchdog Timer Delta Current (ΔI_{WDT}) 736
Deadman Timer (DMT) 170
Control Registers 171
Deadman Timer. *See* DMT.
Demo/Development Boards, Evaluation and Starter Kits 726
Development Support 723
Device Calibration 697
Addresses 697
and Identification 697
Device Overview 21
Device Programmer
MPLAB PM3 725
Device Variants 699
Direct Memory Access Controller. *See* DMA.
DMA
Channel Trigger Sources (Master) 499
Channel Trigger Sources (Slave) 500
Control Registers 496
Overview 491
Peripheral Module Disable (PMD) 495
Summary of Operations 493
Types of Data Transfers 494
Typical Setup 495

© 2017-2018 Microchip Technology Inc.

Doze Mode 473
DSP Engine 45, 271
dsPIC33CH128MP508S1 Family Interrupt
Vector Table 315
Dual Watchdog Timer (Dual WDT) 704
Control Registers 706
Overview 704

E

ECCADDRL (ECC Fault Inject Address
Compare High) 87
ECCADDRL (ECC Fault Inject Address
Compare Low) 87
ECCSTATH (ECC System Status Display High) 88
ECCSTATL (ECC System Status Display Low) 88
Electrical Characteristics 727
AC 742
ADC Specifications 762
Constant-Current Source Specifications 765
DACx Output (DACOUT Pin) Specifications 764
DACx Specifications 764
High-Speed Analog Comparator Specifications 763
I/O Pin Input Injection Current Specifications 740
I/O Pin Input Specifications 739
I/O Pin Output Specifications 740
Operating Voltage Specifications 729
Program Memory 741
Equations
Frame Time Calculations 635
I^2C Baud Rate Reload Calculation 625
Master/Slave Core AFPLLO Calculation 438
Master/Slave Core AFVCO Calculation 438
Master/Slave Core FPLLO Calculation 435
Master/Slave Core FVCO Calculation 435
Relationship Between Device and
SPIx Clock Speed 622
SYNCMIN and SYNCMAX Calculations 636
Tick Period Calculation 635
Errata 19
Error Correcting Code (ECC) 80
Control Registers 86
Fault Injection 81

F

Flexible Configuration 667

G

Getting Started Guidelines 29
Connection Requirements 29
Decoupling Capacitors 29
External Oscillator Pins 31
ICSP Pins 31
Master Clear ($\overline{MCLR}$) Pin 30
Oscillator Value Conditions on Start-up 32
Targeted Applications 32
Unused I/Os 32

H

High-Resolution PWM (HSPWM) with
Fine Edge Placement 501
High-Speed Analog Comparator with
Slope Compensation DAC 553
High-Speed, 12-Bit Analog-to-Digital Converter
(Master ADC) 221
Control/Status Registers 225
Features Overview 221
Resources 224
High-Speed, 12-Bit Analog-to-Digital Converter
(Slave ADC) 383
Control/Status Registers 387
Features Overview 383
Resources 386
HSPWM
Architecture 502
Control Registers 503
Overview 501

I

I^2C
Clock Rates 625
Communicating as Master in Single
Master Environment 623
Control/Status Registers 627
Reserved Addresses 626
Setting Baud Rate as Bus Master 625
Slave Address Masking 625
In-Circuit Debugger 710
MPLAB ICD 3 725
PICkit 3 Programmer 725
In-Circuit Emulation 667
In-Circuit Serial Programming (ICSP) 667, 710
Input Change Notification (ICN) 123, 341
Instruction Addressing Modes 70, 290
File Register Instructions 70, 290
Fundamental Modes Supported 70, 290
MAC Instructions 71, 291
MCU Instructions 70, 290
Move and Accumulator Instructions 71, 291
Other Instructions 71, 291
Instruction Set Summary 713
Overview 716
Symbols Used in Opcode Descriptions 714
Instruction-Based Power-Saving Modes 471
Idle 472
Sleep 472
Inter-Integrated Circuit. *See* I^2C.
Internet Address 802
Interrupts Coincident with Power Save Instructions 472

J

JTAG Boundary Scan Interface 667
JTAG Interface 710

M

Master CPU 35
Addressing Modes 36
Control/Status Registers 41
Data Space Addressing 36
Instruction Set 35
Registers 35
Resources 40
Master Flash Program Memory 77
Control Registers 81
Operations 77
RTSP Operation 79

Master I/O Ports 112
Configuring Analog/Digital Port Pins 115
Control Registers 116
Helpful Tips 134
Open-Drain Configuration 115
Parallel I/O (PIO) 112
Resources 135
Write/Read Timing 115
Master Interrupt Controller 93
Alternate Interrupt Vector Table (AIVT) 93
Control and Status Registers 103
INTCON1 103
INTCON2 103
INTCON3 103
INTCON4 103
INTTREG 103
Interrupt Vector Details 96
Interrupt Vector Table (IVT) 93
Reset Sequence 93
Resources 103
Status/Control Registers 104
Master Interrupt Vector Table 94
Master Memory Organization 46
Master Program Memory
Address Space 46
Construction 75
Data Access from Program Memory Using Table Instructions 76
Memory Map (dsPIC33CH128MPXXX Devices) 46
Memory Map (dsPIC33CH64MPXXX Devices) 47
Table Read High Instructions (TBLRDH) 76
Table Read Low Instructions (TBLRDL) 76
Interfacing with Data Memory Spaces 75
Organization 48
Reset Vector 48
Master Resets 89
Brown-out Reset (BOR) 89
Configuration Mismatch Reset (CM) 89
Control Register 91
Illegal Condition Reset (IOPUWR) 89
Illegal Opcode 89
Security 89
Uninitialized W Register 89
Master Clear ($\overline{\text{MCLR}}$) Pin Reset 89
Power-on Reset (POR) 89
RESET Instruction (SWR) 89
Resources 90
Trap Conflict Reset (TRAPR) 89
Watchdog Timer Time-out Reset (WDTO) 89
Master SFR Block
000h 52
100h 53
200h 54
300h-400h 55
500h 56
600h 57
700h 58
800h 58
900h 59
A00h 60
B00h 61
C00h 62
D00h 63
E00h 64
F00h 65
Master Slave Interface (MSI) 417
Master Slave Interface. *See* MSI.
Memory Organization
Resources 51
Microchip Internet Web Site 802
Modulo Addressing 72, 292
Applicability 73, 293
Operation Example 72, 292
Start and End Address 72, 292
W Address Register Selection 72, 292
MPLAB REAL ICE In-Circuit Emulator System 725
MPLAB X Integrated Development Environment Software 723
MPLINK Object Linker/MPLIB Object Librarian 724
MSI
Master Control Registers 417
Slave Control Registers 424
Slave Processor Control 429
Slave Reset Coupling Control 429

N

NVM Control Registers 82

O

Oscillator
CPU Clocking 439
Internal Fast RC (FRC) 466
Low-Power RC (LPRC) 466
Master Configuration Registers 440
Master SFRs 442
Primary (POSC) 466
Slave Configuration Registers 441
Slave SFRs 455
Oscillator with High-Frequency PLL 431

P

Packaging 767
Details 769
Marking Information 767
Peripheral Module Disable (PMD) 473
Control Registers 474
Peripheral Pin Select (PPS) 123, 342
Available Peripherals 123, 342
Available Pins 123, 342
Considerations 124
Control 342
Control Register Lock 124
Control Registers 139, 355
Controlling Configuration Changes 124
Input Mapping 124, 343
Master Remappable Output Pin Registers 132
Master Remappable Pin Inputs 126
Output Mapping 131, 349
Output Selection for Remappable Pins 133
Selectable Input Sources 129
Slave Output Selection for Remappable Pins 351
Slave Selectable Input Sources 347
Peripheral Trigger Generator (PTG) 246
Peripheral Trigger Generator. *See* PTG.
Pin and ANSELx Availability 113
Pinout I/O Descriptions (table) 24

© 2017-2018 Microchip Technology Inc.

Power-Saving Features
Clock Frequency and Switching 471
Resources 473
Power-Saving Features (Master and Slave) 471
PRAM for Slave dsPIC33CH128MP508S1 Devices 272
Program Address Space 272
Construction 295
Data Access from Program Memory Using
Table Instructions 296
Program Memory
Interfacing with Data Memory Spaces 295
Organization 273
Reset Vector 273
Programmable Gain Amplifier (PGA) Slave 412
Control Registers 415
Description 413
Resources 414
Programmable Gain Amplifier. *See* PGA.
Programmer's Model 38
Register Descriptions 38
PTG
Command Options 258
Control/Status Registers 248
Features 246
Input Descriptions 259
Output Descriptions 259
Step Command Format/Description 257

Q

QEI
Control and Status Registers 568
Overview 565
Truth Table 566
Quadrature Encoder Interface (QEI) 565
Quadrature Encoder Interface. *See* QEI.

R

Referenced Sources 20
Register Maps
Master Configuration 668
Master Interrupt Enable 100
Master Interrupt Flag 100
Master Interrupt Priority 101
Master PMD 489
Master PPS Input Control 168
Master PPS Output Control 169
PORTA 136, 380
PORTB 136, 380
PORTC 137, 381
PORTD 137, 381
PORTE 138, 382
Slave Configuration 669
Slave Interrupt Enable 319
Slave Interrupt Flag 319
Slave Interrupt Priority 320
Slave PMD 489
Slave PPS Input Control 348
Slave PPS Output Control 352
Registers
ACLKCON1 (Master Auxiliary Clock Control) 449
ACLKCON1 (Slave Auxiliary Clock Control) 461
ADCAL1H (ADC Calibration 1 High) 407
ADCMPxCON (ADC Digital
Comparator x Control) 242, 408
ADCMPxENH (ADC Digital Comparator x
Channel Enable High) 243, 409
ADCMPxENL (ADC Digital Comparator x
Channel Enable Low) 243, 409
ADCON1H (ADC Control 1 High) 226, 388
ADCON1L (ADC Control 1 Low) 225, 387
ADCON2H (ADC Control 2 High) 228, 390
ADCON2L (ADC Control 2 Low) 227, 389
ADCON3H (ADC Control 3 High) 230, 392
ADCON3L (ADC Control 3 Low) 229, 391
ADCON4H (ADC Control 4 High) 394
ADCON4L (ADC Control 4 Low) 393
ADCON5H (ADC Control 5 High) 232, 396
ADCON5L (ADC Control 5 Low) 231, 395
ADCORExH (Dedicated ADC Core x
Control High) 398
ADCORExL (Dedicated ADC Core x
Control Low) 397
ADEIEH (ADC Early Interrupt Enable High) 234, 400
ADEIEL (ADC Early Interrupt Enable Low) 234, 400
ADEISTATH (ADC Early Interrupt
Status High) 235, 401
ADEISTATL (ADC Early Interrupt
Status Low) 235, 401
ADFLxCON (ADC Digital Filter x Control) 244, 410
ADIEH (ADC Interrupt Enable High) 238, 403
ADIEL (ADC Interrupt Enable Low) 238, 403
ADLVLTRGH (ADC Level-Sensitive Trigger
Control High) 233, 399
ADLVLTRGL (ADC Level-Sensitive Trigger
Control Low) 233, 399
ADMOD0H (ADC Input Mode Control 0 High) 236
ADMOD0L (ADC Input Mode
Control 0 Low) 236, 402
ADMOD1L (ADC Input Mode Control 1 Low) 237
ADSTATH (ADC Data Ready Status High) 239, 404
ADSTATL (ADC Data Ready Status Low) 239, 404
ADTRIGnL/ADTRIGnH (ADC Channel Trigger n(x)
Selection Low/High) 240, 405
ANSELx (Analog Select for PORTx) 116, 334
APLLDIV (Slave APLL Output Divider) 463
APLLDIV1 (Master APLL Output Divider) 451
APLLFBD1 (Master APLL Feedback Divider) 450
APLLFBD1 (Slave APLL Feedback Divider) 462
BIASCON (Current Bias Generator Control) 664
C1BDIAG0H (CAN Bus Diagnostics 0 High) 214
C1BDIAG0L (CAN Bus Diagnostics 0 Low) 214
C1BDIAG1H (CAN Bus Diagnostics 1 High) 215
C1BDIAG1L (CAN Bus Diagnostics 1 Low) 216
C1CONH (CAN Control High) 180
C1CONL (CAN Control Low) 182
C1DBTCFGH (CAN Data Bit Time
Configuration High) 184
C1DBTCFGL (CAN Data Bit Time
Configuration Low) 184
C1FIFOBAH (CAN Message Memory Base
Address High) 198
C1FIFOBAL (CAN Message Memory Base
Address Low) 198
C1FIFOCONHx (CAN FIFO Control x High) 202
C1FIFOCONLx (CAN FIFO Control x Low) 203
C1FIFOSTAx (CAN FIFO Status x) 205
C1FIFOUAHx (CAN FIFO User Address x High) 210
C1FIFOUALx (CAN FIFO User Address x Low) 210

C1FLTCONxH (CAN Filter Control x High) 217
C1FLTCONxL (CAN Filter Control x Low) 218
C1FLTOBJxH (CAN Filter Object x High) 219
C1FLTOBJxL (CAN Filter Object x Low) 219
C1INTH (CAN Interrupt High) 191
C1INTL (CAN Interrupt Low) 192
C1MASKxH (CAN Mask x High) 220
C1MASKxL (CAN Mask x Low) 220
C1NBTCFGH (CAN Nominal Bit Time Configuration High) 183
C1NBTCFGL (CAN Nominal Bit Time Configuration Low) 183
C1RXIFH (CAN Receive Interrupt Status High) 193
C1RXIFL (CAN Receive Interrupt Status Low) 193
C1RXOVIFH (CAN Receive Overflow Interrupt Status High) 194
C1RXOVIFL (CAN Receive Overflow Interrupt Status Low) 194
C1TBCH (CAN Time Base Counter High) 187
C1TBCL (CAN Time Base Counter Low) 187
C1TDCH (CAN Transmitter Delay Compensation High) 185
C1TDCL (CAN Transmitter Delay Compensation Low) 186
C1TEFCONH (CAN Transmit Event FIFO Control High) 207
C1TEFCONL (CAN Transmit Event FIFO Control Low) 208
C1TEFSTA (CAN Transmit Event FIFO Status) 209
C1TEFUAH (CAN Transmit Event FIFO User Address High) 211
C1TEFUAL (CAN Transmit Event FIFO User Address Low) 211
C1TRECH (CAN Transmit/Receive Error Count High) 213
C1TRECL (CAN Transmit/Receive Error Count Low) 213
C1TSCONH (CAN Timestamp Control High) 188
C1TSCONL (CAN Timestamp Control Low) 188
C1TXATIFH (CAN Transmit Attempt Interrupt Status High) 196
C1TXATIFL (CAN Transmit Attempt Interrupt Status Low) 196
C1TXIFH (CAN Transmit Interrupt Status High) 195
C1TXIFL (CAN Transmit Interrupt Status Low) 195
C1TXQCONH (CAN Transmit Queue Control High) 199
C1TXQCONL (CAN Transmit Queue Control Low) 200
C1TXQSTA (CAN Transmit Queue Status) 201
C1TXQUAH (CAN Transmit Queue User Address High) 212
C1TXQUAL (CAN Transmit Queue User Address Low) 212
C1TXREQH (CAN Transmit Request High) 197
C1TXREQL (CAN Transmit Request Low) 197
C1VECH (CAN Interrupt Code High) 189
C1VECL (CAN Interrupt Code Low) 190
CANCLKCON (CAN Clock Control) 452
CCPxCON1H (CCPx Control 1 High) 544
CCPxCON1L (CCPx Control 1 Low) 542
CCPxCON2H (CCPx Control 2 High) 549
CCPxCON2L (CCPx Control 2 Low) 547
CCPxCON3H (CCPx Control 3 High) 550
CCPxSTATL (CCPx Status) 551
CLCxCONH (CLCx Control High) 651
CLCxCONL (CLCx Control Low) 650
CLCxGLSH (CLCx Gate Logic Input Select High) 656
CLCxGLSL (CLCx Gate Logic Input Select Low) 654
CLCxSEL (CLCx Input MUX Select) 652
CLKDIV (Master Clock Divider) 444
CLKDIV (Slave Clock Divider) 457
CMBTRIGH (Combinational Trigger High) 508
CMBTRIGL (Combinational Trigger Low) 507
CNCONx (Change Notification Control for PORTx) 120, 338
CNEN0x (Interrupt Change Notification Enable for PORTx) 120, 338
CNEN1x (Interrupt Change Notification Edge Select for PORTx) 121, 339
CNFx (Interrupt Change Notification Flag for PORTx) 122, 340
CNPDx (Change Notification Pull-Down Enable for PORTx) 119, 337
CNPUx (Change Notification Pull-up Enable for PORTx) 119, 337
CNSTATx (Interrupt Change Notification Status for PORTx) 121, 339
CORCON (Core Control) 43, 105, 269
CORCON (Slave Core Control) 324
CRCCONH (CRC Control High) 661
CRCCONL (CRC Control Low) 660
CRCXORH (CRC XOR Polynomial, High Byte) 662
CRCXORL (CRC XOR Polynomial, Low Byte) 662
CTXTSTAT (CPU W Register Context Status) 44, 270
DACCTRL1L (DAC Control 1 Low) 556
DACCTRL2H (DAC Control 2 High) 557
DACCTRL2L (DAC Control 2 Low) 557
DACxCONH (DACx Control High) 558
DACxCONL (DACx Control Low) 558
DACxDATH (DACx Data High) 560
DACxDATL (DACx Data Low) 560
DEVID (Device ID) 698
DEVREV (Device Revision) 698
DMACHn (DMA Channel n Control) 497
DMACON (DMA Engine Control) 496
DMAINTn (DMA Channel n Interrupt) 498
DMTCLR (Deadman Timer Clear) 172
DMTCNTH (Deadman Timer Count High) 174
DMTCNTL (Deadman Timer Count Low) 174
DMTCON (Deadman Timer Control) 171
DMTHOLDREG (DMT Hold) 177
DMTPRECLR (Deadman Timer Preclear) 171
DMTPSCNTH (DMT Post-Configure Count Status High) 175
DMTPSCNTL (DMT Post-Configure Count Status Low) 175
DMTPSINTVH (DMT Post-Configure Interval Status High) 176
DMTPSINTVL (DMT Post-Configure Interval Status Low) 176
DMTSTAT (Deadman Timer Status) 173
ECCADDRH (ECC Fault Inject Address Compare High) 308
ECCADDRL (ECC Fault Inject Address Compare Low) 308

© 2017-2018 Microchip Technology Inc.

ECCCONH (ECC Fault Injection Configuration High) ... 86, 307
ECCCONL (ECC Fault Injection Configuration Low) ... 86, 307
ECCSTATH (ECC System Status Display High) ... 309
ECCSTATL (ECC System Status Display Low) ... 309
FALTREG Configuration ... 681
FBSLIM Configuration ... 671
FCFGPRA0 (PORTA Configuration) ... 686
FCFGPRB0 (PORTB Configuration) ... 687
FCFGPRC0 (PORTC Configuration) ... 687
FCFGPRD0 (PORTD Configuration) ... 688
FCFGPRE0 (PORTE Configuration ... 688
FDEVOPT Configuration ... 680
FDMT Configuration ... 679
FDMTCNTH Configuration ... 678
FDMTCNTL Configuration ... 678
FDMTIVTH Configuration ... 677
FDMTIVTL Configuration ... 677
FICD Configuration ... 676
FMBXHS1 Configuration ... 684
FMBXHS2 Configuration ... 685
FMBXHSEN Configuration ... 686
FMBXM Configuration ... 682
FOSC Configuration ... 673
FOSCSEL Configuration ... 672
FPOR Configuration ... 675
FS1ALTREG Configuration (Slave) ... 695
FS1DEVOPT Configuration (Slave) ... 694
FS1ICD Configuration (Slave) ... 693
FS1OSC Configuration (Slave) ... 690
FS1OSCSEL Configuration (Slave) ... 689
FS1POR Configuration (Slave) ... 692
FS1WDT Configuration (Slave) ... 691
FSCL (Frequency Scale) ... 504
FSEC Configuration ... 670
FSIGN Configuration ... 671
FSMINPER (Frequency Scaling Minimum Period) ... 504
FWDT Configuration ... 674
I2CxCONH (I2Cx Control High) ... 629
I2CxCONL (I2Cx Control Low) ... 627
I2CxMSK (I2Cx Slave Mode Address Mask) ... 631
I2CxSTAT (I2Cx Status) ... 630
IBIASCONH (Current Bias Generator Current Source Control High) ... 665
IBIASCONL (Current Bias Generator Current Source Control Low) ... 666
INDXxCNTH (Index x Counter High) ... 579
INDXxCNTL (Index x Counter Low) ... 579
INDXxHLDH (Index x Counter Hold High) ... 580
INDXxHLDL (Index x Counter Hold Low) ... 580
INTCON1 (Interrupt Control 1) ... 106
INTCON1 (Slave Interrupt Control 1) ... 325
INTCON2 (Interrupt Control 2) ... 108
INTCON2 (Slave Interrupt Control 2) ... 327
INTCON3 (Interrupt Control 3) ... 109
INTCON3 (Slave Interrupt Control 3) ... 328
INTCON4 (Interrupt Control 4) ... 110
INTCON4 (Slave Interrupt Control 4) ... 328
INTTREG (Interrupt Control and Status) ... 111
INTTREG (Slave Interrupt Control and Status) ... 329
INTxTMRH (Interval x Timer High) ... 577
INTxTMRL (Interval x Timer Low) ... 577
INTXxHLDH (Index x Counter Hold High) ... 578
INTXxHLDL (Index x Counter Hold Low) ... 578
LATx (Output Data for PORTx) ... 118, 336
LFSR (Linear Feedback Shift) ... 513
LOGCONy (Combinatorial PWM Logic Control y) ... 509
MDC (Master Duty Cycle) ... 505
MPER (Master Period) ... 506
MPHASE (Master Phase) ... 505
MRSWFDATA (Master Read (Slave Write) FIFO Data) ... 423
MSI1CON (MSI1 Master Control) ... 418
MSI1FIFOCS (MSI1 Master FIFO Control/Status) ... 422
MSI1KEY (MSI1 Master Interlock Key) ... 420
MSI1MBXnD (MSI1 Master Mailbox n Data) ... 421
MSI1MBXS (MSI1 Master Mailbox Data Transfer Status) ... 420
MSI1STAT (MSI1 Master Status) ... 419
MWSRFDATA (Master Write (Slave Read) FIFO Data) ... 423
NVMADR (Nonvolatile Memory Lower Address) ... 84
NVMADR (Slave Program Memory Lower Address) ... 305
NVMADRU (Nonvolatile Memory Upper Address) ... 84
NVMADRU (Slave Program Memory Upper Address) ... 305
NVMCON (Nonvolatile Memory (NVM) Control) ... 82
NVMCON (Program Memory Slave Control) ... 303
NVMKEY (Nonvolatile Memory Key) ... 85
NVMKEY (Slave Nonvolatile Memory Key) ... 306
NVMSRCADR (NVM Source Data Address) ... 85
NVMSRCADR (Slave NVM Source Data Address) ... 306
ODCx (Open-Drain Enable for PORTx) ... 118, 336
OSCCON (Master Oscillator Control) ... 442
OSCCON (Slave Oscillator Control) ... 455
OSCTUN (Master FRC Oscillator Tuning) ... 447
PCLKCON (PWM Clock Control) ... 503
PGAxCAL (PGAx Calibration) ... 416
PGAxCON (PGAx Control) ... 415
PGxCAP (PWM Generator x Capture) ... 534
PGxCONH (PWM Generator x Control High) ... 515
PGxCONL (PWM Generator x Control Low) ... 514
PGxDC (PWM Generator x Duty Cycle) ... 530
PGxDCA (PWM Generator x Duty Cycle Adjustment) ... 531
PGxDTH (PWM Generator x Dead-Time High) ... 533
PGxDTL (PWM Generator x Dead-Time Low) ... 533
PGxEVTH (PWM Generator x Event High) ... 527
PGxEVTL (PWM Generator x Event Low) ... 526
PGxIOCONH (PWM Generator x I/O Control High) ... 520
PGxIOCONL (PWM Generator x I/O Control Low) ... 519
PGxLEBH (PWM Generator x Leading-Edge Blanking High) ... 529
PGxLEBL (PWM Generator x Leading-Edge Blanking Low) ... 528
PGxPER (PWM Generator x Period) ... 531
PGxPHASE (PWM Generator x Phase) ... 530
PGxSTAT (PWM Generator x Status) ... 517
PGxTRIGA (PWM Generator x Trigger A) ... 532
PGxTRIGB (PWM Generator x Trigger B) ... 532
PGxTRIGC (PWM Generator x Trigger C) ... 532
PGxyPCIH (PWM Generator xy PCI High) ... 524
PGxyPCIL (PWM Generator xy PCI Low) ... 521

PLLDIV (Master PLL Output Divider) 448
PLLDIV (Slave PLL Output Divider) 460
PLLFBD (Master PLL Feedback Divider) 446
PLLFBD (Slave PLL Feedback Divider) 459
PMD1 (Master PMD1 Control Low) 475
PMD1 (Slave PMD1 Control) 483
PMD2 (Master PMD2 Control High) 476
PMD2 (Slave PMD2 Control) 484
PMD3 (Master PMD3 Control Low) 477
PMD4 (Master PMD4 Control) 478
PMD4 (Slave PMD4 Control) 485
PMD6 (Master PMD6 Control High) 479
PMD6 (Slave PMD6 Control High) 486
PMD7 (Master PMD7 Control Low) 480
PMD7 (Slave PMD7 Control Low) 487
PMD8 (Master PMD8 Control) 481
PMD8 (Slave PMD8 Control) 488
PMDCON (Slave PMD Control) 482
PMDCONL (Master PMD Control Low) 474
PORTx (Input Data for PORTx) 117, 335
POSxCNTH (Position x Counter High) 573
POSxCNTL (Position x Counter Low) 573
POSxHLDH (Position x Counter Hold High) 574
POSxHLDL (Position x Counter Hold Low) 574
PTGADJ (PTG Adjust) 255
PTGBTE (PTG Broadcast Trigger Enable Low) 251
PTGBTEH (PTG Broadcast Trigger Enable High) 251
PTGC0LIM (PTG Counter 0 Limit) 254
PTGC1LIM (PTG Counter 1 Limit) 254
PTGCON (PTG Control/Status High) 250
PTGCST (PTG Control/Status Low) 248
PTGHOLD (PTG Hold) 252
PTGL0 (PTG Literal 0) 255
PTGQPTR (PTG Step Queue Pointer) 256
PTGQUEn (PTG Step Queue n Pointer) 256
PTGSDLIM (PTG Step Delay Limit) 253
PTGT0LIM (PTG Timer0 Limit) 252
PTGT1LIM (PTG Timer1 Limit) 253
PWMEVTy (PWM Event Output Control y) 511
QEIxCONL (QEIx Control Low) 568
QEIxGECH (QEIx Greater Than or Equal Compare High) 581
QEIxGECL (QEIx Greater Than or Equal Compare Low) 581
QEIxIOCH (QEIx I/O Control High) 571
QEIxIOCL (QEIx I/O Control Low) 569
QEIxLECH (QEIx Less than or Equal Compare High) 582
QEIxLECL (QEIx Less than or Equal Compare Low) 582
QEIxSTAT (QEIx Status) 572
RCON (Reset Control) 91, 312, 708
REFOCONH (Master Reference Clock Control High) 454
REFOCONH (Slave Reference Clock Control High) 465
REFOCONL (Master Reference Clock Control Low) 453
REFOCONL (Slave Reference Clock Control Low) 464
RPCON (Peripheral Remapping Configuration) 139, 355
RPIN0 (Peripheral Pin Select Input 0) 355
RPINR0 (Peripheral Pin Select Input 0) 139
RPINR1 (Peripheral Pin Select Input 1) 140, 356
RPINR10 (Peripheral Pin Select Input 10) 144
RPINR11 (Peripheral Pin Select Input 11) 145, 359
RPINR12 (Peripheral Pin Select Input 12) 145, 359
RPINR13 (Peripheral Pin Select Input 13) 146, 360
RPINR14 (Peripheral Pin Select Input 14) 146, 360
RPINR15 (Peripheral Pin Select Input 15) 147, 361
RPINR18 (Peripheral Pin Select Input 18) 147, 361
RPINR19 (Peripheral Pin Select Input 19) 148
RPINR2 (Peripheral Pin Select Input 2) 140, 356
RPINR20 (Peripheral Pin Select Input 20) 148, 362
RPINR21 (Peripheral Pin Select Input 21) 149, 362
RPINR22 (Peripheral Pin Select Input 22) 149
RPINR23 (Peripheral Pin Select Input 23) 150, 363
RPINR26 (Peripheral Pin Select Input 26) 150
RPINR3 (Peripheral Pin Select Input 3) 141, 357
RPINR30 (Peripheral Pin Select Input 30) 151
RPINR37 (Peripheral Pin Select Input 37) 151, 363
RPINR38 (Peripheral Pin Select Input 38) 152, 364
RPINR4 (Peripheral Pin Select Input 4) 141, 357
RPINR42 (Peripheral Pin Select Input 42) 152, 364
RPINR43 (Peripheral Pin Select Input 43) 153, 365
RPINR44 (Peripheral Pin Select Input 44) 153, 365
RPINR45 (Peripheral Pin Select Input 45) 154, 366
RPINR46 (Peripheral Pin Select Input 46) 154, 366
RPINR47 (Peripheral Pin Select Input 47) 155, 367
RPINR5 (Peripheral Pin Select Input 5) 142, 358
RPINR6 (Peripheral Pin Select Input 6) 142, 358
RPINR7 (Peripheral Pin Select Input 7) 143
RPINR8 (Peripheral Pin Select Input 8) 143
RPINR9 (Peripheral Pin Select Input 9) 144
RPOR0 (Peripheral Pin Select Output 0) 156, 368
RPOR1 (Peripheral Pin Select Output 1) 156, 368
RPOR10 (Peripheral Pin Select Output 10) 161, 373
RPOR11 (Peripheral Pin Select Output 11) 161, 373
RPOR12 (Peripheral Pin Select Output 12) 162, 374
RPOR13 (Peripheral Pin Select Output 13) 162, 374
RPOR14 (Peripheral Pin Select Output 14) 163, 375
RPOR15 (Peripheral Pin Select Output 15) 163, 375
RPOR16 (Peripheral Pin Select Output 16) 164, 376
RPOR17 (Peripheral Pin Select Output 17) 164, 376
RPOR18 (Peripheral Pin Select Output 18) 165, 377
RPOR19 (Peripheral Pin Select Output 19) 165, 377
RPOR2 (Peripheral Pin Select Output 2) 157, 369
RPOR20 (Peripheral Pin Select Output 20) 166, 378
RPOR21 (Peripheral Pin Select Output 21) 166, 378
RPOR22 (Peripheral Pin Select Output 22) 167, 379
RPOR3 (Peripheral Pin Select Output 3) 157, 369
RPOR4 (Peripheral Pin Select Output 4) 158, 370
RPOR5 (Peripheral Pin Select Output 5) 158, 370
RPOR6 (Peripheral Pin Select Output 6) 159, 371
RPOR7 (Peripheral Pin Select Output 7) 159, 371
RPOR8 (Peripheral Pin Select Output 8) 160, 372
RPOR9 (Peripheral Pin Select Output 9) 160, 372
SENTxCON1 (SENTx Control 1) 637
SENTxDATH (SENTx Receive Data High) 641
SENTxDATL (SENTx Receive Data Low) 641
SENTxSTAT (SENTx Status) 639
SI1CON (MSI1 Slave Control) 424
SI1FIFOCS (MSI1 Slave FIFO Status) 427
SI1MBX (MSI1 Slave Mailbox Data Transfer Status) 426
SI1MBXnD (MSI1 Slave Mailbox n Data) 426
SI1STAT (MSI1 Slave Status) 425
SLPxCONH (DACx Slope Control High) 561

© 2017-2018 Microchip Technology Inc.

SLPxCONL (DACx Slope Control Low) 562
SLPxDAT (DACx Slope Data)..... 564
SPIxCON1H (SPIx Control 1 High)..... 612
SPIxCON1L (SPIx Control 1 Low) 610
SPIxCON2L (SPIx Control 2 Low) 614
SPIxIMSKH (SPIx Interrupt Mask High)..... 619
SPIxIMSKL (SPIx Interrupt Mask Low) 618
SPIxSTATH (SPIx Status High) 617
SPIxSTATL (SPIx Status Low) 615
SR (CPU STATUS)..... 41, 104, 267, 323
SRMWFDATA (Slave Read (Master Write) FIFO Data)..... 428
SWMRFDATA (Slave Write (Master Read) FIFO Data)..... 428
T1CON (Timer1 Control)..... 644
TRISx (Output Enable for PORTx Register) 335
TRISx (Output Enable for PORTx)..... 117
UxBRG (UARTx Baud Rate)..... 594
UxBRGH (UARTx Baud Rate High)..... 594
UxINT (UARTx Interrupt) 603
UxMODE (UARTx Configuration) 586
UxMODEH (UARTx Configuration High) 588
UxP1 (UARTx Timing Parameter 1)..... 596
UxP2 (UARTx Timing Parameter 2)..... 597
UxP3 (UARTx Timing Parameter 3)..... 598
UxP3H (UARTx Timing Parameter 3 High)..... 598
UxRXCHK (UARTx Receive Checksum)..... 600
UxRXREG (UARTx Receive Buffer) 595
UxSCCON (UARTx Smart Card Configuration)..... 601
UxSCINT (UARTx Smart Card Interrupt)..... 602
UxSTA (UARTx Status) 590
UxSTAH (UARTx Status High) 592
UxTXCHK (UARTx Transmit Checksum) 599
UxTXREG (UARTx Transmit Buffer)..... 595
VELxCNTH (Velocity x Counter High) 575
VELxCNTL (Velocity x Counter Low)..... 575
VELxHLDH (Velocity x Counter Hold High) 576
VELxHLDL (Velocity x Counter Hold Low)..... 576
VREGCON (Voltage Regulator Control)..... 702
WDTCONH (Watchdog Timer Control High) 707
WDTCONL (Watchdog Timer Control Low)..... 706
Regulator Control
Sleep Mode..... 702
Revision History 791

S

Serial Peripheral Interface (SPI) 605
Control/Status Registers 610
Overview 605
Serial Peripheral Interface. *See* SPI.
Single-Edge Nibble Transmission (SENT)..... 633
Control/Status Registers 637
Overview 633
Protocol Data Frames 634
Receive Mode 636
Configuration 636
Transmit Mode 635
Configuration 635
Single-Edge Nibble Transmission for Automotive Applications..... 633
Single-Edge Nibble Transmission. *See* SENT.
Slave CPU 261
Addressing Modes..... 262
Control/Status Registers..... 267
Data Space Addressing..... 262
Instruction Set..... 261
Programmer's Model 264
Register Descriptions 264
Registers 261
Resources 266
Slave I/O Ports 330
5V Input Tolerant Ports..... 331
Configuring Analog/Digital Port Pins 333
Control/Status Registers..... 334
Helpful Tips..... 353
Open-Drain Configuration..... 333
Parallel I/O (PIO) 330
Pin and ANSELx Availability..... 331
Resources 354
Write/Read Timing..... 333
Slave Interrupt Controller..... 314
Control/Status Registers..... 323
Interrupt Vector Details..... 316
Interrupt Vector Table (IVT)..... 314
Reset Sequence 314
Resources 322
Slave Memory Organization 272
Slave PRAM Program Memory..... 297
Control/Status Registers..... 303
Dual Partition Considerations 301
Error Correcting Code (ECC) 302
Control/Status Registers..... 307
Fault Injection 302
Master to Slave Image Loading (MSIL) 300
Programming Operations 297
RTSP Operation 299
Slave Remappable Output Pin Registers 350
Slave Remappable Pin Inputs 344
Slave Resets 310
Brown-out Reset (BOR)..... 310
Configuration Mismatch Reset (CM) 310
Control Register..... 312
Illegal Condition Reset (IOPUWR) 310
Illegal Opcode 310
Security 310
Uninitialized W Register 310
Master Clear ($\overline{\text{MCLR}}$) Pin Reset..... 310
Power-on Reset (POR)..... 310
RESET Instruction (SWR) 310
Resources 311
Trap Conflict Reset (TRAPR) 310
Watchdog Timer Time-out Reset (WDTO) 310
Slave SFR Block
000h..... 277
100h..... 278
200h..... 278
300h..... 279
400h..... 280
800h..... 281
900h..... 282
A00h 282
B00h 283
C00h 283
D00h 284
E00h 285
F00h 285

Software Simulator
MPLAB X SIM 725
Special Features of the CPU 667

T

Thermal Operating Conditions 728
Thermal Packaging Characteristics 728
Third-Party Development Tools 726
Timer1 643
Control Register 644
Timing Diagrams
BOR and Master Clear Reset Timing Characteristics 746
Clock/Instruction Cycle 439
External Clock 742
High-Speed PWMx Fault Characteristics 748
High-Speed PWMx Module Characteristics 748
I/O Characteristics 746
I2Cx Bus Data Characteristics (Master Mode) 757
I2Cx Bus Data Characteristics (Slave Mode) 759
I2Cx Bus Start/Stop Bits Characteristics (Master Mode) 757
I2Cx Bus Start/Stop Bits Characteristics (Slave Mode) 759
QEI Interface Signals 565
SPIx Master Mode (Full-Duplex, CKE = 0, CKP = x, SMP = 1) 752
SPIx Master Mode (Full-Duplex, CKE = 1, CKP = x, SMP = 1) 751
SPIx Master Mode (Half-Duplex, Transmit Only, CKE = 0) 749
SPIx Master Mode (Half-Duplex, Transmit Only, CKE = 1) 750
SPIx Slave Mode (Full-Duplex, CKE = 0, CKP = x, SMP = 0) 753
SPIx Slave Mode (Full-Duplex, CKE = 1, CKP = x, SMP = 0) 755
UARTx I/O Characteristics 761

U

UART
Architectural Overview 584
Character Frame 585
Control/Status Registers 586
Data Buffers 585
Protocol Extensions 585
Universal Asynchronous Receiver Transmitter (UART) 583
Overview 583
Universal Asynchronous Receiver Transmitter. *See* UART.
User OTP Memory 701

V

Voltage Regulators (On-Chip) 701

W

Watchdog Timer (WDT) 667
WWW Address 802
WWW, On-Line Support 19

© 2017-2018 Microchip Technology Inc.

THE MICROCHIP WEB SITE

Microchip provides online support via our WWW site at www.microchip.com. This web site is used as a means to make files and information easily available to customers. Accessible by using your favorite Internet browser, the web site contains the following information:

- **Product Support** – Data sheets and errata, application notes and sample programs, design resources, user's guides and hardware support documents, latest software releases and archived software
- **General Technical Support** – Frequently Asked Questions (FAQ), technical support requests, online discussion groups, Microchip consultant program member listing
- **Business of Microchip** – Product selector and ordering guides, latest Microchip press releases, listing of seminars and events, listings of Microchip sales offices, distributors and factory representatives

CUSTOMER CHANGE NOTIFICATION SERVICE

Microchip's customer notification service helps keep customers current on Microchip products. Subscribers will receive e-mail notification whenever there are changes, updates, revisions or errata related to a specified product family or development tool of interest.

To register, access the Microchip web site at www.microchip.com. Under "Support", click on "Customer Change Notification" and follow the registration instructions.

CUSTOMER SUPPORT

Users of Microchip products can receive assistance through several channels:

- Distributor or Representative
- Local Sales Office
- Field Application Engineer (FAE)
- Technical Support

Customers should contact their distributor, representative or Field Application Engineer (FAE) for support. Local sales offices are also available to help customers. A listing of sales offices and locations is included in the back of this document.

Technical support is available through the web site at: http://microchip.com/support

NOTES:

© 2017-2018 Microchip Technology Inc.

PRODUCT IDENTIFICATION SYSTEM

To order or obtain information, e.g., on pricing or delivery, refer to the factory or the listed sales office.

dsPIC 33 CH 64 MP 508 T I / PT - XXX

- **Microchip Trademark**
- **Architecture**
- **Flash Memory Family**
- **Program Memory Size (Kbyte)**
- **Product Group**
- **Pin Count**
- **Tape and Reel Flag (if applicable)**
- **Temperature Range**
- **Package**
- **Pattern**

Architecture:	33	=	16-Bit Digital Signal Controller
Flash Memory Family:	CH	=	Dual Core
Product Group:	MP	=	Motor Control/Power Supply
Pin Count:	02	=	28-pin
	03	=	36-pin
	04	=	48-pin
	06	=	64-pin
	08	=	80-pin
Temperature Range:	I	=	-40°C to +85°C (Industrial)
	E	=	-40°C to +125°C (Extended)
Package:	SS	=	Plastic Shrink Small Outline – (28-pin) 5.30 mm body (SSOP)
	2N	=	Ultra Thin Plastic Quad Flat, No Lead – (28-pin) 6x6 mm body (UQFN)
	M5	=	Ultra Thin Plastic Quad Flat, No Lead – (36-pin) 5x5 mm body (UQFN)
	PT	=	Thin Quad Flatpack – (48-pin) 7x7 mm body (TQFP)
	M4	=	Ultra Thin Plastic Quad Flat, No Lead – (48-pin) 6x6 mm body (UQFN)
	PT	=	Plastic Thin Quad Flatpack – (64-pin) 10x10 mm body (TQFP)
	MR	=	Plastic Quad Flat, No Lead – (64-pin) 9x9 mm body (QFN)
	PT	=	Plastic Thin Quad Flatpack – (80-pin) 12x12 mm body (TQFP)

Examples:

dsPIC33CH128MP506-I/PT:
dsPIC33, Enhanced Performance, 128-Kbyte Program Memory, SMPS, 64-Pin, Industrial Temperature, TQFP Package.

NOTES:

© 2017-2018 Microchip Technology Inc.

Note the following details of the code protection feature on Microchip devices:

- Microchip products meet the specification contained in their particular Microchip Data Sheet.
- Microchip believes that its family of products is one of the most secure families of its kind on the market today, when used in the intended manner and under normal conditions.
- There are dishonest and possibly illegal methods used to breach the code protection feature. All of these methods, to our knowledge, require using the Microchip products in a manner outside the operating specifications contained in Microchip's Data Sheets. Most likely, the person doing so is engaged in theft of intellectual property.
- Microchip is willing to work with the customer who is concerned about the integrity of their code.
- Neither Microchip nor any other semiconductor manufacturer can guarantee the security of their code. Code protection does not mean that we are guaranteeing the product as "unbreakable."

Code protection is constantly evolving. We at Microchip are committed to continuously improving the code protection features of our products. Attempts to break Microchip's code protection feature may be a violation of the Digital Millennium Copyright Act. If such acts allow unauthorized access to your software or other copyrighted work, you may have a right to sue for relief under that Act.

Information contained in this publication regarding device applications and the like is provided only for your convenience and may be superseded by updates. It is your responsibility to ensure that your application meets with your specifications. MICROCHIP MAKES NO REPRESENTATIONS OR WARRANTIES OF ANY KIND WHETHER EXPRESS OR IMPLIED, WRITTEN OR ORAL, STATUTORY OR OTHERWISE, RELATED TO THE INFORMATION, INCLUDING BUT NOT LIMITED TO ITS CONDITION, QUALITY, PERFORMANCE, MERCHANTABILITY OR FITNESS FOR PURPOSE**.** Microchip disclaims all liability arising from this information and its use. Use of Microchip devices in life support and/or safety applications is entirely at the buyer's risk, and the buyer agrees to defend, indemnify and hold harmless Microchip from any and all damages, claims, suits, or expenses resulting from such use. No licenses are conveyed, implicitly or otherwise, under any Microchip intellectual property rights unless otherwise stated.

Microchip received ISO/TS-16949:2009 certification for its worldwide headquarters, design and wafer fabrication facilities in Chandler and Tempe, Arizona; Gresham, Oregon and design centers in California and India. The Company's quality system processes and procedures are for its PIC® MCUs and dsPIC® DSCs, KEELOQ® code hopping devices, Serial EEPROMs, microperipherals, nonvolatile memory and analog products. In addition, Microchip's quality system for the design and manufacture of development systems is ISO 9001:2000 certified.

QUALITY MANAGEMENT SYSTEM
CERTIFIED BY DNV
═ ISO/TS 16949 ═

Trademarks

The Microchip name and logo, the Microchip logo, AnyRate, AVR, AVR logo, AVR Freaks, BeaconThings, BitCloud, CryptoMemory, CryptoRF, dsPIC, FlashFlex, flexPWR, Heldo, JukeBlox, KEELOQ, KEELOQ logo, Kleer, LANCheck, LINK MD, maXStylus, maXTouch, MediaLB, megaAVR, MOST, MOST logo, MPLAB, OptoLyzer, PIC, picoPower, PICSTART, PIC32 logo, Prochip Designer, QTouch, RightTouch, SAM-BA, SpyNIC, SST, SST Logo, SuperFlash, tinyAVR, UNI/O, and XMEGA are registered trademarks of Microchip Technology Incorporated in the U.S.A. and other countries.

ClockWorks, The Embedded Control Solutions Company, EtherSynch, Hyper Speed Control, HyperLight Load, IntelliMOS, mTouch, Precision Edge, and Quiet-Wire are registered trademarks of Microchip Technology Incorporated in the U.S.A.

Adjacent Key Suppression, AKS, Analog-for-the-Digital Age, Any Capacitor, AnyIn, AnyOut, BodyCom, chipKIT, chipKIT logo, CodeGuard, CryptoAuthentication, CryptoCompanion, CryptoController, dsPICDEM, dsPICDEM.net, Dynamic Average Matching, DAM, ECAN, EtherGREEN, In-Circuit Serial Programming, ICSP, Inter-Chip Connectivity, JitterBlocker, KleerNet, KleerNet logo, Mindi, MiWi, motorBench, MPASM, MPF, MPLAB Certified logo, MPLIB, MPLINK, MultiTRAK, NetDetach, Omniscient Code Generation, PICDEM, PICDEM.net, PICkit, PICtail, PureSilicon, QMatrix, RightTouch logo, REAL ICE, Ripple Blocker, SAM-ICE, Serial Quad I/O, SMART-I.S., SQI, SuperSwitcher, SuperSwitcher II, Total Endurance, TSHARC, USBCheck, VariSense, ViewSpan, WiperLock, Wireless DNA, and ZENA are trademarks of Microchip Technology Incorporated in the U.S.A. and other countries.

SQTP is a service mark of Microchip Technology Incorporated in the U.S.A.

Silicon Storage Technology is a registered trademark of Microchip Technology Inc. in other countries.

GestIC is a registered trademark of Microchip Technology Germany II GmbH & Co. KG, a subsidiary of Microchip Technology Inc., in other countries.

All other trademarks mentioned herein are property of their respective companies.

© 2017-2018, Microchip Technology Incorporated, All Rights Reserved.

ISBN: 978-1-5224-3175-6

Worldwide Sales and Service

AMERICAS

Corporate Office
2355 West Chandler Blvd.
Chandler, AZ 85224-6199
Tel: 480-792-7200
Fax: 480-792-7277
Technical Support:
http://www.microchip.com/support
Web Address:
www.microchip.com

Atlanta
Duluth, GA
Tel: 678-957-9614
Fax: 678-957-1455

Austin, TX
Tel: 512-257-3370

Boston
Westborough, MA
Tel: 774-760-0087
Fax: 774-760-0088

Chicago
Itasca, IL
Tel: 630-285-0071
Fax: 630-285-0075

Dallas
Addison, TX
Tel: 972-818-7423
Fax: 972-818-2924

Detroit
Novi, MI
Tel: 248-848-4000

Houston, TX
Tel: 281-894-5983

Indianapolis
Noblesville, IN
Tel: 317-773-8323
Fax: 317-773-5453
Tel: 317-536-2380

Los Angeles
Mission Viejo, CA
Tel: 949-462-9523
Fax: 949-462-9608
Tel: 951-273-7800

Raleigh, NC
Tel: 919-844-7510

New York, NY
Tel: 631-435-6000

San Jose, CA
Tel: 408-735-9110
Tel: 408-436-4270

Canada - Toronto
Tel: 905-695-1980
Fax: 905-695-2078

ASIA/PACIFIC

Australia - Sydney
Tel: 61-2-9868-6733

China - Beijing
Tel: 86-10-8569-7000

China - Chengdu
Tel: 86-28-8665-5511

China - Chongqing
Tel: 86-23-8980-9588

China - Dongguan
Tel: 86-769-8702-9880

China - Guangzhou
Tel: 86-20-8755-8029

China - Hangzhou
Tel: 86-571-8792-8115

China - Hong Kong SAR
Tel: 852-2943-5100

China - Nanjing
Tel: 86-25-8473-2460

China - Qingdao
Tel: 86-532-8502-7355

China - Shanghai
Tel: 86-21-3326-8000

China - Shenyang
Tel: 86-24-2334-2829

China - Shenzhen
Tel: 86-755-8864-2200

China - Suzhou
Tel: 86-186-6233-1526

China - Wuhan
Tel: 86-27-5980-5300

China - Xian
Tel: 86-29-8833-7252

China - Xiamen
Tel: 86-592-2388138

China - Zhuhai
Tel: 86-756-3210040

ASIA/PACIFIC

India - Bangalore
Tel: 91-80-3090-4444

India - New Delhi
Tel: 91-11-4160-8631

India - Pune
Tel: 91-20-4121-0141

Japan - Osaka
Tel: 81-6-6152-7160

Japan - Tokyo
Tel: 81-3-6880- 3770

Korea - Daegu
Tel: 82-53-744-4301

Korea - Seoul
Tel: 82-2-554-7200

Malaysia - Kuala Lumpur
Tel: 60-3-7651-7906

Malaysia - Penang
Tel: 60-4-227-8870

Philippines - Manila
Tel: 63-2-634-9065

Singapore
Tel: 65-6334-8870

Taiwan - Hsin Chu
Tel: 886-3-577-8366

Taiwan - Kaohsiung
Tel: 886-7-213-7830

Taiwan - Taipei
Tel: 886-2-2508-8600

Thailand - Bangkok
Tel: 66-2-694-1351

Vietnam - Ho Chi Minh
Tel: 84-28-5448-2100

EUROPE

Austria - Wels
Tel: 43-7242-2244-39
Fax: 43-7242-2244-393

Denmark - Copenhagen
Tel: 45-4450-2828
Fax: 45-4485-2829

Finland - Espoo
Tel: 358-9-4520-820

France - Paris
Tel: 33-1-69-53-63-20
Fax: 33-1-69-30-90-79

Germany - Garching
Tel: 49-8931-9700

Germany - Haan
Tel: 49-2129-3766400

Germany - Heilbronn
Tel: 49-7131-67-3636

Germany - Karlsruhe
Tel: 49-721-625370

Germany - Munich
Tel: 49-89-627-144-0
Fax: 49-89-627-144-44

Germany - Rosenheim
Tel: 49-8031-354-560

Israel - Ra'anana
Tel: 972-9-744-7705

Italy - Milan
Tel: 39-0331-742611
Fax: 39-0331-466781

Italy - Padova
Tel: 39-049-7625286

Netherlands - Drunen
Tel: 31-416-690399
Fax: 31-416-690340

Norway - Trondheim
Tel: 47-7289-7561

Poland - Warsaw
Tel: 48-22-3325737

Romania - Bucharest
Tel: 40-21-407-87-50

Spain - Madrid
Tel: 34-91-708-08-90
Fax: 34-91-708-08-91

Sweden - Gothenberg
Tel: 46-31-704-60-40

Sweden - Stockholm
Tel: 46-8-5090-4654

UK - Wokingham
Tel: 44-118-921-5800
Fax: 44-118-921-5820

© 2017-2018 Microchip Technology Inc.

Mouser Electronics

Authorized Distributor

Click to View Pricing, Inventory, Delivery & Lifecycle Information:

Microchip:

dsPIC33CH64MP503T-I/M5 dsPIC33CH64MP205-I/PT dsPIC33CH64MP205T-I/M4 dsPIC33CH128MP506T-I/PT dsPIC33CH64MP206-E/PT dsPIC33CH64MP508T-I/PT dsPIC33CH128MP503T-I/M5 dsPIC33CH64MP502-I/SS dsPIC33CH64MP205-I/M4 dsPIC33CH128MP205T-I/PT dsPIC33CH128MP205-E/PT dsPIC33CH128MP205-I/M4 dsPIC33CH128MP508-E/PT dsPIC33CH64MP206-I/PT dsPIC33CH128MP208T-I/PT dsPIC33CH64MP505-I/PT dsPIC33CH128MP502-E/SS dsPIC33CH64MP506T-I/MR dsPIC33CH64MP208T-I/PT dsPIC33CH64MP505T-I/M4 dsPIC33CH64MP506-I/PT dsPIC33CH64MP502-I/2N dsPIC33CH128MP503-I/M5 dsPIC33CH64MP206-I/MR dsPIC33CH128MP505-E/PT dsPIC33CH64MP202-E/2N dsPIC33CH64MP206T-I/PT dsPIC33CH64MP502T-I/SS dsPIC33CH64MP508-I/PT dsPIC33CH64MP205T-I/PT dsPIC33CH128MP502-I/SS dsPIC33CH128MP502T-I/2N dsPIC33CH64MP208-I/PT dsPIC33CH64MP203-E/M5 dsPIC33CH128MP202T-I/SS dsPIC33CH64MP506-E/PT dsPIC33CH128MP208-I/PT dsPIC33CH128MP202-I/2N dsPIC33CH128MP505T-I/PT dsPIC33CH64MP202T-I/2N dsPIC33CH64MP202T-I/SS dsPIC33CH64MP202-I/SS dsPIC33CH128MP203T-I/M5 dsPIC33CH128MP506-I/PT dsPIC33CH64MP502-E/2N dsPIC33CH128MP505T-I/M4 dsPIC33CH128MP505-I/PT dsPIC33CH128MP206T-I/MR dsPIC33CH128MP202T-I/2N dsPIC33CH64MP203-I/M5 dsPIC33CH128MP206-E/PT dsPIC33CH64MP508-E/PT dsPIC33CH64MP502T-I/2N dsPIC33CH64MP203T-I/M5 dsPIC33CH64MP206T-I/MR dsPIC33CH128MP505-E/M4 dsPIC33CH64MP503-E/M5 dsPIC33CH64MP503-I/M5 dsPIC33CH128MP205T-I/M4 dsPIC33CH128MP508T-I/PT dsPIC33CH128MP202-E/2N dsPIC33CH128MP206-I/PT dsPIC33CH128MP202-E/SS dsPIC33CH64MP205-E/PT dsPIC33CH128MP206-E/MR dsPIC33CH128MP502T-I/SS dsPIC33CH128MP508-I/PT dsPIC33CH64MP206-E/MR dsPIC33CH128MP506-E/MR dsPIC33CH128MP502-I/2N dsPIC33CH64MP202-E/SS dsPIC33CH64MP506T-I/PT dsPIC33CH64MP505-I/M4 dsPIC33CH128MP206-I/MR dsPIC33CH64MP208-E/PT dsPIC33CH64MP506-I/MR dsPIC33CH128MP206T-I/PT dsPIC33CH64MP506-E/MR dsPIC33CH128MP208-E/PT dsPIC33CH128MP505-I/M4 dsPIC33CH128MP506-E/PT dsPIC33CH128MP502-E/2N dsPIC33CH64MP505-E/M4 dsPIC33CH128MP202-I/SS dsPIC33CH64MP505T-I/PT dsPIC33CH128MP203-I/M5 dsPIC33CH64MP502-E/SS dsPIC33CH64MP202-I/2N dsPIC33CH128MP205-I/PT dsPIC33CH128MP503-E/M5 dsPIC33CH128MP203-E/M5 dsPIC33CH128MP205-E/M4 dsPIC33CH64MP205-E/M4 dsPIC33CH128MP506T-I/MR dsPIC33CH128MP506-I/MR dsPIC33CH64MP505-E/PT dsPIC33CH256MP206-E/MR dsPIC33CH512MP206-I/PT dsPIC33CH512MP206T-I/PT dsPIC33CH512MP508T-I/PT

OCEAN CHIPS
Океан Электроники
Поставка электронных компонентов

Компания «Океан Электроники» предлагает заключение долгосрочных отношений при поставках импортных электронных компонентов на взаимовыгодных условиях!

Наши преимущества:

- Поставка оригинальных импортных электронных компонентов напрямую с производств Америки, Европы и Азии, а так же с крупнейших складов мира;
- Широкая линейка поставок активных и пассивных импортных электронных компонентов (более 30 млн. наименований);
- Поставка сложных, дефицитных, либо снятых с производства позиций;
- Оперативные сроки поставки под заказ (от 5 рабочих дней);
- Экспресс доставка в любую точку России;
- Помощь Конструкторского Отдела и консультации квалифицированных инженеров;
- Техническая поддержка проекта, помощь в подборе аналогов, поставка прототипов;
- Поставка электронных компонентов под контролем ВП;
- Система менеджмента качества сертифицирована по Международному стандарту ISO 9001;
- При необходимости вся продукция военного и аэрокосмического назначения проходит испытания и сертификацию в лаборатории (по согласованию с заказчиком);
- Поставка специализированных компонентов военного и аэрокосмического уровня качества (Xilinx, Altera, Analog Devices, Intersil, Interpoint, Microsemi, Actel, Aeroflex, Peregrine, VPT, Syfer, Eurofarad, Texas Instruments, MS Kennedy, Miteq, Cobham, E2V, MA-COM, Hittite, Mini-Circuits, General Dynamics и др.);

Компания «Океан Электроники» является официальным дистрибьютором и эксклюзивным представителем в России одного из крупнейших производителей разъемов военного и аэрокосмического назначения **«JONHON»**, а так же официальным дистрибьютором и эксклюзивным представителем в России производителя высокотехнологичных и надежных решений для передачи СВЧ сигналов **«FORSTAR»**.

AVIC JONHON

«JONHON» (основан в 1970 г.)

Разъемы специального, военного и аэрокосмического назначения:

(Применяются в военной, авиационной, аэрокосмической, морской, железнодорожной, горно- и нефтедобывающей отраслях промышленности)

«FORSTAR» (основан в 1998 г.)

ВЧ соединители, коаксиальные кабели, кабельные сборки и микроволновые компоненты:

(Применяются в телекоммуникациях гражданского и специального назначения, в средствах связи, РЛС, а так же военной, авиационной и аэрокосмической отраслях промышленности).

FORSTAR®

Телефон: 8 (812) 309-75-97 (многоканальный)
Факс: 8 (812) 320-03-32
Электронная почта: ocean@oceanchips.ru
Web: http://oceanchips.ru/
Адрес: 198099, г. Санкт-Петербург, ул. Калинина, д. 2, корп. 4, лит. А