CUI INC®

SERIES: CFM-120 | **DESCRIPTION:** DC AXIAL FAN

FEATURES

- 120 x 120 mm frame
- high fan speed for greater air flow
- dual ball bearing construction
- auto restart protection standard on all models

MODEL	input voltage		input current		input power	rated speed	air flow[1]	static pressure[2]	noise
	rated (Vdc)	range (Vdc)	typ (A)	max (A)	max (W)	typ (RPM)	(CFM)	(inch H_2O)	max (dBA)
CFM-A225-13	12	6~13.8	0.59	0.79	9.48	4,100	126.89	0.49	53.5
CFM-A225-23	24	16~27.6	0.31	0.39	9.36	4,100	126.89	0.49	53.5
CFM-A225-43	48	30~55.2	0.17	0.23	11.04	4,100	126.89	0.49	53.5
CFM-A238-13	12	6~13.8	1.40	1.75	21	4,600	200.9	0.78	61.5
CFM-A238-23	24	16~27.6	0.77	0.88	21.12	4,600	200.9	0.78	61.5
CFM-A238-43	48	30~55.2	0.36	0.48	23.04	4,600	200.9	0.78	61.5

Notes: 1. At 0 inch H_20 static pressure.
2. At 0 CFM airflow.

PART NUMBER KEY

CFM-A2XX-X3-XX-CXX

- Base Number
- Depth
  25 = 25 mm
  38 = 38 mm
- Input Voltage
  1 = 12 Vdc
  2 = 24 Vdc
  4 = 48 Vdc
- Fan Signals
  10 = no signals
  11 = rotation detector signal
  20 = tachometer signal
  22 = tachometer signal / PWM control signal
- Reserved for Custom Configurations

INPUT

parameter	conditions/description	min	typ	max	units
operating input voltage	12 Vdc input models 24 Vdc input models 48 Vdc input models	6 16 30	12 24 48	13.8 27.6 55.2	Vdc Vdc Vdc
current	CFM-A225-13 CFM-A225-23 CFM-A225-43 CFM-A238-13 CFM-A238-23 CFM-A238-43		0.59 0.31 0.17 1.40 0.77 0.36	0.79 0.39 0.23 1.75 0.88 0.48	A A A A A A
power	CFM-A225-13 CFM-A225-23 CFM-A225-43 CFM-A238-13 CFM-A238-23 CFM-A238-43		7.08 7.44 8.16 16.80 18.48 17.28	9.48 9.36 11.04 21 21.12 23.04	W W W W W W
starting voltage	at 25°C 12 Vdc input models 24 Vdc input models 48 Vdc input models		 6 12 24		 Vdc Vdc Vdc

PERFORMANCE

parameter	conditions/description	min	typ	max	units
rated speed	at 25°C, after 10 minutes CFM-A225 models CFM-A238 models	 3,690 4,140	 4,100 4,600	 4,510 5,060	 RPM RPM
air flow	at 0 inch H_2O, see performance curves CFM-A225 models CFM-A238 models		 126.89 200.9		 CFM CFM
static pressure	at 0 CFM, see performance curves CFM-A225 models CFM-A238 models		 0.49 0.78		 inch H_2O inch H_2O
noise	at 1 m CFM-A225 models CFM-A238 models		 51.5 59.5	 53.5 61.5	 dBA dBA

PROTECTIONS / SIGNALS[1]

parameter	conditions/description	min	typ	max	units
auto restart protection	available on all models				
rotation detector	available on "11" models				
tachometer signal	available on "20" and "22" models				
PWM control signal	available on "22" models				

Notes: 1. See application notes for details.

SAFETY & COMPLIANCE

parameter	conditions/description	min	typ	max	units
insulation resistance of frame	at 500 Vdc between frame and positive terminal	10			MΩ
dielectric strength	at 500 Vac, 60 Hz, 1 minute between frame and positive terminal			5	mA
safety approvals	UL/cUL 507, TUV (EN 62368-1)				
EMI/EMC	EN 55022:2010+AC:2011 Class B, EN 61000-3-2:2014, EN 61000-3-3:2013, EN 55024:2010				
life expectancy	at 45°C, 15~65% RH		70,000		hours
RoHS	yes				

ENVIRONMENTAL

parameter	conditions/description	min	typ	max	units
operating temperature		-10		70	°C
storage temperature		-40		70	°C
operating humidity	non-condensing	5		90	%
storage humidity	non-condensing	5		95	%

PERFORMANCE CURVES

CFM-A225

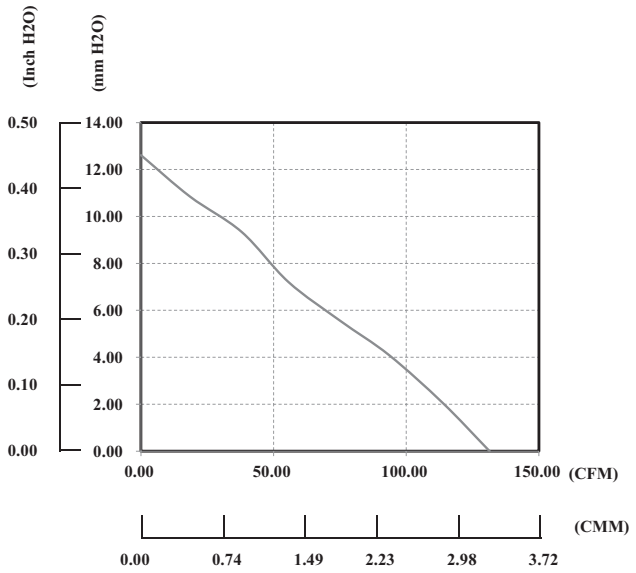

CFM-A238

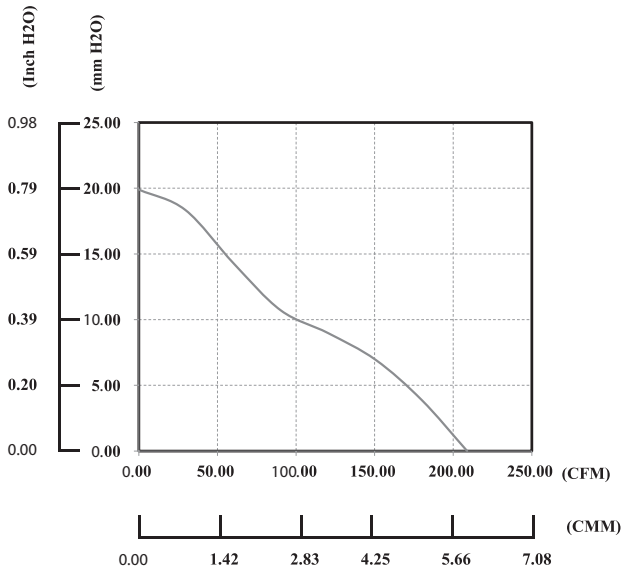

MECHANICAL

parameter	conditions/description	min	typ	max	units
motor	4 pole DC brushless				
bearing system	ball bearing				
direction of rotation	counter-clockwise viewed from front of fan blade				
dimensions	CFM-A225 models 120 x 120 x 25.4 CFM-A238 models 120 x 120 x 38				mm mm
material	PBT (UL94V-0)				
weight	CFM-A225-13 CFM-A225-23 CFM-A225-43 CFM-A238-13 CFM-A238-23 CFM-A238-43		190.0 189.8 190.6 297.0 283.7 283.2		g g g g g g

MECHANICAL DRAWING

units: mm [inch]

CFM-A225

wire: UL 1007, 24 AWG

WIRE CONNECTIONS	
Wire Color	Function
Red	+Vin
Black	-Vin
Yellow[1]	FG Signal
White[1]	RD Signal
Blue[1]	PWM

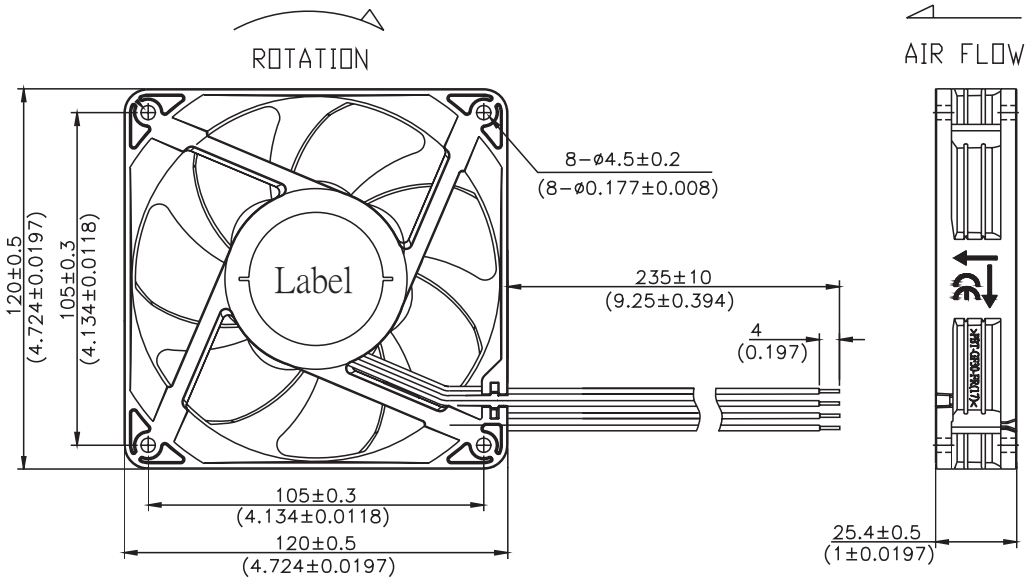

CFM-A238

wire: UL 1007, 24 AWG

WIRE CONNECTIONS	
Wire Color	Function
Red	+Vin
Black	-Vin
Yellow[1]	FG Signal
White[1]	RD Signal
Blue[1]	PWM

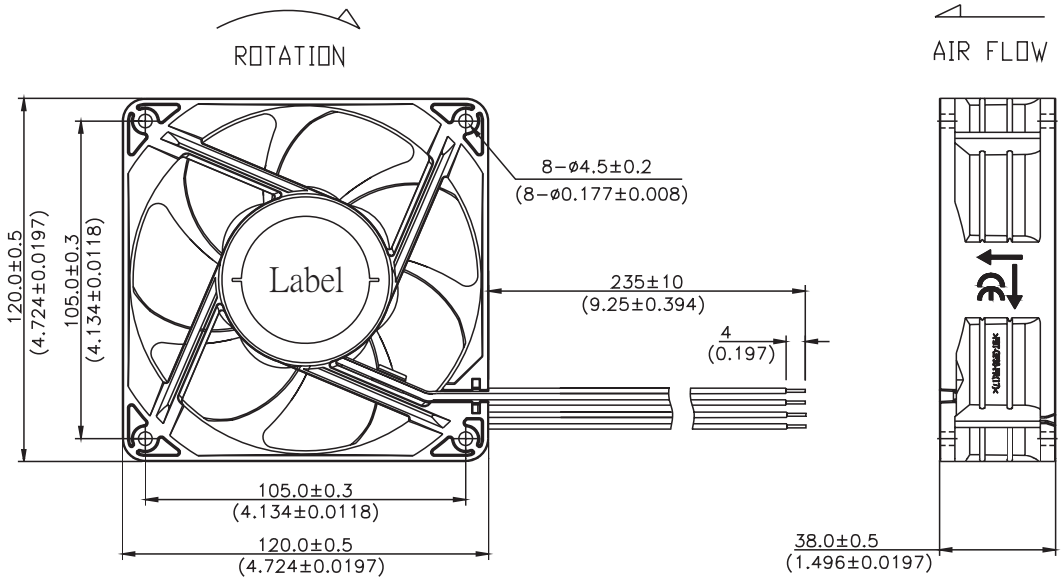

Note: 1. Wires only present on versions with output signals.

APPLICATION NOTES

Auto Restart Protection/Current Limit Protection

When the fan motor is locked, the device will cut off the drive current within two to six seconds and restart automatically after a few seconds. If the lock situation is continued, the device will work on a repeated cycle of cut-off and restart until the lock is released. (See Figure 1 below).

Figure 1 Current Limit Protection

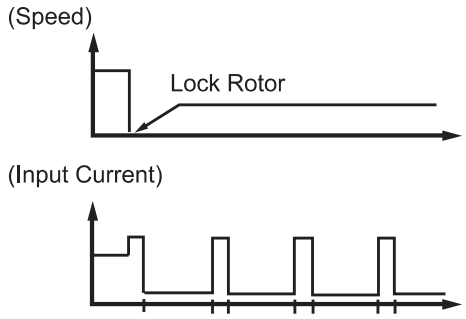

Lock Sensor/Rotation Detector

Lock Sensor is used to detect if the fan motor is operating or stopped. Alarm High: the output will be logical low when fan is operating and be logical high when fan motor is locked. (See Figures 2~3 below).

Figure 2 Alarm High Output Waveform

Figure 3 RD Signal Output Circuit: Open Collector

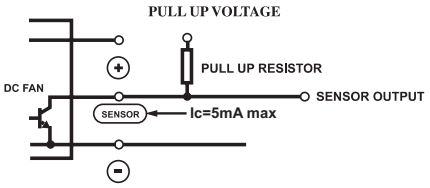

Pulse Sensor/Tachometer Signal/FG

Pulse Sensor is for detecting the rotational speed of the fan motor. At locked rotor condition, the signal stops cycling and the output is fixed at VoH or VoL (See Figures 4~5 below).

Figure 4 Output Waveform

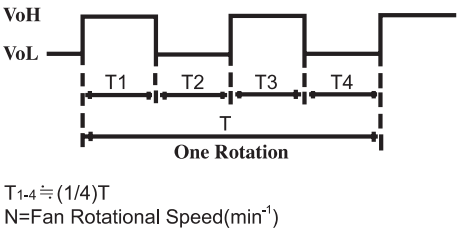

Figure 5 FG Signal Output Circuit: Open Collector

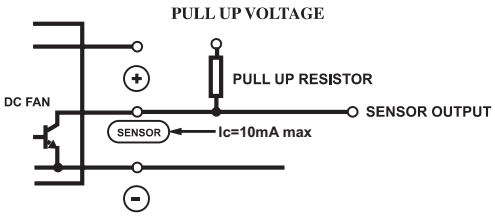

PMW Control Signal

A speed control lead can be provided that will accept a PWM signal from the customer circuit to vary the speed of the fan. The change in speed is linear by changing the Duty-Cycle of the PWM. Open collector type and pull-up voltage is changed by maximum operating voltage and sink current by consuming current. (See Figure 6 below).

Figure 6 Duty Cycle

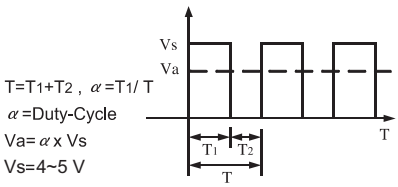

REVISION HISTORY

rev.	description	date
1.0	initial release	08/15/2016
1.01	updated datasheet	07/27/2017
1.02	updated to be certified to EN 62368-1 safety standard	07/09/2019

The revision history provided is for informational purposes only and is believed to be accurate.

CUI INC®

Headquarters
20050 SW 112th Ave.
Tualatin, OR 97062
800.275.4899

Fax 503.612.2383
cui.com
techsupport@cui.com

CUI offers a one (1) year limited warranty. Complete warranty information is listed on our website.

CUI reserves the right to make changes to the product at any time without notice. Information provided by CUI is believed to be accurate and reliable. However, no responsibility is assumed by CUI for its use, nor for any infringements of patents or other rights of third parties which may result from its use.

CUI products are not authorized or warranted for use as critical components in equipment that requires an extremely high level of reliability. A critical component is any component of a life support device or system whose failure to perform can be reasonably expected to cause the failure of the life support device or system, or to affect its safety or effectiveness.

OCEAN CHIPS
Океан Электроники
Поставка электронных компонентов

Компания «Океан Электроники» предлагает заключение долгосрочных отношений при поставках импортных электронных компонентов на взаимовыгодных условиях!

Наши преимущества:

- Поставка оригинальных импортных электронных компонентов напрямую с производств Америки, Европы и Азии, а так же с крупнейших складов мира;
- Широкая линейка поставок активных и пассивных импортных электронных компонентов (более 30 млн. наименований);
- Поставка сложных, дефицитных, либо снятых с производства позиций;
- Оперативные сроки поставки под заказ (от 5 рабочих дней);
- Экспресс доставка в любую точку России;
- Помощь Конструкторского Отдела и консультации квалифицированных инженеров;
- Техническая поддержка проекта, помощь в подборе аналогов, поставка прототипов;
- Поставка электронных компонентов под контролем ВП;
- Система менеджмента качества сертифицирована по Международному стандарту ISO 9001;
- При необходимости вся продукция военного и аэрокосмического назначения проходит испытания и сертификацию в лаборатории (по согласованию с заказчиком);
- Поставка специализированных компонентов военного и аэрокосмического уровня качества (Xilinx, Altera, Analog Devices, Intersil, Interpoint, Microsemi, Actel, Aeroflex, Peregrine, VPT, Syfer, Eurofarad, Texas Instruments, MS Kennedy, Miteq, Cobham, E2V, MA-COM, Hittite, Mini-Circuits, General Dynamics и др.);

Компания «Океан Электроники» является официальным дистрибьютором и эксклюзивным представителем в России одного из крупнейших производителей разъемов военного и аэрокосмического назначения **«JONHON»**, а так же официальным дистрибьютором и эксклюзивным представителем в России производителя высокотехнологичных и надежных решений для передачи СВЧ сигналов **«FORSTAR»**.

AVIC JONHON

«JONHON» (основан в 1970 г.)

Разъемы специального, военного и аэрокосмического назначения:

(Применяются в военной, авиационной, аэрокосмической, морской, железнодорожной, горно- и нефтедобывающей отраслях промышленности)

«FORSTAR» (основан в 1998 г.)

ВЧ соединители, коаксиальные кабели, кабельные сборки и микроволновые компоненты:

(Применяются в телекоммуникациях гражданского и специального назначения, в средствах связи, РЛС, а так же военной, авиационной и аэрокосмической отраслях промышленности).

FORSTAR®

Телефон: 8 (812) 309-75-97 (многоканальный)
Факс: 8 (812) 320-03-32
Электронная почта: ocean@oceanchips.ru
Web: http://oceanchips.ru/
Адрес: 198099, г. Санкт-Петербург, ул. Калинина, д. 2, корп. 4, лит. А