Inverter Grade Thyristors (Stud Version), 330 A

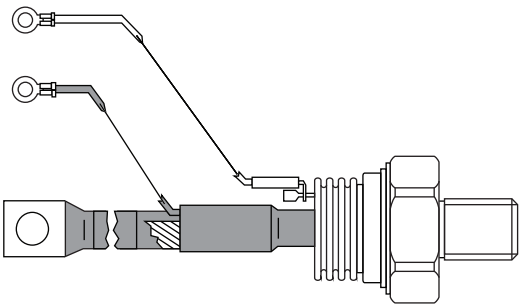

TO-209AE (TO-118)

FEATURES

- Center amplifying gate
- High surge current capability
- Low thermal impedance
- High speed performance
- Compression bonding
- Designed and qualified for industrial level
- Material categorization: For definitions of compliance please see www.vishay.com/doc?99912

Pb-free
RoHS COMPLIANT

TYPICAL APPLICATIONS

- Inverters
- Choppers
- Induction heating
- All types of force-commutated converters

PRODUCT SUMMARY	
$I_{T(AV)}$	330 A
V_{DRM}/V_{RRM}	400 V, 2000 V
V_{TM}	1.96 V
I_{TSM} at 50 Hz	11 000 A
I_{TSM} at 60 Hz	11 520 A
I_{GT}	200 mA
T_J	-40 °C to 125 °C
Package	TO-209AE (TO-118)
Diode variation	Single SCR

MAJOR RATINGS AND CHARACTERISTICS

PARAMETER	TEST CONDITIONS	VALUES	UNITS
$I_{T(AV)}$		330	A
	T_C	75	°C
$I_{T(RMS)}$		518	A
I_{TSM}	50 Hz	11 000	A
	60 Hz	11 520	A
I^2t	50 Hz	605	kA^2s
	60 Hz	550	kA^2s
V_{DRM}/V_{RRM}		400 to 800	V
t_q		15	µs
T_J		-40 to 125	°C

ELECTRICAL SPECIFICATIONS

VOLTAGE RATINGS

TYPE NUMBER	VOLTAGE CODE	V_{DRM}/V_{RRM}, MAXIMUM REPETITIVE PEAK VOLTAGE V	V_{RSM}, MAXIMUM NON-REPETITIVE PEAK VOLTAGE V	I_{DRM}/I_{RRM} MAXIMUM AT $T_J = T_J$ MAXIMUM mA
VS-ST333S	04	400	500	50
	08	800	900	

For technical questions within your region: DiodesAmericas@vishay.com, DiodesAsia@vishay.com, DiodesEurope@vishay.com
THIS DOCUMENT IS SUBJECT TO CHANGE WITHOUT NOTICE. THE PRODUCTS DESCRIBED HEREIN AND THIS DOCUMENT ARE SUBJECT TO SPECIFIC DISCLAIMERS, SET FORTH AT www.vishay.com/doc?91000

CURRENT CARRYING CAPABILITY

FREQUENCY	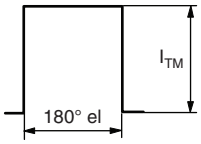		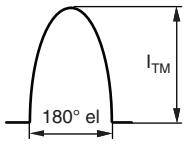		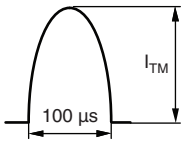		UNITS
50 Hz	840	600	1280	1040	5430	4350	A
400 Hz	650	450	1280	910	2150	1560	
1000 Hz	430	230	1090	730	1080	720	
2500 Hz	140	60	490	250	400	190	
Recovery voltage V_R	50		50		50		V
Voltage before turn-on V_D	V_{DRM}		V_{DRM}		V_{DRM}		
Rise of on-state current dI/dt	50		-		-		A/µs
Case temperature	50	75	50	75	50	75	°C
Equivalent values for RC circuit	10/0.47		10/0.47		10/0.47		Ω/µF

ON-STATE CONDUCTION

PARAMETER	SYMBOL	TEST CONDITIONS			VALUES	UNITS
Maximum average on-state current at case temperature	$I_{T(AV)}$	180° conduction, half sine wave			330	A
					75	°C
Maximum RMS on-state current	$I_{T(RMS)}$	DC at 63 °C case temperature			518	A
Maximum peak, one half cycle, non-repetitive surge current	I_{TSM}	t = 10 ms	No voltage reapplied	Sinusoidal half wave, initial $T_J = T_J$ maximum	11 000	
		t = 8.3 ms			11 520	
		t = 10 ms	100 % V_{RRM} reapplied		9250	
		t = 8.3 ms			9700	
Maximum I^2t for fusing	I^2t	t = 10 ms	No voltage reapplied		605	kA^2s
		t = 8.3 ms			550	
		t = 10 ms	100 % V_{RRM} reapplied		430	
		t = 8.3 ms			390	
Maximum $I^2\sqrt{t}$ for fusing	$I^2\sqrt{t}$	t = 0.1 ms to 10 ms, no voltage reapplied			6050	$kA^2\sqrt{s}$
Maximum peak on-state voltage	V_{TM}	I_{TM} = 1810 A, $T_J = T_J$ maximum, t_p = 10 ms sine wave pulse			1.96	V
Low level value of threshold voltage	$V_{T(TO)1}$	(16.7 % x π x $I_{T(AV)}$ < I < π x $I_{T(AV)}$), $T_J = T_J$ maximum			0.91	
High level value of threshold voltage	$V_{T(TO)2}$	(I > π x $I_{T(AV)}$), $T_J = T_J$ maximum			0.92	
Low level value of forward slope resistance	r_{t1}	(16.7 % x π x $I_{T(AV)}$ < I < π x $I_{T(AV)}$), $T_J = T_J$ maximum			0.58	mΩ
High level value of forward slope resistance	r_{t2}	(I > π x $I_{T(AV)}$), $T_J = T_J$ maximum			0.58	
Maximum holding current	I_H	T_J = 25 °C, I_T > 30 A			600	mA
Typical latching current	I_L	T_J = 25 °C, V_A = 12 V, R_a = 6 Ω, I_G = 1 A			1000	

SWITCHING

PARAMETER	SYMBOL	TEST CONDITIONS	VALUES	UNITS
Maximum non-repetitive rate of rise of turned-on current	dI/dt	$T_J = T_J$ maximum, V_{DRM} = Rated V_{DRM} I_{TM} = 2 x dI/dt	1000	A/µs
Typical delay time	t_d	T_J = 25 °C, V_{DM} = Rated V_{DRM}, I_{TM} = 50 A DC, t_p = 1 µs Resistive load, gate pulse: 10 V, 5 Ω source	1.0	µs
Maximum turn-off time	t_q	$T_J = T_J$ maximum, I_{TM} = 550 A, commutating dI/dt = 40 A/µs V_R = 50 V, t_p = 500 µs, dV/dt = 200 V/µs	15	

For technical questions within your region: DiodesAmericas@vishay.com, DiodesAsia@vishay.com, DiodesEurope@vishay.com
THIS DOCUMENT IS SUBJECT TO CHANGE WITHOUT NOTICE. THE PRODUCTS DESCRIBED HEREIN AND THIS DOCUMENT ARE SUBJECT TO SPECIFIC DISCLAIMERS, SET FORTH AT www.vishay.com/doc?91000

BLOCKING				
PARAMETER	SYMBOL	TEST CONDITIONS	VALUES	UNITS
Maximum critical rate of rise of off-state voltage	dV/dt	$T_J = T_J$ maximum, linear to 80 % V_{DRM}, higher value available on request	500	V/µs
Maximum peak reverse and off-state leakage current	I_{RRM}, I_{DRM}	$T_J = T_J$ maximum, rated V_{DRM}/V_{RRM} applied	50	mA

TRIGGERING				
PARAMETER	SYMBOL	TEST CONDITIONS	VALUES	UNITS
Maximum peak gate power	P_{GM}	$T_J = T_J$ maximum, f = 50 Hz, d% = 50	60	W
Maximum average gate power	$P_{G(AV)}$		10	
Maximum peak positive gate current	I_{GM}	$T_J = T_J$ maximum, $t_p \leq 5$ ms	10	A
Maximum peak positive gate voltage	$+V_{GM}$		20	V
Maximum peak negative gate voltage	$-V_{GM}$		5	
Maximum DC gate current required to trigger	I_{GT}	$T_J = 25$ °C, $V_A = 12$ V, $R_a = 6\ \Omega$	200	mA
Maximum DC gate voltage required to trigger	V_{GT}		3	V
Maximum DC gate current not to trigger	I_{GD}	$T_J = T_J$ maximum, rated V_{DRM} applied	20	mA
Maximum DC gate voltage not to trigger	V_{GD}		0.25	V

THERMAL AND MECHANICAL SPECIFICATIONS				
PARAMETER	SYMBOL	TEST CONDITIONS	VALUES	UNITS
Maximum operating junction temperature range	T_J		-40 to 125	°C
Maximum storage temperature range	T_{Stg}		-40 to 150	
Maximum thermal resistance, junction to case	R_{thJC}	DC operation	0.10	K/W
Maximum thermal resistance, case to heatsink	R_{thCS}	Mounting surface, smooth, flat and greased	0.03	
Mounting torque, ± 10 %		Non-lubricated threads	48.5 (425)	N · m (lbf · in)
Approximate weight			535	g
Case style		See dimensions - link at the end of datasheet	TO-209AE (TO-118)	

$\Delta R_{thJ\text{-}hs}$ CONDUCTION				
CONDUCTION ANGLE	SINUSOIDAL CONDUCTION	RECTANGULAR CONDUCTION	TEST CONDITIONS	UNITS
180°	0.011	0.008	$T_J = T_J$ maximum	K/W
120°	0.013	0.014		
90°	0.017	0.018		
60°	0.025	0.026		
30°	0.041	0.042		

Note

- The table above shows the increment of thermal resistance $R_{thJ\text{-}hs}$ when devices operate at different conduction angles than DC

For technical questions within your region: DiodesAmericas@vishay.com, DiodesAsia@vishay.com, DiodesEurope@vishay.com
THIS DOCUMENT IS SUBJECT TO CHANGE WITHOUT NOTICE. THE PRODUCTS DESCRIBED HEREIN AND THIS DOCUMENT ARE SUBJECT TO SPECIFIC DISCLAIMERS, SET FORTH AT www.vishay.com/doc?91000

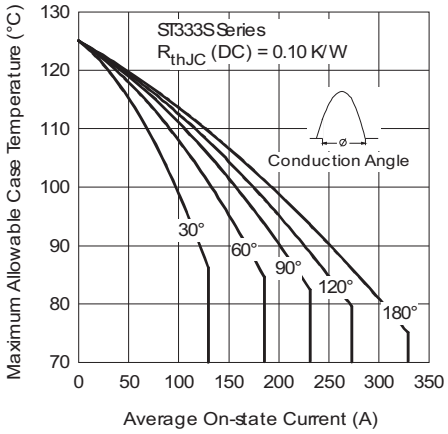

Fig. 1 - Current Ratings Characteristics

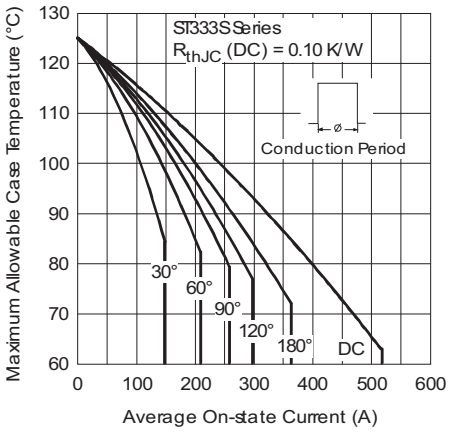

Fig. 2 - Current Ratings Characteristics

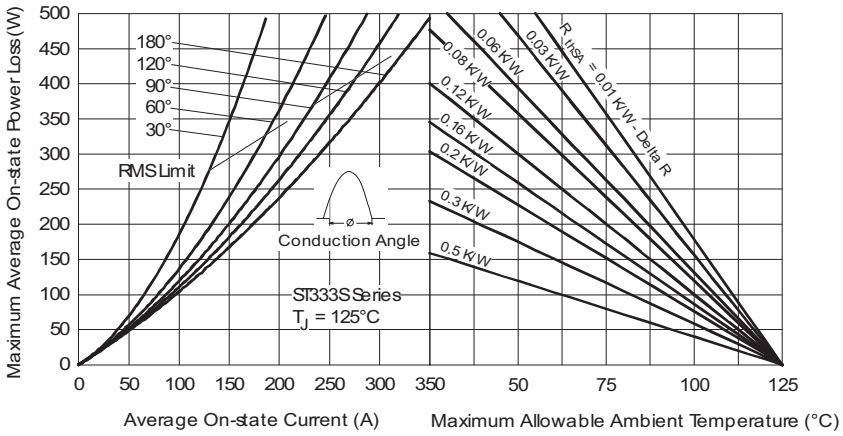

Fig. 3 - On-State Power Loss Characteristics

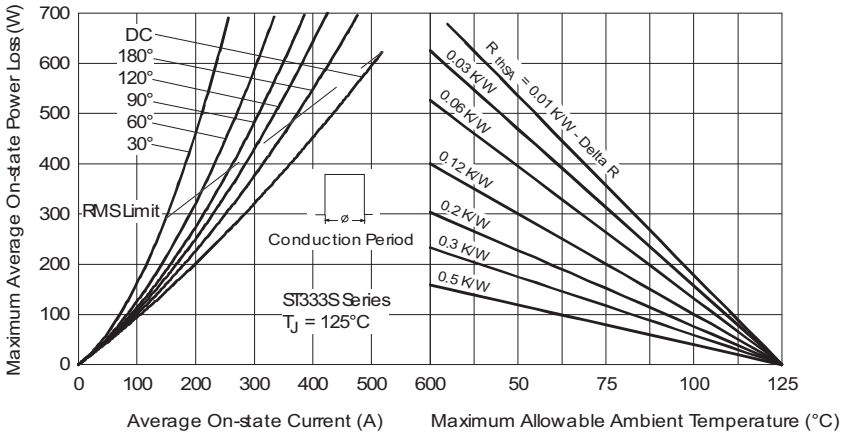

Fig. 4 - On-State Power Loss Characteristics

For technical questions within your region: DiodesAmericas@vishay.com, DiodesAsia@vishay.com, DiodesEurope@vishay.com
THIS DOCUMENT IS SUBJECT TO CHANGE WITHOUT NOTICE. THE PRODUCTS DESCRIBED HEREIN AND THIS DOCUMENT ARE SUBJECT TO SPECIFIC DISCLAIMERS, SET FORTH AT www.vishay.com/doc?91000

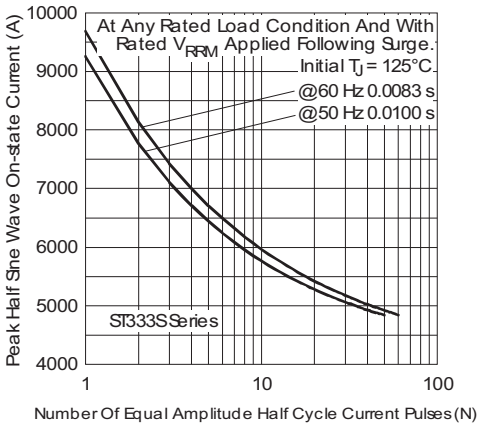

Fig. 5 - Maximum Non-Repetitive Surge Current

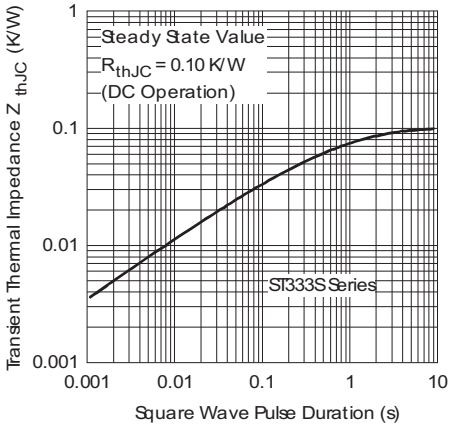

Fig. 8 - Thermal Impedance Z_{thJC} Characteristics

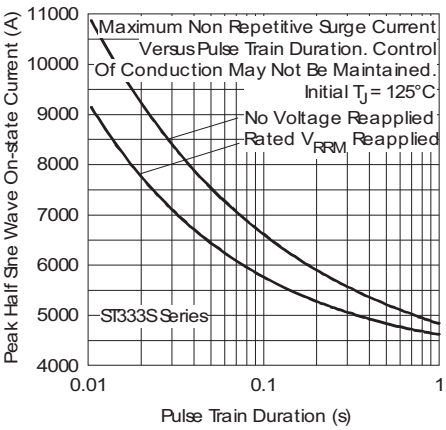

Fig. 6 - Maximum Non-Repetitive Surge Current

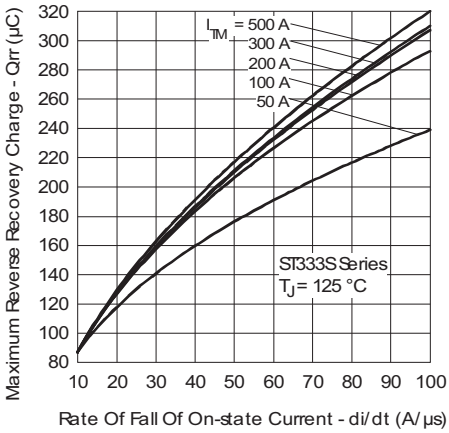

Fig. 9 - Reverse Recovered Charge Characteristics

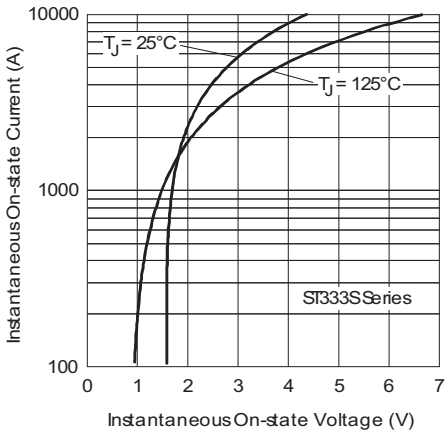

Fig. 7 - On-State Voltage Drop Characteristics

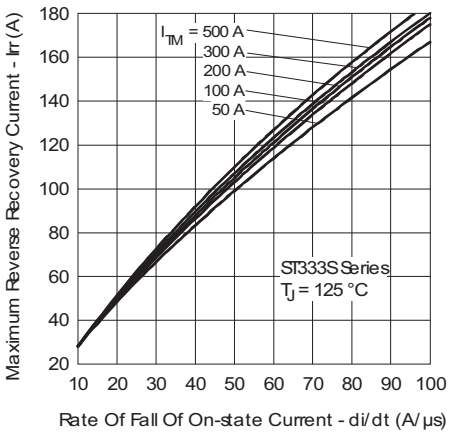

Fig. 10 - Reverse Recovery Current Characteristics

For technical questions within your region: DiodesAmericas@vishay.com, DiodesAsia@vishay.com, DiodesEurope@vishay.com
THIS DOCUMENT IS SUBJECT TO CHANGE WITHOUT NOTICE. THE PRODUCTS DESCRIBED HEREIN AND THIS DOCUMENT ARE SUBJECT TO SPECIFIC DISCLAIMERS, SET FORTH AT www.vishay.com/doc?91000

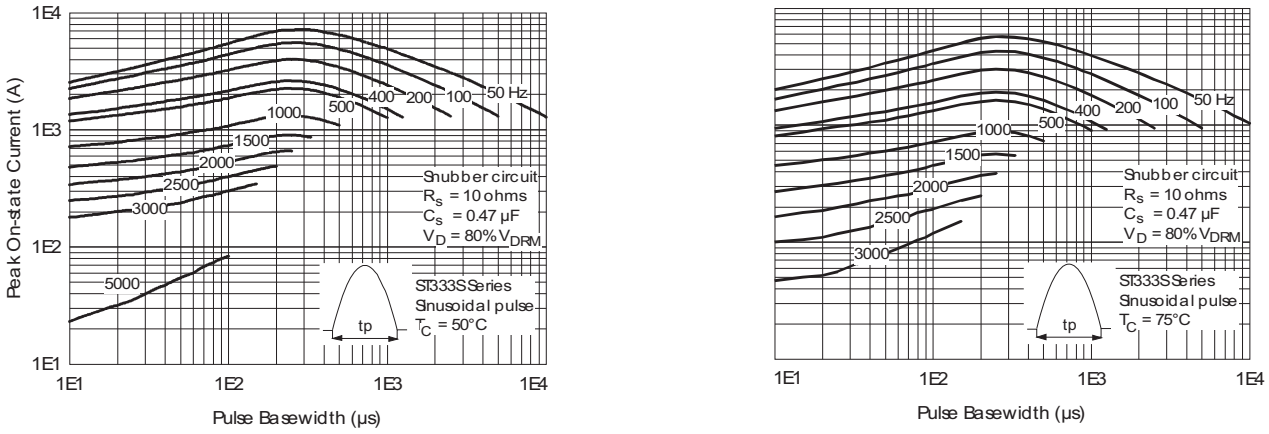

Fig. 11 - Frequency Characteristics

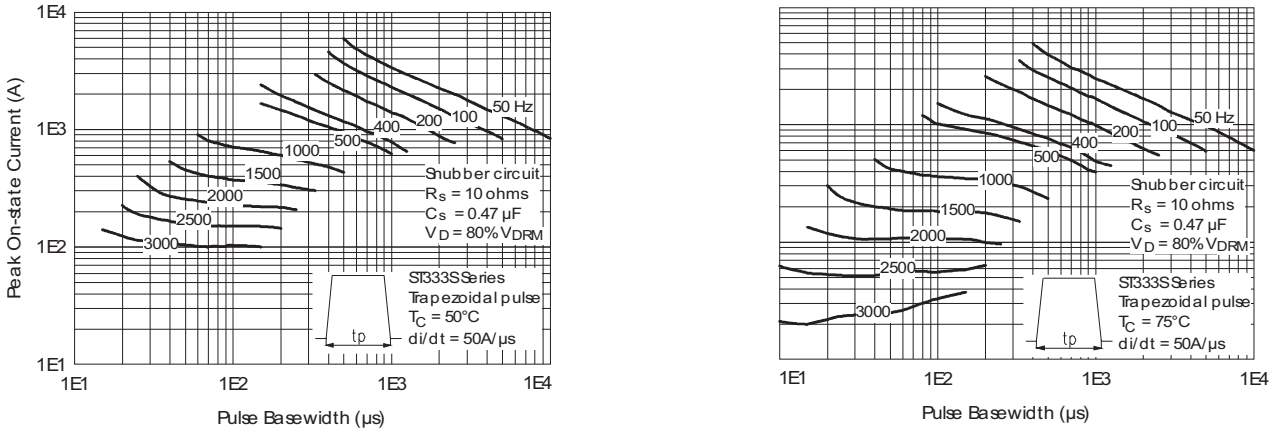

Fig. 12 - Frequency Characteristics

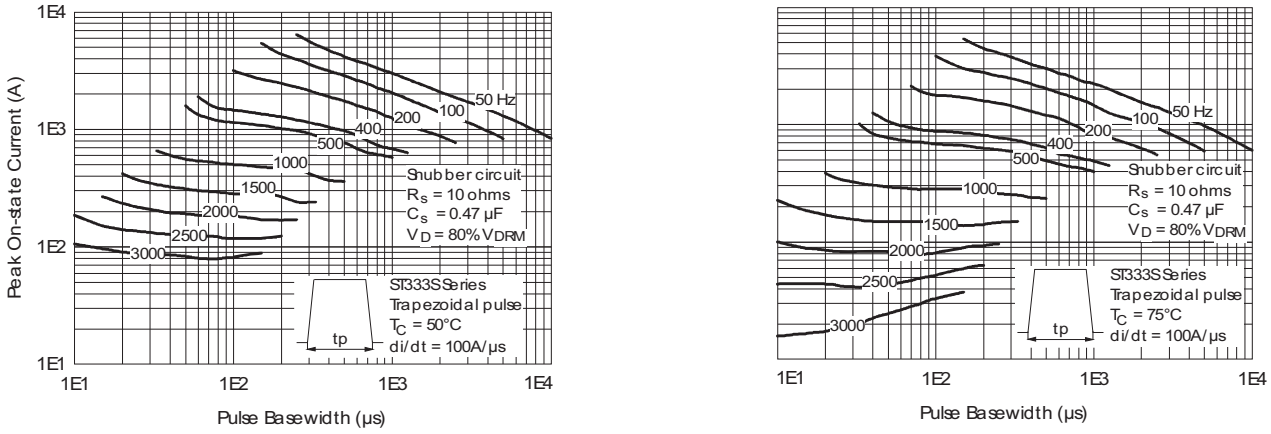

Fig. 13 - Frequency Characteristics

For technical questions within your region: DiodesAmericas@vishay.com, DiodesAsia@vishay.com, DiodesEurope@vishay.com
THIS DOCUMENT IS SUBJECT TO CHANGE WITHOUT NOTICE. THE PRODUCTS DESCRIBED HEREIN AND THIS DOCUMENT ARE SUBJECT TO SPECIFIC DISCLAIMERS, SET FORTH AT www.vishay.com/doc?91000

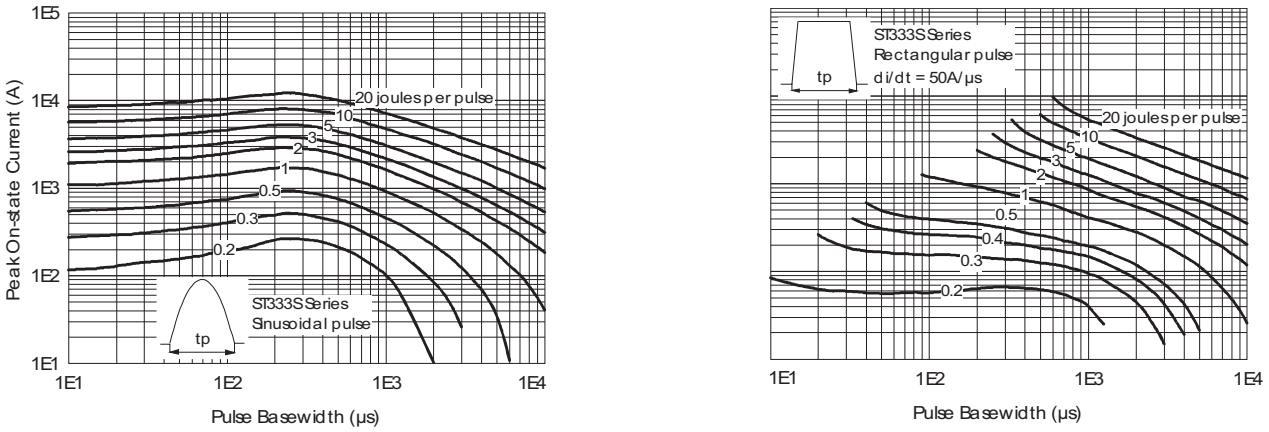

Fig. 14 - Maximum On-State Energy Power Loss Characteristics

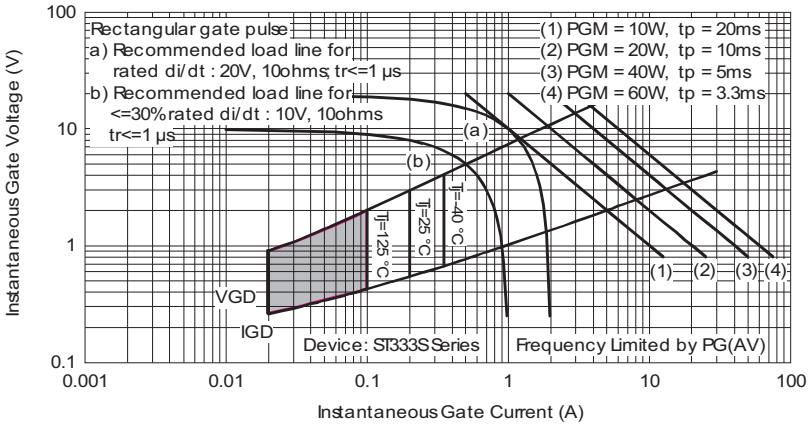

Fig. 15 - Gate Characteristics

For technical questions within your region: DiodesAmericas@vishay.com, DiodesAsia@vishay.com, DiodesEurope@vishay.com
THIS DOCUMENT IS SUBJECT TO CHANGE WITHOUT NOTICE. THE PRODUCTS DESCRIBED HEREIN AND THIS DOCUMENT ARE SUBJECT TO SPECIFIC DISCLAIMERS, SET FORTH AT www.vishay.com/doc?91000

ORDERING INFORMATION TABLE

Device code	VS-	ST	33	3	S	08	P	F	L	0	P
	1	2	3	4	5	6	7	8	9	10	11

1 - Vishay Semiconductors product
2 - Thyristor
3 - Essential part number
4 - 3 = Fast turn-off
5 - S = Compression bonding stud
6 - Voltage code x 100 = V_{RRM}
(see Voltage Ratings table)
7 - P = Stud base 3/4" 16UNF-2A
8 - Reapplied dV/dt code (for t_q test condition) F = 200 V/μs
9 - t_q code (L = 15 μs)
10 - 0 = Eyelet terminals
(gate and auxiliary cathode leads)
1 = Fast-on terminals
(gate and auxiliary cathode leads)
11 - None = Standard production
- P = Lead (Pb)-free

Note: For metric device M24 x 1.5 contact factory

LINKS TO RELATED DOCUMENTS	
Dimensions	www.vishay.com/doc?95080

For technical questions within your region: DiodesAmericas@vishay.com, DiodesAsia@vishay.com, DiodesEurope@vishay.com
THIS DOCUMENT IS SUBJECT TO CHANGE WITHOUT NOTICE. THE PRODUCTS DESCRIBED HEREIN AND THIS DOCUMENT ARE SUBJECT TO SPECIFIC DISCLAIMERS, SET FORTH AT www.vishay.com/doc?91000

TO-209AE (TO-118)

DIMENSIONS in millimeters (inches)

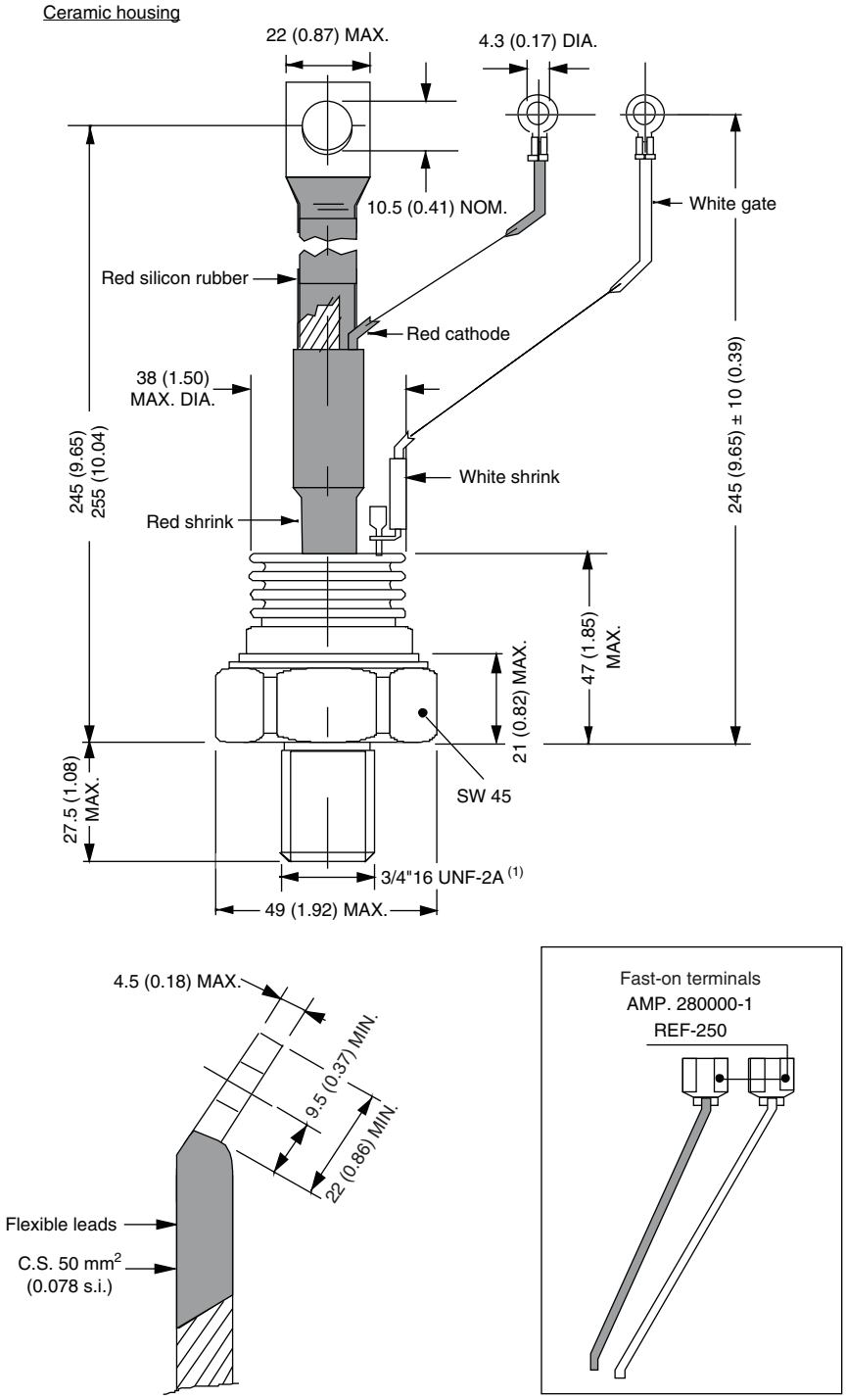

Note

(1) For metric device: M24 x 1.5 - length 21 (0.83) maximum

Disclaimer

ALL PRODUCT, PRODUCT SPECIFICATIONS AND DATA ARE SUBJECT TO CHANGE WITHOUT NOTICE TO IMPROVE RELIABILITY, FUNCTION OR DESIGN OR OTHERWISE.

Vishay Intertechnology, Inc., its affiliates, agents, and employees, and all persons acting on its or their behalf (collectively, "Vishay"), disclaim any and all liability for any errors, inaccuracies or incompleteness contained in any datasheet or in any other disclosure relating to any product.

Vishay makes no warranty, representation or guarantee regarding the suitability of the products for any particular purpose or the continuing production of any product. To the maximum extent permitted by applicable law, Vishay disclaims (i) any and all liability arising out of the application or use of any product, (ii) any and all liability, including without limitation special, consequential or incidental damages, and (iii) any and all implied warranties, including warranties of fitness for particular purpose, non-infringement and merchantability.

Statements regarding the suitability of products for certain types of applications are based on Vishay's knowledge of typical requirements that are often placed on Vishay products in generic applications. Such statements are not binding statements about the suitability of products for a particular application. It is the customer's responsibility to validate that a particular product with the properties described in the product specification is suitable for use in a particular application. Parameters provided in datasheets and/or specifications may vary in different applications and performance may vary over time. All operating parameters, including typical parameters, must be validated for each customer application by the customer's technical experts. Product specifications do not expand or otherwise modify Vishay's terms and conditions of purchase, including but not limited to the warranty expressed therein.

Except as expressly indicated in writing, Vishay products are not designed for use in medical, life-saving, or life-sustaining applications or for any other application in which the failure of the Vishay product could result in personal injury or death. Customers using or selling Vishay products not expressly indicated for use in such applications do so at their own risk. Please contact authorized Vishay personnel to obtain written terms and conditions regarding products designed for such applications.

No license, express or implied, by estoppel or otherwise, to any intellectual property rights is granted by this document or by any conduct of Vishay. Product names and markings noted herein may be trademarks of their respective owners.

Material Category Policy

Vishay Intertechnology, Inc. hereby certifies that all its products that are identified as RoHS-Compliant fulfill the definitions and restrictions defined under Directive 2011/65/EU of The European Parliament and of the Council of June 8, 2011 on the restriction of the use of certain hazardous substances in electrical and electronic equipment (EEE) - recast, unless otherwise specified as non-compliant.

Please note that some Vishay documentation may still make reference to RoHS Directive 2002/95/EC. We confirm that all the products identified as being compliant to Directive 2002/95/EC conform to Directive 2011/65/EU.

Vishay Intertechnology, Inc. hereby certifies that all its products that are identified as Halogen-Free follow Halogen-Free requirements as per JEDEC JS709A standards. Please note that some Vishay documentation may still make reference to the IEC 61249-2-21 definition. We confirm that all the products identified as being compliant to IEC 61249-2-21 conform to JEDEC JS709A standards.

OCEAN CHIPS
Океан Электроники
Поставка электронных компонентов

Компания «Океан Электроники» предлагает заключение долгосрочных отношений при поставках импортных электронных компонентов на взаимовыгодных условиях!

Наши преимущества:

- Поставка оригинальных импортных электронных компонентов напрямую с производств Америки, Европы и Азии, а так же с крупнейших складов мира;
- Широкая линейка поставок активных и пассивных импортных электронных компонентов (более 30 млн. наименований);
- Поставка сложных, дефицитных, либо снятых с производства позиций;
- Оперативные сроки поставки под заказ (от 5 рабочих дней);
- Экспресс доставка в любую точку России;
- Помощь Конструкторского Отдела и консультации квалифицированных инженеров;
- Техническая поддержка проекта, помощь в подборе аналогов, поставка прототипов;
- Поставка электронных компонентов под контролем ВП;
- Система менеджмента качества сертифицирована по Международному стандарту ISO 9001;
- При необходимости вся продукция военного и аэрокосмического назначения проходит испытания и сертификацию в лаборатории (по согласованию с заказчиком);
- Поставка специализированных компонентов военного и аэрокосмического уровня качества (Xilinx, Altera, Analog Devices, Intersil, Interpoint, Microsemi, Actel, Aeroflex, Peregrine, VPT, Syfer, Eurofarad, Texas Instruments, MS Kennedy, Miteq, Cobham, E2V, MA-COM, Hittite, Mini-Circuits, General Dynamics и др.);

Компания «Океан Электроники» является официальным дистрибьютором и эксклюзивным представителем в России одного из крупнейших производителей разъемов военного и аэрокосмического назначения **«JONHON»**, а так же официальным дистрибьютором и эксклюзивным представителем в России производителя высокотехнологичных и надежных решений для передачи СВЧ сигналов **«FORSTAR»**.

AVIC JONHON

«JONHON» (основан в 1970 г.)

Разъемы специального, военного и аэрокосмического назначения:

(Применяются в военной, авиационной, аэрокосмической, морской, железнодорожной, горно- и нефтедобывающей отраслях промышленности)

«FORSTAR» (основан в 1998 г.)

ВЧ соединители, коаксиальные кабели, кабельные сборки и микроволновые компоненты:

(Применяются в телекоммуникациях гражданского и специального назначения, в средствах связи, РЛС, а так же военной, авиационной и аэрокосмической отраслях промышленности).

FORSTAR®

Телефон: 8 (812) 309-75-97 (многоканальный)
Факс: 8 (812) 320-03-32
Электронная почта: ocean@oceanchips.ru
Web: http://oceanchips.ru/
Адрес: 198099, г. Санкт-Петербург, ул. Калинина, д. 2, корп. 4, лит. А