High Precision (0.01 %/10 ppm/°C) Through Hole Thin Film Conformal Coating Sil Resistor

FEATURES

- Tight TCR to 5 ppm/°C (in 0 °C; + 70 °C)
- Incorporates high stability thin film element (0.1 % at + 70 °C at Pn during 1000 h)
- Through hole (Sil)
- 100 Ω to 10 MΩ
- Tight tolerance down to 0.01 %
- Material categorization: For definitions of compliance please see www.vishay.com/doc?99912

Pb-free
RoHS COMPLIANT
HALOGEN FREE
GREEN (5-2008)

SCHEMATIC

STANDARD ELECTRICAL SPECIFICATIONS					
MODEL	RESISTANCE RANGE Ω	RATED POWER $P_{70\,°C}$ W	LIMITING ELEMENT VOLTAGE V	TOLERANCE ± %	TEMPERATURE COEFFICIENT [1] ± ppm/°C
CNS 020	100 to 10M	0.5	300	0.01, 0.02, 0.05, 0.1, 0.25, 0.5, 1	5, 10

Note

(1) 15 ppm/°C for R ≥ 1.5M

CLIMATIC SPECIFICATIONS	
Operating temperature range	- 55 °C; + 155 °C

MECHANICAL SPECIFICATIONS	
Resistive material	Nichrome
Substrate material	Alumina
Terminals	Tin/silver on Cu alloy
Protection	Conformal epoxy coating

DIMENSIONS AND IMPRINTING CNS 020

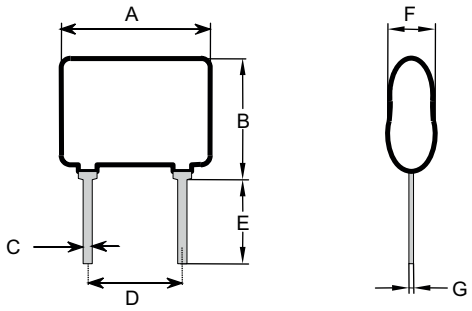

In clear: model, Vishay logo and manufacturing code. On back: ohmic value (in Ω), tolerance (in %)

DIMENSION	INCHES	MILLIMETERS
A	0.330	8.38 max.
B	0.261	6.62 max.
C	0.020	0.51
D	0.200	5.08
E	0.125	3.17 min.
F	0.100	2.54 max.
G	0.010	0.25

For technical questions, contact: sferthinfilm@vishay.com
THIS DOCUMENT IS SUBJECT TO CHANGE WITHOUT NOTICE. THE PRODUCTS DESCRIBED HEREIN AND THIS DOCUMENT ARE SUBJECT TO SPECIFIC DISCLAIMERS, SET FORTH AT www.vishay.com/doc?91000

TECHNICAL SPECIFICATIONS

TEST		SPECIFICATIONS	CONDITIONS
MATERIAL		**PASSIVATED NICHROME**	
Absolute TCR	Standard [1]	± 10 ppm/°C	- 40 °C to + 125 °C
	On request	± 5 ppm/°C	0 °C to + 70 °C
Power rating		0.5 W	at + 70 °C
		0.3 W	at + 125 °C
Dissipation factor (in air) $1/R_{TH}$ [2]			6.7 mW/°C

Notes

[1] 15 ppm/°C for R ≥ 1.5M

[2] For information only

ENVIRONMENTAL TEST

TEST	REQUIREMENTS			CONDITIONS
	NFC 83220 CECC40300	MIL-PRF 55182E	DRIFTS (MAX.)	
Overload	± 0.01 %	± 0.05 %	0.01 %	2.5 Un/5 s $U_{max.}$ < 2 Un
Temperature cycling	± 0.01 %	± 0.05 %	0.01 %	- 55 °C/+ 155 °C 5 cycles CEI 63-2-14 Test No
Terminal strength	± 0.01 %	± 0.02 %	0.01 %	CEI 68-2-21 Test Ua (pulling), Ub (bending), Uc (twisting)
Resistance to solder heat	± 0.01 %	± 0.02 %	0.01 %	+ 260 °C/10 s, CEI 68-2-20A Test T6 (Met 1A)
Vibration	± 0.01 %	± 0.02 %	0.01 %	10 Hz to 500 Hz 10 g, 6 h Met B4; CEI 68-2-6 Test Fc
Climatic sequence	± 0.05 % insulation resistance > 10^2 MΩ	-	0.05 %	- 55 °C/+ 155 °C 6 cycles 95 % RH RH 85 mbar CEI68-1
Moisture	± 0.05 % insulation resistance > 10^2 MΩ	-	0.02 %	56 days 95 % RH + 40 °C CEI 68-2-3
High temperature storage	± 0.05 %	-	0.05 %	1000 h/+ 155 °C CEI 68-2-20A; Test B

GLOBAL PART NUMBER INFORMATION

New Global Part Numbering: CNS020-301KF (preferred part number format)

C	N	S	0	2	0	-	3	0	1	K	F

GLOBAL MODEL	VALUE	TOLERANCE
CNS 020	Decimal: **R, K** or M	**L** = ± 0.01 % **P** = ± 0.02 % **W** = ± 0.05 % **B** = ± 0.1 % **C** = ± 0.25 % **D** = ± 0.5 % **F** = ± 1.0 %

Historical Part Number example: CNS 020 301K 1 % (will continue to be accepted)

CNS 020	301K	1 %
HISTORICAL MODEL	VALUE	TOLERANCE

For technical questions, contact: sferthinfilm@vishay.com
THIS DOCUMENT IS SUBJECT TO CHANGE WITHOUT NOTICE. THE PRODUCTS DESCRIBED HEREIN AND THIS DOCUMENT ARE SUBJECT TO SPECIFIC DISCLAIMERS, SET FORTH AT www.vishay.com/doc?91000

Disclaimer

ALL PRODUCT, PRODUCT SPECIFICATIONS AND DATA ARE SUBJECT TO CHANGE WITHOUT NOTICE TO IMPROVE RELIABILITY, FUNCTION OR DESIGN OR OTHERWISE.

Vishay Intertechnology, Inc., its affiliates, agents, and employees, and all persons acting on its or their behalf (collectively, "Vishay"), disclaim any and all liability for any errors, inaccuracies or incompleteness contained in any datasheet or in any other disclosure relating to any product.

Vishay makes no warranty, representation or guarantee regarding the suitability of the products for any particular purpose or the continuing production of any product. To the maximum extent permitted by applicable law, Vishay disclaims (i) any and all liability arising out of the application or use of any product, (ii) any and all liability, including without limitation special, consequential or incidental damages, and (iii) any and all implied warranties, including warranties of fitness for particular purpose, non-infringement and merchantability.

Statements regarding the suitability of products for certain types of applications are based on Vishay's knowledge of typical requirements that are often placed on Vishay products in generic applications. Such statements are not binding statements about the suitability of products for a particular application. It is the customer's responsibility to validate that a particular product with the properties described in the product specification is suitable for use in a particular application. Parameters provided in datasheets and/or specifications may vary in different applications and performance may vary over time. All operating parameters, including typical parameters, must be validated for each customer application by the customer's technical experts. Product specifications do not expand or otherwise modify Vishay's terms and conditions of purchase, including but not limited to the warranty expressed therein.

Except as expressly indicated in writing, Vishay products are not designed for use in medical, life-saving, or life-sustaining applications or for any other application in which the failure of the Vishay product could result in personal injury or death. Customers using or selling Vishay products not expressly indicated for use in such applications do so at their own risk. Please contact authorized Vishay personnel to obtain written terms and conditions regarding products designed for such applications.

No license, express or implied, by estoppel or otherwise, to any intellectual property rights is granted by this document or by any conduct of Vishay. Product names and markings noted herein may be trademarks of their respective owners.

Material Category Policy

Vishay Intertechnology, Inc. hereby certifies that all its products that are identified as RoHS-Compliant fulfill the definitions and restrictions defined under Directive 2011/65/EU of The European Parliament and of the Council of June 8, 2011 on the restriction of the use of certain hazardous substances in electrical and electronic equipment (EEE) - recast, unless otherwise specified as non-compliant.

Please note that some Vishay documentation may still make reference to RoHS Directive 2002/95/EC. We confirm that all the products identified as being compliant to Directive 2002/95/EC conform to Directive 2011/65/EU.

Vishay Intertechnology, Inc. hereby certifies that all its products that are identified as Halogen-Free follow Halogen-Free requirements as per JEDEC JS709A standards. Please note that some Vishay documentation may still make reference to the IEC 61249-2-21 definition. We confirm that all the products identified as being compliant to IEC 61249-2-21 conform to JEDEC JS709A standards.

OCEAN CHIPS
Океан Электроники
Поставка электронных компонентов

Компания «Океан Электроники» предлагает заключение долгосрочных отношений при поставках импортных электронных компонентов на взаимовыгодных условиях!

Наши преимущества:

- Поставка оригинальных импортных электронных компонентов напрямую с производств Америки, Европы и Азии, а так же с крупнейших складов мира;
- Широкая линейка поставок активных и пассивных импортных электронных компонентов (более 30 млн. наименований);
- Поставка сложных, дефицитных, либо снятых с производства позиций;
- Оперативные сроки поставки под заказ (от 5 рабочих дней);
- Экспресс доставка в любую точку России;
- Помощь Конструкторского Отдела и консультации квалифицированных инженеров;
- Техническая поддержка проекта, помощь в подборе аналогов, поставка прототипов;
- Поставка электронных компонентов под контролем ВП;
- Система менеджмента качества сертифицирована по Международному стандарту ISO 9001;
- При необходимости вся продукция военного и аэрокосмического назначения проходит испытания и сертификацию в лаборатории (по согласованию с заказчиком);
- Поставка специализированных компонентов военного и аэрокосмического уровня качества (Xilinx, Altera, Analog Devices, Intersil, Interpoint, Microsemi, Actel, Aeroflex, Peregrine, VPT, Syfer, Eurofarad, Texas Instruments, MS Kennedy, Miteq, Cobham, E2V, MA-COM, Hittite, Mini-Circuits, General Dynamics и др.);

Компания «Океан Электроники» является официальным дистрибьютором и эксклюзивным представителем в России одного из крупнейших производителей разъемов военного и аэрокосмического назначения **«JONHON»**, а так же официальным дистрибьютором и эксклюзивным представителем в России производителя высокотехнологичных и надежных решений для передачи СВЧ сигналов **«FORSTAR»**.

AVIC JONHON

«JONHON» (основан в 1970 г.)

Разъемы специального, военного и аэрокосмического назначения:

(Применяются в военной, авиационной, аэрокосмической, морской, железнодорожной, горно- и нефтедобывающей отраслях промышленности)

«FORSTAR» (основан в 1998 г.)

ВЧ соединители, коаксиальные кабели, кабельные сборки и микроволновые компоненты:

(Применяются в телекоммуникациях гражданского и специального назначения, в средствах связи, РЛС, а так же военной, авиационной и аэрокосмической отраслях промышленности).

FORSTAR®

Телефон: 8 (812) 309-75-97 (многоканальный)
Факс: 8 (812) 320-03-32
Электронная почта: ocean@oceanchips.ru
Web: http://oceanchips.ru/
Адрес: 198099, г. Санкт-Петербург, ул. Калинина, д. 2, корп. 4, лит. А