TUSONIX Capabilities

Manufacturing

TUSONIX utilizes more than 120,000 square feet (11,150 square meters) of manufacturing space, dedicated to providing high quality EMI/RFI products.

In addition to the standard catalog items, TUSONIX has numerous variations of these designs and can custom design a part to meet your particular specifications. TUSONIX maintains a staff of highly skilled Customer Engineers to assist our customers in the design of custom products.

Meeting Customer Requirements

Headquartered in Tucson, Arizona, TUSONIX is devoted to bringing the company's broad product line to an ever expanding world market.

TUSONIX has more than five decades of efficient manufacturing expertise in its corporate heritage, and utilizes sophisticated equipment to provide customers with attractive pricing and full value for the products they purchase.

Circuits Available in this Catalog

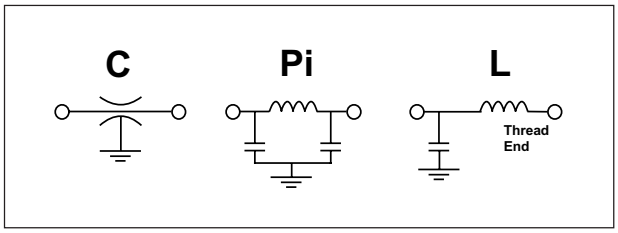

TUSONIX Quality Objective

The timely delivery of quality products which exceed our customers' expectations through the use of effective teamwork and the process of continuous improvement.

TUSONIX Quality

Quality is the key ingredient in all TUSONIX products with approval to MIL-PRF-15733, MIL-PRF-81 and MIL-C-11015. TUSONIX maintains a fully approved Quality Assurance laboratory and relies heavily on Statistical Process Control to monitor critical operations.

TUSONIX
7741 North Business Park Drive
Tucson, Arizona 85743
Ph: 520-744-0400 Fax: 520-744-6155
Website: www.tusonix.com
E-mail: sales@tusonix.com

7741 North Business Park Drive
Tucson, Arizona 85743
Ph: 520-744-0400 Fax: 520-744-6155
Web site: www.tusonix.com E-mail: sales@tusonix.com

Providing Excellence in EMI/RFI Filtering Components...

TUSONIX, Inc. manufactures thousands of EMC Products featuring an extensive line of EMI/RFI Filters and Capacitors.

We combine Technology, Expertise, Versatility and Innovation to produce the industry's most complete line of ceramic EMI/RFI Filters.

TUSONIX draws upon its 50+ years of manufacturing expertise and an accumulated base of ceramic dielectric technology to provide an ever expanding line of EMI/RFI Filters and Capacitors.

Tusonix products not only set the industry standard but lead the way in the development of tomorrow's EMI Technology.

Contents

Capacitors	**3-4**
Solder Mount Filters	**5-7, 11-12**
Press-In Filters	**8-10**
Bushing Mount Filters	**13-23**
4-40 Thread	**13-14**
6-40 Thread	**15**
6-32 Thread	**16**
8-32 Thread	**17-18**
8-36 Thread	**19**
12-28 Thread	**19**
12-32 Thread	**20**
1/4-28 Thread	**21**
5/16-24 Thread	**21**
5/16-32 Thread	**21**
High Voltage	**21**
Metric Thread	**22**
Mil Cross Reference	**15**
Coaxial Broadband	**23-24**
Standard Hardware Dimensions	**24**
Installation Recommendations	**25**
EIA/Tusonix Tolerance Codes	**25**
General Test Specifications	**26**

For additional product lines manufactured by TUSONIX, please refer to the back cover of this Catalog.

How to use this Catalog

This Catalog identifies standard parts produced by TUSONIX. Part numbers are listed in sections by mounting style (Solder Mount or Bushing Mount). Bushing parts are listed by circuit configuration and arranged in ascending order with respect to voltage rating at 125°C and then capacitance value.

FILTERS

Filters are assigned a four digit style number followed by a three digit variation number. (Example: 4100-003)

FEED-THRU CAPACITORS

Feed-thru capacitors are assigned a three or four digit style number followed by a three digit variation number, then the EIA Code for temperature characteristic, capacitance and tolerance. (Example: 2482-012-X5U0-272M)

For additional EIA Codes and Tolerances, please see page 25.

The products listed in this catalog are only a few of the thousands of variations that TUSONIX produces. For custom component design, please contact the factory direct.

TUSONIX

Solder Mount Feed-Thru Capacitors

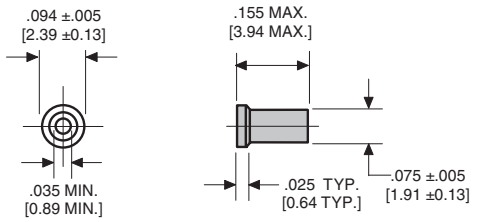

STYLE 1

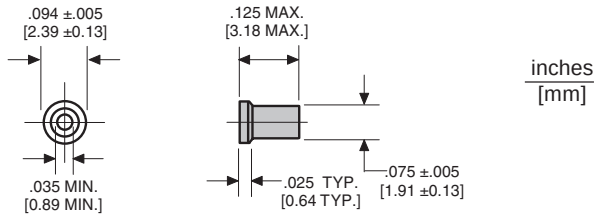

inches
[mm]

STYLE 2

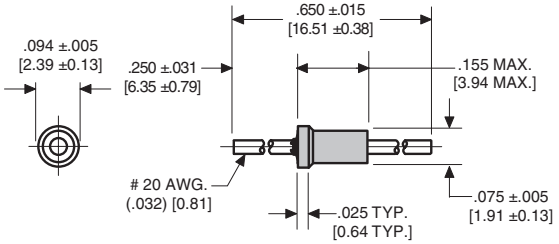

STYLE 3

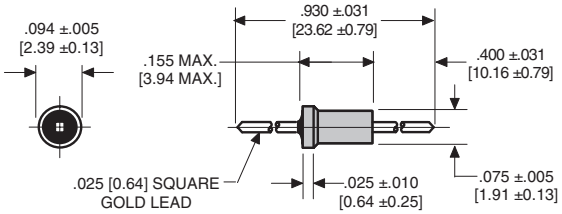

STYLE 4

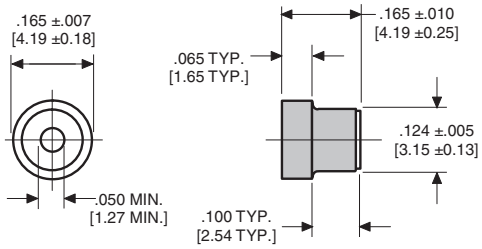

STYLE 5

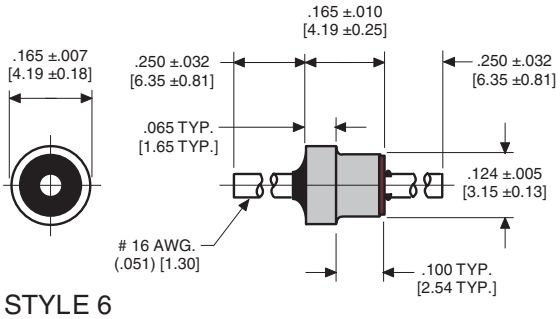

STYLE 6

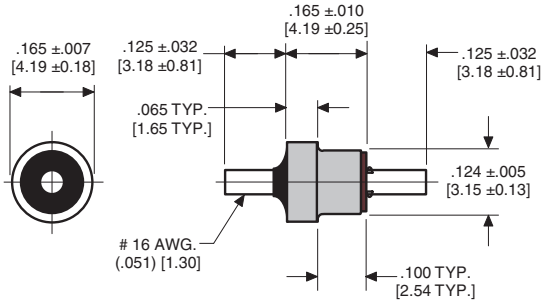

STYLE 7

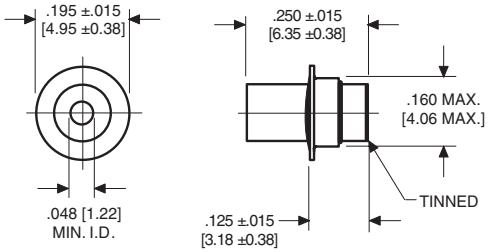

STYLE 8

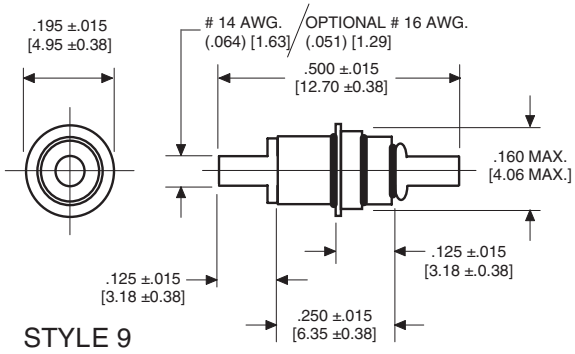

STYLE 9

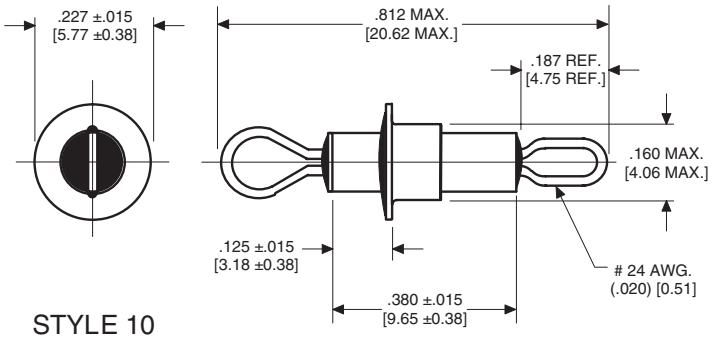

STYLE 10

Drawings not to scale.

7741 North Business Park Drive
Tucson, Arizona 85743
Ph: 520-744-0400 Fax: 520-744-6155
Web site: www.tusonix.com E-mail: sales@tusonix.com

Solder Mount Feed-Thru Capacitors

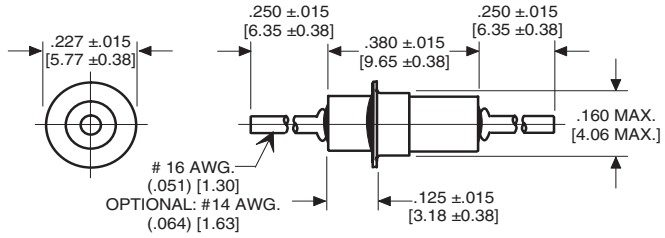

STYLE 11

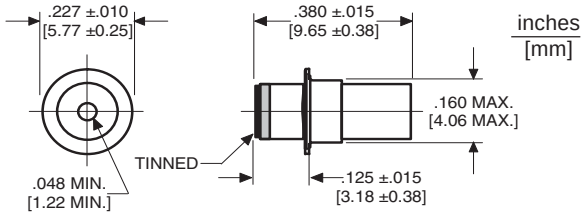

STYLE 12

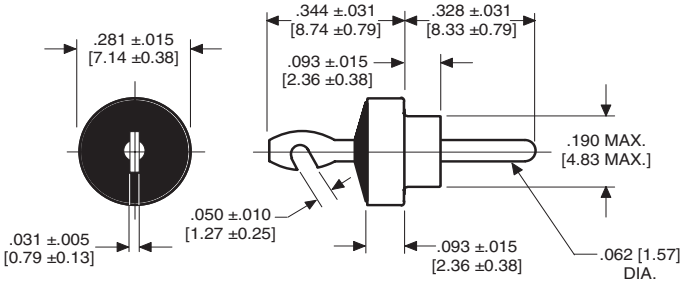

STYLE 13

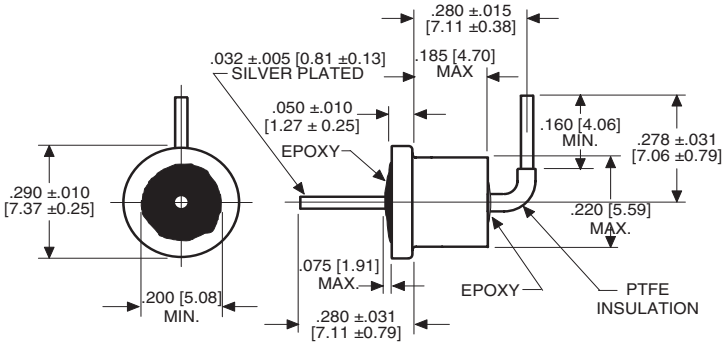

STYLE 14

Series Number	Temperature Range	WVDC	MAX. CAP. Nominal (pF)
2404	Z5, Y5, X5	500	7000
	X7	250	7000
2482	Z5, Y5, X5	300	4000
	X7	150	4000
2450	Z5, Y5, X5	500	1800
	X7	250	1800
2461	Z5, Y5, X5	200	1000
	X7	100	1000
2463	Z5, Y5, X5	200	2000
	X7	100	2000
2470	Z5, Y5, X5	250AC	2000
	--	--	--

Drawings not to scale.

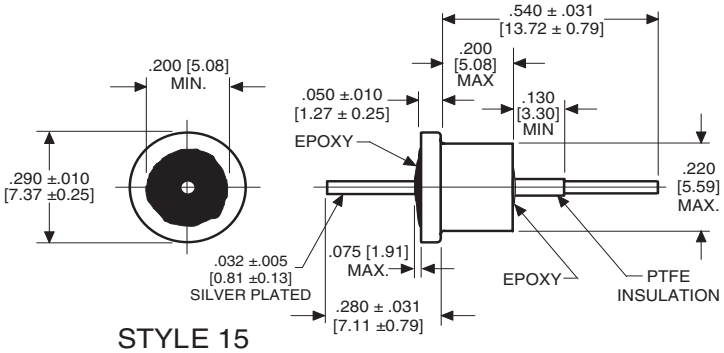

STYLE 15

Please see temperature Characteristics and EIA Codes on page 25.

●UL Recognized to UL standard 1283; UL File No. E201344

TUSONIX Part Number	Style	Notes	Circuit	Working Voltage (dc) 85°C	Working Voltage (dc) 125°C	Capacitance (pF)	Capacitance Tolerance	Current (A)	Typical No-Load Insertion Loss (dB) at 25°C per MIL-Std-220 1MHz	10MHz	100MHz	1GHz	10GHz
C Configuration													
2463-001-X5S0-471M	2	--	C	200	--	470	±20%	--	--	--	12	27	27
2463-002-X5S0-471M	3	--	C	200	--	470	±20%	10	--	--	12	27	27
2463-003-X5U0-471P	4	--	C	200	--	470	+100-0%	10	--	--	12	27	27
2461-000-X7V0-102P	5	--	C	--	100	1000	+100-0%	--	--	3	20	35	40
2461-001-X7V0-102AA	6	--	C	--	100	1000	GMV	20	--	3	20	35	40
2461-002-X7V0-102M	7	--	C	--	100	1000	±20%	20	--	3	20	35	40
2463-000-X7U0-152P	1	--	C	--	100	1500	+100-0%	--	--	5	22	35	40
2463-002-X5U0-152P	3	--	C	200	--	1500	+100-0%	10	--	5	22	35	40
2463-003-X5U0-152P	4	--	C	200	--	1500	+100-0%	10	--	5	22	35	40
2482-001-X5U0-471M	9	--	C	300	--	470	±20%	20	--	--	12	27	27
2482-012-X5U0-102M	8	--	C	300	--	1000	±20%	--	--	3	20	35	40
2482-001-X5U0-102M	9	--	C	300	--	1000	±20%	20	--	3	20	35	40
2450-001-X5R0-101K	13	--	C	500	--	100	±10%	20	--	--	3	20	28
2450-001-X5R0-471M	13	--	C	500	--	470	±20%	20	--	--	12	27	27
2404-000-X7R0-471M	11	--	C	--	250	470	±20%	20	--	--	12	27	27
2450-001-X5U0-102P	13	--	C	500	--	1000	+100-0%	20	--	3	20	35	40
2404-000-X5U0-102P	11	--	C	500	--	1000	+100-0%	20	--	3	20	35	40
2404-014-X5U0-102P	12	--	C	500	--	1000	+100-0%	--	--	3	20	35	40
2404-014-X5W0-502M	12	--	C	500	--	5000	±20%	--	--	15	30	45	50
2404-000-X5W0-502Z	11	--	C	500	--	5000	+80-20%	20	--	15	30	45	50
2404-007-X5W0-502Z	10	--	C	500	--	5000	+80-20%	15	--	15	30	45	50
2470-500●	14	--	C	250AC	--	1000	+100-0%	10	--	3	20	35	40
2470-501●	15	--	C	250AC	--	1000	+100-0%	10	--	3	20	35	40

The products listed in this catalog are only a few of the thousands of variations that TUSONIX produces. For custom component design, please contact the factory direct.

TUSONIX

Solder Mount C Filters

4300 Series Miniature EMI Filter
MICROWAVE APPLICATIONS:

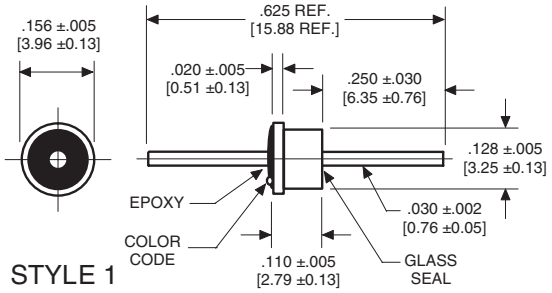

STYLE 1

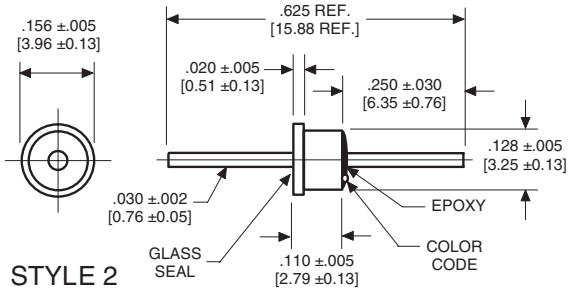

STYLE 2

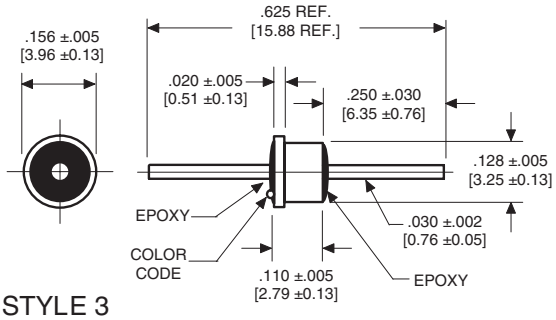

STYLE 3

- Oscillators
- Attenuators
- Low Noise Amplifiers
- Microwave Filters

inches
[mm]

TUSONIX Part Number	Style	Circuit	Working Voltage (dc) 85°C	Working Voltage (dc) 125°C	Capacitance (pF)	Capacitance Tolerance	Current (A)	Minimum No-Load Insertion Loss (dB) at 25°C per MIL-Std-220 1MHz	10MHz	100MHz	1GHz	10GHz	Color Code
Epoxy Sealed Top (flange)/ Glass Sealed Bottom													
4300-005	1	C	70	50	10,000	GMV	5	4	21	35	50	60	BLACK
4300-055	1	C	70	50	10,000	±20%	5	4	21	35	50	60	BLK-GOLD
4300-006	1	C	70	50	15,000	GMV	5	7	20	35	55	60	ORANGE
4300-013	1	C	70	50	27,000	GMV	5	10	28	42	65	65	RED-RED
4300-014	1	C	50	50	50,000	GMV	5	15	35	45	70	--	BLU-BLU
4300-003	1	C	150	100	2700	GMV	5	--	10	25	40	50	RED
4300-053	1	C	150	100	2700	±20%	5	--	10	25	40	50	RED-GOLD
4300-004	1	C	150	100	5000	GMV	5	--	15	30	45	55	YELLOW
4300-054	1	C	150	100	5000	±20%	5	--	15	30	45	55	YEL-GOLD
4300-680	1	C	300	200	5	MAX	5	--	--	--	--	--	BLK-BLK
4300-008	1	C	300	200	10	GMV	5	--	--	--	5	20	VIOLET
4300-009	1	C	300	200	25	GMV	5	--	--	--	10	25	BLUE
4300-000	1	C	300	200	100	GMV	5	--	--	3	20	28	GREEN
4300-050	1	C	300	200	100	±20%	5	--	--	3	20	28	GRN-GOLD
4300-001	1	C	300	200	500	GMV	5	--	--	15	35	40	BROWN
4300-051	1	C	300	200	500	±20%	5	--	--	15	35	40	BRWN-GOLD
4300-007	1	C	300	200	1000	GMV	5	--	5	20	35	45	GRAY
4300-002	1	C	300	200	1200	GMV	5	--	5	20	35	45	WHITE
4300-052	1	C	300	200	1200	±20%	5	--	5	20	35	45	WHT-GOLD

Drawings not to scale.

7741 North Business Park Drive
Tucson, Arizona 85743
Ph: 520-744-0400 Fax: 520-744-6155
Web site: www.tusonix.com E-mail: sales@tusonix.com

TUSONIX 4300 Series Miniature EMI Filters

These filters are ideal for applications where small size and high performance are critical. These C configured filters can be glass sealed on either one of the ends for optimal sealing between system compartments or components.

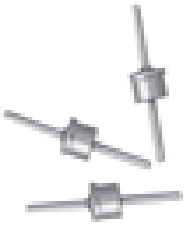

The gold plating on the leads offers excellent conductivity and connective ability using common gold bonding methods. The small package and large range of electrical characteristics of the 4300 Series make it an effective solution for a variety of microwave applications.

TUSONIX Part Number	Style	Circuit	Working Voltage (dc)		Capacitance (pF)	Capacitance Tolerance	Current (A)	Minimum No-Load Insertion Loss (dB) at 25°C per MIL-Std-220					Color Code
			85°C	125°C				1MHz	10MHz	100MHz	1GHz	10GHz	
Glass Sealed Top (flange)/ Epoxy Sealed Bottom													
4300-025	2	C	70	50	10,000	GMV	5	4	21	35	50	60	BLACK
4300-065	2	C	70	50	10,000	±20%	5	4	21	35	50	60	BLK-GOLD
4300-026	2	C	70	50	15,000	GMV	5	7	20	35	55	60	ORANGE
4300-031	2	C	70	50	27,000	GMV	5	10	28	42	65	65	RED-RED
4300-034	2	C	50	50	50,000	GMV	5	15	35	45	70	--	BLU-BLU
4300-023	2	C	150	100	2700	GMV	5	--	10	25	40	50	RED
4300-063	2	C	150	100	2700	±20%	5	--	10	25	40	50	RED-GOLD
4300-024	2	C	150	100	5000	GMV	5	--	15	30	45	55	YELLOW
4300-064	2	C	150	100	5000	±20%	5	--	15	30	45	55	YEL-GOLD
4300-681	2	C	300	200	5	MAX	5	--	--	--	--	--	BLK-BLK
4300-028	2	C	300	200	10	GMV	5	--	--	--	5	20	VIOLET
4300-029	2	C	300	200	25	GMV	5	--	--	--	10	25	BLUE
4300-020	2	C	300	200	100	GMV	5	--	--	3	20	28	GREEN
4300-060	2	C	300	200	100	±20%	5	--	--	3	20	28	GRN-GOLD
4300-021	2	C	300	200	500	GMV	5	--	--	15	35	40	BROWN
4300-061	2	C	300	200	500	±20%	5	--	--	15	35	40	BRWN-GOLD
4300-027	2	C	300	200	1000	GMV	5	--	5	20	35	45	GRAY
4300-022	2	C	300	200	1200	GMV	5	--	5	20	35	45	WHITE
4300-062	2	C	300	200	1200	±20%	5	--	5	20	35	45	WHT-GOLD
Epoxy Sealed Top (flange)/ Epoxy Sealed Bottom													
4302-005	3	C	70	50	10,000	GMV	10	4	21	35	50	60	BLACK
4302-006	3	C	70	50	15,000	GMV	10	7	20	35	55	60	ORANGE
4302-013	3	C	70	50	27,000	GMV	10	10	28	42	65	65	RED-RED
4302-014	3	C	50	50	50,000	GMV	10	15	35	45	70	--	BLU-BLU
4302-003	3	C	150	100	2700	GMV	10	--	10	25	40	50	RED
4302-004	3	C	150	100	5000	GMV	10	--	15	30	45	55	YELLOW
4302-680	3	C	300	200	5	MAX	10	--	--	--	--	--	BLK-BLK
4302-008	3	C	300	200	10	GMV	10	--	--	--	5	20	VIOLET
4302-009	3	C	300	200	25	GMV	10	--	--	--	10	25	BLUE
4302-000	3	C	300	200	100	GMV	10	--	--	3	20	28	GREEN
4302-001	3	C	300	200	500	GMV	10	--	--	15	35	40	BROWN
4302-007	3	C	300	200	1000	GMV	10	--	5	20	35	45	GRAY
4302-002	3	C	300	200	1200	GMV	10	--	5	20	35	45	WHITE

Solder Mount C Filters

4305 Series - Extra Mini EMI Filters

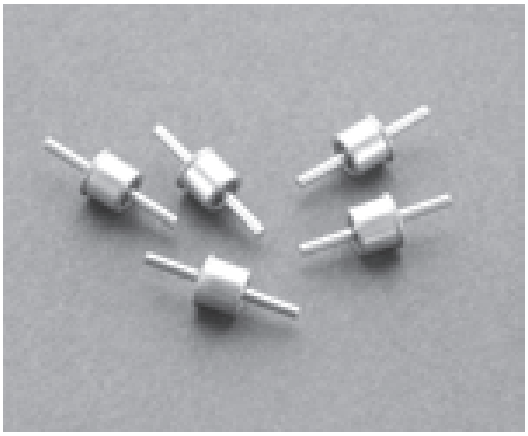

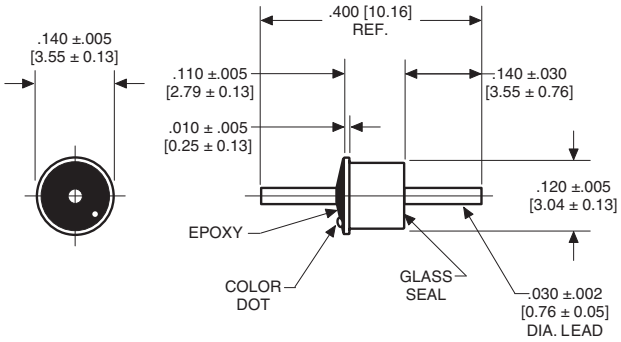

TUSONIX Part Number	Circuit	Working Voltage (dc)		Capacitance (pF)	Capacitance Tolerance	Current (A)	Minimum No-Load Insertion Loss (dB) at 25°C per MIL-Std-220					Color Code
		85°C	125°C				1MHz	10MHz	100MHz	1GHz	10GHz	
Epoxy Sealed Top (flange)/ Glass Sealed Bottom												
4305-000	C	300	200	50	+100-0%	5	--	--	--	10	25	BRWN-BROWN
4305-001	C	300	200	100	+100-0%	5	--	--	3	20	28	GREEN
4305-002	C	300	200	500	+100-0%	5	--	--	15	35	40	BROWN
4305-003	C	150	100	2700	+100-0%	5	--	10	25	40	50	RED
4305-004	C	150	100	5000	+100-0%	5	--	15	30	45	55	YELLOW
4305-005	C	300	200	10	+100-0%	5	--	--	--	5	20	VIOLET
4305-006	C	300	200	25	+100-0%	5	--	--	--	10	25	BLUE
4305-007	C	300	200	250	+100-0%	5	--	--	5	22	30	YEL-YELLOW
4305-008	C	300	200	1000	+100-0%	5	--	5	20	35	45	GRAY
4305-009	C	300	200	1500	+100-0%	5	--	5	22	35	45	GREEN-GREEN
4305-010	C	50	50	10,000	+100-0%	5	4	21	35	50	60	BLACK
4305-011	C	70	50	27,000	+100-0%	5	10	28	42	65	65	RED-RED
4305-012	C	300	200	5	+100-0%	5	--	--	--	--	5	BLUE-BLUE
4305-680	C	300	200	5	MAX	5	--	--	--	--	--	BLACK-BLACK

7741 North Business Park Drive
Tucson, Arizona 85743
Ph: 520-744-0400 Fax: 520-744-6155
Web site: www.tusonix.com E-mail: sales@tusonix.com

No Solder/Press-In C Filters

4304 Series - C Filters

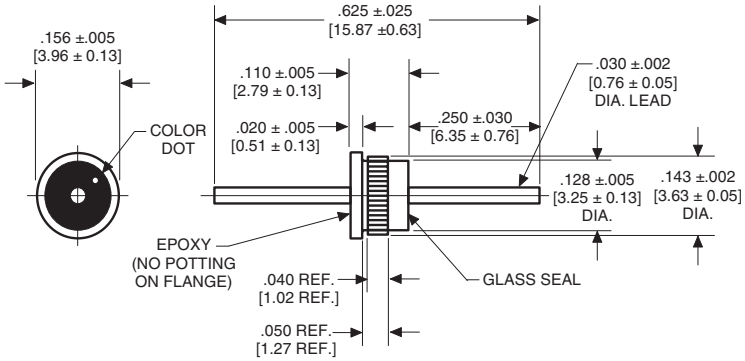

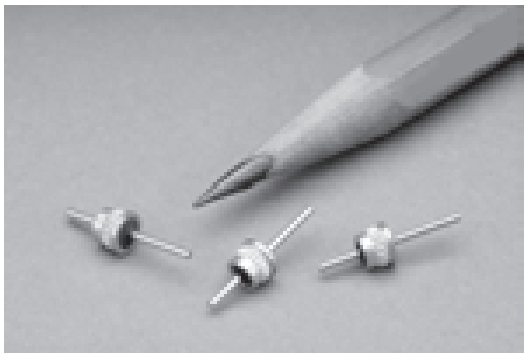

Tusonix Press-In Ceramic EMI filters suppress unwanted EMI and allow a fast, mechanical bonding that is free from soldering. And, by offering an excellent alternative to the traditional soldering installation, these finely designed, knurled filters significantly reduce assembly costs.

These EMI filters cover a variety of voltage, attenuation and capacitance ranges in a press-in mounting style.

Product installation recommendations (X-2656/9) are provided with parts to prevent damage to the component during installation.

Installation Tool: Ordering Information to right.

Installation tool

Tool Part No.	Item No.	Filter Type
4300-314	1	4304

(Ordering Example for 4304 filter tool: 4300-314-1)

TUSONIX Part Number	Circuit	Working Voltage (dc)		Capacitance (pF)	Capacitance Tolerance	Current (A)	Minimum No-Load Insertion Loss (dB) at 25°C per MIL-Std-220					Color Code
		85°C	125°C				1MHz	10MHz	100MHz	1GHz	10GHz	
Epoxy Sealed Top (flange)/ Glass Sealed Bottom												
4304-000	C	300	200	10	+100-0%	5	--	--	--	5	20	VIOLET
4304-001	C	300	200	25	+100-0%	5	--	--	--	10	25	BLUE
4304-002	C	300	200	500	+100-0%	5	--	--	15	35	40	BROWN
4304-003	C	300	200	100	+100-0%	5	--	--	3	20	28	GREEN
4304-004	C	300	200	1000	+100-0%	5	--	5	20	35	45	GRAY
4304-005	C	300	200	1200	+100-0%	5	--	5	20	35	45	WHITE
4304-006	C	150	100	2700	+100-0%	5	--	10	25	40	50	RED
4304-007	C	150	100	5000	+100-0%	5	--	15	30	45	55	YELLOW
4304-008	C	50	50	10000	+100-0%	5	4	21	35	50	60	BLACK
4304-009	C	70	50	15000	+100-0%	5	7	20	35	55	60	ORANGE
4304-010	C	70	50	27000	+100-0%	5	10	28	42	65	65	RED-RED
4304-011	C	50	50	50000	+100-0%	5	15	35	45	70	--	BLUE-BLUE
4304-681	C	300	200	5	MAX	5	--	--	--	--	--	BLACK-BLACK

Installation tool

Installation tool

Tool Part No.	Item No.	Filter Type
4300-314	2	4306

(Ordering Example for 4306 filter tool: 4300-314-2)

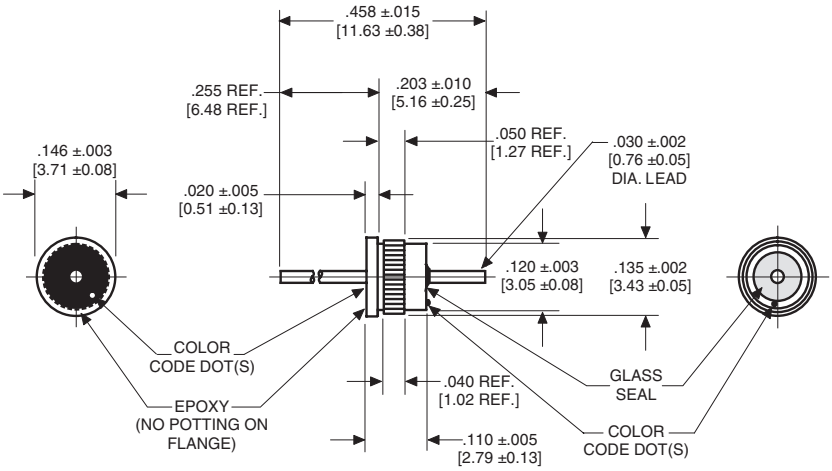

Style 1

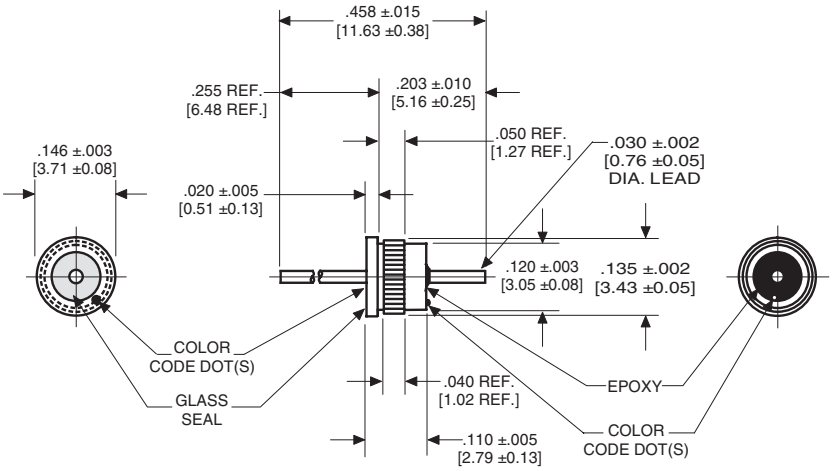

Style 2

7741 North Business Park Drive
Tucson, Arizona 85743
Ph: 520-744-0400 Fax: 520-744-6155
Web site: www.tusonix.com E-mail: sales@tusonix.com

TUSONIX's Press-In EMI filters are excellent for a variety of microwave and RF applications that include:

- attenuators
- oscillators
- synthesizers
- combiners

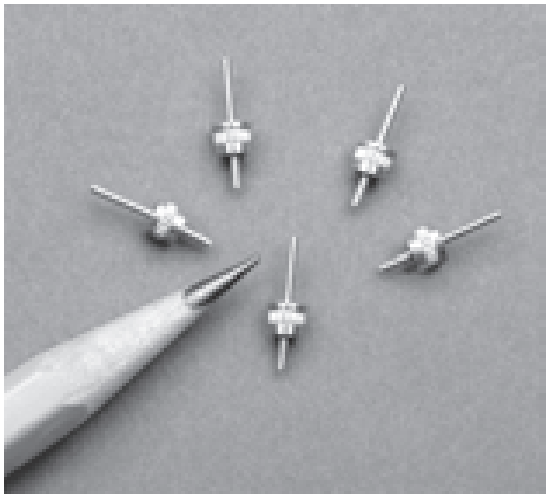

TUSONIX Part Number	Style	Circuit	Working Voltage (dc)		Capacitance (pF)	Capacitance Tolerance	Current (A)	Minimum No-Load Insertion Loss (dB) at 25°C per MIL-Std-220					Color Code
			85°C	125°C				1MHz	10MHz	100MHz	1GHz	10GHz	
Epoxy Sealed Top (flange)/ Glass Sealed Bottom													
4306-010	1	C	50	50	10000	+100-0%	5	4	21	35	50	60	BLACK
4306-011	1	C	70	50	27000	+100-0%	5	10	28	42	65	65	RED-RED
4306-030	1	C	150	100	2700	+100-0%	5	--	10	25	40	50	RED
4306-004	1	C	150	100	5000	+100-0%	5	--	15	30	45	55	YELLOW
4306-012	1	C	300	200	5	+100-0%	5	--	--	--	--	5	BLUE-BLUE
4306-680	1	C	300	200	5	MAX	5	--	--	--	--	--	BLACK-BLACK
4306-028	1	C	300	200	10	+100-0%	5	--	--	--	5	20	VIOLET
4306-006	1	C	300	200	25	+100-0%	5	--	--	--	10	25	BLUE
4306-005	1	C	300	200	50	+100-0%	5	--	--	--	10	25	BROWN-BROWN
4306-029	1	C	300	200	100	+100-0%	5	--	--	3	20	28	GREEN
4306-007	1	C	300	200	250	+100-0%	5	--	--	5	22	30	YELLOW-YELLOW
4306-003	1	C	300	200	500	+100-0%	5	--	--	15	35	40	BROWN
4306-008	1	C	300	200	1000	+100-0%	5	--	5	20	35	45	GRAY
4306-009	1	C	300	200	1500	+100-0%	5	--	5	22	35	45	GREEN-GREEN
Glass Sealed Top (flange)/ Epoxy Sealed Bottom													
4306-023	2	C	50	50	10000	+100-0%	5	4	21	35	50	60	BLACK
4306-024	2	C	70	50	27000	+100-0%	5	10	28	42	65	65	RED-RED
4306-015	2	C	150	100	2700	+100-0%	5	--	10	25	40	50	RED
4306-017	2	C	150	100	5000	+100-0%	5	--	15	30	45	55	YELLOW
4306-025	2	C	300	200	5	+100-0%	5	--	--	--	--	5	BLUE-BLUE
4306-681	2	C	300	200	5	MAX	5	--	--	--	--	--	BLACK-BLACK
4306-013	2	C	300	200	10	+100-0%	5	--	--	--	5	20	VIOLET
4306-019	2	C	300	200	25	+100-0%	5	--	--	--	10	25	BLUE
4306-018	2	C	300	200	50	+100-0%	5	--	--	--	10	25	BROWN-BROWN
4306-014	2	C	300	200	100	+100-0%	5	--	--	3	20	28	GREEN
4306-020	2	C	300	200	250	+100-0%	5	--	--	5	22	30	YELLOW-YELLOW
4306-016	2	C	300	200	500	+100-0%	5	--	--	15	35	40	BROWN
4306-021	2	C	300	200	1000	+100-0%	5	--	5	20	35	45	GRAY
4306-022	2	C	300	200	1500	+100-0%	5	--	5	22	35	45	GREEN-GREEN

Solder Mount Pi Filters

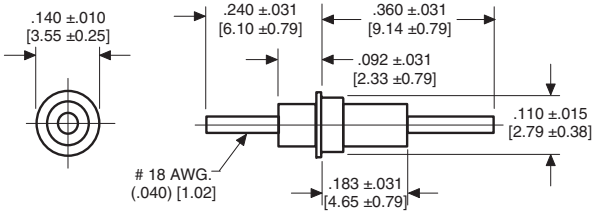

STYLE 1

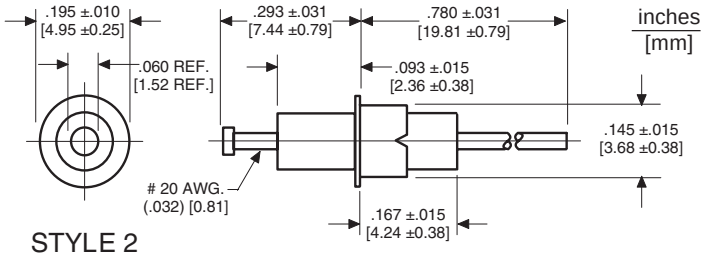

STYLE 2

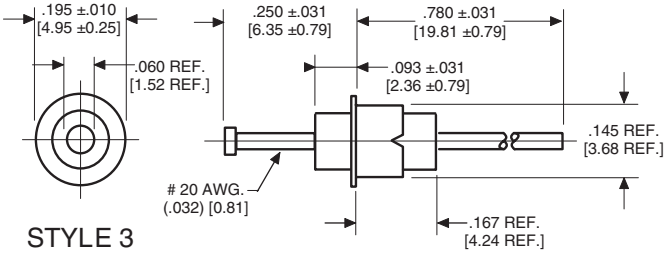

STYLE 3

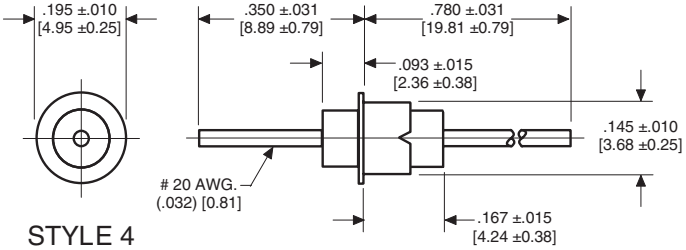

STYLE 4

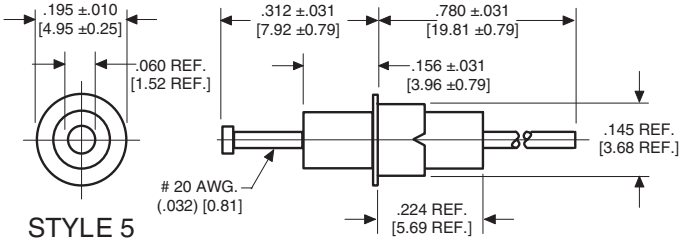

STYLE 5

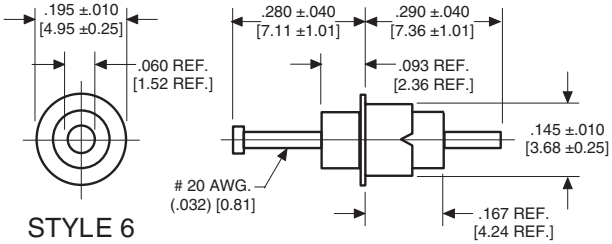

STYLE 6

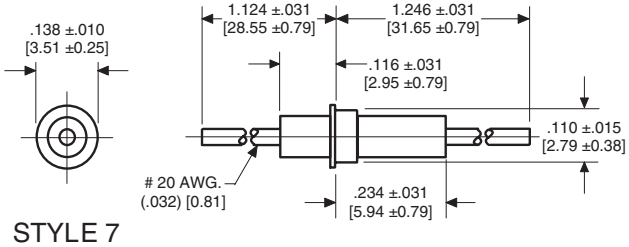

STYLE 7

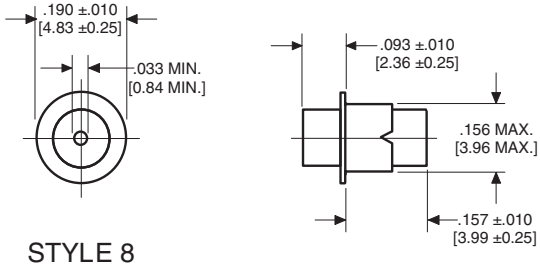

STYLE 8

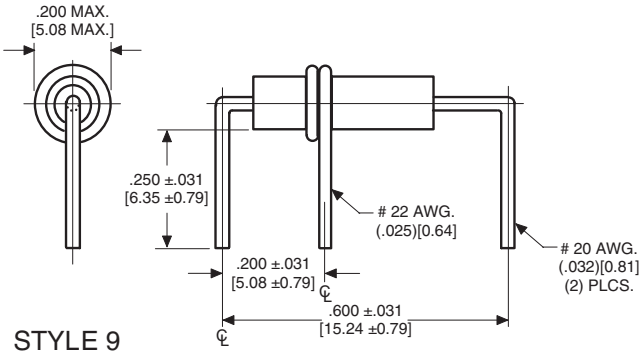

STYLE 9

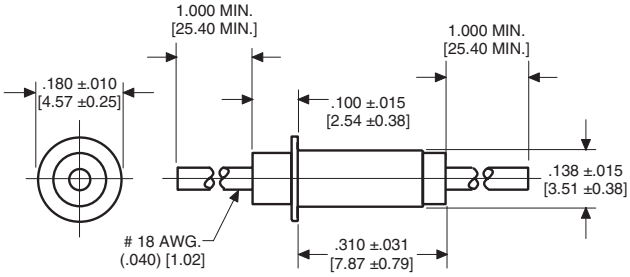

STYLE 10

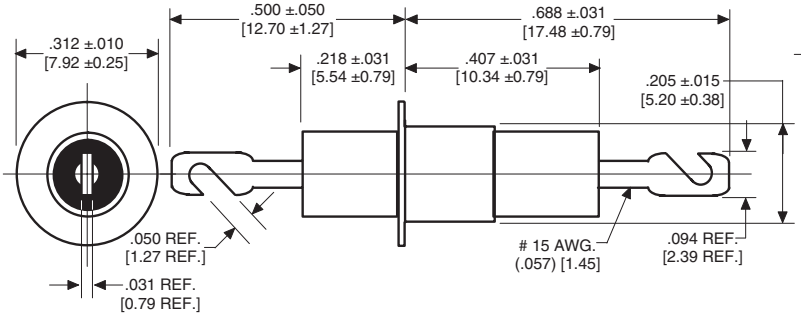

STYLE 11

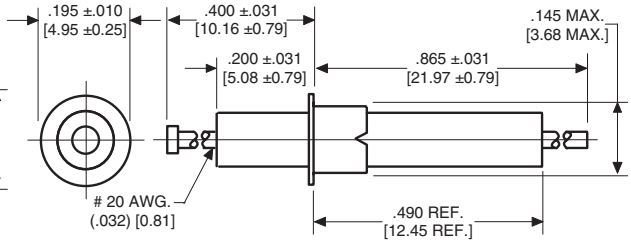

STYLE 12

Drawings not to scale.

7741 North Business Park Drive
Tucson, Arizona 85743
Ph: 520-744-0400 Fax: 520-744-6155
Web site: www.tusonix.com E-mail: sales@tusonix.com

Solder Mount Pi Filters

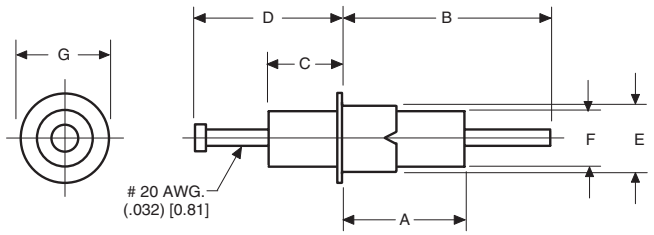

STYLE 13 THROUGH 19

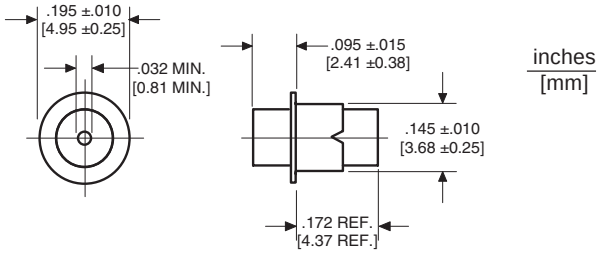

STYLE 20

DIMENSIONS FOR STYLES 13 THROUGH 19								
Style Number	MIL-PRF-15733	DIM. A	DIM. B	DIM. C	DIM. D	DIM. E	DIM. F	DIM. G
13	/62-0003	.272 ± .025 [6.91 ± 0.64]	.438 ± .062 [11.13 ± 1.57]	.156 ± .015 [3.96 ± 0.38]	.312 ± .031 [7.92 ± 0.79]	.145 ± .015 [3.68 ± 0.38]	----	.190 ± .015 [4.83 ± 0.38]
14	/62-0004	.151 ± .031 [3.84 ± 0.79]	.780 ± .031 [19.81 ± 0.79]	.093 ± .031 [2.36 ± 0.79]	.273 ± .031 [6.93 ± 0.79]	.145 ± .015 [3.68 ± 0.38]	----	.196 ± .007 [4.98 ± 0.18]
15	/51-0002	.226 ± .022 [5.74 ± 0.56]	.780 ± .031 [19.81 ± 0.79]	.164 ± .022 [4.16 ± 0.56]	.312 ± .031 [7.92 ± 0.79]	.145 ± .015 [3.68 ± 0.38]	----	.203 ± .015 [5.16 ± 0.38]
16	/33-0001 /33-0002♦	.170 ± .027 [4.32 ± 0.69]	.780 ± .031 [19.81 ± 0.79]	.093 ± .015 [2.36 ± 0.38]	.288 ± .015 [7.32 ± 0.38]	----	.125 MAX [3.18 MAX]	.190 ± .015 [4.83 ± 0.38]
17	/62-0001	.250 ± .031 [6.35 ± 0.79]	.406 ± .031 [10.31 ± 0.79]	.156 ± .031 [3.96 ± 0.79]	.312 ± .031 [7.92 ± 0.79]	.145 ± .015 [3.68 ± 0.38]	.125 ± .015 [3.18 ± 0.38]	.190 ± .015 [4.83 ± 0.38]
18	/62-0002♦	.231± .046 [5.87 ± 1.17]	1.231± .077 [31.27 ± 1.96]	.109± .031 [2.77 ± 0.79]	1.109 ± .062 [28.17 ± 1.57]	.110 ± .015 [2.79 ± 0.38]	----	.143 ± .010 [3.63 ± 0.25]
19	/51-0001	.250 ± .031 [6.35 ± 0.79]	.406 ± .031 [10.31 ± 0.79]	.156 ± .031 [3.96 ± 0.79]	.312 ± .031 [7.92 ± 0.79]	.142 ± .007 [3.61 ± 0.18]	.122 ± .017 [3.10 ± 0.43]	.195 ± .010 [4.95 ± 0.25]

Notes:	
♦	Straight Lead

TUSONIX Part Number	MIL-PRF-15733 Number	Style	Notes	Circuit	Working Voltage (dc)		Capacitance (pF)	Capacitance Tolerance	Current (A)	Minimum No-Load Insertion Loss (dB) at 25°C per MIL-Std-220				
					85°C	125°C				1MHz	10MHz	100MHz	1GHz	10GHz
Pi Configuration														
4100-003	--	1	--	Pi	125	50	3000	GMV	15	--	7	50	65	60
4101-505	/62-0003	13	--	Pi	--	70	1500	GMV	10	--	--	50	65	65
4151-000	--	3	--	Pi	100	70	12,000	GMV	10	--	25	70	65	65
4151-500	/62-0004	14	--	Pi	--	70	12,000	GMV	10	--	22	70	--	65
4151-001	--	5	--	Pi	100	70	22,000	GMV	10	--	35	70	70	70
4151-501	/51-0002	15	--	Pi	--	70	22,000	GMV	10	--	25	70	70	70
4151-003	--	12	--	Pi	100	70	60,000	GMV	10	--	60	75	75	75
4100-000	--	7	--	Pi	250	125	1500	GMV	10	--	6	45	60	60
4101-000	--	20	--	Pi	250	125	1750	GMV	10	--	5	35	50	50
4101-002	--	2	--	Pi	250	125	1750	GMV	10	--	5	50	60	60
4101-003	--	4	--	Pi	250	125	1750	GMV	10	--	5	50	60	60
4101-004	--	6	--	Pi	250	125	1750	GMV	10	--	5	50	60	60
4101-502	/33-0001	16	--	Pi	--	125dc 90ac	1750	GMV	10	--	--	50	60	60
4101-503	/33-0002	16	♦	Pi	--	125dc 90ac	1750	GMV	10	--	--	50	60	60
4101-500	/66-0001	8	--	Pi	--	125	1750	GMV	10	--	5	35	50	50
4100-056	--	9	--	Pi	250ac	200dc	1000	±20%	10	--	3	20	55	--
4100-002	--	1	--	Pi	350	200	1500	GMV	15	--	5	25	60	60
4101-001	--	17	--	Pi	350	200	1500	GMV	10	--	3	45	70	70
4101-501	/62-0001	17	--	Pi	--	200dc 140ac	1500	GMV	10	--	3	45	70	70
4100-500	/62-0002	18	♦	Pi	--	200	1500	GMV	10	--	5	45	70	--
4100-057	--	9	--	Pi	250ac	200dc	1500	GMV	10	--	5	45	70	--
4102-000	--	10	--	Pi	350	200	3000	GMV	10	--	8	55	65	65
4100-053	--	9	--	Pi	250ac	200dc	5000	GMV	10	--	18	60	70	--
4101-504	/51-0001	19	--	Pi	200dc 200ac	--	5500	GMV	10	--	15	55	70	70
4106-000	--	11	--	Pi	500dc 350ac	500dc 350ac	3000	GMV	25	--	--	50	50	50
4106-001	--	11	--	Pi	1000	500	4500	GMV	25	--	8	50	70	70

Drawings not to scale.

OCEAN CHIPS
Океан Электроники
Поставка электронных компонентов

Компания «Океан Электроники» предлагает заключение долгосрочных отношений при поставках импортных электронных компонентов на взаимовыгодных условиях!

Наши преимущества:

- Поставка оригинальных импортных электронных компонентов напрямую с производств Америки, Европы и Азии, а так же с крупнейших складов мира;
- Широкая линейка поставок активных и пассивных импортных электронных компонентов (более 30 млн. наименований);
- Поставка сложных, дефицитных, либо снятых с производства позиций;
- Оперативные сроки поставки под заказ (от 5 рабочих дней);
- Экспресс доставка в любую точку России;
- Помощь Конструкторского Отдела и консультации квалифицированных инженеров;
- Техническая поддержка проекта, помощь в подборе аналогов, поставка прототипов;
- Поставка электронных компонентов под контролем ВП;
- Система менеджмента качества сертифицирована по Международному стандарту ISO 9001;
- При необходимости вся продукция военного и аэрокосмического назначения проходит испытания и сертификацию в лаборатории (по согласованию с заказчиком);
- Поставка специализированных компонентов военного и аэрокосмического уровня качества (Xilinx, Altera, Analog Devices, Intersil, Interpoint, Microsemi, Actel, Aeroflex, Peregrine, VPT, Syfer, Eurofarad, Texas Instruments, MS Kennedy, Miteq, Cobham, E2V, MA-COM, Hittite, Mini-Circuits, General Dynamics и др.);

Компания «Океан Электроники» является официальным дистрибьютором и эксклюзивным представителем в России одного из крупнейших производителей разъемов военного и аэрокосмического назначения **«JONHON»**, а так же официальным дистрибьютором и эксклюзивным представителем в России производителя высокотехнологичных и надежных решений для передачи СВЧ сигналов **«FORSTAR»**.

AVIC JONHON

«JONHON» (основан в 1970 г.)

Разъемы специального, военного и аэрокосмического назначения:

(Применяются в военной, авиационной, аэрокосмической, морской, железнодорожной, горно- и нефтедобывающей отраслях промышленности)

«FORSTAR» (основан в 1998 г.)

ВЧ соединители, коаксиальные кабели, кабельные сборки и микроволновые компоненты:

(Применяются в телекоммуникациях гражданского и специального назначения, в средствах связи, РЛС, а так же военной, авиационной и аэрокосмической отраслях промышленности).

FORSTAR®

Телефон: 8 (812) 309-75-97 (многоканальный)
Факс: 8 (812) 320-03-32
Электронная почта: ocean@oceanchips.ru
Web: http://oceanchips.ru/
Адрес: 198099, г. Санкт-Петербург, ул. Калинина, д. 2, корп. 4, лит. А