COMPLEMENTARY PAIR SMALL SIGNAL TRANSISTOR IN SOT363

Description

This Bipolar Junction Transistor (BJT) is designed to meet the stringent requirements of Automotive Applications.

Features

- Epitaxial Die Construction
- Two Internally Isolated NPN/PNP Transistors in One Package
- Ideal for Medium Power Amplification and Switching
- Ultra-Small Surface Mount Package
- **Totally Lead-Free & Fully RoHS Compliant (Notes 1 & 2)**
- **Halogen and Antimony Free. "Green" Device (Note 3)**
- **Qualified to AEC-Q101 Standards for High Reliability**
- **PPAP Capable (Note 4)**

Mechanical Data

- Case: SOT363
- Case Material: Molded Plastic, “Green” Molding Compound. UL Flammability Classification Rating 94V-0
- Moisture Sensitivity: Level 1 per J-STD-020
- Terminals: Finish — Matte Tin Finish. Solderable per MIL-STD-202, Method 208 ⓔ3
- Weight: 0.006 grams (Approximate)

SOT363

Top View

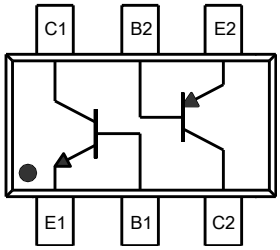

Device Schematic
Top View

Ordering Information (Notes 4 & 5)

Part Number	Compliance	Marking	Reel Size (inches)	Tape Width (mm)	Quantity per Reel
BC847PNQ-7-F	Automotive	K7P	7	8	3,000
BC847PNQ-7R-F	Automotive	K7P	7	8	3,000

Notes:
1. No purposely added lead. Fully EU Directive 2002/95/EC (RoHS) & 2011/65/EU (RoHS 2) compliant.
2. See http://www.diodes.com/quality/lead_free.html for more information about Diodes Incorporated’s definitions of Halogen- and Antimony-free, "Green" and Lead-free.
3. Halogen- and Antimony-free "Green” products are defined as those which contain <900ppm bromine, <900ppm chlorine (<1500ppm total Br + Cl) and <1000ppm antimony compounds.
4. Automotive products are AEC-Q101 qualified and are PPAP capable. Refer to http://www.diodes.com/product_compliance_definitions.html.
5. For packaging details, go to our website at http://www.diodes.com/products/packages.html.

Marking Information

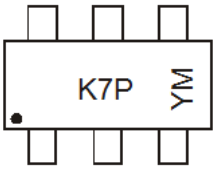

K7P = Product Type Marking Code
YM = Date Code Marking
Y = Year (ex: D = 2016)
M = Month (ex: 9 = September)

Date Code Key

Year	2015	2016	2017	2018	2019	2020	2021	2022
Code	C	D	E	F	G	H	I	J

Month	Jan	Feb	Mar	Apr	May	Jun	Jul	Aug	Sep	Oct	Nov	Dec
Code	1	2	3	4	5	6	7	8	9	O	N	D

© Diodes Incorporated

Absolute Maximum Ratings: NPN, BC847B Type (Q_1) (@T_A = +25°C, unless otherwise specified.)

Characteristic	Symbol	Value	Unit
Collector-Base Voltage	V_{CBO}	50	V
Collector-Emitter Voltage	V_{CEO}	45	V
Emitter-Base Voltage	V_{EBO}	6	V
Collector Current	I_C	100	mA
Peak Collector Current	I_{CM}	200	mA
Peak Emitter Current	I_{EM}	200	mA

Absolute Maximum Ratings: PNP, BC857B Type (Q_2) (@T_A = +25°C, unless otherwise specified.)

Characteristic	Symbol	Value	Unit
Collector-Base Voltage	V_{CBO}	-50	V
Collector-Emitter Voltage	V_{CEO}	-45	V
Emitter-Base Voltage	V_{EBO}	-6	V
Collector Current	I_C	-100	mA
Peak Collector Current	I_{CM}	-200	mA
Peak Emitter Current	I_{EM}	-200	mA

Thermal Characteristics – Total Device (@T_A = +25°C, unless otherwise specified.)

Characteristic	Symbol	Value	Unit
Power Dissipation (Note 6) Total Device	P_D	200	mW
Thermal Resistance, Junction to Ambient (Note 6)	$R_{\theta JA}$	625	°C/W
Operating and Storage Temperature Range	T_J, T_{STG}	-65 to +150	°C

Note: 6. For a device mounted on minimum recommended pad layout with 1oz copper that is on a single-sided 1.6mm FR-4 PCB; the device is measured under still air conditions whilst operating in a steady-state.

Thermal Characteristics – Total Device

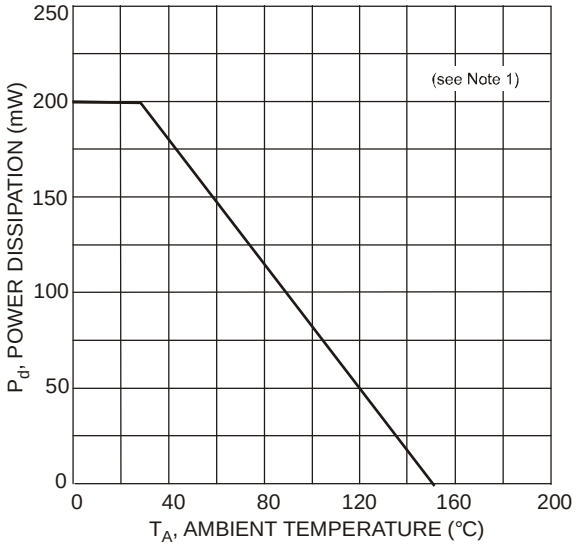

Fig. 1, Power Derating Curve (Total Device)

© Diodes Incorporated

Electrical Characteristics: NPN, BC847B Type (Q_1) (@T_A = +25°C, unless otherwise specified.)

Characteristic (Note 7)	Symbol	Min	Typ	Max	Unit	Test Condition
Collector-Base Breakdown Voltage	BV_{CBO}	50	—	—	V	I_C = 100µA
Collector-Emitter Breakdown Voltage	BV_{CEO}	45	—	—	V	I_C = 10mA
Emitter-Base Breakdown Voltage	BV_{EBO}	6	—	—	V	I_E = 100µA
DC Current Gain	h_{FE}	200	290	450	—	V_{CE} = 5.0V, I_C = 2.0mA
Collector-Emitter Saturation Voltage	$V_{CE(SAT)}$	—	90 200	250 600	mV	I_C = 10mA, I_B = 0.5mA I_C = 100mA, I_B = 5.0mA
Base-Emitter Saturation Voltage	$V_{BE(SAT)}$	—	700 900	—	mV	I_C = 10mA, I_B = 0.5mA I_C = 100mA, I_B = 5.0mA
Base-Emitter Voltage	$V_{BE(ON)}$	580 —	660 —	700 720	mV	V_{CE} = 5.0V, I_C = 2.0mA V_{CE} = 5.0V, I_C = 10mA
Collector-Cutoff Current	I_{CBO}	— —	— —	15 5.0	nA µA	V_{CB} = 30V V_{CB} = 30V, T_A = +150°C
Gain Bandwidth Product	f_T	100	300	—	MHz	V_{CE} = 5.0V, I_C = 10mA, f = 100MHz
Collector-Base Capacitance	C_{CBO}	—	3.5	6.0	pF	V_{CB} = 10V, f = 1.0MHz
Noise Figure	NF	—	2.0	10	dB	V_{CE} = 5V, I_C = 200µA, R_g = 2.0kΩ, f = 1.0kHz, Δf = 200Hz

Note: 7. Short duration pulse test used to minimize self-heating effect.

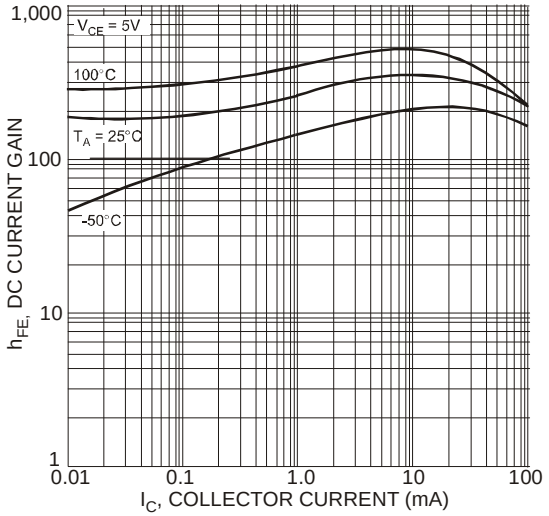

Figure 2. Typical DC Current Gain vs. Collector Current (BC847B Type)

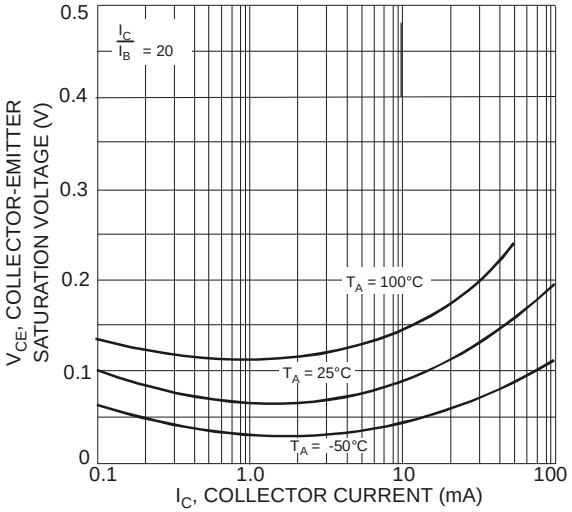

Figure 3. Typical Collector-Emitter Saturation Voltage vs. Collector Current (BC847B Type)

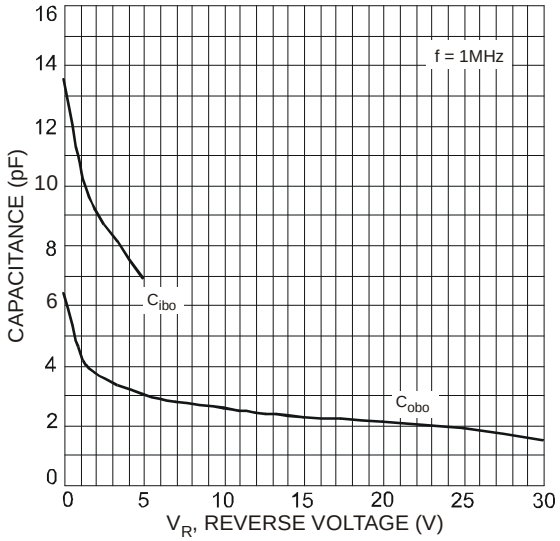

Figure 4. Typical Capacitance Characteristics (BC847B Type)

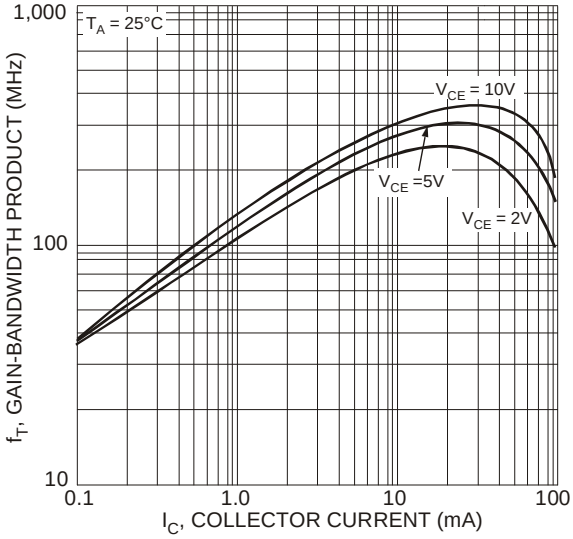

Figure 5. Typical Gain-Bandwidth Product vs. Collector Current (BC847B Type)

© Diodes Incorporated

Electrical Characteristics: PNP, BC857B Type (Q_2) (@T_A = +25°C unless otherwise specified.)

Characteristic (Note 8)	Symbol	Min	Typ	Max	Unit	Test Condition
Collector-Base Breakdown Voltage	BV_{CBO}	-50	—	—	V	I_C = -100µA
Collector-Emitter Breakdown Voltage	BV_{CEO}	-45	—	—	V	I_C = -10mA
Emitter-Base Breakdown Voltage	BV_{EBO}	-6	—	—	V	I_E = -100µA
DC Current Gain	h_{FE}	220	290	475	—	V_{CE} = -5.0V, I_C = -2.0mA
Collector-Emitter Saturation Voltage	$V_{CE(SAT)}$	—	-75 -250	-300 -650	mV	I_C = -10mA, I_B = -0.5mA I_C = -100mA, I_B = -5.0mA
Base-Emitter Saturation Voltage	$V_{BE(SAT)}$	—	-700 -850	— -950	mV	I_C = -10mA, I_B = -0.5mA I_C = -100mA, I_B = -5.0mA
Base-Emitter Voltage	$V_{BE(ON)}$	-600 —	-650 —	-750 -820	mV	V_{CE} = -5.0V, I_C = -2.0mA V_{CE} = -5.0V, I_C = -10mA
Collector-Cutoff Current	I_{CBO}	— —	— —	-15 -4.0	nA µA	V_{CB} = -30V V_{CB} = -30V, T_A = +150°C
Gain Bandwidth Product	f_T	100	200	—	MHz	V_{CE} = -5.0V, I_C = -10mA, f = 100MHz
Collector-Base Capacitance	C_{CBO}	—	3	4.5	pF	V_{CB} = -10V, f = 1.0MHz
Noise Figure	NF	—	—	10	dB	V_{CE} = -5V, I_C = -200µA, R_g = 2.0kΩ, f = 1.0kHz, Δf = 200Hz

Note: 8. Short duration pulse test used to minimize self-heating effect.

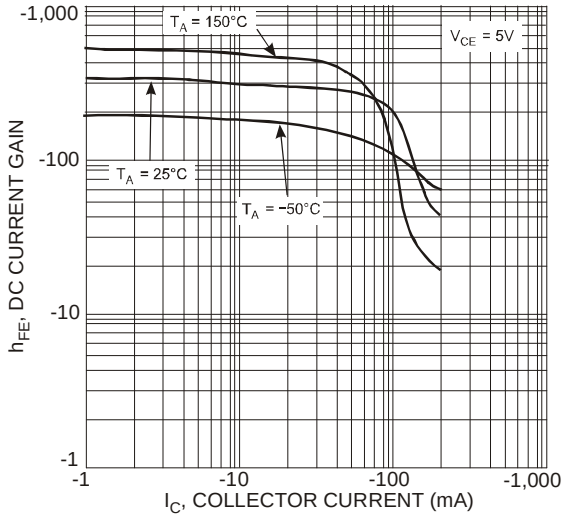

Figure 6. Typical DC Current Gain vs. Collector Current (BC857B Type)

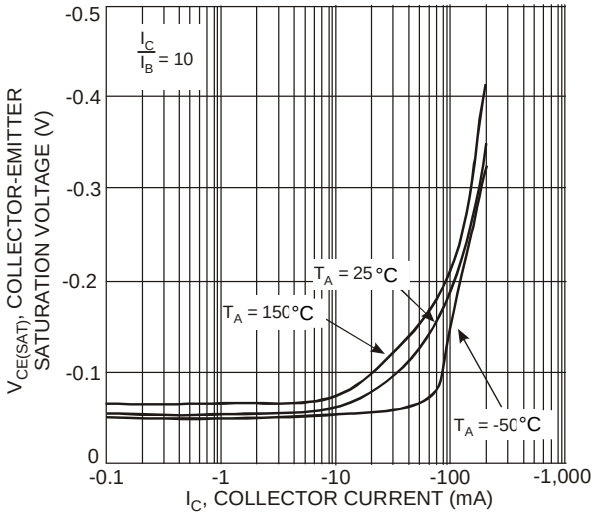

Figure 7. Typical Collector-Emitter Saturation Voltage vs. Collector Current (BC857B Type)

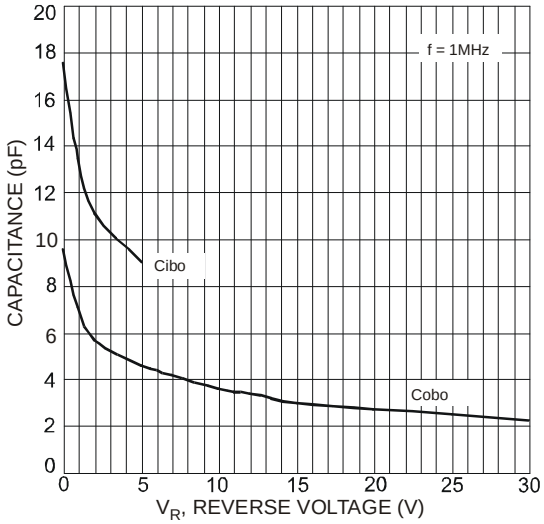

Figure 8. Typical Capacitance Characteristics (BC857B Type)

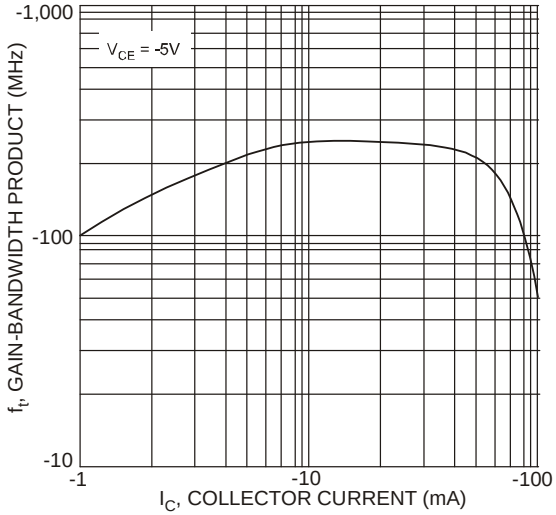

Figure 9. Typical Gain-Bandwidth Product vs. Collector Current (BC857B Type)

© Diodes Incorporated

Package Outline Dimensions

Please see http://www.diodes.com/package-outlines.html for the latest version.

SOT363

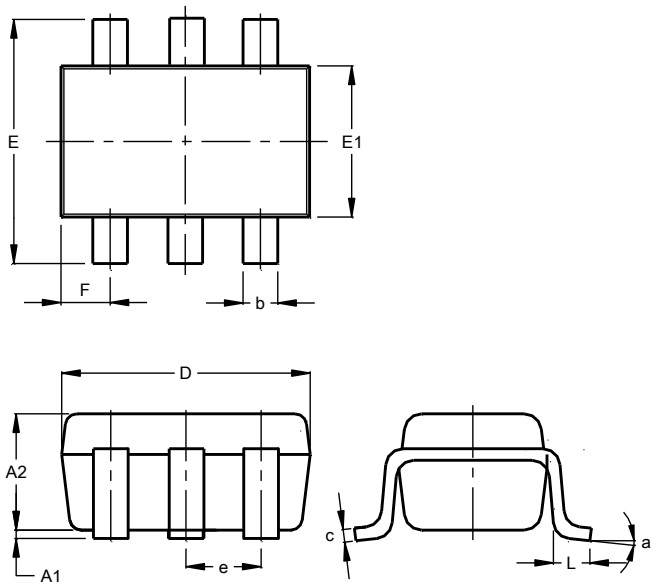

SOT363			
Dim	**Min**	**Max**	**Typ**
A1	0.00	0.10	0.05
A2	0.90	1.00	1.00
b	0.10	0.30	0.25
c	0.10	0.22	0.11
D	1.80	2.20	2.15
E	2.00	2.20	2.10
E1	1.15	1.35	1.30
e	0.650 BSC		
F	0.40	0.45	0.425
L	0.25	0.40	0.30
a	0°	8°	--
All Dimensions in mm			

Suggested Pad Layout

Please see http://www.diodes.com/package-outlines.html for the latest version.

SOT363

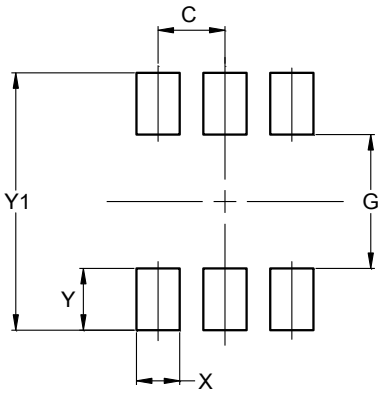

Dimensions	Value (in mm)
C	0.650
G	1.300
X	0.420
Y	0.600
Y1	2.500

© Diodes Incorporated

IMPORTANT NOTICE

DIODES INCORPORATED MAKES NO WARRANTY OF ANY KIND, EXPRESS OR IMPLIED, WITH REGARDS TO THIS DOCUMENT, INCLUDING, BUT NOT LIMITED TO, THE IMPLIED WARRANTIES OF MERCHANTABILITY AND FITNESS FOR A PARTICULAR PURPOSE (AND THEIR EQUIVALENTS UNDER THE LAWS OF ANY JURISDICTION).

Diodes Incorporated and its subsidiaries reserve the right to make modifications, enhancements, improvements, corrections or other changes without further notice to this document and any product described herein. Diodes Incorporated does not assume any liability arising out of the application or use of this document or any product described herein; neither does Diodes Incorporated convey any license under its patent or trademark rights, nor the rights of others. Any Customer or user of this document or products described herein in such applications shall assume all risks of such use and will agree to hold Diodes Incorporated and all the companies whose products are represented on Diodes Incorporated website, harmless against all damages.

Diodes Incorporated does not warrant or accept any liability whatsoever in respect of any products purchased through unauthorized sales channel. Should Customers purchase or use Diodes Incorporated products for any unintended or unauthorized application, Customers shall indemnify and hold Diodes Incorporated and its representatives harmless against all claims, damages, expenses, and attorney fees arising out of, directly or indirectly, any claim of personal injury or death associated with such unintended or unauthorized application.

Products described herein may be covered by one or more United States, international or foreign patents pending. Product names and markings noted herein may also be covered by one or more United States, international or foreign trademarks.

This document is written in English but may be translated into multiple languages for reference. Only the English version of this document is the final and determinative format released by Diodes Incorporated.

LIFE SUPPORT

Diodes Incorporated products are specifically not authorized for use as critical components in life support devices or systems without the express written approval of the Chief Executive Officer of Diodes Incorporated. As used herein:

A. Life support devices or systems are devices or systems which:

1. are intended to implant into the body, or
2. support or sustain life and whose failure to perform when properly used in accordance with instructions for use provided in the labeling can be reasonably expected to result in significant injury to the user.

B. A critical component is any component in a life support device or system whose failure to perform can be reasonably expected to cause the failure of the life support device or to affect its safety or effectiveness.

Customers represent that they have all necessary expertise in the safety and regulatory ramifications of their life support devices or systems, and acknowledge and agree that they are solely responsible for all legal, regulatory and safety-related requirements concerning their products and any use of Diodes Incorporated products in such safety-critical, life support devices or systems, notwithstanding any devices or systems-related information or support that may be provided by Diodes Incorporated. Further, Customers must fully indemnify Diodes Incorporated and its representatives against any damages arising out of the use of Diodes Incorporated products in such safety-critical, life support devices or systems.

Copyright © 2016, Diodes Incorporated

www.diodes.com

OCEAN CHIPS
Океан Электроники
Поставка электронных компонентов

Компания «Океан Электроники» предлагает заключение долгосрочных отношений при поставках импортных электронных компонентов на взаимовыгодных условиях!

Наши преимущества:

- Поставка оригинальных импортных электронных компонентов напрямую с производств Америки, Европы и Азии, а так же с крупнейших складов мира;
- Широкая линейка поставок активных и пассивных импортных электронных компонентов (более 30 млн. наименований);
- Поставка сложных, дефицитных, либо снятых с производства позиций;
- Оперативные сроки поставки под заказ (от 5 рабочих дней);
- Экспресс доставка в любую точку России;
- Помощь Конструкторского Отдела и консультации квалифицированных инженеров;
- Техническая поддержка проекта, помощь в подборе аналогов, поставка прототипов;
- Поставка электронных компонентов под контролем ВП;
- Система менеджмента качества сертифицирована по Международному стандарту ISO 9001;
- При необходимости вся продукция военного и аэрокосмического назначения проходит испытания и сертификацию в лаборатории (по согласованию с заказчиком);
- Поставка специализированных компонентов военного и аэрокосмического уровня качества (Xilinx, Altera, Analog Devices, Intersil, Interpoint, Microsemi, Actel, Aeroflex, Peregrine, VPT, Syfer, Eurofarad, Texas Instruments, MS Kennedy, Miteq, Cobham, E2V, MA-COM, Hittite, Mini-Circuits, General Dynamics и др.);

Компания «Океан Электроники» является официальным дистрибьютором и эксклюзивным представителем в России одного из крупнейших производителей разъемов военного и аэрокосмического назначения **«JONHON»**, а так же официальным дистрибьютором и эксклюзивным представителем в России производителя высокотехнологичных и надежных решений для передачи СВЧ сигналов **«FORSTAR»**.

AVIC JONHON

«JONHON» (основан в 1970 г.)

Разъемы специального, военного и аэрокосмического назначения:

(Применяются в военной, авиационной, аэрокосмической, морской, железнодорожной, горно- и нефтедобывающей отраслях промышленности)

«FORSTAR» (основан в 1998 г.)

ВЧ соединители, коаксиальные кабели, кабельные сборки и микроволновые компоненты:

(Применяются в телекоммуникациях гражданского и специального назначения, в средствах связи, РЛС, а так же военной, авиационной и аэрокосмической отраслях промышленности).

FORSTAR®

Телефон: 8 (812) 309-75-97 (многоканальный)
Факс: 8 (812) 320-03-32
Электронная почта: ocean@oceanchips.ru
Web: http://oceanchips.ru/
Адрес: 198099, г. Санкт-Петербург, ул. Калинина, д. 2, корп. 4, лит. А