MTCH112

Dual-Channel Proximity/Touch Controller

Features:

- Capacitive Proximity Detection System:
  - High Signal to Noise Ratio (SNR)
  - Adjustable sensitivity
  - Noise Rejection Filters
  - Scanning method actively optimized to attenuate strongest noise frequencies
  - Automatic calibration with optional user presets
  - Dynamic threshold management adjusts sensitivity of sensor based on the level of environmental noise
  - Constant press calibration tracks the expected offset when the sensor is pressed and adjusts the threshold to automatically achieve the best press/release behavior
  - User-defined “minimum shift” values specify the lowest amount of signal change to activate a state transition. Automatic thresholds never decrease below these settings.
  - Automatic Environmental Compensation
  - Stuck release mechanism
- No Required External Components
- Low-Power mode: Highly Configurable Low-Power mode
  - 1 ms to 4s Sleep interval between sensor samples
- Response Time as Low as 10 ms
- Hardware Error Detection notifies if either sensor is shorted to VDD, VSS or the other sensor
- Operating Voltage Range:
  - 1.8V to 3.3V
- Operating Temperature:
  - 40°C to +85°C

Package Type

The device is available in 8-lead SOIC and DFN packaging (see Figure 1).

FIGURE 1: 8-PIN DIAGRAM FOR MTCH112

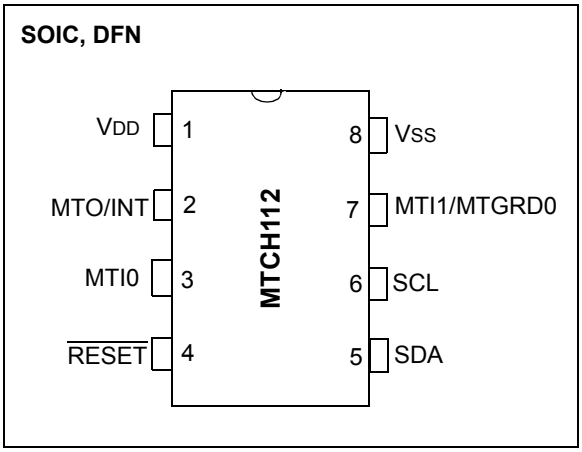

TABLE 1: 8-PIN SOIC/DFN PINOUT DESCRIPTION

I/O	8-Pin SOIC/DFN	Description
VDD	1	Power Supply Input
MTO/INT	2	Detect Output (Active-Low) Notification Interrupt Pin
MTI0	3	Proximity/Touch Sensor Input
$\overline{\text{RESET}}$	4	Device Reset (Active-Low)
SDA	5	I^2C™ Data
SCL	6	I^2C™ Clock
MTI1/MTGRD0	7	Proximity/Touch Sensor Input Active Guard Shield for MTI0
VSS	8	Ground Reference

© 2012 Microchip Technology Inc.

Table of Contents

1.0 Device Overview 3
2.0 I²C™ Serial Interface 6
3.0 Configuration Registers 13
4.0 Electrical Characteristics 25
5.0 Packaging Information 34
Index 42
The Microchip Web Site 43
Customer Change Notification Service 43
Customer Support 43
Reader Response 44
Product Identification System 45

TO OUR VALUED CUSTOMERS

It is our intention to provide our valued customers with the best documentation possible to ensure successful use of your Microchip products. To this end, we will continue to improve our publications to better suit your needs. Our publications will be refined and enhanced as new volumes and updates are introduced.

If you have any questions or comments regarding this publication, please contact the Marketing Communications Department via E-mail at **docerrors@microchip.com** or fax the **Reader Response Form** in the back of this data sheet to (480) 792-4150. We welcome your feedback.

Most Current Data Sheet

To obtain the most up-to-date version of this data sheet, please register at our Worldwide Web site at:

http://www.microchip.com

You can determine the version of a data sheet by examining its literature number found on the bottom outside corner of any page. The last character of the literature number is the version number, (e.g., DS30000A is version A of document DS30000).

Errata

An errata sheet, describing minor operational differences from the data sheet and recommended workarounds, may exist for current devices. As device/documentation issues become known to us, we will publish an errata sheet. The errata will specify the revision of silicon and revision of document to which it applies.

To determine if an errata sheet exists for a particular device, please check with one of the following:

- Microchip's Worldwide Web site; **http://www.microchip.com**
- Your local Microchip sales office (see last page)

When contacting a sales office, please specify which device, revision of silicon and data sheet (include literature number) you are using.

Customer Notification System

Register on our web site at **www.microchip.com** to receive the most current information on all of our products.

 © 2012 Microchip Technology Inc.

1.0 DEVICE OVERVIEW

The Microchip mTouch™ sensing MTCH112 Dual-Channel Proximity/Touch Controller provides an easy way to add proximity and/or touch sensor detection to any application. The device implements either two capacitive sensors or one sensor and one active guard driver. The optional device configuration through I^{2}C™ allows presets to be loaded in a production environment. Automatic calibration routines are used by default to choose the best options, so user configuration is not required.

The MTCH112 uses a sophisticated optimization algorithm to actively eliminate noise from the signal. While the noise level is being measured, the requirements for a proximity or touch detection are updated to reflect the degree of uncertainty in the readings. When a press is detected for the first time, the threshold is automatically calibrated to choose a smart threshold for the 'release' and next press. This creates a system that dynamically optimizes the signal-to-noise ratio for its environment.

1.1 Automatic Calibration

It measures the amount of capacitance on each sensor pin and chooses the best of three possible waveforms to capture a capacitive measurement.

It analyzes the two final settling voltages of the MTI0 pin to more closely match the waveform on the MTGRD0 pin.

The settling time for the waveform is calibrated to maximize sensitivity while minimizing the delay. This provides the best trade-off between signal and noise reduction.

Calibration results are stored in the on-board EEPROM for faster recovery time on next power-up. These memory locations are accessible for read/write through the I^{2}C communications to bypass the automatic calibration, if required.

1.2 Communications

- I^{2}C, Slave mode

1.3 Touch Configurations

- MTI0 is a dedicated capacitive sensor input
- MTI1/MTGRD0 can either be another capacitive sensor or a guard driver for MTI0

1.4 Signal Resolution

- 13 bits

1.5 Pin Description

1.5.1 MTI0/MTI1

Connect the sensor to this input. An additional resistor of at least 4.7 kΩ is recommended for best noise immunity. Sensors up to 40 pF in capacitance are supported. Sensors work best when the base capacitance is minimized. This will maximize the percentage change in capacitance when a finger is added to the circuit.

1.5.2 MTGRD0

When not scanning the pin for capacitance changes (MTI1 functionality), the pin will be driven in phase with MTI0 to minimize the voltage differential between the two pins. If the MTGRD0 pin's trace surrounds the MTI0 pin's trace, the waveform on MTGRD0 will shield (or guard) MTI0 from the effect of nearby noise sources or power planes.

1.5.3 MTO

The mTouch™ sensing output pin is always driven to either V_{DD} or V_{SS} by the device. The MTCH112 OUTCON register (see Register 3-1) determines the behavior of the MTO/INT pin. The pin is always active-low, but the states in which this output occurs can be adjusted in the device's OUTCON register. If no options are selected for output states, the MTO pin acts as an interrupt to a master device. The MTCH112 will pulse low for at least 1 ms if any state changes occur. Further information must be determined by communicating through I^{2}C with the device.

1.5.4 I^{2}C – SERIAL DATA PIN (SDA)

The SDA pin is the serial data pin of the I^{2}C interface. The SDA pin is used to write or read the registers and Configuration bits. The SDA pin is an open-drain N-channel driver. Therefore, it needs an external pull-up resistor from the V_{DD} line to the SDA pin. The recommended resistance value is 1.5 kΩ. Except for Start and Stop conditions, the data on the SDA pin must be stable during the high period of the clock. The high or low state of the SDA pin can only change when the clock signal on the SCL pin is low. Refer to **Section 2.1.2 "I2C Operation"** for more details on I^{2}C Serial Interface communication.

1.5.5 I²C – SERIAL CLOCK PIN (SCL)

The SCL pin is the serial clock pin of the I²C interface. The I²C interface only acts as a slave and the SCL pin accepts only external serial clocks. The input data from the master device is shifted into the SDA pin on the rising edges of the SCL clock, and output from the device occurs at the falling edges of the SCL clock. The SCL pin is an open-drain N-channel driver. Therefore, it needs an external pull-up resistor from the V_{DD} line to the SCL pin. The recommended resistance value is 1.5 kΩ. Refer to **Section 2.1.2 "I2C Operation"** for more details on I²C Serial Interface communication.

For more details, see Figure 1 and Table 1.

1.6 Performance

1.6.1 PROXIMITY DISTANCE

The maximum proximity distance will be highly dependent on the level of noise in the environment. To maximize the robustness of the controller, the noise level is measured and used to define how much shift is required in the signal before a reliable change in state can be determined. These values were taken in a low-noise environment. For more details, see Figure 4-2.

1.6.2 RESPONSE TIME

The response time is defined as the maximum amount of time delay between the sensor's capacitance significantly changing and the output being updated based on the OUTCON register's configuration.

This amount of time will be dependent on the LPCON register, as it determines how long the device will sleep after detecting no significant changes. The fastest response time can be achieved by setting the LPCON register for the minimum Sleep time (see Register 3-6). The controller only sleeps when idle and no changes in the environment are detected. If a change occurs, the device will operate without sleeping until the disturbance or capacitance is removed. For more details, see Table 4-2.

1.6.3 HARDWARE

Capacitive sensors are areas of metal connected through a series resistor of 4.7 kΩ to one of the MTIx pins. The following diagrams show some example layout configurations along with the recommended design guidelines. For more information about the design of capacitive sensors, see AN1334, "*Techniques for Robust Touch Sensing Design*".

FIGURE 1-1: TWO-SENSOR LAYOUTS — EXAMPLE

Single Layer PCB, Two Sensors

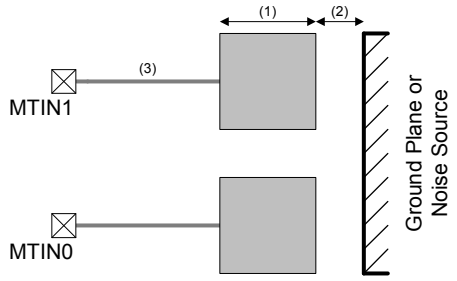

NOTE: **1:** 15 mm x 15 mm recommended.
2: Maximize separation distance.
3: Thickness of traces to pin: 0.1 – 0.5 mm

Two Layer PCB, Two Sensors

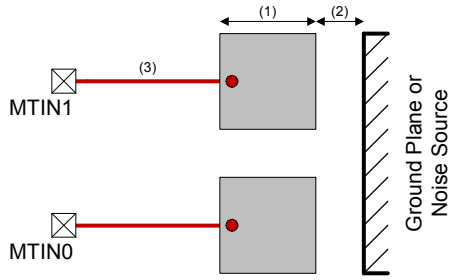

NOTE: **1:** 15 mm x 15 mm recommended.
2: Maximize separation distance.
3: Thickness of traces to pin: 0.1 – 0.5 mm

 © 2012 Microchip Technology Inc.

FIGURE 1-2: GUARD LAYOUTS — EXAMPLE

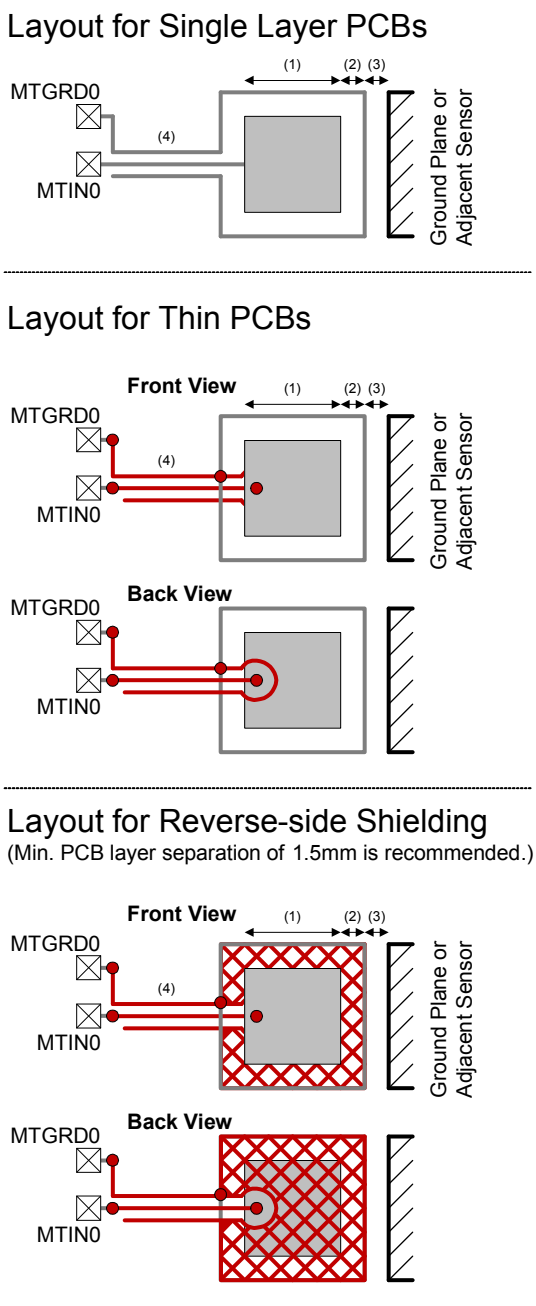

NOTE:
1: 15 mm x 15 mm recommended.
2: >2 mm separation recommended.
3: >2 mm separation recommended.
4: Thickness of traces to pin: 0.1 – 0.5 mm
>0.5 mm separation recommended.
5: Thickness of guard around sensor: 1 mm

2.0 I²C™ SERIAL INTERFACE

This device supports the I²C serial protocol. The I²C module operates in Slave mode, so it does not generate the serial clock.

2.1 Overview

This I²C interface is a two-wire interface. Figure 2-1 shows a typical I²C Interface connection.

The I²C interface specifies different communication bit rates. These are referred to as Standard, Fast or High Speed modes. The MTCH112 device supports these three modes. The bit rates of these modes are:

- Standard Mode: Bit Rates up to 100 kbit/s
- Fast Mode: Bit Rates up to 400 kbit/s

A device that sends data onto the bus is defined as a transmitter, and a device receiving data is defined as a receiver. The bus has to be controlled by a master device which generates the serial clock (SCL), controls the bus access and generates the Start and Stop conditions. The MTCH112 device works as slave. Both master and slave can operate as transmitter or receiver, but the master device determines which mode is activated. Communication is initiated by the master (microcontroller) which sends the Start bit, followed by the slave address byte. The first byte transmitted is always the slave address byte, which contains the device code, the address bits and the R/$\overline{W}$ bit.

FIGURE 2-1: TYPICAL I²C™ INTERFACE

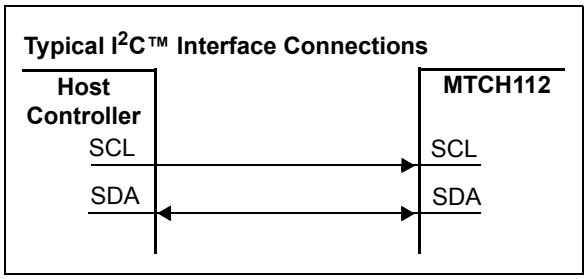

The I²C serial protocol only defines the field types, field lengths, timings, etc. of a frame. The frame content defines the behavior of the device. For details on the frame content (commands/data) refer to **Section 2.3 "I2C Commands"**.

Refer to the *NXP User Manual* (UM10204_3) for more details on the I²C specifications.

There was some concern as to the use of the Acknowledge bit to indicate a command error condition. From Section 3.6 of the *NXP User Manual (UM10204_3, Rev 03 - 19 June 2007)*, the description states:

"*The acknowledge takes place after every byte. The Acknowledge bit allows the receiver to signal the transmitter that the byte was successfully received and another byte may be sent. All clock pulses including the acknowledge 9th clock pulse are generated by the master.*"

From this we can state that the byte was not "*successfully received*" since it is an invalid combination of Address/Command.

2.1.1 SIGNAL DESCRIPTIONS

The I²C interface uses up to two pins (signals). These are:

- SDA (Serial Data) (see **Section 1.5.4 "I2C – Serial Data Pin (SDA)"**)
- SCL (Serial Clock) (see **Section 1.5.5 "I2C – Serial Clock Pin (SCL)"**)

2.1.2 I²C OPERATION

The MTCH112 device I²C module is compatible with the NXP I²C specification. The following lists some of the module's features:

- 7-bit Slave Addressing
- Supports Two Clock Rate modes:
  - Standard mode, clock rates up to 100 kHz
  - Fast mode, clock rates up to 400 kHz
- Support Multi-Master Applications

The I²C 10-bit addressing mode is not supported.

The NXP I²C specification only defines the field types, field lengths, timings, etc. of a frame. The frame content defines the behavior of the device. The frame content for this device is defined in **Section 2.3 "I2C Commands"**.

I²C BIT STATES AND SEQUENCE

Figure 2-7 shows an I²C 8-bit transfer sequence, while Figure 2-8 shows the bit definitions. The serial clock is generated by the master. The following definitions are used for the bit states:

- Start bit (S)
- Data bit
- Acknowledge (A) bit (driven low) /
  No Acknowledge ($\overline{A}$) bit (not driven low)
- Repeated Start bit (Sr)
- Stop bit (P)

START BIT

The Start bit (see Figure 2-2) indicates the beginning of a data transfer sequence. The Start bit is defined as the SDA signal falling when the SCL signal is high.

FIGURE 2-2: START BIT

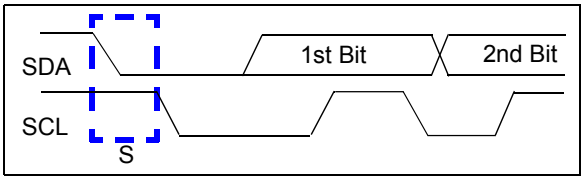

 © 2012 Microchip Technology Inc.

DATA BIT

The SDA signal may change state while the SCL signal is low. While the SCL signal is high, the SDA signal MUST be stable (see Figure 2-3).

FIGURE 2-3: DATA BIT

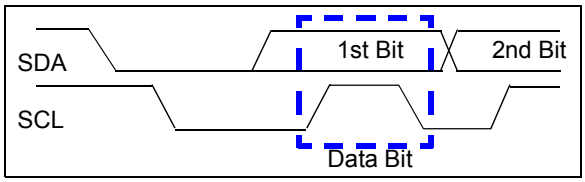

ACKNOWLEDGE (A) BIT

The A bit (see Figure 2-4) is typically a response from the receiving device to the transmitting device. Depending on the context of the transfer sequence, the A bit may indicate different things. Typically, the slave device will supply an A response after the Start bit and 8 data bits have been received. An A bit has the SDA signal low.

FIGURE 2-4: ACKNOWLEDGE WAVEFORM

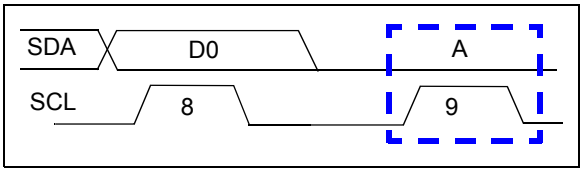

Not A ($\overline{A}$) Response

The $\overline{A}$ bit has the SDA signal high. Table 2-1 shows some of the conditions where the slave device will issue a Not A ($\overline{A}$).

If an error condition occurs (such as an $\overline{A}$ instead of A), then a Start bit must be issued to reset the command state machine.

TABLE 2-1: MTCH112 A / $\overline{A}$ RESPONSES

Event	Acknowledge Bit Response	Comment
General Call	$\overline{A}$	
Slave Address valid	A	
Slave Address not valid	$\overline{A}$	
Communication during EEPROM Write cycle	$\overline{A}$	The device will NACK after a valid write sequence until all bytes are executed.
Bus Collision	N/A	Treated as “Don’t Care” if the collision occurs on the Start bit. Otherwise, I^2C™ resets.

REPEATED START BIT

The Repeated Start bit (see Figure 2-5) indicates that the current master device wishes to continue communicating with the current slave device without releasing the I²C bus. The Repeated Start condition is the same as the Start condition, except that the Repeated Start bit follows a Start bit (with the data bits + A bit) and not a Stop bit.

The Start bit is the beginning of a data transfer sequence and is defined as the SDA signal falling when the SCL signal is high.

Note 1: A bus collision during the Repeated Start condition occurs if:

- SDA is sampled low when SCL goes from low-to-high.
- SCL goes low before SDA is asserted low. This may indicate that another master is attempting to transmit a data "1".

FIGURE 2-5: REPEAT START CONDITION WAVEFORM

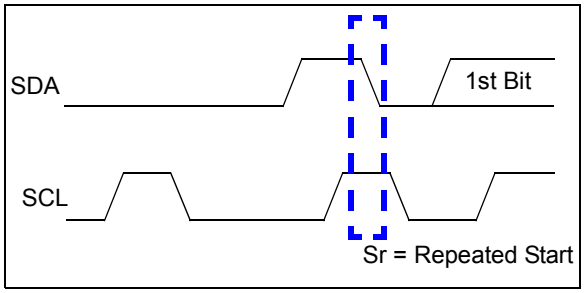

STOP BIT

The Stop bit (see Figure 2-6) indicates the end of the I²C data transfer sequence. The Stop bit is defined as the SDA signal rising when the SCL signal is high.

A Stop bit resets the I²C interface of the MTCH112 device.

FIGURE 2-6: STOP CONDITION RECEIVE OR TRANSMIT MODE

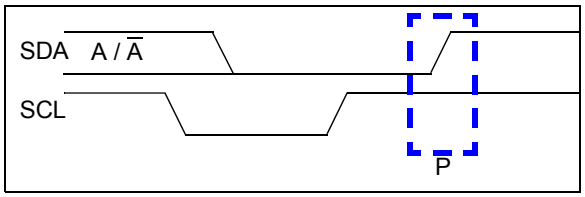

2.1.2.1 Clock Stretching

Clock stretching is something that the receiving device can do to allow additional time to respond to the data that has been received.

This device will stretch the clock signal (SCL) after a Write command to allow the EEPROM write operation to complete.

2.1.2.2 Aborting a Transmission

If any part of the I²C transmission does not meet the command format, it is aborted. This can be intentionally accomplished with a Start or Stop condition. This is done so that noisy transmissions (usually an extra Start or Stop condition) are aborted before they corrupt the device.

FIGURE 2-7: TYPICAL 8-BIT I²C™ WAVEFORM FORMAT

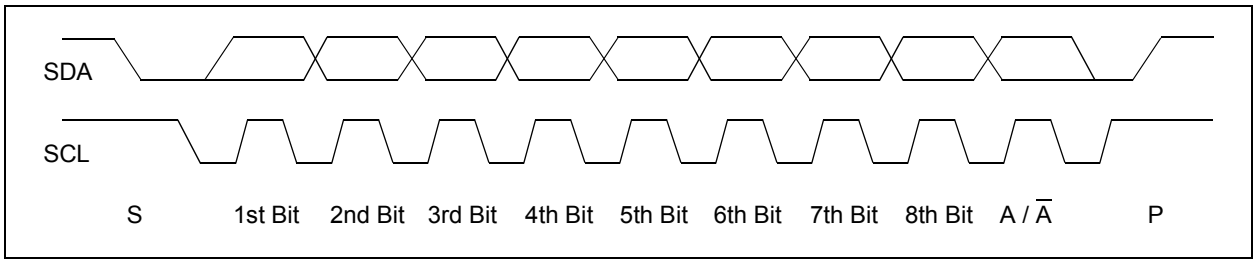

FIGURE 2-8: I²C™ DATA STATES AND BIT SEQUENCE

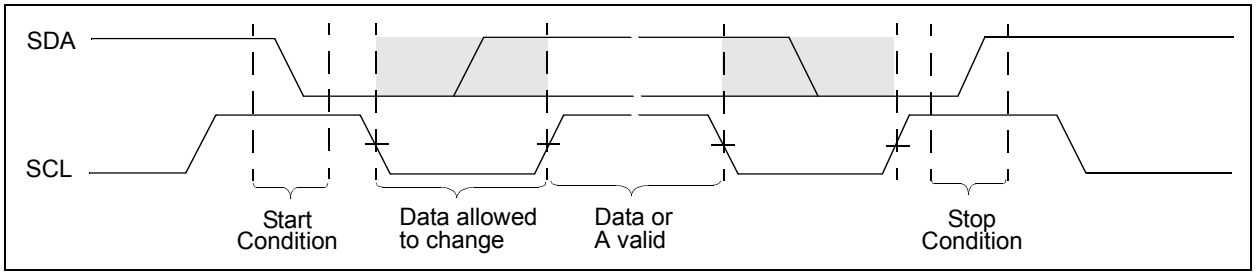

 © 2012 Microchip Technology Inc.

2.1.2.3 Slope Control

This device does not implement slope control on the SDA output.

2.1.2.4 Device Addressing

The address byte is the first byte received following the Start condition from the master device. The full 7 bits of the I^2C slave address is user programmable. The default address is "`1110011`".

Figure 2-9 shows the I^2C slave address byte format, which contains the seven address bits and a Read/Write (R/$\overline{W}$) bit.

FIGURE 2-9: SLAVE ADDRESS BITS IN THE I^2C™ CONTROL BYTE

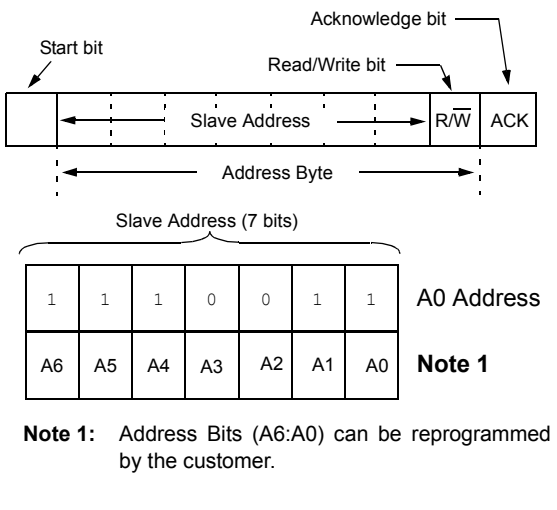

Note 1: Address Bits (A6:A0) can be reprogrammed by the customer.

2.2 Device Commands

This section documents the commands that the device supports.

The commands can be grouped into the following categories:

- Write Memory
- Read Memory

TABLE 2-2: RESET TO FACTORY SETTINGS

Desc.	Start	Device	Write Protection		Reset Command		Checksum(1)	Stop
Example	S	0xE6	0x55	0xAA	0x00	0xFF	0x00	P
Notes	—	Write	Required		Factory Settings		—	—

Note 1: Checksum is the binary XOR of all bytes except the device address.

TABLE 2-3: WRITE TO REGISTER

Desc.	Start	Device	Write Protection		Register	Value	Checksum(1)	Stop
Example	S	0xE6	0x55	0xAA	0x01	0x01	0xFF	P
Notes	—	Write	Required		OUTCON	—	—	—

Note 1: Checksum is the binary XOR of all bytes except the device address.

TABLE 2-4: READ FROM REGISTER

Desc.	Start	Device	Register	Restart	Device	Data	Stop	Start	Device	Checksum(1)	Stop
Example	S	0xE6	0x80	S	0xE7	—	P	S	0xE7	0xZZ	P
Notes		Write	STATE		Read	—			Read	—	

Note 1: Read checksum is the binary XOR of all bytes in the Data column. This is an optional step. The checksum can be ignored if the master does not wish to read it.

 © 2012 Microchip Technology Inc.

2.3 I²C COMMANDS

The I²C protocol does not specify how commands are formatted, so this section specifies the MTCH112 device's I²C command formats and operation.

The commands can be grouped into the following categories:

- Write Commands
- Read Commands

The supported commands are shown in Table 2-2, Table 2-3 and Table 2-4.

2.3.1 WRITE COMMANDS

Write commands are used to transfer data to the desired memory location (from the Host controller). The Write command form writes the device address, 0x55, 0xAA, the data address, the value to write and an XOR checksum.

2.3.2 READ COMMANDS

The Read command format writes two bytes, the control byte and the desired memory address byte, and then has a Restart condition. Then a second control byte is transmitted, but this control byte indicates a I²C read operation (R/$\overline{W}$ bit = `1`).

2.3.3 RESET TO FACTORY SETTINGS COMMAND

Resetting the device to factory settings is equivalent to writing the value 0xFF to the data address `0x00`. The proper write protocol must be followed, including the address byte with the Write bit set, 0x55, 0xAA and a binary XOR checksum at the end.

2.3.4 ABORTING A COMMAND TRANSMISSION

A Restart or Stop condition in an expected data bit position will abort the current command sequence and data will not be written to the MTCH112. Write commands are automatically aborted if the binary XOR checksum is not valid.

2.3.5 WRITE COMMAND (NORMAL AND HIGH VOLTAGE)

The format of the command is shown in Figure 2-10. The MTCH112 generates the A/$\overline{A}$ bits.

A Write command will only start a Write cycle after a properly formatted Write command has been received and the Stop condition has occurred.

2.3.5.1 Writing to Memory

The protocol allows for a variable number of bytes to be written to the device at a time. Once the Stop bit has been sent, a time delay is required while the EEPROM write cycle stores each data byte. While the device is writing the EEPROM, the address will be changed (by toggling the Least Significant address bit of the device, then toggling back once finished) to prevent accidental double writes. An error may occur if a Write command is sent while the EEPROM is still storing the previous bytes. While the writing is being performed, reads to the normal device address will result in a NACK.

Figure 2-10 shows the waveform for a single write.

FIGURE 2-10: WRITE RANDOM ADDRESS COMMAND

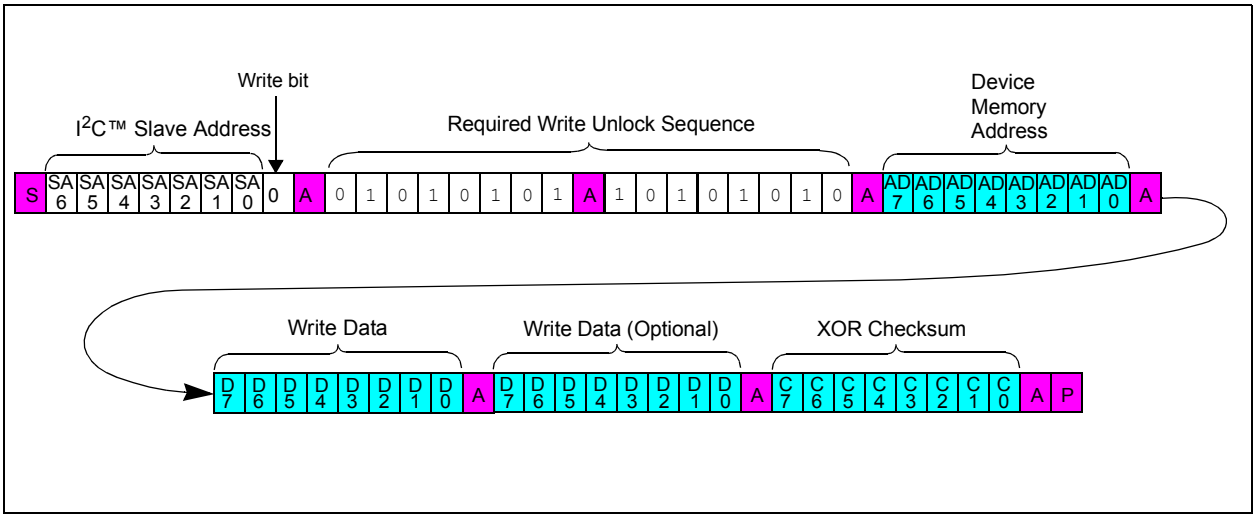

2.3.6 READ COMMAND

The Read command can be issued to all memory locations. The format of the command (see Figure 2-11) includes the Start condition, I²C control byte (with R/$\overline{W}$ bit set to 0), A bit, the data address byte, A bit, followed by a Repeated Start bit, I²C control byte (with R/$\overline{W}$ bit set to 1) and the MTCH112 device transmitting the requested data bytes one at a time until the master sends a Stop condition.

The I²C control byte requires the R/$\overline{W}$ bit equal to a logic one (R/$\overline{W}$ = 1) to generate a read sequence. The memory location read will start at the requested data address and automatically increments by one after each byte request. Notice that the read operation packets do not include the 0x55 and 0xAA Write protection bytes.

After the Stop condition has been received, if a Start condition is followed by the device address, the device will send the XOR checksum of the data bytes from the previous read packet. This allows the checksum to be ignored by the master, if desired.

Read operations initially include the same address byte sequence as the write sequence (shown in Figure 2-10). This sequence is followed by another control byte (including the Start condition and Acknowledge) with the R/$\overline{W}$ bit equal to a logic one (R/$\overline{W}$ = 1) to indicate a read. The MTCH112 will then transmit the data contained in the addressed register. This is followed by the master generating an A bit in preparation for more data, or an $\overline{A}$ bit followed by a Stop. The sequence is ended with the master generating a Stop or Restart condition.

Figure 2-11 shows the waveforms for a single read.

2.3.6.1 Ignoring an I²C Transmission and "Falling Off" the Bus

The MTCH112 device expects to receive complete, valid I²C commands and will assume any command not defined as a valid command is due to a bus corruption and will enter a passive high condition on the SDA signal. All signals will be ignored until the next valid Start condition and control byte are received.

FIGURE 2-11: RANDOM READ COMMAND

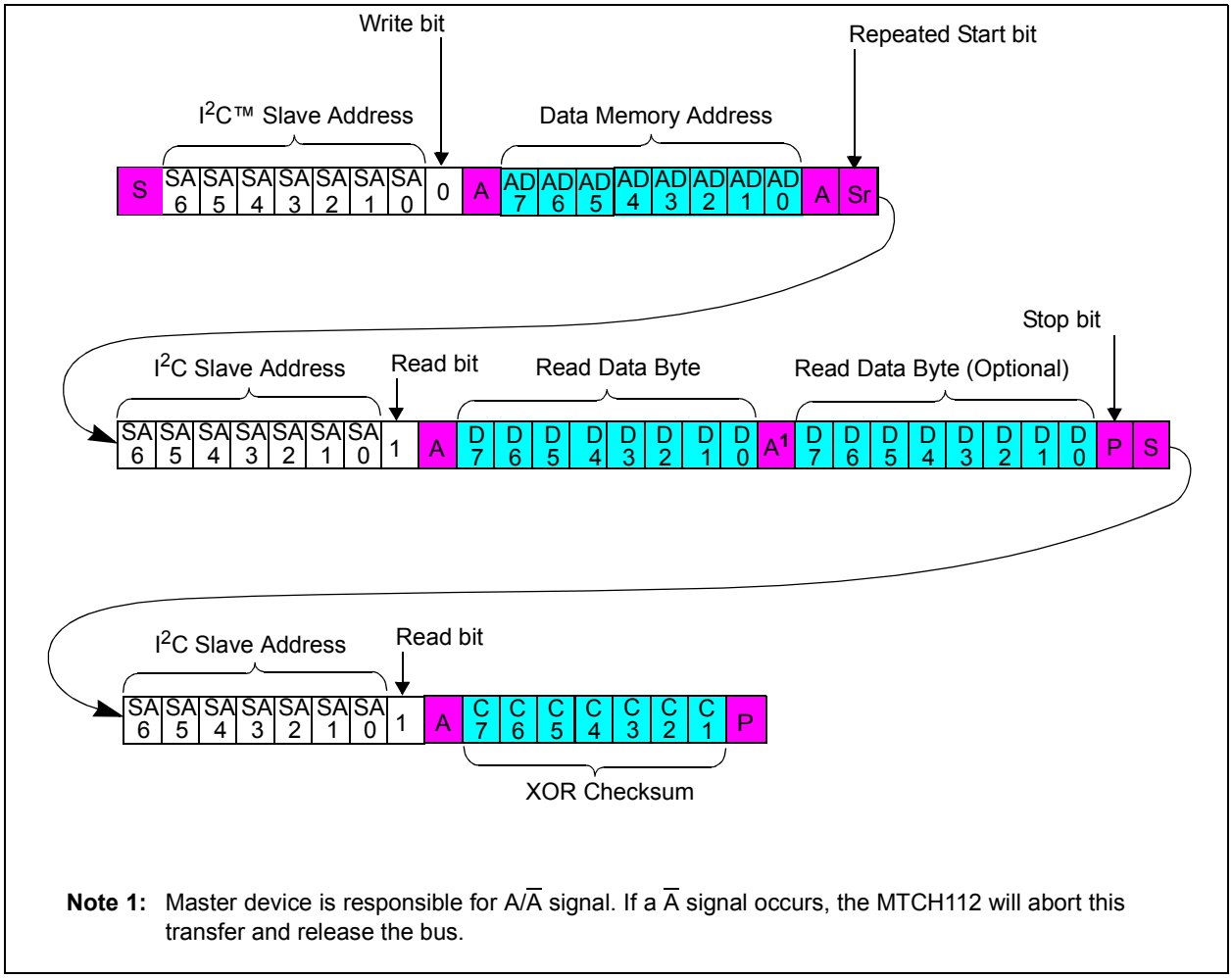

Note 1: Master device is responsible for A/$\overline{A}$ signal. If a $\overline{A}$ signal occurs, the MTCH112 will abort this transfer and release the bus.

 © 2012 Microchip Technology Inc.

3.0 CONFIGURATION REGISTERS

The registers in the MTCH112 have been organized in two groups: the Configuration registers and the output registers. The output registers are in the `0x80` (and higher) address range and are read-only. They provide the current sensor data for each input. The Configuration registers are both writable and readable. They show the current scan options and define the systems behavior.

To restore the Configuration registers to their default states and force a recalibration of the sensors, perform a write operation of 0xFF to address `0x00`.

3.1 Output Control Register (OUTCON)

This register contains the control bits for the MTO/INT pin to determine its behavior. If multiple bits in this register are set, the states they represent are ORd before the output is determined. For example, if the S1BOE and S0BOE bits are set, the MTO pin will output low if either MTI0 or MTI1 detect a button touch. If the S1POE and S0POE bits are set, the MTO pin will output low if either MTI0 or MTI1 make a proximity detection. If none of the bits are set, the pin will perform as a 1 ms pulsed interrupt pin for the I^2C master. (see Register 3-1)

REGISTER 3-1: OUTCON: OUTPUT CONTROL REGISTER

U-0	U-0	U-0	U-0	R/W-0/u	R/W-0/u	R/W-1/u	R/W-1/u
—	—	—	—	S1POE(1)	S0POE(1)	S1BOE(1)	S0BOE(1)
bit 7							bit 0

Legend:		
R = Readable bit	U = Unimplemented bit, read as ‘0’	
u = Bit is unchanged	-n/n = Factory setting value/Value after all Resets	
‘1’ = Bit is set	‘0’ = Bit is cleared	W = Writable bit

bit 7-4 **Unimplemented:** Read as ‘`0`’

bit 3 **S1POE:** Sensor 1 Proximity Output Enable bit
`1` = Output pin activates when Sensor 1 makes a proximity detection
`0` = Output pin does not change based on Sensor 1’s proximity detection

bit 2 **S0POE:** Sensor 0 Proximity Output Enable bit
`1` = Output pin activates when Sensor 0 makes a proximity detection
`0` = Output pin does not change based on Sensor 0’s proximity detection

bit 1 **S1BOE:** Sensor 1 Button Output Enable bit
`1` = Output pin activates when Sensor 1 makes a button press detection
`0` = Output pin does not change based on Sensor 1’s button press detection

bit 0 **S0BOE:** Sensor 0 Button Output Enable bit
`1` = Output pin activates when Sensor 0 makes a button press detection
`0` = Output pin does not change based on Sensor 0’s button press detection

Note 1: If all output enable bits are ‘`0`’, the output pin will behave as a wake-up signal to the master. It will be set active-low whenever new data becomes available.

3.2 Calibration Control Registers (CALCONx)

This register contains the calibration information for MTIx. It stores the chosen waveform type and whether or not the calibration has been completed. To recalibrate a sensor, clear its respective SxCAL bit in the CALCONx register (see Register 3-2 and Register 3-3).

REGISTER 3-2: CALCON0: SENSOR 0'S CALIBRATION CONTROL REGISTER

R/W-0/u	R/W-0/u	U-0	U-0	U-0	U-0	R/W-0/u	U-1
S0WS<1:0>		—	—	—	—	S0CAL	—
bit 7							bit 0

Legend:		
R = Readable bit	U = Unimplemented bit, read as '0'	
u = Bit is unchanged	-n/n = Factory setting value/Value after all Resets	
'1' = Bit is set	'0' = Bit is cleared	W = Writable bit

bit 7-6 **S0WS<1:0>:** Sensor 0 Waveform Selection bits
00 = Normal mTouch™ sensing CVD Waveform
01 = Double mTouch™ sensing CVD Waveform
10 = Half mTouch™ sensing CVD Waveform
11 = Reserved. Results in Double mTouch™ sensing CVD Waveform

bit 5-2 **Unimplemented:** Read as '0'

bit 1 **S0CAL:** Sensor 0 Calibrated bit
1 = Sensor 0 calibration complete
0 = New Sensor 0 calibration requested

bit 0 **Unimplemented:** Read as '0'

REGISTER 3-3: CALCON1: SENSOR 1'S CALIBRATION CONTROL REGISTER

R/W-0/u	R/W-0/u	U-0	U-0	U-0	U-0	R/W-0/u	R/W-1/u
S1WS<1:0>		—	—	—	—	S1CAL	S1EN
bit 7							bit 0

Legend:		
R = Readable bit	U = Unimplemented bit, read as '0'	
u = Bit is unchanged	-n/n = Factory setting value/Value after all Resets	
'1' = Bit is set	'0' = Bit is cleared	W = Writable bit

bit 7-6 **S1WS<1:0>:** Sensor 1 Waveform Selection bits
00 = Normal mTouch™ sensing CVD Waveform
01 = Double mTouch™ sensing CVD Waveform
10 = Half mTouch™ sensing CVD Waveform
11 = Reserved. Results in Double mTouch™ sensing CVD Waveform

bit 5-2 **Unimplemented:** Read as '0'

bit 1 **S1CAL:** Sensor 1 Calibrated bit
1 = Sensor 1 calibration complete
0 = New Sensor 1 calibration requested

bit 0 **S1EN:** Sensor 1 Enabled bit
1 = Sensor 1 is enabled. Scanning and decoding active.
0 = Sensor 1 is disabled. No scanning or decoding is performed.

 © 2012 Microchip Technology Inc.

3.3 ADC Acquisition Time Registers (ADACQx)

This stores the settling delay time for the CVD waveform. This value is part of the recalibration process and will be overwritten if the SxCAL bit is cleared (see Register 3-4 and Register 3-5).

REGISTER 3-4: ADACQ0: SENSOR 0'S ACQUISITION DELAY

U-0	U-0	U-0	R/W-0/u	R/W-0/u	R/W-0/u	R/W-0/u	R/W-0/u
—	—	—	S0ACQ<4:0>				
bit 7							bit 0

Legend:		
R = Readable bit	U = Unimplemented bit, read as '0'	
u = Bit is unchanged	-n/n = Factory setting value/Value after all Resets	
'1' = Bit is set	'0' = Bit is cleared	W = Writable bit

bit 7-5 **Unimplemented:** Read as '0'

bit 4-0 **S0ACQ<4:0>:** Sensor 0 Acquisition Delay bits

REGISTER 3-5: ADACQ1: SENSOR 1'S ACQUISITION DELAY

U-0	U-0	U-0	R/W-0/u	R/W-0/u	R/W-0/u	R/W-0/u	R/W-0/u
—	—	—	S1ACQ<4:0>				
bit 7							bit 0

Legend:		
R = Readable bit	U = Unimplemented bit, read as '0'	
u = Bit is unchanged	-n/n = Factory setting value/Value after all Resets	
'1' = Bit is set	'0' = Bit is cleared	W = Writable bit

bit 7-5 **Unimplemented:** Read as '0'

bit 4-0 **S1ACQ<4:0>:** Sensor 1 Acquisition Delay bits

3.4 Low-Power Control Register (LPCON)

This register provides the low-power options for the MTCH112. It determines how long the device will sleep when no detections have been made, and how fast the internal oscillator will run. If the CLKSEL bit is set, the valid VDD operating range will decrease. See the bit description in Register 3-6 for more information.

REGISTER 3-6: LPCON: LOW-POWER CONTROL REGISTER

U-0	U-0	R/W-0/u	R/W-0/u	R/W-0/u	R/W-0/u	R/W-1/u	R/W-1/u
—	—	SLEEP<4:0>					CLKSEL
bit 7							bit 0

Legend:		
R = Readable bit	U = Unimplemented bit, read as ‘0’	
u = Bit is unchanged	-n/n = Factory setting value/Value after all Resets	
‘1’ = Bit is set	‘0’ = Bit is cleared	W = Writable bit

bit 7-6 **Unimplemented:** Read as ‘0’

bit 5-1 **SLEEP<4:0>:** Sleep duration between scans when inactive
00000 = 1 ms, typical sleep duration
00001 = 2 ms, typical sleep duration
00010 = 4 ms, typical sleep duration
00011 = 8 ms, typical sleep duration
00100 = 16 ms, typical sleep duration
00101 = 32 ms, typical sleep duration
00110 = 64 ms, typical sleep duration
00111 = 128 ms, typical sleep duration
01000 = 256 ms, typical sleep duration
01001 = 512 ms, typical sleep duration
01010 = 1 sec, typical sleep duration
01011 = 2 sec, typical sleep duration
01100 = 4 sec, typical sleep duration
01101 = 8 sec, typical sleep duration
01110 = 16 sec, typical sleep duration
01111 = 32 sec, typical sleep duration
10000 = 64 sec, typical sleep duration
10001 = 128 sec, typical sleep duration
10010 = 256 sec, typical sleep duration

10011 = Reserved. Results in 1 ms sleep duration.
. . .
11111 = Reserved. Results in 1 ms sleep duration.

bit 0 CLKSEL: Oscillator Selection bit
1 = Internal oscillator runs at 32 MHz
Decreases response time
Increases power consumption
Valid VDD operating range when selected is 2.5V-3.6V
0 = Internal oscillator runs at 16 MHz
Decreases response time
Increases power consumption
Valid VDD operating range when selected is 1.8V-3.6V

 © 2012 Microchip Technology Inc.

3.5 Press Threshold Register (PRESS_THRESH)

The register stores the minimum shift amount of the signal away from the baseline that is required to activate a sensor as "*touched*". The real-time threshold of the sensor is handled internally, based on current noise levels and the expected press amount. This value simply creates a lower bound. It is not mandatory unless the user wishes to ensure that the sensor is not too sensitive in low-noise environments (see Register 3-7).

REGISTER 3-7: PRESS_THRESH: PRESS THRESHOLD REGISTER

R/W-0/u	R/W-0/u	R/W-0/u	R/W-0/u	R/W-0/u	R/W-0/u	R/W-0/u	R/W-0/u
PRESS_THSH<7:0>							
bit 7							bit 0

Legend:		
R = Readable bit	U = Unimplemented bit, read as '0'	
u = Bit is unchanged	-n/n = Factory setting value/Value after all Resets	
'1' = Bit is set	'0' = Bit is cleared	W = Writable bit

bit 7-0 **PRESS_THSH<7:0>:** Absolute Minimum Press Threshold

3.6 Proximity Threshold Register (PROX_THRESH)

This register is identical to the Press Threshold register, except that it relates to the proximity detection. Increase this value to decrease the sensitivity of the sensor in low-noise environments (see Register 3-8).

REGISTER 3-8: PROX_THRESH: PROXIMITY THRESHOLD REGISTER

R/W-0/u	R/W-0/u	R/W-0/u	R/W-0/u	R/W-0/u	R/W-0/u	R/W-0/u	R/W-0/u
PROX_THSH<7:0>							
bit 7							bit 0

Legend:		
R = Readable bit	U = Unimplemented bit, read as '0'	
u = Bit is unchanged	-n/n = Factory setting value/Value after all Resets	
'1' = Bit is set	'0' = Bit is cleared	W = Writable bit

bit 7-0 **PROX_THSH<7:0>:** Absolute Minimum Proximity Threshold

3.7 16-bit Time-Out Register (TIMEOUT_L and TIMEOUT_H)

This set of registers determines how long the 'detected' state is able to remain activated before automatically being reset to a non-detected state. It also determines how long after no changes in the environment have occurred before setting the controller to its Idle state. When in Idle state, the system will sleep (see Register 3-6) between each reading (see Register 3-9 and Register 3-10).

REGISTER 3-9: TIMEOUT_L: TIME-OUT COUNTER, LOW BYTE REGISTER

R/W-1/u	R/W-1/u	R/W-1/u	R/W-1/u	R/W-1/u	R/W-1/u	R/W-1/u	R/W-1/u
TIMEOUT<7:0>							
bit 7							bit 0

Legend:		
R = Readable bit	U = Unimplemented bit, read as '0'	
u = Bit is unchanged	-n/n = Factory setting value/Value after all Resets	
'1' = Bit is set	'0' = Bit is cleared	W = Writable bit

bit 7-0 **TIMEOUT<7:0>:** Time-out Counter Reload Value, Low Byte

REGISTER 3-10: TIMEOUT_H: TIME-OUT COUNTER, HIGH BYTE REGISTER

R/W-0/u	R/W-0/u	R/W-0/u	R/W-0/u	R/W-0/u	R/W-0/u	R/W-0/u	R/W-1/u
TIMEOUT<15:8>							
bit 7							bit 0

Legend:		
R = Readable bit	U = Unimplemented bit, read as '0'	
u = Bit is unchanged	-n/n = Factory setting value/Value after all Resets	
'1' = Bit is set	'0' = Bit is cleared	W = Writable bit

bit 7-0 **TIMEOUT<15:8>:** Time-out Counter Reload Value, High Byte

 © 2012 Microchip Technology Inc.

3.8 I²C Address Register (I²CADDR)

This register determines the I²C address of the slave. After writing to this register, command immediately should begin using the new address value (see Register 3-11).

Register 3-11: I²CADDR: I²C™ Address Register

R/W-1/u	R/W-1/u	R/W-1/u	R/W-0/u	R/W-0/u	R/W-1/u	R/W-1/u	U-1
I²CADDR<7:1>							—
bit 7							bit 0

Legend:		
R = Readable bit	U = Unimplemented bit, read as ‘0’	
u = Bit is unchanged	-n/n = Factory setting value/Value after all Resets	
‘1’ = Bit is set	‘0’ = Bit is cleared	W = Writable bit

bit 7-1 **I²CADDR<7:1>:** I²C Address for communication with the MTCH112.

bit 0 **Unimplemented:** Read as ‘0’

3.9 State Register (STATE)

This register is read-only. It contains the current touch and proximity state of MTI0 and MTI1, and provides error information if a short is detected on any MTIx pin to VDD, VSS or the other MTIx pin (see Register 3-12).

REGISTER 3-12: STATE: CURRENT SENSOR STATE REGISTER

U-0	R-0/x	R-0/x	R-0/x	R-0/x	R-0/x	R-0/x	R-0/x
—	ERRSTATE<2:0>			S1PS	S0PS	S1BS	S0BS
bit 7							bit 0

Legend:		
R = Readable bit	U = Unimplemented bit, read as ‘0’	
u = Bit is unchanged	-n/n = Factory setting value/Value after all Resets	
‘1’ = Bit is set	‘0’ = Bit is cleared	W = Writable bit

bit 7 **Unimplemented:** Read as ‘0’

bit 6-4 **ERRSTATE<2:0>:** Error Status Information bits
000 = Both sensors floating correctly
001 = Sensor 0 is shorted to VDD
010 = Sensor 1 is shorted to VDD
011 = Sensor 0 is shorted to VSS
100 = Sensor 1 is shorted to VSS
101 = Sensors are shorted together
110 = Reserved
111 = Reserved

bit 3 **S1PS:** Sensor 1 Proximity Status bit
1 = Proximity detected on Sensor 1
0 = No proximity detected on Sensor 1

bit 2 **S0PS:** Sensor 0 Proximity Status bit
1 = Proximity detected on Sensor 0
0 = No proximity detected on Sensor 0

bit 1 **S1BS:** Sensor 1 Button Status bit
1 = Button press detected on Sensor 1
0 = No button press detected on Sensor 1

bit 0 **S0BS:** Sensor 0 Button Status bit
1 = Button press detected on Sensor 0
0 = No button press detected on Sensor 0

 © 2012 Microchip Technology Inc.

3.10 Reading Registers (READINGxL and READINGxH)

These registers contain the current raw value of the MTIx pins. They are 13-bit values, but it is recommended to treat them as 16-bit values to more easily support future designs (see Register 3-13 to Register 3-16).

REGISTER 3-13: READING0L: SENSOR 0 READING VALUE, LOW BYTE

R-x	R-x	R-x	R-x	R-x	R-x	R-x	R-x
READING0L<7:0>							
bit 7							bit 0

Legend:		
R = Readable bit	U = Unimplemented bit, read as ‘0’	
u = Bit is unchanged	-n/n = Factory setting value/Value after all Resets	
‘1’ = Bit is set	‘0’ = Bit is cleared	W = Writable bit

bit 7-0 **READING0L<7:0>:** Sensor 0 Current Reading Value, Low Byte

REGISTER 3-14: READING0H: SENSOR 0 READING VALUE, HIGH BYTE

U-0	U-0	U-0	R-x	R-x	R-x	R-x	R-x
—	—	—	READING0H<4:0>				
bit 7							bit 0

Legend:		
R = Readable bit	U = Unimplemented bit, read as ‘0’	
u = Bit is unchanged	-n/n = Factory setting value/Value after all Resets	
‘1’ = Bit is set	‘0’ = Bit is cleared	W = Writable bit

bit 7-5 **Unimplemented:** Read as ‘0’

bit 4-0 **READING0H<4:0>:** Sensor 0 Current Reading Value, High Byte

REGISTER 3-15: READING1L: SENSOR 1 READING VALUE, LOW BYTE

R-x	R-x	R-x	R-x	R-x	R-x	R-x	R-x
READING1L<7:0>							
bit 7							bit 0

Legend:		
R = Readable bit	U = Unimplemented bit, read as ‘0’	
u = Bit is unchanged	-n/n = Factory setting value/Value after all Resets	
‘1’ = Bit is set	‘0’ = Bit is cleared	W = Writable bit

bit 7-0 **READING1L<7:0>:** Sensor 1 Current Reading Value, Low Byte

REGISTER 3-16: READING1H: SENSOR 1 READING VALUE, HIGH BYTE

U-0	U-0	U-0	R-x	R-x	R-x	R-x	R-x
—	—	—	READING1H<4:0>				
bit 7							bit 0

Legend:		
R = Readable bit	U = Unimplemented bit, read as ‘0’	
u = Bit is unchanged	-n/n = Factory setting value/Value after all Resets	
‘1’ = Bit is set	‘0’ = Bit is cleared	W = Writable bit

bit 7-5 **Unimplemented:** Read as ‘0’

bit 4-0 **READING1H<4:0>:** Sensor 1 Current Reading Value, High Byte

3.11 Baseline Registers (BASELINExL and BASELINExH)

These registers contain the current baseline value of the MTIx pins. They are 13-bit values, but it is recommended to treat as unsigned 16-bit values to more easily support future designs (see Register 3-17 to Register 3-20).

REGISTER 3-17: BASELINE0L: SENSOR 0 BASELINE VALUE, LOW BYTE

R-x	R-x	R-x	R-x	R-x	R-x	R-x	R-x
BASELINE0L<7:0>							
bit 7							bit 0

Legend:		
R = Readable bit	U = Unimplemented bit, read as ‘0’	
u = Bit is unchanged	-n/n = Factory setting value/Value after all Resets	
‘1’ = Bit is set	‘0’ = Bit is cleared	W = Writable bit

bit 7-0 **BASELINE0L<7:0>:** Sensor 0 Current Baseline Value, Low Byte

REGISTER 3-18: BASELINE0H: SENSOR 0 BASELINE VALUE, HIGH BYTE

U-0	U-0	U-0	R-x	R-x	R-x	R-x	R-x
—	—	—	BASELINE0H<4:0>				
bit 7							bit 0

Legend:		
R = Readable bit	U = Unimplemented bit, read as ‘0’	
u = Bit is unchanged	-n/n = Factory setting value/Value after all Resets	
‘1’ = Bit is set	‘0’ = Bit is cleared	W = Writable bit

bit 7-5 **Unimplemented:** Read as ‘0’

bit 4-0 **BASELINE0H<4:0>:** Sensor 0 Current Baseline Value, High Byte

 © 2012 Microchip Technology Inc.

REGISTER 3-19: BASELINE1L: SENSOR 1 BASELINE VALUE, LOW BYTE

R-x	R-x	R-x	R-x	R-x	R-x	R-x	R-x
BASELINE1L<7:0>							
bit 7							bit 0

Legend:		
R = Readable bit	U = Unimplemented bit, read as ‘0’	
u = Bit is unchanged	-n/n = Factory setting value/Value after all Resets	
‘1’ = Bit is set	‘0’ = Bit is cleared	W = Writable bit

bit 7-0 **BASELINE1L<7:0>:** Sensor 1 Current Baseline Value, Low Byte

REGISTER 3-20: BASELINE1H: SENSOR 1 BASELINE VALUE, HIGH BYTE

U-0	U-0	U-0	R-x	R-x	R-x	R-x	R-x
—	—	—	BASELINE1H<4:0>				
bit 7							bit 0

Legend:		
R = Readable bit	U = Unimplemented bit, read as ‘0’	
u = Bit is unchanged	-n/n = Factory setting value/Value after all Resets	
‘1’ = Bit is set	‘0’ = Bit is cleared	W = Writable bit

bit 7-5 **Unimplemented:** Read as ‘0’

bit 4-0 **BASELINE1H<4:0>:** Sensor 1 Current Baseline Value, High Byte

TABLE 3-1: REGISTER MAPPING

Address	Name	Bit7	Bit6	Bit5	Bit4	Bit3	Bit2	Bit1	Bit0
0x00	—	—	—	—	—	—	—	—	—
0x01	OUTCON	—	—	—	—	S1POE	S0POE	S1BOE	S0BOE
0x02	CALCON0	S0WS		—	—	—	—	S0CAL	—
0x03	CALCON1	S1WS		—	—	—	—	S1CAL	S1EN
0x04	ADACQ0				S0ACQ<4:0>				
0x05	ADACQ1				S1ACQ<4:0>				
0x06	LPCON			SLEEP<4:0>					CLKSEL
0x07	PRESS_THRESH	PRESS_THSH<7:0>							
0x08	PROX_THRESH	PROX_THSH<7:0>							
0x09	TIMEOUT_L	TIMEOUT<7:0>							
0x0A	TIMEOUT_H	TIMEOUT<15:8>							
0x0B	I^2CADDR	I^2CADDR<7:1>							—
0x0C	—	—	—	—	—	—	—	—	—
0x0D	—	—	—	—	—	—	—	—	—
0x0E	—	—	—	—	—	—	—	—	—
0x0F	—	—	—	—	—	—	—	—	—
0x80	STATE	—	ERRSTATE<2:0>			S1PS	S0PS	S1BS	S0BS
0x81	READING0L	READING0L<7:0>							
0x82	READING0H	—	—	—	READING0H<4:0>				
0x83	READING1L	READING1L<7:0>							
0x84	READING1H	—	—	—	READING1H<4:0>				
0x85	BASELINE0L	BASE0L<7:0>							
0x86	BASELINE0H	—	—	—	BASE0H<4:0>				
0x87	BASELINE1L	BASE1L<7:0>							
0x88	BASELINE1H	—	—	—	BASE1H<4:0>				

 © 2012 Microchip Technology Inc.

4.0 ELECTRICAL SPECIFICATIONS

Absolute Maximum Ratings(†)

Ambient temperature under bias ..... -40°C to +125°C
Storage temperature ..... -65°C to +150°C
Voltage on V_{DD} with respect to V_{SS} ..... -0.3V to +4.0V
Voltage on $\overline{MCLR}$ with respect to Vss ..... -0.3V to +9.0V
Voltage on all other pins with respect to V_{SS} ..... -0.3V to (V_{DD} + 0.3V)
Total power dissipation(1) ..... 800 mW
Maximum current out of V_{SS} pin, -40°C ≤ T_A ≤ +85°C for industrial ..... 85 mA
Maximum current into V_{DD} pin, -40°C ≤ T_A ≤ +85°C for industrial ..... 80 mA
Clamp current, I_K (V_{PIN} < 0 or V_{PIN} > V_{DD}) ..... ± 20 mA
Maximum output current sunk by any I/O pin ..... 25 mA
Maximum output current sourced by any I/O pin ..... 25 mA

Note 1: Power dissipation is calculated as follows: $P_{DIS} = V_{DD} \times \{I_{DD} - \sum I_{OH}\} + \sum\{(V_{DD} - V_{OH}) \times I_{OH}\} + \sum(V_{Ol} \times I_{OL})$.

† **NOTICE:** Stresses above those listed under "Absolute Maximum Ratings" may cause permanent damage to the device. This is a stress rating only and functional operation of the device at those or any other conditions above those indicated in the operation listings of this specification is not implied. Exposure to maximum rating conditions for extended periods may affect device reliability.

PRELIMINARY

FIGURE 4-1: VOLTAGE FREQUENCY GRAPH, -40°C ≤ TA ≤ +125°C

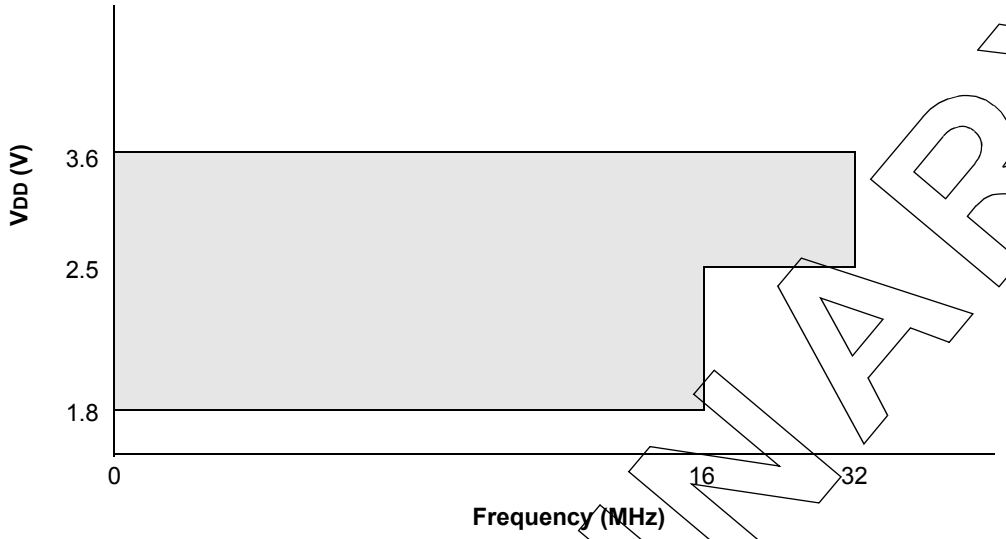

Note 1: The shaded region indicates the permissible combinations of voltage and frequency.

4.1 DC Characteristics: MTCH112

MTCH112			Standard Operating Conditions (unless otherwise stated) Operating temperature -40°C ≤ TA ≤ +85°C for industrial				
Param. No.	**Sym.**	**Characteristic**	**Min.**	**Typ†**	**Max.**	**Units**	**Conditions**
D001	VDD	**Supply Voltage**	1.8 2.5	— —	3.6 3.6	V V	CLKSEL = 0 CLKSEL = 1
D002*	VDR	**RAM Data Retention Voltage** (1)	1.5	—	—	V	Device in Sleep mode
	VPOR*	**Power-on Reset Release Voltage**	—	1.6	—	V	
	VPORR*	**Power-on Reset Rearm Voltage**	—	0.8	—	V	Device in Sleep mode
D004*	SVDD	**VDD Rise Rate** to ensure internal Power-on Reset signal	0.05	—	—	V/ms	

* These parameters are characterized but not tested.

† Data in "Typ" column is at 3.0V, 25°C unless otherwise stated. These parameters are for design guidance only and are not tested.

Note 1: This is the limit to which VDD can be lowered in Sleep mode without losing RAM data.

PRELIMINARY

 © 2012 Microchip Technology Inc.

TABLE 4-1: CURRENT CONSUMPTION

CLKSEL	Sleep (s)	1.8V	3.0V	CLKSEL	Sleep (s)	3.0V	3.6V
		Typ. (uA)	Typ. (uA)			Typ. (uA)	Typ. (uA)
16 MHz	**0**	640	990	**32 MHz**	**0**	1952	2350
	0.001	580	900		**0.001**	1780	2140
	0.002	540	830		**0.002**	1630	1970
	0.004	460	710		**0.004**	1400	1690
	0.008	360	560		**0.008**	1090	1320
	0.016	250	390		**0.016**	760	915
	0.032	160	240		**0.032**	470	570
	0.064	89	140		**0.064**	270	320
	0.128	48	74		**0.128**	150	170
	0.256	25	38		**0.256**	75	91
	0.512	13	20		**0.512**	39	46
	1	6.8	11		**1**	20	24
	2	3.6	5.5		**2**	10	12
	4	1.9	3.0		**4**	5	6
	8	1.1	1.8		**8**	3	3
	16	0.7	1.1		**16**	1.7	2
	32	0.5	0.8		**32**	1	1
	64	0.4	0.7		**64**	0.8	0.9
	128	0.3	0.6		**128**	0.7	0.7
	256	0.3	0.5		**256**	0.6	0.6

TABLE 4-2: RESPONSE TIME(1)

CLKSEL	Min.	Max.
1 (32 MHz)	20 ms	20 ms + LPCON
0 (16 MHz)	40 ms	40 ms + LPCON

Note 1: It assumes low and/or consistent environmental noise. Response times increase in high and/or erratic noise conditions.

PRELIMINARY

FIGURE 4-2: MAXIMUM PROXIMITY DISTANCE vs. SENSOR DIAMETER

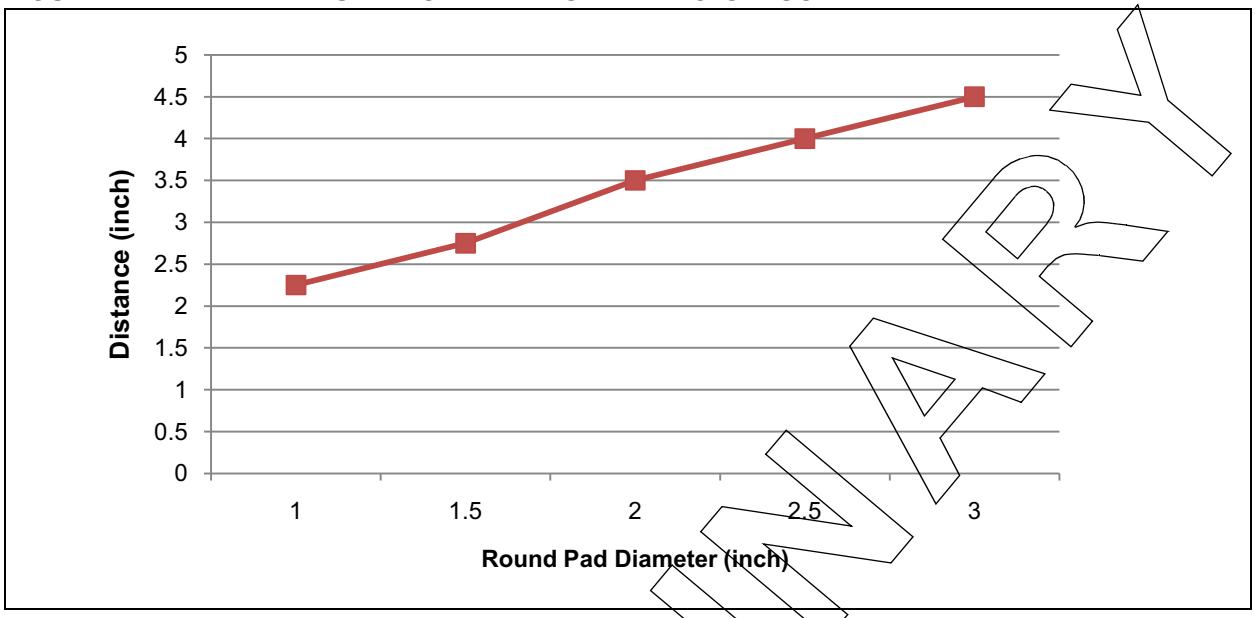

FIGURE 4-3: POR AND POR REARM WITH SLOW RISING VDD

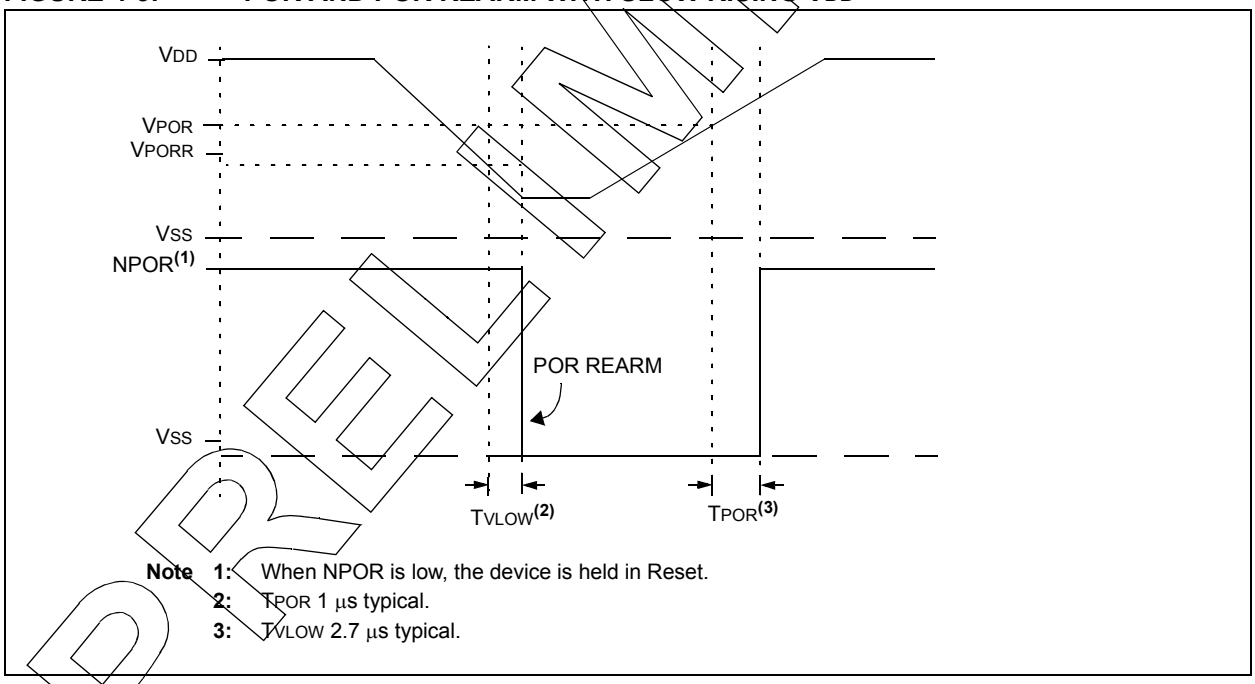

Note 1: When NPOR is low, the device is held in Reset.
2: TPOR 1 µs typical.
3: TVLOW 2.7 µs typical.

PRELIMINARY

 © 2012 Microchip Technology Inc.

4.2 DC Characteristics: MTCH112-I/E

DC CHARACTERISTICS			Standard Operating Conditions (unless otherwise stated) Operating temperature-40°C ≤ TA ≤ +85°C for industrial				
Param No.	**Sym.**	**Characteristic**	**Min.**	**Typ†**	**Max.**	**Units**	**Conditions**
	VIL	**Input Low Voltage**					
		I/O PORT:					
D030A		with TTL buffer	—	—	0.15 VDD	V	1.8V ≤ VDD ≤ 4.5V
D031		with I²C™ levels	—	—	0.3 VDD	V	
D032		$\overline{\text{MCLR}}$	—	—	0.2 VDD	V	
	VIH	**Input High Voltage**					
		I/O ports:		—	—		
D040A		with TTL buffer	0.25 VDD + 0.8	—	—	V	1.8V ≤ VDD ≤ 4.5V
D041		with I²C™ levels	0.7 VDD	—	—	V	
D042		$\overline{\text{MCLR}}$	0.8 VDD	—	—	V	
	IIL	**Input Leakage Current(1)**					
D060		I/O ports	—	± 5	± 125	nA	VSS ≤ VPIN ≤ VDD, Pin at high-impedance at 85°C
			—	± 5	± 1000	nA	125°C
D061		$\overline{\text{MCLR}}$(2)	—	± 50	± 200	nA	VSS ≤ VPIN ≤ VDD at 85°C
	VOL	**Output Low Voltage(3)**					
D080		I/O ports	—	—	0.6	V	IOL = 6 mA, VDD = 3.3V IOL = 1.8 mA, VDD = 1.8V
	VOH	**Output High Voltage(3)**					
D090		I/O ports	VDD - 0.7	—	—	V	IOH = 3 mA, VDD = 3.3V IOH = 1 mA, VDD = 1.8V
		Capacitive Loading Specs on Output Pins					
D101A*	CIO	All I/O pins	—	—	50	pF	

* These parameters are characterized but not tested.

† Data in "Typ" column is at 3.0V, 25°C unless otherwise stated. These parameters are for design guidance only and are not tested.

Note 1: Negative current is defined as current sourced by the pin.

2: The leakage current on the $\overline{\text{MCLR}}$ pin is strongly dependent on the applied voltage level. The specified levels represent normal operating conditions. Higher leakage current may be measured at different input voltages.

3: Including OSC2 in CLKOUT mode.

PRELIMINARY

4.3 Memory Programming Requirements

DC CHARACTERISTICS			Standard Operating Conditions (unless otherwise stated) Operating temperature -40°C ≤ TA ≤ +125°C				
Param No.	**Sym.**	**Characteristic**	**Min.**	**Typ†**	**Max.**	**Units**	**Conditions**
		Data EEPROM Memory					
D116	ED	Byte Endurance	100K	—	—	E/W	-40°C to +85°C
D117	VDRW	VDD for Read/Write	VDDMIN	—	VDDMAX	V	
D118	TDEW	Erase/Write Cycle Time	—	4.0	5.0	ms	
D119	TRETD	Characteristic Retention	20	—	—	Year	Provided no other specifications are violated

† Data in "Typ" column is at 3.0V, 25°C unless otherwise stated. These parameters are for design guidance only and are not tested.

FIGURE 4-4: LOAD CONDITIONS

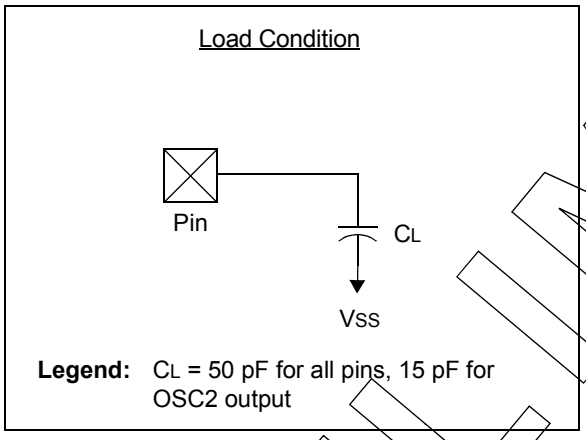

TABLE 4-3: CLKOUT AND I/O TIMING PARAMETERS

Standard Operating Conditions (unless otherwise stated) Operating Temperature -40°C ≤ TA ≤ +125°C							
Param No.	**Sym.**	**Characteristic**	**Min.**	**Typ†**	**Max.**	**Units**	**Conditions**
OS18*	TioR	Port output rise time	— —	90 55	140 80	ns	VDD = 1.8V VDD = 3.0-5.0V
OS19*	TioF	Port output fall time	— —	60 44	80 60	ns	VDD = 1.8V VDD = 3.0-5.0V

* These parameters are characterized but not tested.
† Data in "Typ" column is at 3.0V, 25°C unless otherwise stated.

PRELIMINARY

 © 2012 Microchip Technology Inc.

FIGURE 4-5: BROWN-OUT RESET TIMING AND CHARACTERISTICS

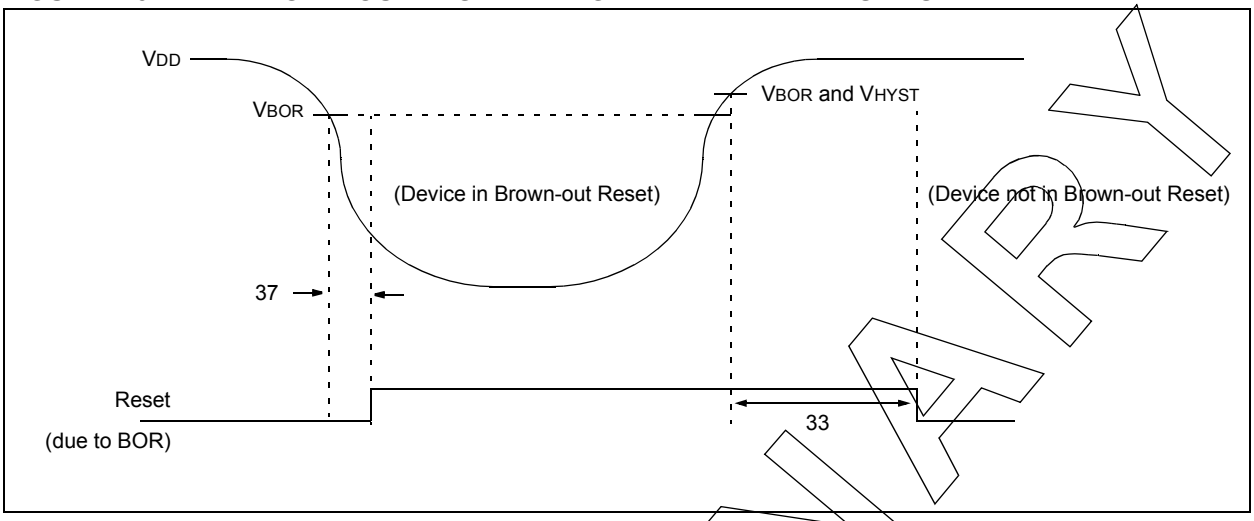

TABLE 4-4: RESET, WATCHDOG TIMER, OSCILLATOR START-UP TIMER, POWER-UP TIMER AND BROWN-OUT RESET PARAMETERS

Standard Operating Conditions (unless otherwise stated) Operating Temperature -40°C ≤ TA ≤ +125°C							
Param No.	**Sym.**	**Characteristic**	**Min.**	**Typ†**	**Max.**	**Units**	**Conditions**
30	TMCL	$\overline{\text{RESET}}$ Pulse Width (low)	2 5	— —	— —	μs μs	VDD = 3.3-5V, -40°C to +85°C VDD = 3.3-5V
31	TWDTLP	Watchdog Timer Time-out Period	10	16	27	ms	VDD = 3.3V-5V, 1:16 Prescaler used
33*	TPWRT	Power-up Timer Period	40	65	140	ms	
34*	TIOZ	I/O High-impedance from $\overline{\text{RESET}}$ Low or Watchdog Timer Reset	—	—	2.0	μs	
35	VBOR	Brown-out Reset Voltage	1.80	1.9	2.05	V	BORV=1.9V
37*	VHYST	Brown-out Reset Hysteresis	0	25	50	mV	-40°C to +85°C
38*	TBORDC	Brown-out Reset DC Response Time	0	1	40	μs	VDD ≤ VBOR

* These parameters are characterized but not tested.

† Data in "Typ" column is at 3.0V, 25°C unless otherwise stated. These parameters are for design guidance only and are not tested.

PRELIMINARY

FIGURE 4-6: I²C™ BUS START/STOP BITS TIMING

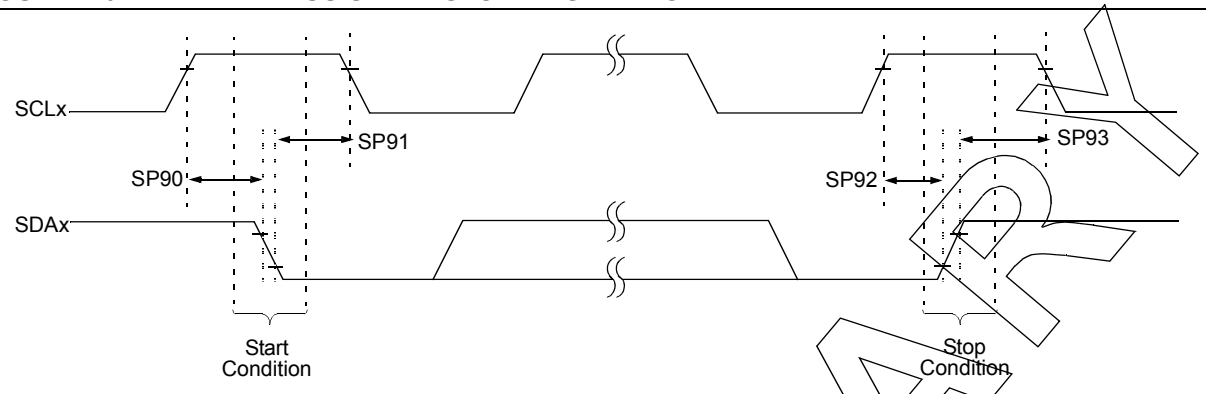

Note: Refer to Figure 4-4 for load conditions.

FIGURE 4-7: I²C™ BUS DATA TIMING

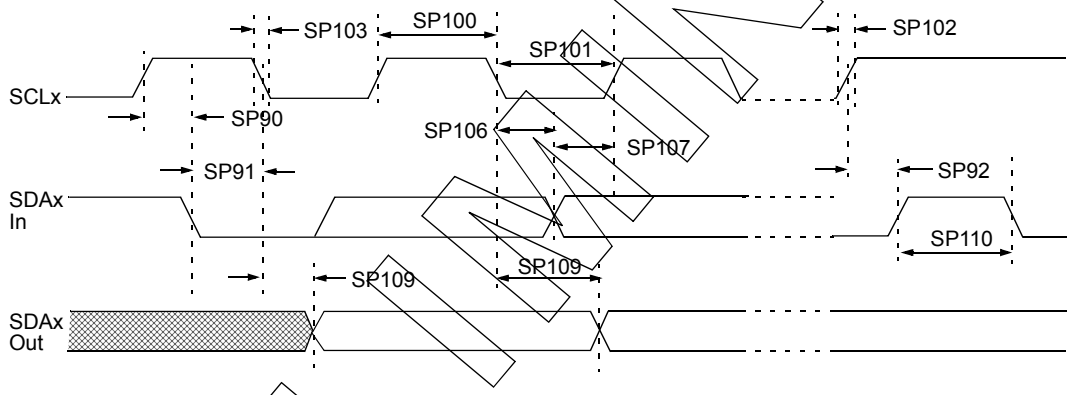

Note: Refer to Figure 4-4 for load conditions.

PRELIMINARY

 © 2012 Microchip Technology Inc.

TABLE 4-5: I²C™ BUS DATA REQUIREMENTS

Param. No.	Symbol	Characteristic		Min.	Max.	Units	Conditions
SP100*	THIGH	Clock high time	400 kHz mode	0.6	—	μs	Device must operate at a minimum of 10 MHz
			SSPx module	1.5TCY	—	—	
SP101*	TLOW	Clock low time	400 kHz mode	1.3	—	μs	Device must operate at a minimum of 10 MHz
SP102*	TR	SDAx and SCLx rise time	400 kHz mode	20 + 0.1CB	300	ns	CB is specified to be from 10-400 pF
SP103*	TF	SDAx and SCLx fall time	400 kHz mode	20 + 0.1CB	250	ns	CB is specified to be from 10-400 pF
SP106*	THD:DAT	Data input hold time	400 kHz mode	0	0.9	μs	
SP107*	TSU:DAT	Data input setup time	400 kHz mode	100	—	ns	
SP109*	TAA	Output valid from clock	400 kHz mode	—	—	ns	
SP110*	TBUF	Bus free time	400 kHz mode	1.3	—	μs	Time the bus must be free before a new transmission can start
SP111	CB	Bus capacitive loading		—	400	pF	

* These parameters are characterized but not tested.

5.0 PACKAGING INFORMATION

5.1 Package Marking Information

8-Lead SOIC (3.90 mm)

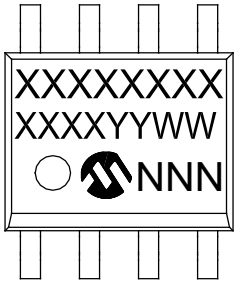

Example

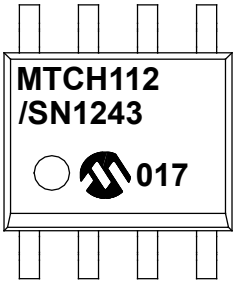

8-Lead DFN (3x3x0.9 mm)

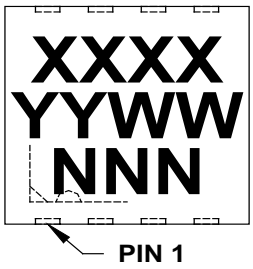

Example

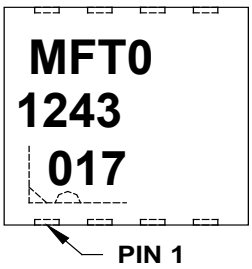

Legend:	XX...X	Customer-specific information
	Y	Year code (last digit of calendar year)
	YY	Year code (last 2 digits of calendar year)
	WW	Week code (week of January 1 is week ‘01’)
	NNN	Alphanumeric traceability code
	(e3)	Pb-free JEDEC designator for Matte Tin (Sn)
	*	This package is Pb-free. The Pb-free JEDEC designator ((e3)) can be found on the outer packaging for this package.
Note:	In the event the full Microchip part number cannot be marked on one line, it will be carried over to the next line, thus limiting the number of available characters for customer-specific information.	

* Standard PIC® device marking consists of Microchip part number, year code, week code, and traceability code. For PIC device marking beyond this, certain price adders apply. Please check with your Microchip Sales Office. For QTP devices, any special marking adders are included in QTP price.

 © 2012 Microchip Technology Inc.

5.2 Package Details

The following sections give the technical details of the packages.

8-Lead Plastic Small Outline (SN) - Narrow, 3.90 mm Body [SOIC]

Note:	For the most current package drawings, please see the Microchip Packaging Specification located at http://www.microchip.com/packaging

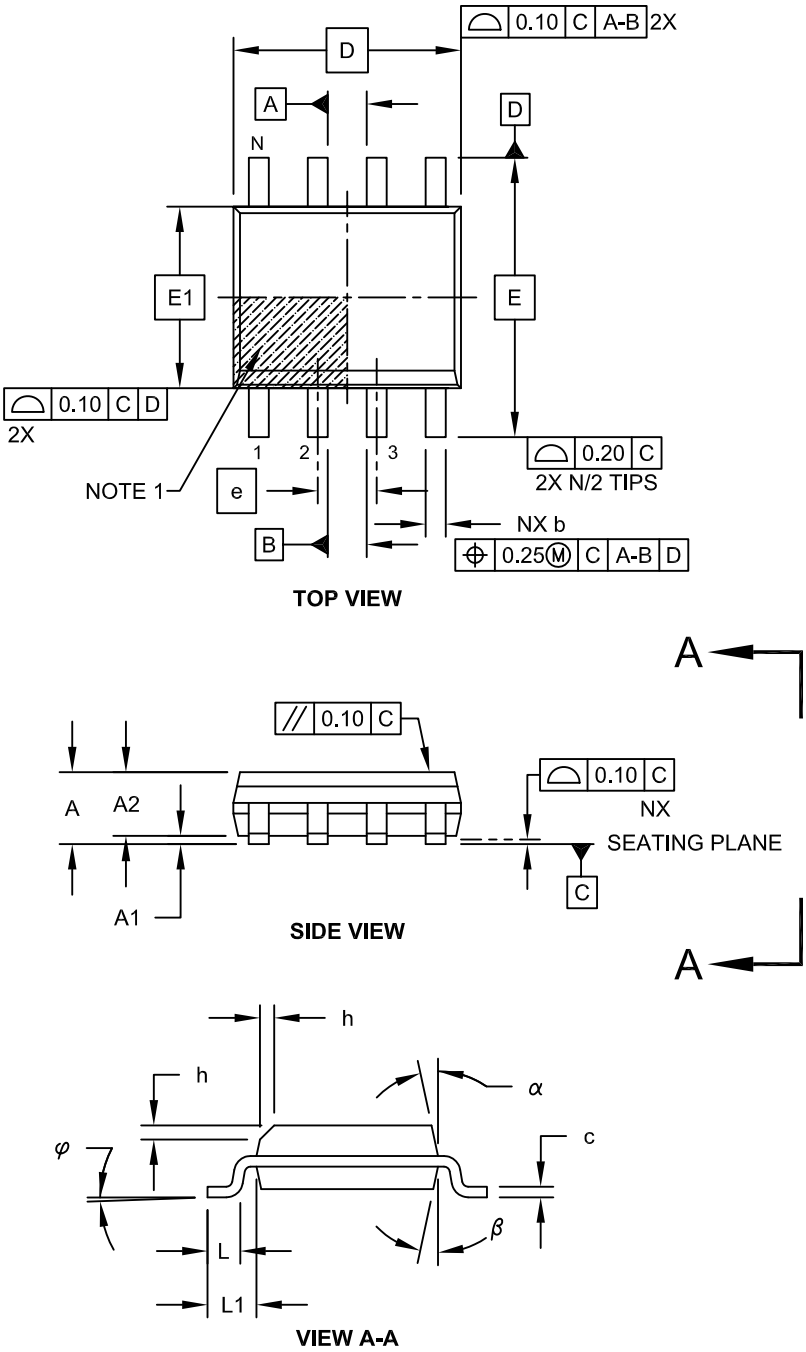

Microchip Technology Drawing No. C04-057C Sheet 1 of 2

8-Lead Plastic Small Outline (SN) - Narrow, 3.90 mm Body [SOIC]

Note: For the most current package drawings, please see the Microchip Packaging Specification located at http://www.microchip.com/packaging

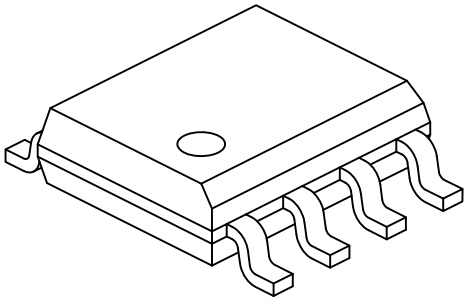

Units		MILLIMETERS		
Dimension Limits		MIN	NOM	MAX
Number of Pins	N	8		
Pitch	e	1.27 BSC		
Overall Height	A	-	-	1.75
Molded Package Thickness	A2	1.25	-	-
Standoff §	A1	0.10	-	0.25
Overall Width	E	6.00 BSC		
Molded Package Width	E1	3.90 BSC		
Overall Length	D	4.90 BSC		
Chamfer (Optional)	h	0.25	-	0.50
Foot Length	L	0.40	-	1.27
Footprint	L1	1.04 REF		
Foot Angle	φ	0°	-	8°
Lead Thickness	c	0.17	-	0.25
Lead Width	b	0.31	-	0.51
Mold Draft Angle Top	α	5°	-	15°
Mold Draft Angle Bottom	β	5°	-	15°

Notes:

1. Pin 1 visual index feature may vary, but must be located within the hatched area.
2. § Significant Characteristic
3. Dimensions D and E1 do not include mold flash or protrusions. Mold flash or protrusions shall not exceed 0.15mm per side.
4. Dimensioning and tolerancing per ASME Y14.5M

   BSC: Basic Dimension. Theoretically exact value shown without tolerances.

   REF: Reference Dimension, usually without tolerance, for information purposes only.

Microchip Technology Drawing No. C04-057C Sheet 2 of 2

 © 2012 Microchip Technology Inc.

8-Lead Plastic Small Outline (SN) – Narrow, 3.90 mm Body [SOIC]

Note: For the most current package drawings, please see the Microchip Packaging Specification located at http://www.microchip.com/packaging

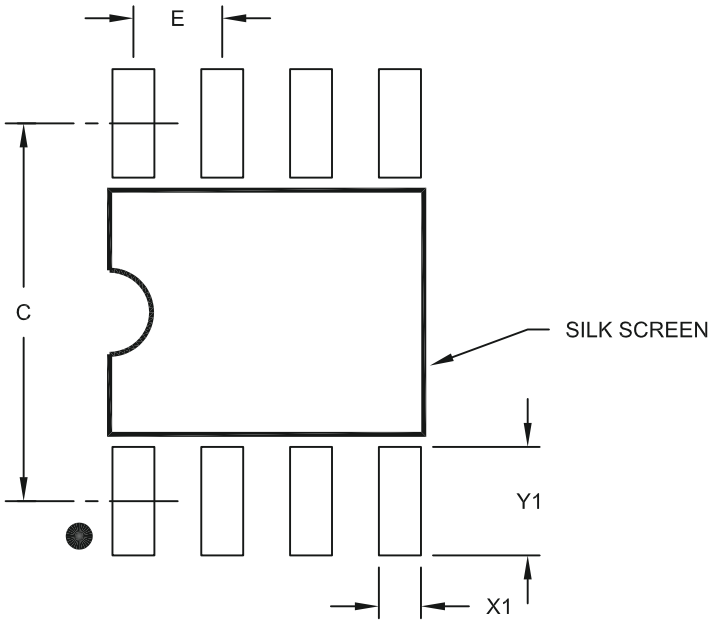

RECOMMENDED LAND PATTERN

Units		MILLIMETERS		
Dimension Limits		MIN	NOM	MAX
Contact Pitch	E	1.27 BSC		
Contact Pad Spacing	C		5.40	
Contact Pad Width (X8)	X1			0.60
Contact Pad Length (X8)	Y1			1.55

Notes:

1. Dimensioning and tolerancing per ASME Y14.5M
   BSC: Basic Dimension. Theoretically exact value shown without tolerances.

Microchip Technology Drawing No. C04-2057A

8-Lead Plastic Dual Flat, No Lead Package (MF) - 3x3x0.9mm Body [DFN]

Note: For the most current package drawings, please see the Microchip Packaging Specification located at http://www.microchip.com/packaging

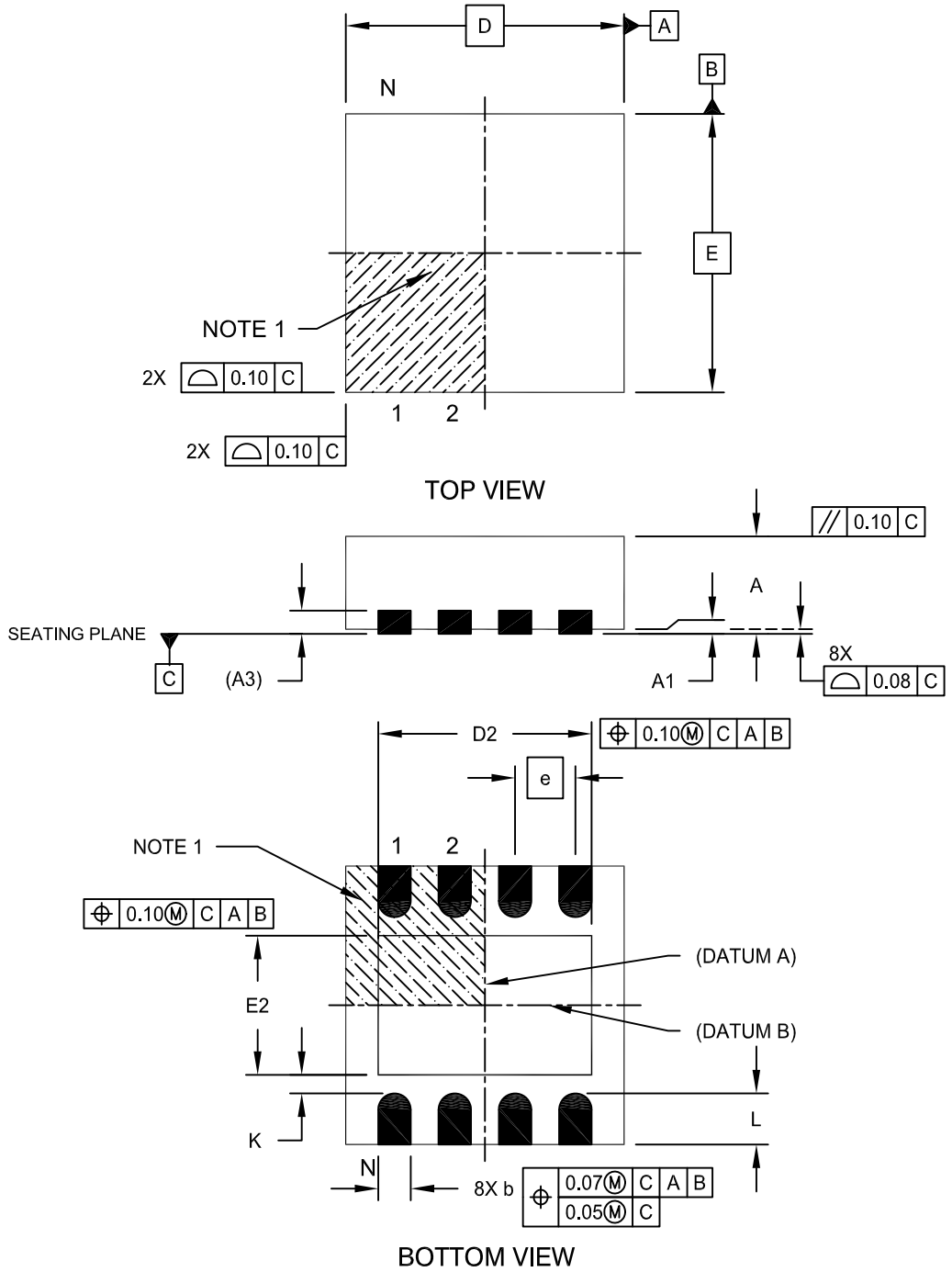

Microchip Technology Drawing No. C04-062C Sheet 1 of 2

 © 2012 Microchip Technology Inc.

8-Lead Plastic Dual Flat, No Lead Package (MF) - 3x3x0.9mm Body [DFN]

Note: For the most current package drawings, please see the Microchip Packaging Specification located at http://www.microchip.com/packaging

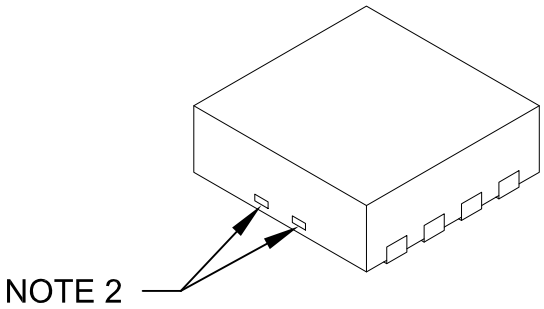

Units		MILLIMETERS		
Dimension Limits		MIN	NOM	MAX
Number of Pins	N	8		
Pitch	e	0.65 BSC		
Overall Height	A	0.80	0.90	1.00
Standoff	A1	0.00	0.02	0.05
Contact Thickness	A3	0.20 REF		
Overall Length	D	3.00 BSC		
Exposed Pad Width	E2	1.34	-	1.60
Overall Width	E	3.00 BSC		
Exposed Pad Length	D2	1.60	-	2.40
Contact Width	b	0.25	0.30	0.35
Contact Length	L	0.20	0.30	0.55
Contact-to-Exposed Pad	K	0.20	-	-

Notes:

1. Pin 1 visual index feature may vary, but must be located within the hatched area.
2. Package may have one or more exposed tie bars at ends.
3. Package is saw singulated
4. Dimensioning and tolerancing per ASME Y14.5M

   BSC: Basic Dimension. Theoretically exact value shown without tolerances.

   REF: Reference Dimension, usually without tolerance, for information purposes only.

Microchip Technology Drawing No. C04-062C Sheet 2 of 2

8-Lead Plastic Dual Flat, No Lead Package (MF) - 3x3x0.9mm Body [DFN]

Note: For the most current package drawings, please see the Microchip Packaging Specification located at http://www.microchip.com/packaging

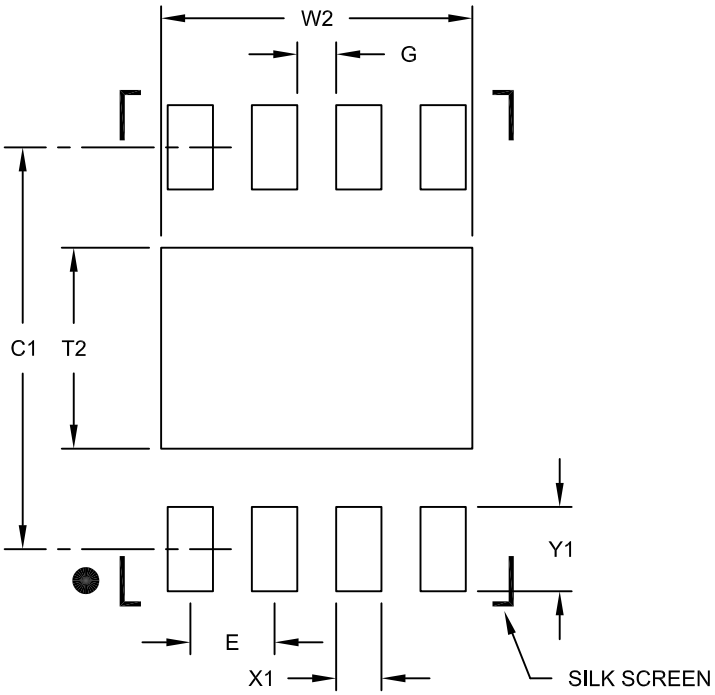

RECOMMENDED LAND PATTERN

Units		MILLIMETERS		
Dimension Limits		MIN	NOM	MAX
Contact Pitch	E		0.65 BSC	
Optional Center Pad Width	W2			2.40
Optional Center Pad Length	T2			1.55
Contact Pad Spacing	C1		3.10	
Contact Pad Width (X8)	X1			0.35
Contact Pad Length (X8)	Y1			0.65
Distance Between Pads	G	0.30		

Notes:

1. Dimensioning and tolerancing per ASME Y14.5M

BSC: Basic Dimension. Theoretically exact value shown without tolerances.

Microchip Technology Drawing No. C04-2062B

 © 2012 Microchip Technology Inc.

APPENDIX A: DATA SHEET REVISION HISTORY

Revision A (11/2012)

Initial release of this data sheet.

INDEX

Symbols

I2C Hardware Interface 6

Numerics

16-bit Time-out Register (TIMEOUT_L and TIMEOUT_H) . 18

A

Absolute Maximum Ratings 25
ADC Acquisition Time Registers (ADACQx) 15

B

Baseline Registers (BASELINExL and BASELINExH) 22
Brown-out Reset (BOR)
    Specifications 31
    Timing and Characteristics 31

C

Calibration Control Registers (CALCONx) 14
Configuration Registers 13
Customer Change Notification Service 43
Customer Notification Service 43
Customer Support 43

D

DC Characteristics
    Industrial 29
    MTCH112 26
Device Overview 3

E

Electrical Specifications 25
Errata 2

F

Features 1

I

I2C Address Register (I2CADDR) 19
I2C™ Communications and Protocol 6
Internet Address 43

L

Low Power Control Register (LPCON) 16

M

Microchip Internet Web Site 43

O

Oscillator Start-up Timer (OST)
    Specifications 31
Output Control Register (OUTCON) 13

P

Package Type 1
Packaging
    SOIC, DFN 35
Packaging Information 34
Power-up Timer (PWRT)
    Specifications 31
Press Threshold Register (PRESS_THRESH) 17
Proximity Threshold Register (PROX_THRESH) 17

R

Reader Response 44
Reading Registers (READINGxL and READINGxH) 21
Register Mapping 24
Revision History 41

S

State Register (STATE) 20

T

Timing Diagrams
    Brown-out Reset (BOR) 31
    I^2C Bus Data 32
Timing Requirements
    I^2C Bus Data 33

W

WWW Address 43
WWW, On-Line Support 2

 © 2012 Microchip Technology Inc.

THE MICROCHIP WEB SITE

Microchip provides online support via our WWW site at www.microchip.com. This web site is used as a means to make files and information easily available to customers. Accessible by using your favorite Internet browser, the web site contains the following information:

- **Product Support** – Data sheets and errata, application notes and sample programs, design resources, user's guides and hardware support documents, latest software releases and archived software
- **General Technical Support** – Frequently Asked Questions (FAQ), technical support requests, online discussion groups, Microchip consultant program member listing
- **Business of Microchip** – Product selector and ordering guides, latest Microchip press releases, listing of seminars and events, listings of Microchip sales offices, distributors and factory representatives

CUSTOMER CHANGE NOTIFICATION SERVICE

Microchip's customer notification service helps keep customers current on Microchip products. Subscribers will receive e-mail notification whenever there are changes, updates, revisions or errata related to a specified product family or development tool of interest.

To register, access the Microchip web site at www.microchip.com. Under "Support", click on "Customer Change Notification" and follow the registration instructions.

CUSTOMER SUPPORT

Users of Microchip products can receive assistance through several channels:

- Distributor or Representative
- Local Sales Office
- Field Application Engineer (FAE)
- Technical Support
- Development Systems Information Line

Customers should contact their distributor, representative or field application engineer (FAE) for support. Local sales offices are also available to help customers. A listing of sales offices and locations is included in the back of this document.

Technical support is available through the web site at: http://microchip.com/support

READER RESPONSE

It is our intention to provide you with the best documentation possible to ensure successful use of your Microchip product. If you wish to provide your comments on organization, clarity, subject matter, and ways in which our documentation can better serve you, please FAX your comments to the Technical Publications Manager at (480) 792-4150.

Please list the following information, and use this outline to provide us with your comments about this document.

TO: Technical Publications Manager

RE: Reader Response

Total Pages Sent _____

From: Name _____

Company _____

Address _____

City / State / ZIP / Country _____

Telephone: (_____) _____ - _____ FAX: (_____) _____ - _____

Application (optional):

Would you like a reply? ___Y ___N

Device: MTCH112 Literature Number: DS41668A

Questions:

1. What are the best features of this document?

_____

_____

2. How does this document meet your hardware and software development needs?

_____

_____

3. Do you find the organization of this document easy to follow? If not, why?

_____

_____

4. What additions to the document do you think would enhance the structure and subject?

_____

_____

5. What deletions from the document could be made without affecting the overall usefulness?

_____

_____

6. Is there any incorrect or misleading information (what and where)?

_____

_____

7. How would you improve this document?

_____

_____

 © 2012 Microchip Technology Inc.

PRODUCT IDENTIFICATION SYSTEM

To order or obtain information, e.g., on pricing or delivery, refer to the factory or the listed sales office.

PART NO.	[X][1]	-	X	/XX	XXX
Device	Tape and Reel Option		Temperature Range	Package	Pattern

Device:	MTCH112
Tape and Reel Option:	Blank = Standard packaging (tube or tray) T = Tape and Reel[1]
Temperature Range:	I = -40°C to +85°C (Industrial)
Package:[2]	SN = SOIC MF = DFN
Pattern:	QTP, SQTP, Code or Special Requirements (blank otherwise)

Examples:

a) MTCH112 - I/MF
Industrial temperature,
DFN package

Note 1: Tape and Reel identifier only appears in the catalog part number description. This identifier is used for ordering purposes and is not printed on the device package. Check with your Microchip Sales Office for package availability with the Tape and Reel option.

2: For other small form-factor package availability and marking information, please visit www.microchip.com/packaging or contact your local sales office.

NOTES:

 © 2012 Microchip Technology Inc.

Note the following details of the code protection feature on Microchip devices:

- Microchip products meet the specification contained in their particular Microchip Data Sheet.
- Microchip believes that its family of products is one of the most secure families of its kind on the market today, when used in the intended manner and under normal conditions.
- There are dishonest and possibly illegal methods used to breach the code protection feature. All of these methods, to our knowledge, require using the Microchip products in a manner outside the operating specifications contained in Microchip's Data Sheets. Most likely, the person doing so is engaged in theft of intellectual property.
- Microchip is willing to work with the customer who is concerned about the integrity of their code.
- Neither Microchip nor any other semiconductor manufacturer can guarantee the security of their code. Code protection does not mean that we are guaranteeing the product as "unbreakable."

Code protection is constantly evolving. We at Microchip are committed to continuously improving the code protection features of our products. Attempts to break Microchip's code protection feature may be a violation of the Digital Millennium Copyright Act. If such acts allow unauthorized access to your software or other copyrighted work, you may have a right to sue for relief under that Act.

Information contained in this publication regarding device applications and the like is provided only for your convenience and may be superseded by updates. It is your responsibility to ensure that your application meets with your specifications. MICROCHIP MAKES NO REPRESENTATIONS OR WARRANTIES OF ANY KIND WHETHER EXPRESS OR IMPLIED, WRITTEN OR ORAL, STATUTORY OR OTHERWISE, RELATED TO THE INFORMATION, INCLUDING BUT NOT LIMITED TO ITS CONDITION, QUALITY, PERFORMANCE, MERCHANTABILITY OR FITNESS FOR PURPOSE**.** Microchip disclaims all liability arising from this information and its use. Use of Microchip devices in life support and/or safety applications is entirely at the buyer's risk, and the buyer agrees to defend, indemnify and hold harmless Microchip from any and all damages, claims, suits, or expenses resulting from such use. No licenses are conveyed, implicitly or otherwise, under any Microchip intellectual property rights.

QUALITY MANAGEMENT SYSTEM
CERTIFIED BY DNV
═ ISO/TS 16949 ═

Trademarks

The Microchip name and logo, the Microchip logo, dsPIC, FlashFlex, KEELOQ, KEELOQ logo, MPLAB, PIC, PICmicro, PICSTART, PIC^{32} logo, rfPIC, SST, SST Logo, SuperFlash and UNI/O are registered trademarks of Microchip Technology Incorporated in the U.S.A. and other countries.

FilterLab, Hampshire, HI-TECH C, Linear Active Thermistor, MTP, SEEVAL and The Embedded Control Solutions Company are registered trademarks of Microchip Technology Incorporated in the U.S.A.

Silicon Storage Technology is a registered trademark of Microchip Technology Inc. in other countries.

Analog-for-the-Digital Age, Application Maestro, BodyCom, chipKIT, chipKIT logo, CodeGuard, dsPICDEM, dsPICDEM.net, dsPICworks, dsSPEAK, ECAN, ECONOMONITOR, FanSense, HI-TIDE, In-Circuit Serial Programming, ICSP, Mindi, MiWi, MPASM, MPF, MPLAB Certified logo, MPLIB, MPLINK, mTouch, Omniscient Code Generation, PICC, PICC-18, PICDEM, PICDEM.net, PICkit, PICtail, REAL ICE, rfLAB, Select Mode, SQI, Serial Quad I/O, Total Endurance, TSHARC, UniWinDriver, WiperLock, ZENA and Z-Scale are trademarks of Microchip Technology Incorporated in the U.S.A. and other countries.

SQTP is a service mark of Microchip Technology Incorporated in the U.S.A.

GestIC and ULPP are registered trademarks of Microchip Technology Germany II GmbH & Co. & KG, a subsidiary of Microchip Technology Inc., in other countries.

All other trademarks mentioned herein are property of their respective companies.

© 2012, Microchip Technology Incorporated, Printed in the U.S.A., All Rights Reserved.

Printed on recycled paper.

ISBN: 9781620767108

Microchip received ISO/TS-16949:2009 certification for its worldwide headquarters, design and wafer fabrication facilities in Chandler and Tempe, Arizona; Gresham, Oregon and design centers in California and India. The Company's quality system processes and procedures are for its PIC® MCUs and dsPIC® DSCs, KEELOQ® code hopping devices, Serial EEPROMs, microperipherals, nonvolatile memory and analog products. In addition, Microchip's quality system for the design and manufacture of development systems is ISO 9001:2000 certified.

Worldwide Sales and Service

AMERICAS

Corporate Office
2355 West Chandler Blvd.
Chandler, AZ 85224-6199
Tel: 480-792-7200
Fax: 480-792-7277
Technical Support:
http://www.microchip.com/support
Web Address:
www.microchip.com

Atlanta
Duluth, GA
Tel: 678-957-9614
Fax: 678-957-1455

Boston
Westborough, MA
Tel: 774-760-0087
Fax: 774-760-0088

Chicago
Itasca, IL
Tel: 630-285-0071
Fax: 630-285-0075

Cleveland
Independence, OH
Tel: 216-447-0464
Fax: 216-447-0643

Dallas
Addison, TX
Tel: 972-818-7423
Fax: 972-818-2924

Detroit
Farmington Hills, MI
Tel: 248-538-2250
Fax: 248-538-2260

Indianapolis
Noblesville, IN
Tel: 317-773-8323
Fax: 317-773-5453

Los Angeles
Mission Viejo, CA
Tel: 949-462-9523
Fax: 949-462-9608

Santa Clara
Santa Clara, CA
Tel: 408-961-6444
Fax: 408-961-6445

Toronto
Mississauga, Ontario, Canada
Tel: 905-673-0699
Fax: 905-673-6509

ASIA/PACIFIC

Asia Pacific Office
Suites 3707-14, 37th Floor
Tower 6, The Gateway
Harbour City, Kowloon
Hong Kong
Tel: 852-2401-1200
Fax: 852-2401-3431

Australia - Sydney
Tel: 61-2-9868-6733
Fax: 61-2-9868-6755

China - Beijing
Tel: 86-10-8569-7000
Fax: 86-10-8528-2104

China - Chengdu
Tel: 86-28-8665-5511
Fax: 86-28-8665-7889

China - Chongqing
Tel: 86-23-8980-9588
Fax: 86-23-8980-9500

China - Hangzhou
Tel: 86-571-2819-3187
Fax: 86-571-2819-3189

China - Hong Kong SAR
Tel: 852-2943-5100
Fax: 852-2401-3431

China - Nanjing
Tel: 86-25-8473-2460
Fax: 86-25-8473-2470

China - Qingdao
Tel: 86-532-8502-7355
Fax: 86-532-8502-7205

China - Shanghai
Tel: 86-21-5407-5533
Fax: 86-21-5407-5066

China - Shenyang
Tel: 86-24-2334-2829
Fax: 86-24-2334-2393

China - Shenzhen
Tel: 86-755-8864-2200
Fax: 86-755-8203-1760

China - Wuhan
Tel: 86-27-5980-5300
Fax: 86-27-5980-5118

China - Xian
Tel: 86-29-8833-7252
Fax: 86-29-8833-7256

China - Xiamen
Tel: 86-592-2388138
Fax: 86-592-2388130

China - Zhuhai
Tel: 86-756-3210040
Fax: 86-756-3210049

ASIA/PACIFIC

India - Bangalore
Tel: 91-80-3090-4444
Fax: 91-80-3090-4123

India - New Delhi
Tel: 91-11-4160-8631
Fax: 91-11-4160-8632

India - Pune
Tel: 91-20-2566-1512
Fax: 91-20-2566-1513

Japan - Osaka
Tel: 81-6-6152-7160
Fax: 81-6-6152-9310

Japan - Tokyo
Tel: 81-3-6880- 3770
Fax: 81-45-471-6122

Korea - Daegu
Tel: 82-53-744-4301
Fax: 82-53-744-4302

Korea - Seoul
Tel: 82-2-554-7200
Fax: 82-2-558-5932 or
82-2-558-5934

Malaysia - Kuala Lumpur
Tel: 60-3-6201-9857
Fax: 60-3-6201-9859

Malaysia - Penang
Tel: 60-4-227-8870
Fax: 60-4-227-4068

Philippines - Manila
Tel: 63-2-634-9065
Fax: 63-2-634-9069

Singapore
Tel: 65-6334-8870
Fax: 65-6334-8850

Taiwan - Hsin Chu
Tel: 886-3-5778-366
Fax: 886-3-5770-955

Taiwan - Kaohsiung
Tel: 886-7-213-7828
Fax: 886-7-330-9305

Taiwan - Taipei
Tel: 886-2-2508-8600
Fax: 886-2-2508-0102

Thailand - Bangkok
Tel: 66-2-694-1351
Fax: 66-2-694-1350

EUROPE

Austria - Wels
Tel: 43-7242-2244-39
Fax: 43-7242-2244-393

Denmark - Copenhagen
Tel: 45-4450-2828
Fax: 45-4485-2829

France - Paris
Tel: 33-1-69-53-63-20
Fax: 33-1-69-30-90-79

Germany - Munich
Tel: 49-89-627-144-0
Fax: 49-89-627-144-44

Italy - Milan
Tel: 39-0331-742611
Fax: 39-0331-466781

Netherlands - Drunen
Tel: 31-416-690399
Fax: 31-416-690340

Spain - Madrid
Tel: 34-91-708-08-90
Fax: 34-91-708-08-91

UK - Wokingham
Tel: 44-118-921-5869
Fax: 44-118-921-5820

11/27/12

© 2012 Microchip Technology Inc.

OCEAN CHIPS
Океан Электроники
Поставка электронных компонентов

Компания «Океан Электроники» предлагает заключение долгосрочных отношений при поставках импортных электронных компонентов на взаимовыгодных условиях!

Наши преимущества:

- Поставка оригинальных импортных электронных компонентов напрямую с производств Америки, Европы и Азии, а так же с крупнейших складов мира;
- Широкая линейка поставок активных и пассивных импортных электронных компонентов (более 30 млн. наименований);
- Поставка сложных, дефицитных, либо снятых с производства позиций;
- Оперативные сроки поставки под заказ (от 5 рабочих дней);
- Экспресс доставка в любую точку России;
- Помощь Конструкторского Отдела и консультации квалифицированных инженеров;
- Техническая поддержка проекта, помощь в подборе аналогов, поставка прототипов;
- Поставка электронных компонентов под контролем ВП;
- Система менеджмента качества сертифицирована по Международному стандарту ISO 9001;
- При необходимости вся продукция военного и аэрокосмического назначения проходит испытания и сертификацию в лаборатории (по согласованию с заказчиком);
- Поставка специализированных компонентов военного и аэрокосмического уровня качества (Xilinx, Altera, Analog Devices, Intersil, Interpoint, Microsemi, Actel, Aeroflex, Peregrine, VPT, Syfer, Eurofarad, Texas Instruments, MS Kennedy, Miteq, Cobham, E2V, MA-COM, Hittite, Mini-Circuits, General Dynamics и др.);

Компания «Океан Электроники» является официальным дистрибьютором и эксклюзивным представителем в России одного из крупнейших производителей разъемов военного и аэрокосмического назначения **«JONHON»**, а так же официальным дистрибьютором и эксклюзивным представителем в России производителя высокотехнологичных и надежных решений для передачи СВЧ сигналов **«FORSTAR»**.

AVIC JONHON

«JONHON» (основан в 1970 г.)

Разъемы специального, военного и аэрокосмического назначения:

(Применяются в военной, авиационной, аэрокосмической, морской, железнодорожной, горно- и нефтедобывающей отраслях промышленности)

«FORSTAR» (основан в 1998 г.)

ВЧ соединители, коаксиальные кабели, кабельные сборки и микроволновые компоненты:

(Применяются в телекоммуникациях гражданского и специального назначения, в средствах связи, РЛС, а так же военной, авиационной и аэрокосмической отраслях промышленности).

FORSTAR®

Телефон: 8 (812) 309-75-97 (многоканальный)
Факс: 8 (812) 320-03-32
Электронная почта: ocean@oceanchips.ru
Web: http://oceanchips.ru/
Адрес: 198099, г. Санкт-Петербург, ул. Калинина, д. 2, корп. 4, лит. А