ROSE

A Phoenix Mecano Company

Aluminum 01

Standard Industrial Enclosure

For Finishing Services, Product Support, or to Order

Call 1-301-696-9800

UL® / cUL®

- Robust aluminum enclosure for mechanical engineering and automation technology
- Fastening options for DIN rails and mounting plate
- Field enclosure (2 sizes) with open external fastening
- Usable in wide temperature area

Technical Data

Material:

DIN EN 1706 EN AC-AlSi 12 (Fe)

Painting:

powder coating

Color:

RAL 7001, silver gray

special color on request

Ingress protection:

IP 66 to EN 60529

higher protection on request

Impact resistance:

7 Joule to EN 60079-0

Temperature range:

PU (polyurethane) seal (std.):	-40°C to +90°C
CR (chloroprene) seal:	-40°C to +100°C
VMQ(silicone) seal (optional):	-60°C to +130°C

Included in delivery

Aluminum enclosure consisting of lid, seal incl. captive +/- stainless steel screws, base with 2 or 4 earthing screws

Aluminum Standard

Program Range For Painted Enclosures Add 0 to Part #. For Unpainted Enclosures Add 8 to Part #.

Part No.	W x L x H (mm)	DIN rails for terminals TS 15	DIN rails for terminals TS 35	Earthing rail, number of clamps	Mounting plate, thickness in mm [1]	External brackets set [2]	External aluminum hinge pair [3], [4]	Internal hinge pair [2], [4]	Quick lock [5]	Turn bolt fastener [4]
Standard enclosures										
01.05 05 03	45 x 50 x 30									
01.06 06 03	64 x 58 x 34									
01.06 10 03	64 x 98 x 34									
01.06 15 03	64 x 150 x 34									
01.06 19 03	64 x 185 x 34	•								
01.08 08 06	80 x 75 x 57	•			1,5					
01.08 13 06	80 x 125 x 57	•			1,5					
01.08 18 06	80 x 175 x 57	•			1,5					
01.08 25 05	80 x 250 x 52	•								
01.10 10 08	100 x 100 x 81	•			1,5	•	•		•	
01.10 16 08	100 x 160 x 81	•			1,5	•	•		•	
01.10 20 08	100 x 200 x 81	•			1,5	•	•		•	
01.12 12 08	120 x 122 x 81		•	6	1,5	•	•		•	
01.12 12 09	120 x 122 x 91		•	6	1,5	•	•		•	
01.12 22 08	120 x 220 x 81		•	13	1,5	•	•		•	
01.12 22 09	120 x 220 x 91		•	13	1,5	•	•		•	
01.12 22 12	120 x 220 x 118		•	13	1,5	•	•		•	
01.12 36 08	120 x 360 x 81		•	23	1,5	•	•		•	
01.14 14 09	140 x 140 x 91		•	6	1,5	•	•		•	
01.14 20 09	140 x 200 x 91		•	11	1,5	•	•	•	•	•
01.16 16 09	160 x 160 x 91		•	8	1,5	•	•	•	•	•
01.16 26 09	160 x 260 x 91		•	16	1,5	•	•	•	•	•
01.16 36 09	160 x 360 x 91		•	23	1,5	•	•	•	•	•
01.16 56 09	160 x 560 x 91		•	36	2,0	•	•	•	•	•
01.18 18 10	180 x 180 x 101		•	8	1,5	•	•	•	•	•
01.18 28 10	180 x 280 x 101		•	17	1,5	•	•	•	•	•
01.23 10 11	230 x 100 x 111		•	-	1,5	•	•	•	•	•
01.23 20 11	232 x 202 x 111		•	10	1,5	•	•	•	•	•
01.23 20 18	232 x 202 x 181		•	10	1,5	•	•	•	•	•
01.23 28 11	230 x 280 x 111		•	16	1,5	•	•	•	•	•
01.23 33 11	230 x 330 x 111		•	21	1,5	•	•	•	•	•
01.23 33 18	230 x 330 x 181		•	21	1,5	•	•	•	•	•
01.23 40 11	230 x 400 x 111		•	25	2	•	•	•	•	•
01.23 40 23	230 x 400 x 225		•	25	2	•	•	•	•	•
01.23 60 11	230 x 600 x 111		•	40	2	•	•	•	•	•
01.31 40 11	313 x 404 x 111		•	25	2	•	•	•	•	•
01.31 40 14	312 x 403 x 141		•	25	2	•	•	•	•	•
01.31 40 18	313 x 404 x 181		•	25	2	•	•	•	•	•
01.31 40 23	313 x 404 x 227		•	25	2	•	•	•	•	•
01.31 60 11	310 x 600 x 111		•	40	2	•	•	•	•	•
01.31 60 18	310 x 600 x 181		•	40	2	•	•	•	•	•
01.60 60 20	600 x 600 x 202		•		2,5					
Field enclosure with integrated external fastening										
01.06 12 00	64 x 115 x 34									
01.06 19 00	64 x 185 x 34									

[1]) galvanized sheet steel [2]) stainless steel [3]) diecast alu [4]) Please quote installation side A-D when ordering [5]) on request

Other accessories

EMC screening (without type 01.60 60 20)
SWB/SBG/SBGL corrosion protection (RAL 5009)
Allen lid screws (without type 01.60 60 20)
Silicone lid seal up to +130°C
Sealable lid screws in steel (without type 01.60 60 20)

Terminal mounting

	Phoenix															Earth conductor connection													
DIN rail TS 15	X	X	X																										
DIN rail TS 35				X	X	X	X	X	X	X	X	X	X	X	X														
Voltage (V)	250	400	500	500	800	800	800	800	800	800	1000	1000	1000	1000	1000														
Current (A)	24	32	41	17	24	32	41	57	76	101	150	150	232	309	415														
Nom. cross section (mm²)	2.5	3	5	1.5	2.5	2.5	4	6	10	16	35	50	95	150	240														
Terminal width (mm)	5.2	5.2	6.2	4.2	5.2	5.2	6.2	8.2	10.2	12.2	15.2	20	25	31	36														
Terminal type / Type	MBK 2,5 E	MBK 3 / E-Z	MBK 5 / E-Z	UK 1,5 N	UK 2,5 N	UK 3 N	UK 5 N	UK 6 N	UK 10 N	UK 16 N	UK 35	UKH 50	UKH 95	UKH 150	UKH 240	MSLKG 5 insulated, green/yellow	USLKG 1,5 N insulated green/yellow	USLKG 2,5 N insulated green/yellow	USLKG 6 N insulated green/yellow	USLKG 10 N insulated green/yellow	USKLG 16 N insulated green/yellow	USLKG 3 insulated green/yellow	USLKG 5 insulated green/yellow	USLKG 50 insulated green/yellow	USLKG 95 insulated green/yellow		Earthing bar 2.5 mm² with cable lug max. 10 mm²	Earthing screw M4 with cable lug max. 6 mm²	M6 with cable lug max. 35 mm²	
01.05 05 03																													
01.06 06 03	4																											1	
01.06 10 03	11																											2	
01.06 15 03	16																											2	
01.06 19 03	28																											2	
01.08 08 06	9	9	7																									2	
01.08 13 06	18	18	15																									2	
01.08 18 06	28	28	23																									2	
01.08 25 05	43	43	36																									2	
01.10 10 08	14	14	11	17																								2	
01.10 16 08	25	25	21	31																								2	
01.10 20 08	33	33	27	41																								2	
01.12 12 08				20	16	16	13	10																		5			
01.12 12 09				20	16	16	13	10																		5		4	
01.12 22 08				43	35	35	29	22	17	15																13		4	
01.12 22 09				43	35	35	29	22	17	15																13		4	
01.12 22 12				44	35	35	30	22	18	15																13		4	
01.12 36 08				76	61	61	51	39	31	26																23		4	
01.14 14 09				24	20	20	16	12	10																	6		4	
01.14 20 09				39	31	31	26	20	16	13																11		4	
01.16 16 09				29	23	23	19	14	11	10																8		4	
01.16 26 09				53	42	42	35	27	21	18	14															16		4	
01.16 36 09				76	61	61	51	39	31	26	21															23		4	
01.16 56 09				124	100	100	84	63	51	42	34															38		4	
01.18 18 10				34	27	27	23	17	14	11																8		4	
01.18 28 10				57	46	46	39	29	23	19	15															17		4	
01.23 10 11				45	36	36	30	23	18																	13		4	
01.23 20 11				39*	31*	31*	26*	20*	16*	13*	10*	8								as required						12		4	
01.23 20 18				39*	31*	31*	26*	20*	16*	13*	10*	8														12		4	
01.23 28 11				57*	46*	46*	39*	29*	23*	19*	15*	12														16		4	
01.23 33 11				69*	56*	56*	47*	35*	28*	23*	19*	14														21		4	
01.23 33 18				69*	56*	56*	47*	35*	28*	23*	19*	14														21		4	
01.23 40 11				85*	69*	69*	57*	43*	35*	29*	23*	17														25		4	
01.23 40 23				85*	69*	69*	57*	43*	35*	29*	23*	17														25		4	
01.23 60 11				133*	107*	107*	90*	68*	54*	45*	36*	27														41		4	
01.31 40 11				85**	69**	69**	57**	43**	35**	29**	23**	17*														26		4	
01.31 40 14				85**	69**	69**	57**	43**	35**	29**	23**	17*	14													26		4	
01.31 40 18				85**	69**	69**	57**	43**	35**	29**	23**	17*	14													26		4	
01.31 40 23				85**	69**	69**	57**	43**	35**	29**	23**	17*	14													26		4	
01.31 60 11				133**	107**	107**	90**	68**	54**	45**	36**	27*														40		4	
01.31 60 18				133**	107**	107**	90**	68**	54**	45**	36**	27*	22													40		4	
01.60 60 20				131**	106**	106**	89**	67**	54**	45**	36**	27**	22**	17	15											40		4	
Field enclosure with integrated external fastening																													
01.06 12 00																													
01.06 19 00																													

* 2 DIN rails possible = double number of terminals
** 3 DIN rails possible = triple number of terminals

Terminal mounting

	Weidmüller																					Earth conductor connection			
DIN rail TS 15					X	X	X	X																	
DIN rail TS 35									X	X	X	X	X	X	X	X	X	X	X	X					
Voltage (V)	500	400	400	400	250	400	250	400	500	800	800	800	1000	1000	1000	1000	1000	1000	1000	1000					
Current (A)	24	32	32	32	17	15	24	32	24	24	32	41	57	76	125	192	232	269	309	415					
Nom. cross section (mm²)	2,5	4	4	4	1,5	1,5	2,5	4	2,5	2,5	4	6	10	16	35	70	95	120	150	240					
Terminal width (mm)	38	38	52	92	5,1	3,5	5,1	6,1	5,1	5,1	6,1	8	10	12	16	20,5	27	27	32	36					
Terminal type Type	MK 3/4 (4-pole)	BK 4 (4-pole)	BK 6 (6-pole)	BK 12 (12-pole)	AKZ 1,5	WDU 1,5 / R 3,5	AKZ 2,5	AKZ 4	WDU 2,5 N	WDU 2,5	WDU 4	WDU 6	WDU 10	WDU 16	WDU 35	WDU 70 N	WDU 70 / 95	WDU 95 / 120 N	WDU 120 / 150	WDU 240		WPE	Earthing bar 2.5 mm² with cable lug max. 10 mm²	Earthing screw M4 with cable lug max. 6 mm²	M6 with cable lug max. 35 mm²
01.05 05 03	1																								
01.06 06 03		1																						1	
01.06 10 03			1																					2	
01.06 15 03				1																				2	
01.06 19 03				1																				2	
01.08 08 06					8	11	8	6	8															2	
01.08 13 06					18	26	18	15	18															2	
01.08 18 06					28	40	28	23	28															2	
01.08 25 05					43	61	43	36	43															2	
01.10 10 08					13	18	13	10	13															2	
01.10 16 08					25	36	25	21	25															2	
01.10 20 08					33	47	33	27	33															2	
01.12 12 08										16	13	10											5		
01.12 12 09										16	13	10	8										5		4
01.12 22 08										35	29	22	17										13		4
01.12 22 09										35	29	22	17										13		4
01.12 22 12										36	30	22	18										13		4
01.12 36 08										63	52	39	31									as required	23		4
01.14 14 09										20	16	12	10										6		4
01.14 20 09										32	26	20	16	13									11		4
01.16 16 09										23	19	14	11	9									8		4
01.16 26 09										43	36	27	21	18									16		4
01.16 36 09										63	52	39	31	26									23		4
01.16 56 09										103	86	64	51	43									38		4
01.18 18 10										28	23	17	14	11									8		4
01.18 28 10										47	39	29	23	19									17		4
01.23 10 11											31	23	18	15									13		4
01.23 20 11										32*	26*	20*	16*	13*	10	7							12		4
01.23 20 18										32*	26*	20*	16*	13*	10	7							12		4
01.23 28 11										47*	39*	29*	23*	19*	14	11							16		4
01.23 33 11										57*	48*	36*	28*	24*	18	14							21		4
01.23 33 18										57*	48*	36*	28*	24*	18	14							21		4
01.23 40 11										71*	59*	44*	35*	29*	22*	17							25		4
01.23 40 23										71*	59*	44*	35*	29*	22*	17	13	13					25		4
01.23 60 11										111*	92*	69*	55*	46*	34*	27							41		4
01.31 40 11										71**	59**	44**	35**	29**	22*	17							26		4
01.31 40 14										71**	59**	44**	35**	29**	22*	17							26		4
01.31 40 18										71**	59**	44**	35**	29**	22*	17	13	13					26		4
01.31 40 23										71**	59**	44**	35**	29**	22*	17	13	13					26		4
01.31 60 11										111**	92**	69**	55**	46**	34*	27							40		4
01.31 60 18										111**	92**	69**	55**	46**	34*	27	20	20					40		4
01.60 60 20										109**	91**	68**	54**	45**	34**	26**	20**	20**	15	15			40		4
Field enclosure with integrated external fastening																									
01.06 12 00			1																						
01.06 19 00				1																					

* 2 DIN rails possible = double number of terminals
** 3 DIN rails possible = triple number of terminals

Accessories

External brackets
set = 4 pcs

Order No.	for enclosure
10.03 11 01	01.08 08 06 - 01.10 20 08
10.03 11 02	01.12 12 08 - 01.31 60 18

Type 10.03 11 01

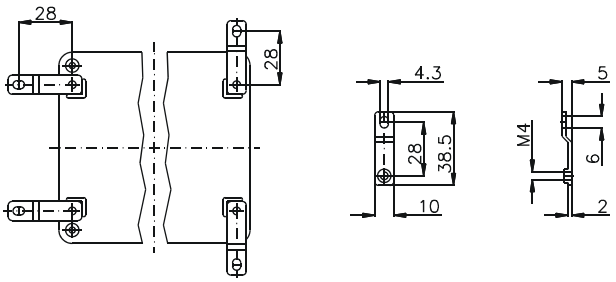

Type 10.03 11 02

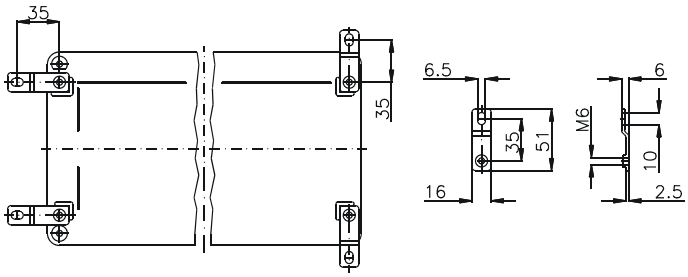

External hinge
opening angle 150°
set = 2 pcs

Order No. ***10.02 70 01***

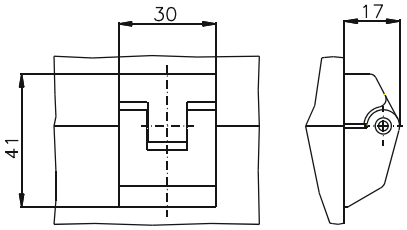

Internal hinge
opening angle 95°
set = 2 pcs

Order No. ***10.02 20 01***

Type: **01.05 05 03** External dimensions: **45 x 50 x 30 mm** Weight: **91 g**

DIN rail length in mm	max. fitting length in mm	Earthing rail clamp	Mounting plate (thickness in mm)	External mounting brackets	External hinge* set	EMC version	Internal hinge* set	SWB / SBG / SBGL Corr.protection	Allen lid screws	Silicone lid seal	Sealable lid screws in steel	Turn bolt fastener on request	Quick lock
						•		•	•		•		

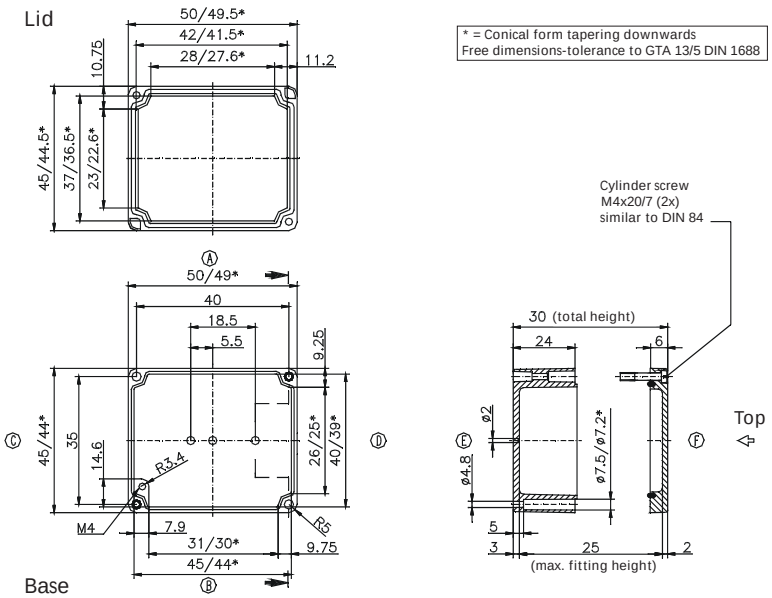

Maximum number of cable glands ***to DIN 50262****

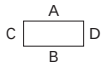

M	Corner dim.	Side A/B	Side C/D	PG	Corner dim.	Side A/B	Side C/D
12	17.25	2	1	7	17.25	2	1
16	25.30			9	21.85	1	
20	27.60			11	25.30		
25	37.95			13.5	27.60		
32	48.30			16	31.05		
40	60.95			21	37.95		
50	69.00			29	48.30		
63	74.75			36	60.95		
				42	69.00		
				48	74.75		

Type: **01.06 06 03** External dimensions: **64 x 58 x 34 mm** Weight: **165 g**

DIN rail length in mm	max. fitting length in mm	Earthing rail clamp	Mounting plate (thickness in mm)	External mounting brackets	External hinge* set	EMC version	Internal hinge* set	SWB / SBG / SBGL Corr.protection	Allen lid screws	Silicone lid seal	Sealable lid screws in steel	Turn bolt fastener on request	Quick lock
						•		•	•	•	•		

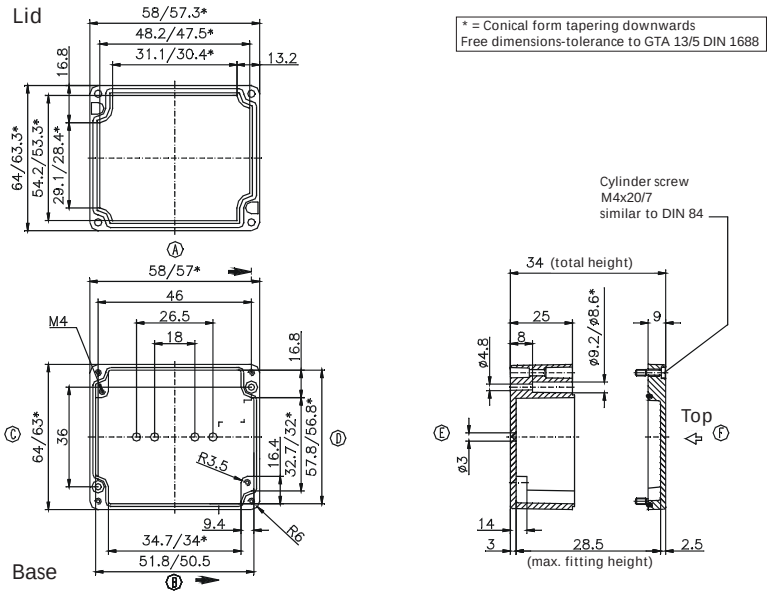

Maximum number of cable glands ***to DIN 50262****

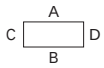

M	Corner dim.	Side A/B	Side C/D	PG	Corner dim.	Side A/B	Side C/D
12	17.25	2	1	7	17.25	2	1
16	25.30			9	21.85	1	1
20	27.60			11	25.30		
25	37.95			13.5	27.60		
32	48.30			16	31.05		
40	60.95			21	37.95		
50	69.00			29	48.30		
63	74.75			36	60.95		
				42	69.00		
				48	74.75		

* Please quote mounting side

Type: ***01.06 10 03*** External dimensions: ***64 x 98 x 34 mm*** Weight: ***224 g***

DIN rail length in mm	max. fitting length in mm	Earthing rail clamp	Mounting plate (thickness in mm)	External mounting brackets	External hinge* set	EMC version	Internal hinge* set	SWB / SBG / SBGL Corr.protection	Allen lid screws	Silicone lid seal	Sealable lid screws in steel	Turn bolt fastener on request	Quick lock
TS 15													
87.5						•		•	•	•	•		

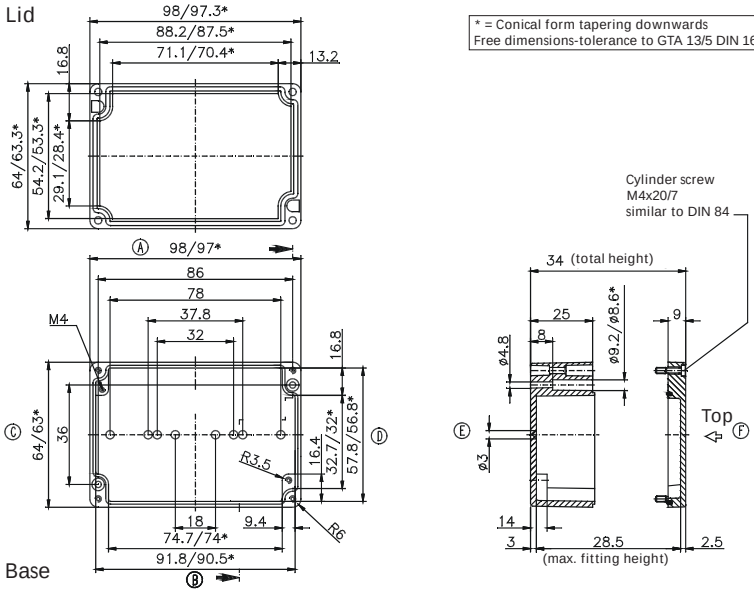

Maximum number of cable glands ***to DIN 50262****

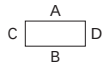

M	Corner dim.	Side A/B	Side C/D	***PG***	Corner dim.	Side A/B	Side C/D
12	17.25	4	1	7	17.25	4	1
16	25.30			9	21.85	3	1
20	27.60			11	25.30		
25	37.95			13.5	27.60		
32	48.30			16	31.05		
40	60.95			21	37.95		
50	69.00			29	48.30		
63	74.75			36	60.95		
				42	69.00		
				48	74.75		

Type: ***01.06 12 00*** External dimensions: ***64 x 115 x 34 mm*** Weight: ***290 g***

DIN rail length in mm	max. fitting length in mm	Earthing rail clamp	Mounting plate (thickness in mm)	External mounting brackets	External hinge* set	EMC version	Internal hinge* set	SWB / SBG / SBGL Corr.protection	Allen lid screws	Silicone lid seal	Sealable lid screws in steel	Turn bolt fastener on request	Quick lock
						•		•	•	•	•		

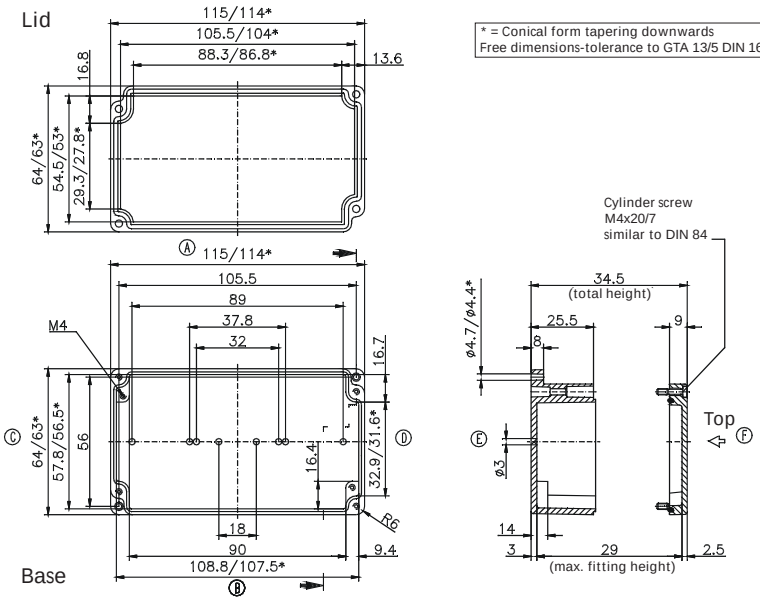

Maximum number of cable glands ***to DIN 50262****

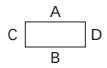

M	Corner dim.	Side A/B	Side C/D	***PG***	Corner dim.	Side A/B	Side C/D
12	17.25	5	1	7	17.25	5	1
16	25.30			9	21.85	4	1
20	27.60			11	25.30		
25	37.95			13.5	27.60		
32	48.30			16	31.05		
40	60.95			21	37.95		
50	69.00			29	48.30		
63	74.75			36	60.95		
				42	69.00		
				48	74.75		

* Please quote mounting side

Type: **01.06 15 03** External dimensions: ***64 x 150 x 34 mm*** Weight: ***316 g***

DIN rail length in mm	max. fitting length in mm	Earthing rail clamp	Mounting plate (thickness in mm)	External mounting brackets	External hinge* set	EMC version	Internal hinge* set	SWB / SBG / SBGL Corr.protection	Allen lid screws	Silicone lid seal	Sealable lid screws in steel	Turn bolt fastener on request	Quick lock
TS 15													
139						•		•	•	•	•		

Maximum number of cable glands ***to DIN 50262****

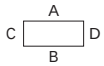

M	Cor-ner dim.	Side A/B	Side C/D	***PG***	Cor-ner dim.	Side A/B	Side C/D
12	17.25	8	1	7	17.25	8	1
16	25.30			9	21.85	6	1
20	27.60			11	25.30		
25	37.95			13.5	27.60		
32	48.30			16	31.05		
40	60.95			21	37.95		
50	69.00			29	48.30		
63	74.75			36	60.95		
				42	69.00		
				48	74.75		

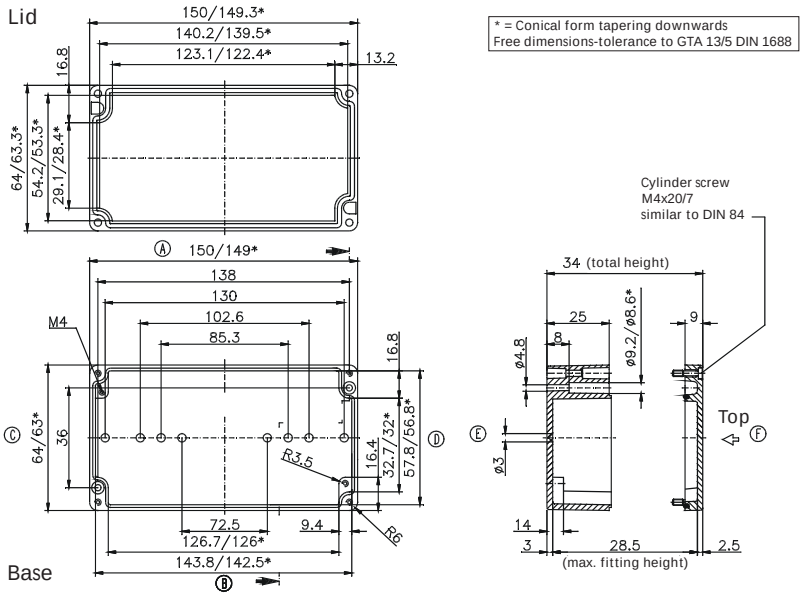

Type: **01.06 19 03** External dimensions: ***64 x 185 x 34 mm*** Weight: ***500 g***

DIN rail length in mm	max. fitting length in mm	Earthing rail clamp	Mounting plate (thickness in mm)	External mounting brackets	External hinge* set	EMC version	Internal hinge* set	SWB / SBG / SBGL Corr.protection	Allen lid screws	Silicone lid seal	Sealable lid screws in steel	Turn bolt fastener on request	Quick lock
TS 15													
174						•		•	•	•	•		

Maximum number of cable glands ***to DIN 50262****

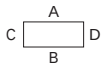

M	Cor-ner dim.	Side A/B	Side C/D	***PG***	Cor-ner dim.	Side A/B	Side C/D
12	17.25	10		7	17.25	10	
16	25.30			9	21.85		
20	27.60			11	25.30		
25	37.95			13.5	27.60		
32	48.30			16	31.05		
40	60.95			21	37.95		
50	69.00			29	48.30		
63	74.75			36	60.95		
				42	69.00		
				48	74.75		

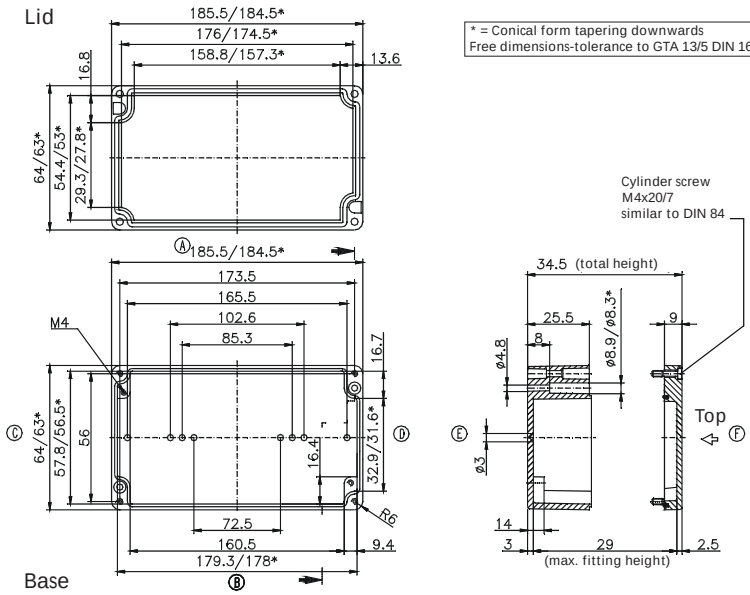

* Please quote mounting side

Type: ***01.06 19 00*** External dimensions: ***64 x 185 x 34 mm*** Weight: ***420 g***

DIN rail length in mm	max. fitting length in mm	Earthing rail clamp	Mounting plate (thickness in mm)	External mounting brackets	External hinge* set	EMC version	Internal hinge* set	SWB / SBG / SBGL Corr.protection	Allen lid screws	Silicone lid seal	Sealable lid screws in steel	Turn bolt fastener on request	Quick lock
TS 15													
174						•		•	•	•	•		

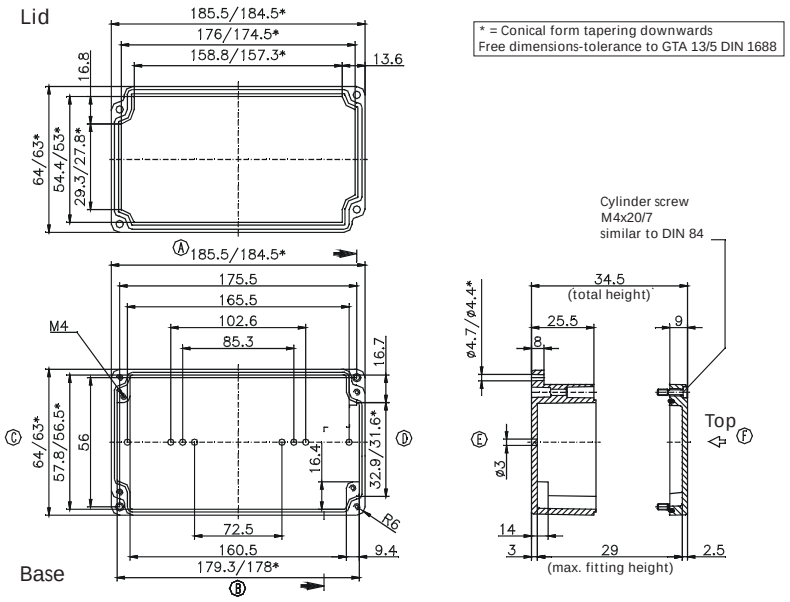

* = Conical form tapering downwards
Free dimensions-tolerance to GTA 13/5 DIN 1688

Maximum number of cable glands ***to DIN 50262****

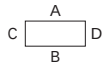

M	Corner dim.	Side A/B	Side C/D	***PG***	Corner dim.	Side A/B	Side C/D
12	17.25	10	1	7	17.25	10	1
16	25.30			9	21.85	7	1
20	27.60			11	25.30		
25	37.95			13.5	27.60		
32	48.30			16	31.05		
40	60.95			21	37.95		
50	69.00			29	48.30		
63	74.75			36	60.95		
				42	69.00		
				48	74.75		

Type: ***01.08 08 06*** External dimensions: ***80 x 75 x 57 mm*** Weight: ***360 g***

DIN rail length in mm	max. fitting length in mm	Earthing rail clamp	Mounting plate (thickness in mm)	External mounting brackets	External hinge* set	EMC version	Internal hinge* set	SWB / SBG / SBGL Corr.protection	Allen lid screws	Silicone lid seal	Sealable lid screws in steel	Turn bolt fastener on request	Quick lock
TS 15													
63	46		1.5	•		•		•	•	•	•		•

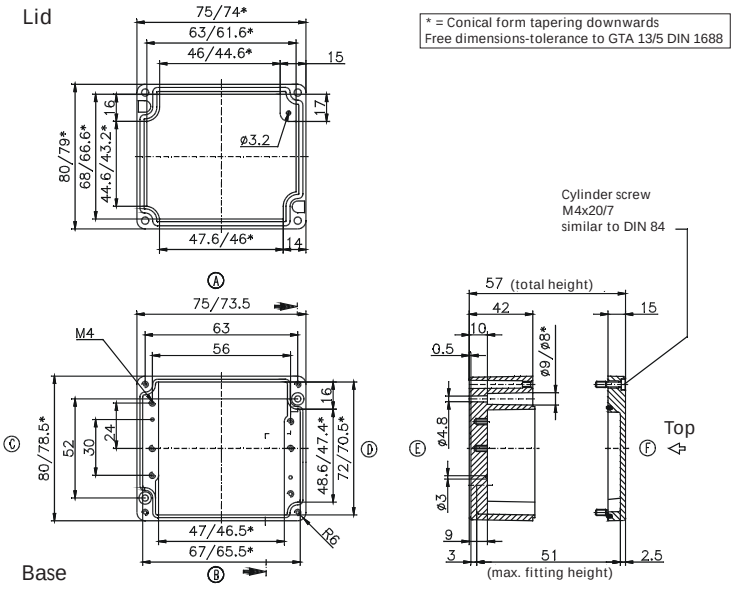

* = Conical form tapering downwards
Free dimensions-tolerance to GTA 13/5 DIN 1688

Maximum number of cable glands ***to DIN 50262****

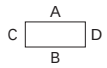

M	Corner dim.	Side A/B	Side C/D	***PG***	Corner dim.	Side A/B	Side C/D
12	17.25	3	5	7	17.25	2	5
16	25.30	1	2	9	21.85	1	2
20	27.60	1	2	11	25.30	1	2
25	37.95	1	1	13.5	27.60	1	2
32	48.30			16	31.05	1	1
40	60.95			21	37.95		
50	69.00			29	48.30		
63	74.75			36	60.95		
				42	69.00		
				48	74.75		

* Please quote mounting side

Type: ***01.08 13 06*** External dimensions: ***80 x 125 x 57 mm*** Weight: ***500 g***

DIN rail length in mm	max. fitting length in mm	Earthing rail clamp	Mounting plate (thickness in mm)	External mounting brackets	External hinge* set	EMC version	Internal hinge* set	SWB / SBG / SBGL Corr.protection	Allen lid screws	Silicone lid seal	Sealable lid screws in steel	Turn bolt fastener on request	Quick lock
TS 15													
113	96		1.5	•		•		•	•		•		•

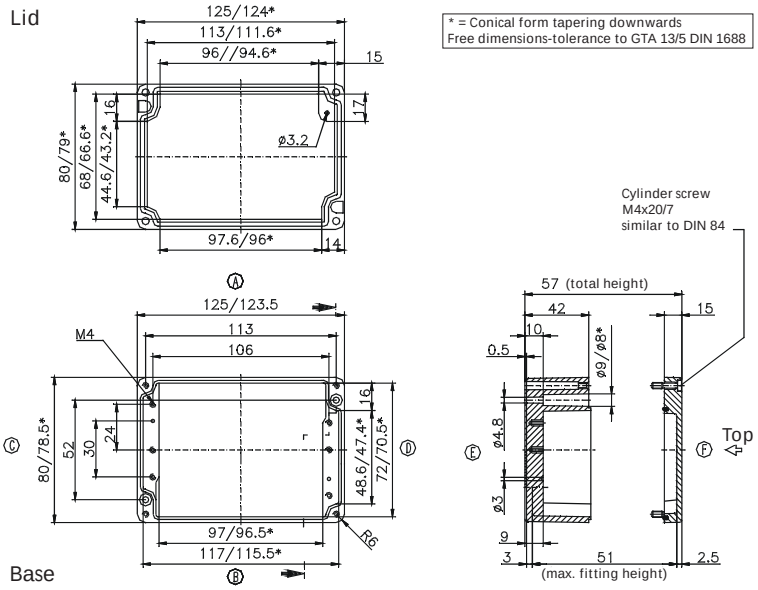

* = Conical form tapering downwards
Free dimensions-tolerance to GTA 13/5 DIN 1688

Maximum number of cable glands ***to DIN 50262****

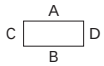

M	Corner dim.	Side A/B	Side C/D	***PG***	Corner dim.	Side A/B	Side C/D
12	17.25	9	5	7	17.25	8	5
16	25.30	4	2	9	21.85	6	2
20	27.60	3	2	11	25.30	3	2
25	37.95	2	1	13.5	27.60	3	2
32	48.30			16	31.05	2	1
40	60.95			21	37.95	2	
50	69.00			29	48.30		
63	74.75			36	60.95		
				42	69.00		
				48	74.75		

Type: ***01.08 18 06*** External dimensions: ***80 x 175 x 57 mm*** Weight: ***630 g***

DIN rail length in mm	max. fitting length in mm	Earthing rail clamp	Mounting plate (thickness in mm)	External mounting brackets	External hinge* set	EMC version	Internal hinge* set	SWB / SBG / SBGL Corr.protection	Allen lid screws	Silicone lid seal	Sealable lid screws in steel	Turn bolt fastener on request	Quick lock
TS 15													
163	146		1.5	•		•		•	•	•	•		•

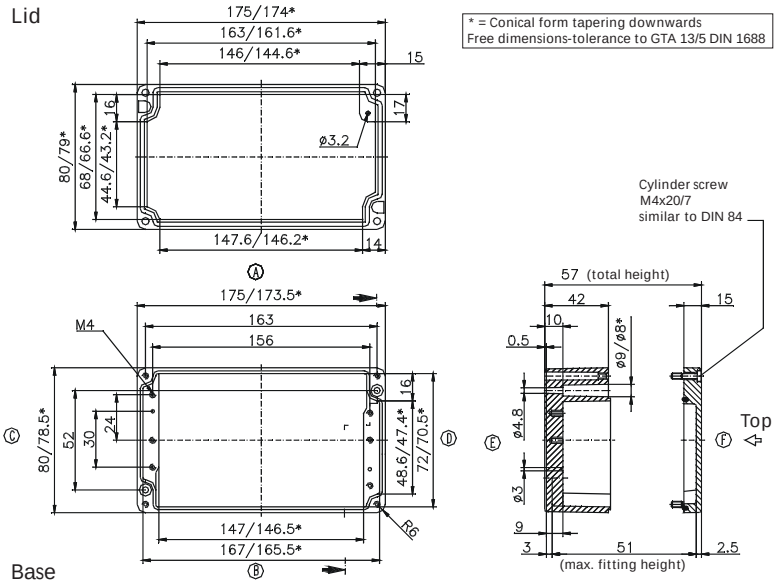

* = Conical form tapering downwards
Free dimensions-tolerance to GTA 13/5 DIN 1688

Maximum number of cable glands ***to DIN 50262****

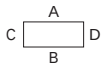

M	Corner dim.	Side A/B	Side C/D	***PG***	Corner dim.	Side A/B	Side C/D
12	17.25	14	5	7	17.25	14	5
16	25.30	6	2	9	21.85	9	2
20	27.60	5	2	11	25.30	6	2
25	37.95	3	1	13.5	27.60	5	2
32	48.30			16	31.05	4	1
40	60.95			21	37.95	3	
50	69.00			29	48.30		
63	74.75			36	60.95		
				42	69.00		
				48	74.75		

* Please quote mounting side

Type: ***01.08 25 05*** External dimensions: ***80 x 250 x 52 mm*** Weight: ***818 g***

DIN rail length in mm	max. fitting length in mm	Earthing rail clamp	Mounting plate (thickness in mm)	External mounting brackets	External hinge* set	EMC version	Internal hinge* set	SWB / SBG / SBGL Corr.protection	Allen lid screws	Silicone lid seal	Sealable lid screws in steel	Turn bolt fastener on request	Quick lock
TS 15													
238	220			•		•		•	•	•	•		•

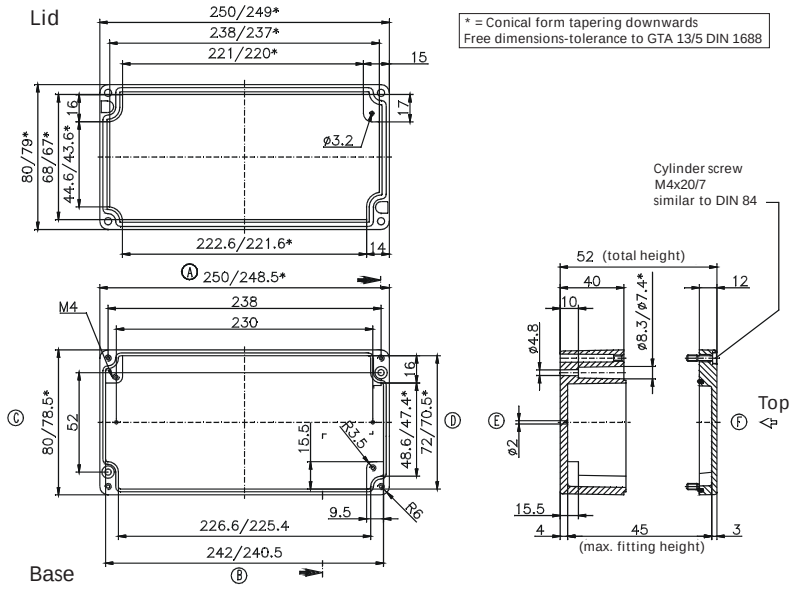

Maximum number of cable glands ***to DIN 50262****

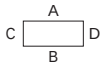

M	Corner dim.	Side A/B	Side C/D	***PG***	Corner dim.	Side A/B	Side C/D
12	17.25	23	6	7	17.25	22	6
16	25.30	9	2	9	21.85	15	3
20	27.60	8	2	11	25.30	9	2
25	37.95	5	1	13.5	27.60	8	2
32	48.30			16	31.05	6	1
40	60.95			21	37.95	5	1
50	69.00			29	48.30		
63	74.75			36	60.95		
				42	69.00		
				48	74.75		

Type: ***01.10 10 08*** External dimensions: ***100 x 100 x 81 mm*** Weight: ***800 g***

DIN rail length in mm	max. fitting length in mm	Earthing rail clamp	Mounting plate (thickness in mm)	External mounting brackets	External hinge* set	EMC version	Internal hinge* set	SWB / SBG / SBGL Corr.protection	Allen lid screws	Silicone lid seal	Sealable lid screws in steel	Turn bolt fastener on request	Quick lock
TS 15/35													
87,5	70		1.5	•	•	•		•	•	•	•		•

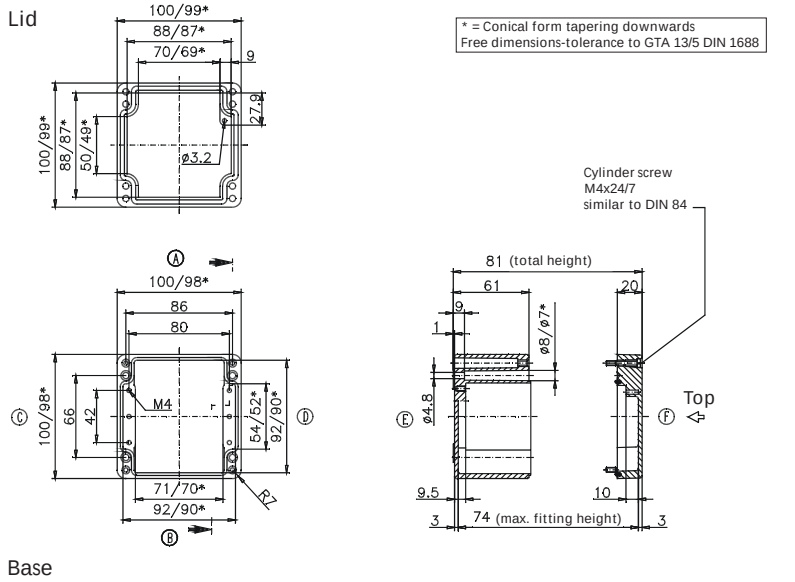

Maximum number of cable glands ***to DIN 50262****

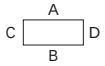

M	Corner dim.	Side A/B	Side C/D	***PG***	Corner dim.	Side A/B	Side C/D
12	17.25	12	9	7	17.25	12	9
16	25.30	6	4	9	21.85	8	5
20	27.60	5	3	11	25.30	5	4
25	37.95	2	1	13.5	27.60	5	3
32	48.30	1	1	16	31.05	4	2
40	60.95			21	37.95	2	1
50	69.00			29	48.30	1	1
63	74.75			36	60.95		
				42	69.00		
				48	74.75		

* Please quote mounting side

Type: ***01.10 16 08*** External dimensions: ***100 x 160 x 81 mm*** Weight: ***870 g***

DIN rail length in mm	max. fitting length in mm	Earthing rail clamp	Mounting plate (thickness in mm)	External mounting brackets	External hinge* set	EMC version	Internal hinge* set	SWB / SBG / SBGL Corr.protection	Allen lid screws	Silicone lid seal	Sealable lid screws in steel	Turn bolt fastener on request	Quick lock
TS 15/35													
148	130		1.5	•	•	•		•	•		•		•

Maximum number of cable glands ***to DIN 50262****

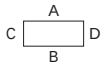

M	Corner dim.	Side A/B	Side C/D	***PG***	Corner dim.	Side A/B	Side C/D
12	17.25	24	9	7	17.25	22	8
16	25.30	11	4	9	21.85	17	5
20	27.60	10	3	11	25.30	11	4
25	37.95	4	1	13.5	27.60	10	3
32	48.30	3	1	16	31.05	8	2
40	60.95			21	37.95	4	1
50	69.00			29	48.30	3	1
63	74.75			36	60.95		
				42	69.00		
				48	74.75		

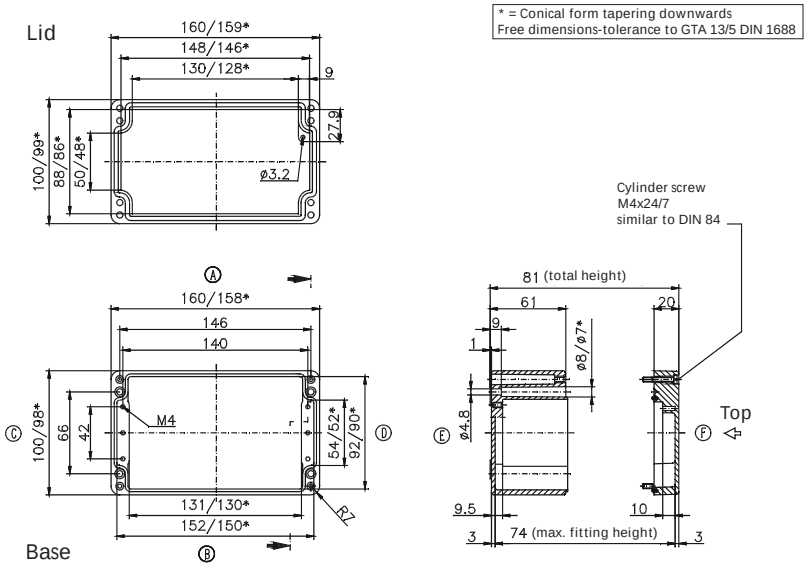

Type: ***01.10 20 08*** External dimensions: ***100 x 200 x 81 mm*** Weight: ***1200 g***

DIN rail length in mm	max. fitting length in mm	Earthing rail clamp	Mounting plate (thickness in mm)	External mounting brackets	External hinge* set	EMC version	Internal hinge* set	SWB / SBG / SBGL Corr.protection	Allen lid screws	Silicone lid seal	Sealable lid screws in steel	Turn bolt fastener on request	Quick lock
TS 15/35													
188	170		1.5	•	•	•		•	•	•	•		•

Maximum number of cable glands ***to DIN 50262****

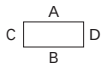

M	Corner dim.	Side A/B	Side C/D	***PG***	Corner dim.	Side A/B	Side C/D
12	17.25	32	9	7	17.25	30	9
16	25.30	14	4	9	21.85	21	5
20	27.60	12	3	11	25.30	12	4
25	37.95	5	1	13.5	27.60	12	3
32	48.30	3	1	16	31.05	10	2
40	60.95			21	37.95	5	1
50	69.00			29	48.30	3	1
63	74.75			36	60.95		
				42	69.00		
				48	74.75		

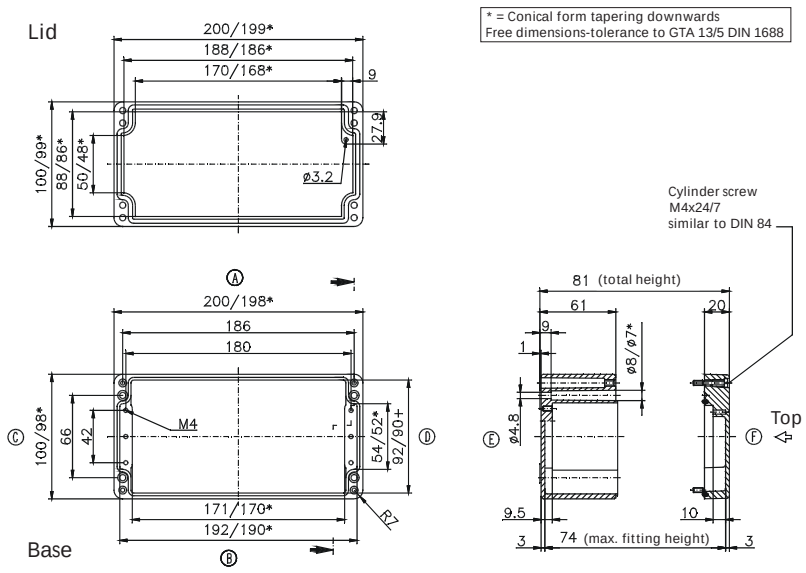

* Please quote mounting side

Type: ***01.12 12 08*** External dimensions: ***120 x 122 x 81 mm*** Weight: ***1044 g***

DIN rail length in mm	max. fitting length in mm	Earthing rail clamp	Mounting plate (thickness in mm)	External mounting brackets	External hinge* set	EMC version	Internal hinge* set	SWB / SBG / SBGL Corr.protection	Allen lid screws	Silicone lid seal	Sealable lid screws in steel	Turn bolt fastener on request	Quick lock
TS 35													
107	85	5	1.5	•	•	•		•	•	•	•		•

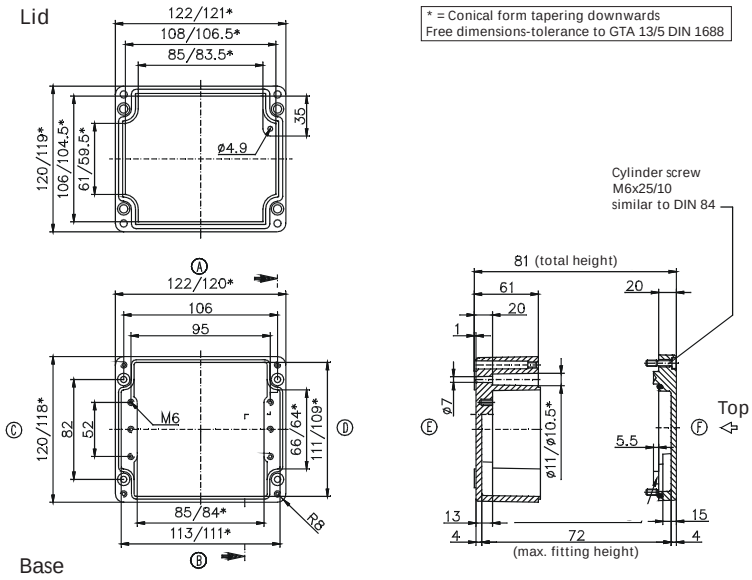

Maximum number of cable glands ***to DIN 50262****

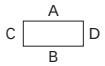

M	Corner dim.	Side A/B	Side C/D	***PG***	Corner dim.	Side A/B	Side C/D
12	17.25	10	11	7	17.25	10	11
16	25.30	5	5	9	21.85	8	6
20	27.60	4	4	11	25.30	5	4
25	37.95	2	2	13.5	27.60	4	3
32	48.30	1	1	16	31.05	3	2
40	60.95			21	37.95	2	2
50	69.00			29	48.30	2	1
63	74.75			36	60.95		
				42	69.00		
				48	74.75		

Type: ***01.12 12 09*** External dimensions: ***120 x 122 x 91 mm*** Weight: ***1170 g***

DIN rail length in mm	max. fitting length in mm	Earthing rail clamp	Mounting plate (thickness in mm)	External mounting brackets	External hinge* set	EMC version	Internal hinge* set	SWB / SBG / SBGL Corr.protection	Allen lid screws	Silicone lid seal	Sealable lid screws in steel	Turn bolt fastener on request	Quick lock
TS 35													
107	85	5	1.5	•	•	•		•	•	•	•		•

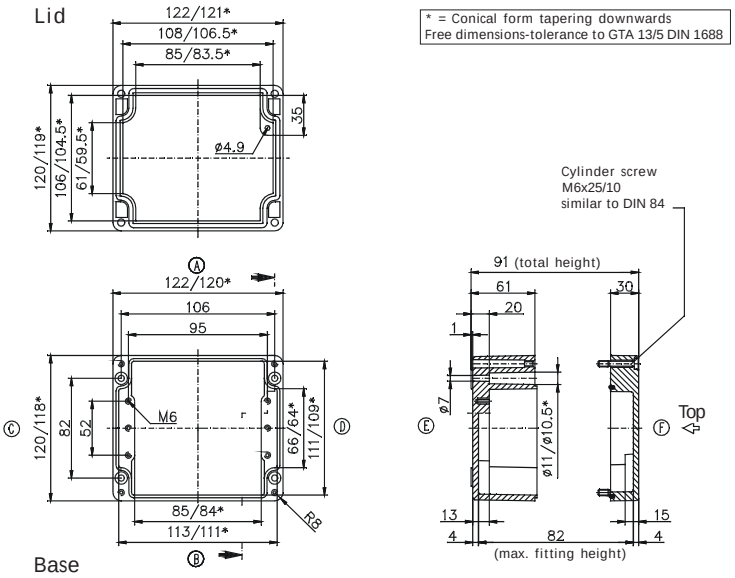

Maximum number of cable glands ***to DIN 50262****

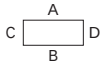

M	Corner dim.	Side A/B	Side C/D	***PG***	Corner dim.	Side A/B	Side C/D
12	17.25	10	11	7	17.25	10	11
16	25.30	5	5	9	21.85	8	6
20	27.60	4	4	11	25.30	5	4
25	37.95	2	2	13.5	27.60	4	3
32	48.30	1	1	16	31.05	3	2
40	60.95			21	37.95	2	2
50	69.00			29	48.30	1	1
63	74.75			36	60.95		
				42	69.00		
				48	74.75		

* Please quote mounting side

Type: ***01.12 22 08*** External dimensions: ***120 x 220 x 81 mm*** Weight: ***1445 g***

DIN rail length in mm	max. fitting length in mm	Earthing rail clamp	Mounting plate (thickness in mm)	External mounting brackets	External hinge* set	EMC version	Internal hinge* set	SWB / SBG / SBGL Corr.protection	Allen lid screws	Silicone lid seal	Sealable lid screws in steel	Turn bolt fastener on request	Quick lock
TS 35													
205	183	13	1.5	•	•	•		•	•	•	•		•

Maximum number of cable glands ***to DIN 50262****

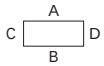

M	Corner dim.	Side A/B	Side C/D	*PG*	Corner dim.	Side A/B	Side C/D
12	17.25	30	11	7	17.25	30	11
16	25.30	12	6	9	21.85	20	6
20	27.60	12	4	11	25.30	12	4
25	37.95	5	2	13.5	27.60	12	4
32	48.30	3	1	16	31.05	10	2
40	60.95			21	37.95	5	2
50	69.00			29	48.30	3	1
63	74.75			36	60.95		
				42	69.00		
				48	74.75		

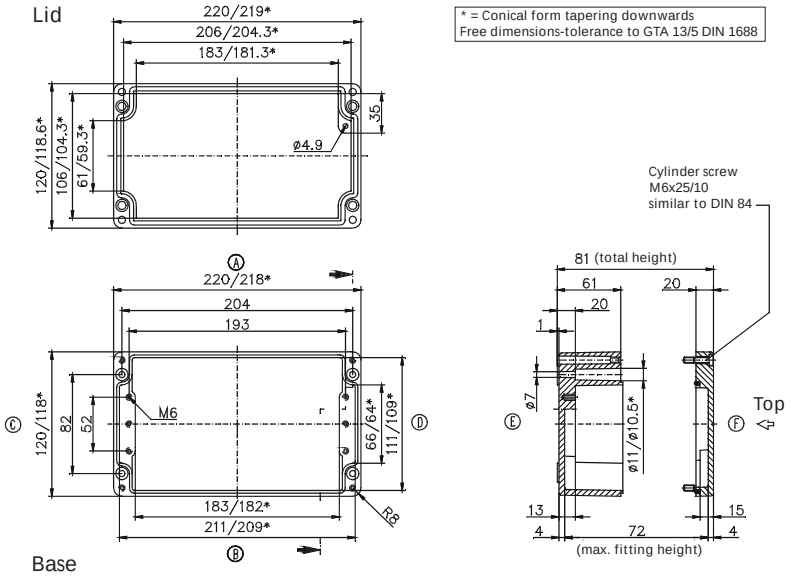

Type: ***01.12 22 09*** External dimensions: ***120 x 220 x 91 mm*** Weight: ***1800 g***

DIN rail length in mm	max. fitting length in mm	Earthing rail clamp	Mounting plate (thickness in mm)	External mounting brackets	External hinge* set	EMC version	Internal hinge* set	SWB / SBG / SBGL Corr.protection	Allen lid screws	Silicone lid seal	Sealable lid screws in steel	Turn bolt fastener on request	Quick lock
TS 35													
205	183	13	1.5	•	•	•		•	•	•	•		•

Maximum number of cable glands ***to DIN 50262****

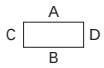

M	Corner dim.	Side A/B	Side C/D	*PG*	Corner dim.	Side A/B	Side C/D
12	17.25	34	11	7	17.25	34	11
16	25.30	15	6	9	21.85	24	6
20	27.60	14	4	11	25.30	15	4
25	37.95	6	2	13.5	27.60	14	4
32	48.30	4	1	16	31.05	11	2
40	60.95			21	37.95	6	2
50	69.00			29	48.30	4	1
63	74.75			36	60.95		
				42	69.00		
				48	74.75		

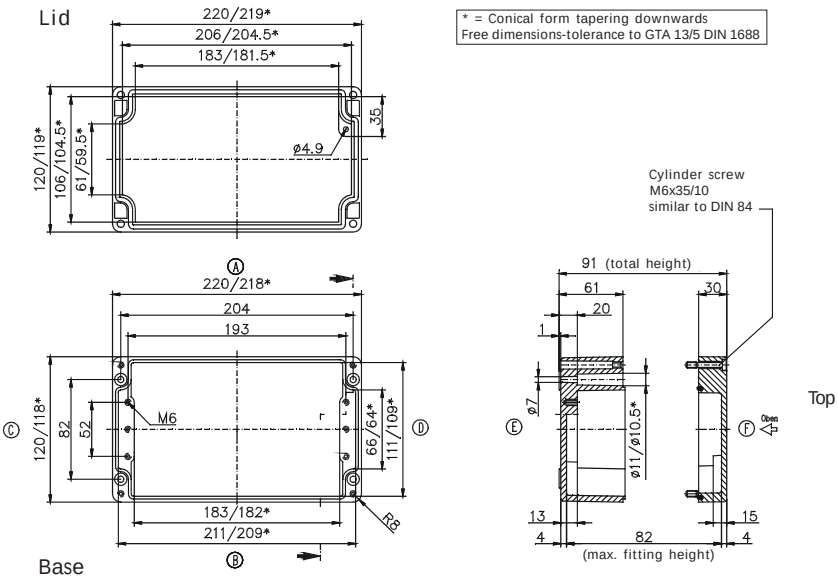

* Please quote mounting side

Type: ***01.12 22 12*** External dimensions: ***120 x 220 x 118 mm*** Weight: ***1410 g***

DIN rail length in mm	max. fitting length in mm	Earthing rail clamp	Mounting plate (thickness in mm)	External mounting brackets	External hinge* set	EMC version	Internal hinge* set	SWB / SBG / SBGL Corr.protection	Allen lid screws	Silicone lid seal	Sealable lid screws in steel	Turn bolt fastener on request	Quick lock
TS 35													
208	183	13	1.5	•	•	•		•	•	•	•		•

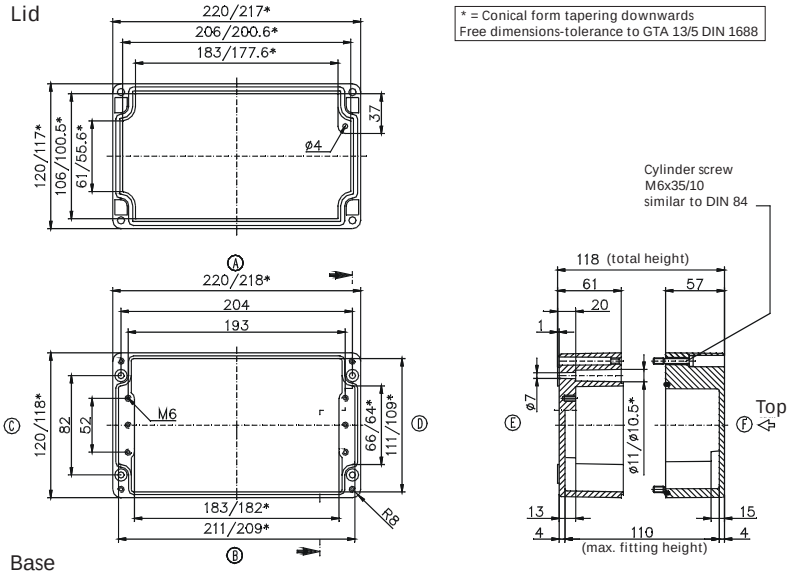

Maximum number of cable glands ***to DIN 50262****

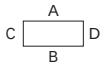

M	Corner dim.	Side A/B	Side C/D	*PG*	Corner dim.	Side A/B	Side C/D
12	17.25	34	11	7	17.25	34	11
16	25.30	15	6	9	21.85	24	6
20	27.60	14	4	11	25.30	15	4
25	37.95	6	2	13.5	27.60	14	4
32	48.30	4	1	16	31.05	11	2
40	60.95			21	37.95	6	2
50	69.00			29	48.30	4	1
63	74.75			36	60.95		
				42	69.00		
				48	74.75		

Type: ***01.12 36 08*** External dimensions: ***120 x 360 x 81 mm*** Weight: ***2100 g***

DIN rail length in mm	max. fitting length in mm	Earthing rail clamp	Mounting plate (thickness in mm)	External mounting brackets	External hinge* set	EMC version	Internal hinge* set	SWB / SBG / SBGL Corr.protection	Allen lid screws	Silicone lid seal	Sealable lid screws in steel	Turn bolt fastener on request	Quick lock
TS 35													
343	323	23	1.5	•	•	•		•	•	•	•		•

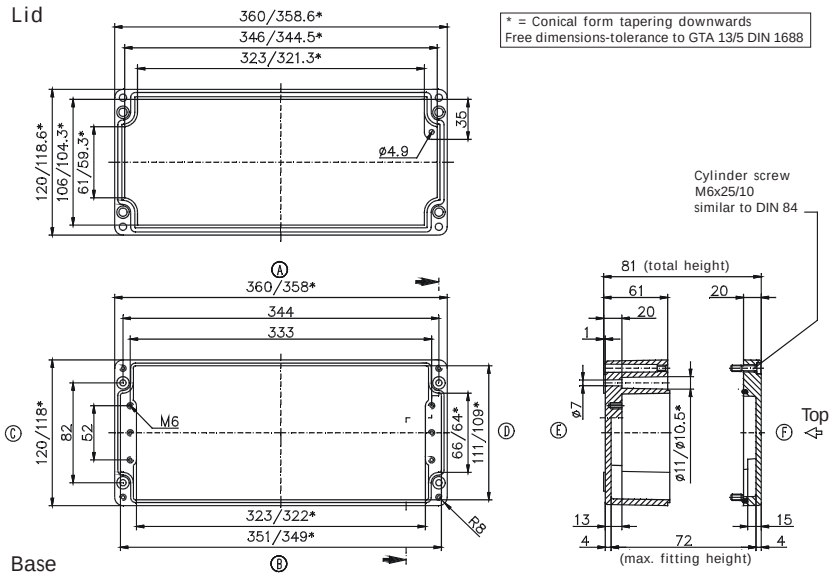

Maximum number of cable glands ***to DIN 50262****

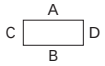

M	Corner dim.	Side A/B	Side C/D	*PG*	Corner dim.	Side A/B	Side C/D
12	17.25	58	11	7	17.25	58	11
16	25.30	26	5	9	21.85	41	6
20	27.60	24	4	11	25.30	26	4
25	37.95	10	2	13.5	27.60	24	3
32	48.30	7	1	16	31.05	20	2
40	60.95			21	37.95	10	2
50	69.00			29	48.30	7	1
63	74.75			36	60.95		
				42	69.00		
				48	74.75		

* Please quote mounting side

Type: **01.14 14 09** External dimensions: **140 x 140 x 91 mm** Weight: **1470 g**

DIN rail length in mm	max. fitting length in mm	Earthing rail clamp	Mounting plate (thickness in mm)	External mounting brackets	External hinge* set	EMC version	Internal hinge* set	SWB / SBG / SBGL Corr.protection	Allen lid screws	Silicone lid seal	Sealable lid screws in steel	Turn bolt fastener on request	Quick lock
TS 35													
126	100	6	1.5	•	•	•		•	•	•	•		•

Maximum number of cable glands ***to DIN 50262****

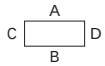

M	Corner dim.	Side A/B	Side C/D	PG	Corner dim.	Side A/B	Side C/D
12	17.25	18	12	7	17.25	18	12
16	25.30	8	6	9	21.85	12	6
20	27.60	8	4	11	25.30	8	5
25	37.95	3	2	13.5	27.60	8	4
32	48.30	2	1	16	31.05	6	3
40	60.95			21	37.95	3	2
50	69.00			29	48.30	2	1
63	74.75			36	60.95		
				42	69.00		
				48	74.75		

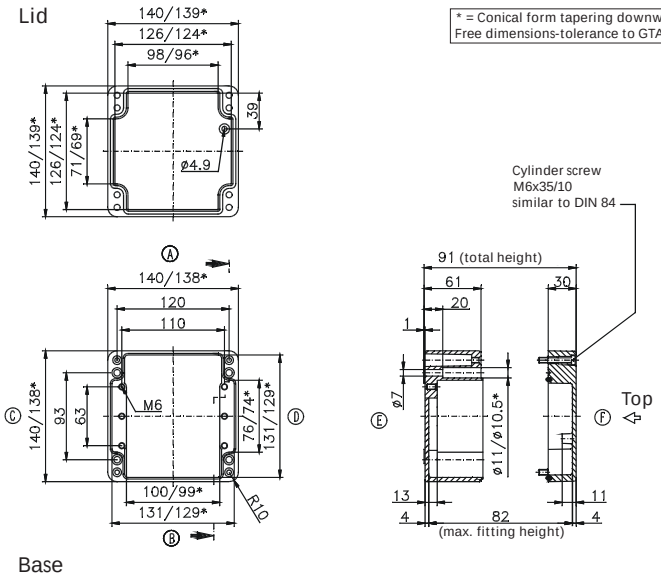

* = Conical form tapering downwards
Free dimensions-tolerance to GTA 13/5 DIN 1688

Type: **01.14 20 09** External dimensions: **140 x 200 x 91 mm** Weight: **1760 g**

DIN rail length in mm	max. fitting length in mm	Earthing rail clamp	Mounting plate (thickness in mm)	External mounting brackets	External hinge* set	EMC version	Internal hinge* set	SWB / SBG / SBGL Corr.protection	Allen lid screws	Silicone lid seal	Sealable lid screws in steel	Turn bolt fastener on request	Quick lock
TS 35													
186	160	12	1.5	•	•	•		•	•	•	•		•

Maximum number of cable glands ***to DIN 50262****

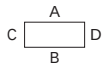

M	Corner dim.	Side A/B	Side C/D	PG	Corner dim.	Side A/B	Side C/D
12	17.25	28	12	7	17.25	28	12
16	25.30	12	6	9	21.85	20	6
20	27.60	12	4	11	25.30	12	6
25	37.95	5	2	13.5	27.60	12	4
32	48.30	3	1	16	31.05	10	3
40	60.95			21	37.95	5	2
50	69.00			29	48.30	3	1
63	74.75			36	60.95		
				42	69.00		
				48	74.75		

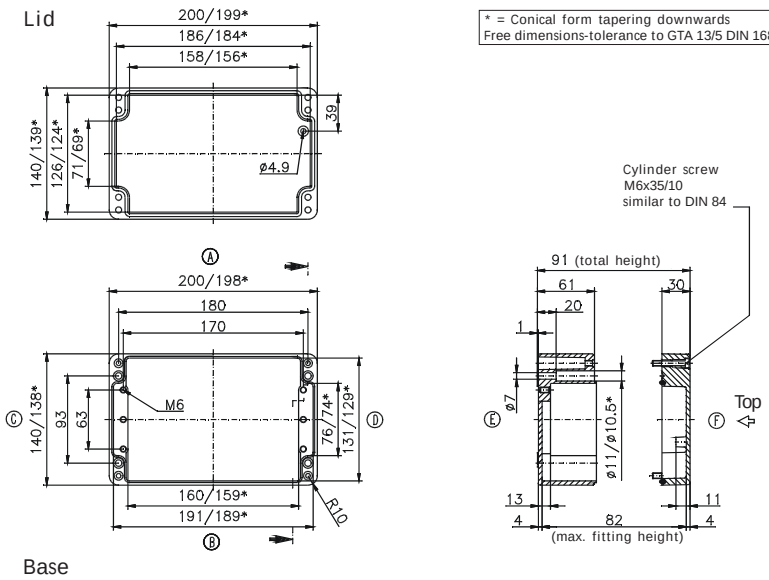

* = Conical form tapering downwards
Free dimensions-tolerance to GTA 13/5 DIN 1688

* Please quote mounting side

Type: ***01.16 16 09*** External dimensions: ***160 x 160 x 91 mm*** Weight: ***1760 g***

DIN rail length in mm	max. fitting length in mm	Earthing rail clamp	Mounting plate (thickness in mm)	External mounting brackets	External hinge* set	EMC version	Internal hinge* set	SWB / SBG / SBGL Corr.protection	Allen lid screws	Silicone lid seal	Sealable lid screws in steel	Turn bolt fastener on request	Quick lock
TS 35													
144	120	8	1.5	•	•	•	•	•	•	•	•	•	•

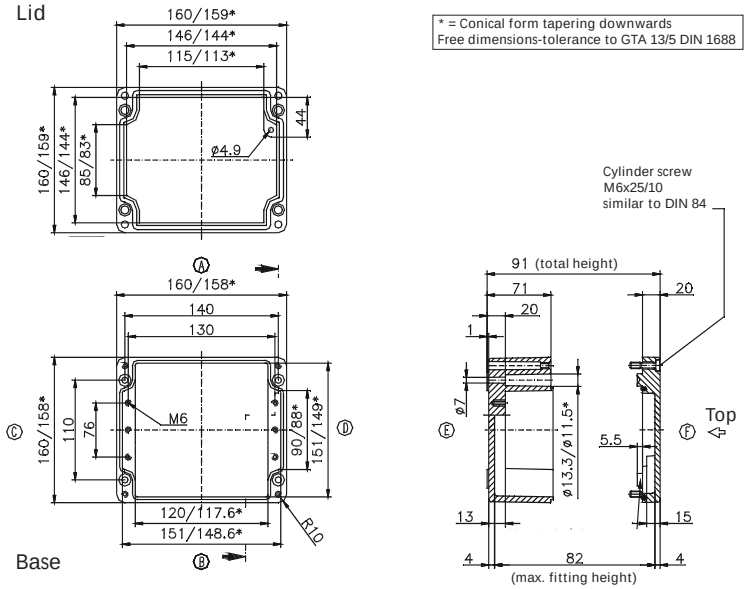

Maximum number of cable glands ***to DIN 50262****

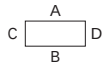

M	Corner dim.	Side A/B	Side C/D	*PG*	Corner dim.	Side A/B	Side C/D
12	17.25	26	16	7	17.25	26	16
16	25.30	12	8	9	21.85	15	11
20	27.60	9	6	11	25.30	12	6
25	37.95	5	3	13.5	27.60	9	6
32	48.30	3	2	16	31.05	8	5
40	60.95	2	1	21	37.95	5	3
50	69.00	2		29	48.30	2	2
63	74.75			36	60.95	2	1
				42	69.00	1	
				48	74.75		

Type: ***01.16 26 09*** External dimensions: ***160 x 260 x 91 mm*** Weight: ***2300 g***

DIN rail length in mm	max. fitting length in mm	Earthing rail clamp	Mounting plate (thickness in mm)	External mounting brackets	External hinge* set	EMC version	Internal hinge* set	SWB / SBG / SBGL Corr.protection	Allen lid screws	Silicone lid seal	Sealable lid screws in steel	Turn bolt fastener on request	Quick lock
TS 35													
245	220	16	1.5	•	•	•	•	•	•	•	•	•	•

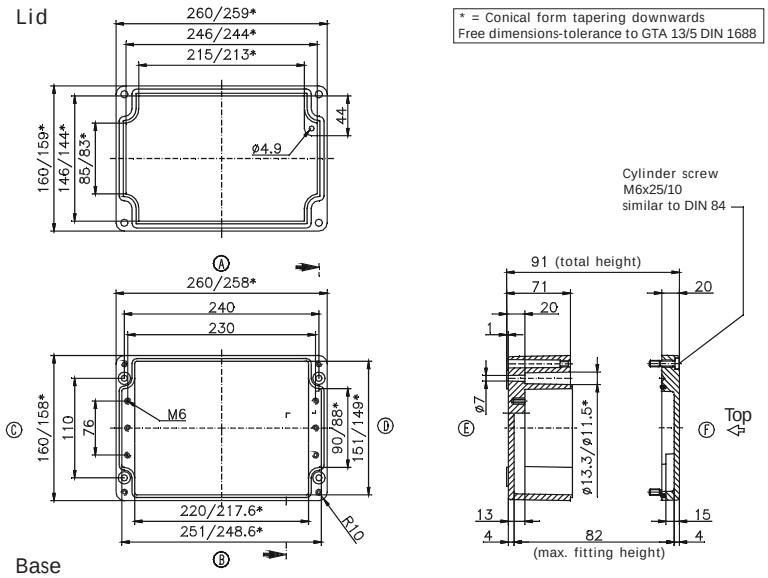

Maximum number of cable glands ***to DIN 50262****

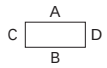

M	Corner dim.	Side A/B	Side C/D	*PG*	Corner dim.	Side A/B	Side C/D
12	17.25	50	16	7	17.25	50	16
16	25.30	24	8	9	21.85	30	11
20	27.60	17	6	11	25.30	23	6
25	37.95	10	3	13.5	27.60	17	6
32	48.30	5	2	16	31.05	14	5
40	60.95	3	1	21	37.95	9	3
50	69.00	3		29	48.30	5	2
63	74.75			36	60.95	3	1
				42	69.00	3	
				48	74.75		

* Please quote mounting side

Type: **01.16 36 09** External dimensions: ***160 x 360 x 91 mm*** Weight: ***2940 g***

DIN rail length in mm	max. fitting length in mm	Earthing rail clamp	Mounting plate (thickness in mm)	External mounting brackets	External hinge* set	EMC version	Internal hinge* set	SWB / SBG / SBGL Corr.protection	Allen lid screws	Silicone lid seal	Sealable lid screws in steel	Turn bolt fastener on request	Quick lock
TS 35													
343	320	23	1.5	•	•	•	•	•	•	•	•	•	•

Maximum number of cable glands ***to DIN 50262****

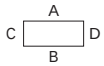

M	Corner dim.	Side A/B	Side C/D	PG	Corner dim.	Side A/B	Side C/D
12	17.25	72	16	7	17.25	72	16
16	25.30	36	8	9	21.85	42	11
20	27.60	24	6	11	25.30	33	6
25	37.95	15	3	13.5	27.60	24	6
32	48.30	7	2	16	31.05	20	5
40	60.95	5	1	21	37.95	14	3
50	69.00	4		29	48.30	7	2
63	74.75			36	60.95	5	1
				42	69.00	4	
				48	74.75		

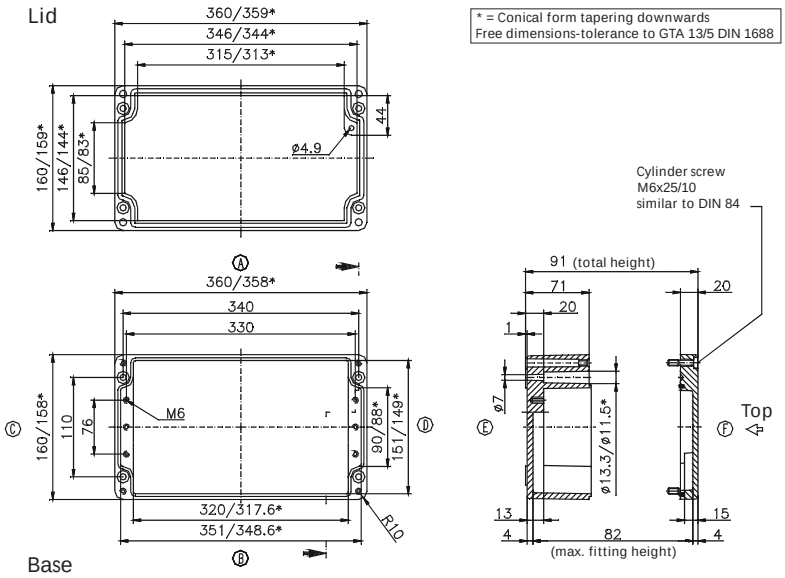

Type: **01.16 56 09** External dimensions: ***160 x 560 x 91 mm*** Weight: ***4457 g***

DIN rail length in mm	max. fitting length in mm	Earthing rail clamp	Mounting plate (thickness in mm)	External mounting brackets	External hinge* set	EMC version	Internal hinge* set	SWB / SBG / SBGL Corr.protection	Allen lid screws	Silicone lid seal	Sealable lid screws in steel	Turn bolt fastener on request	Quick lock
TS 35													
543	520	38	2	•	•	•	•	•	•	•	•	•	•

Maximum number of cable glands ***to DIN 50262****

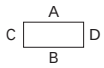

M	Corner dim.	Side A/B	Side C/D	PG	Corner dim.	Side A/B	Side C/D
12	17.25	104	16	7	17.25	104	16
16	25.30	58	8	9	21.85	66	11
20	27.60	40	62	11	25.30	58	6
25	37.95	24	3	13.5	27.60	40	6
32	48.30	12	2	16	31.05	32	5
40	60.95	8	1	21	37.95	24	3
50	69.00	6		29	48.30	12	2
63	74.75			36	60.95	8	1
				42	69.00	6	
				48	74.75		

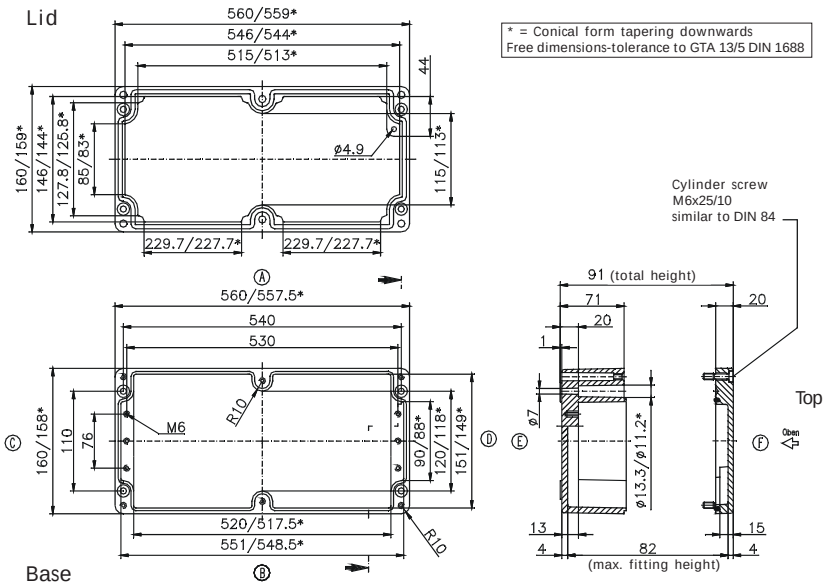

* Please quote mounting side

Type: ***01.18 18 10*** External dimensions: ***180 x 180 x 101 mm*** Weight: ***2400 g***

DIN rail length in mm	max. fitting length in mm	Earthing rail clamp	Mounting plate (thickness in mm)	External mounting brackets	External hinge* set	EMC version	Internal hinge* set	SWB / SBG / SBGL Corr.protection	Allen lid screws	Silicone lid seal	Sealable lid screws in steel	Turn bolt fastener on request	Quick lock
TS 35													
166	140	8	1.5	•	•	•	•	•	•	•	•	•	•

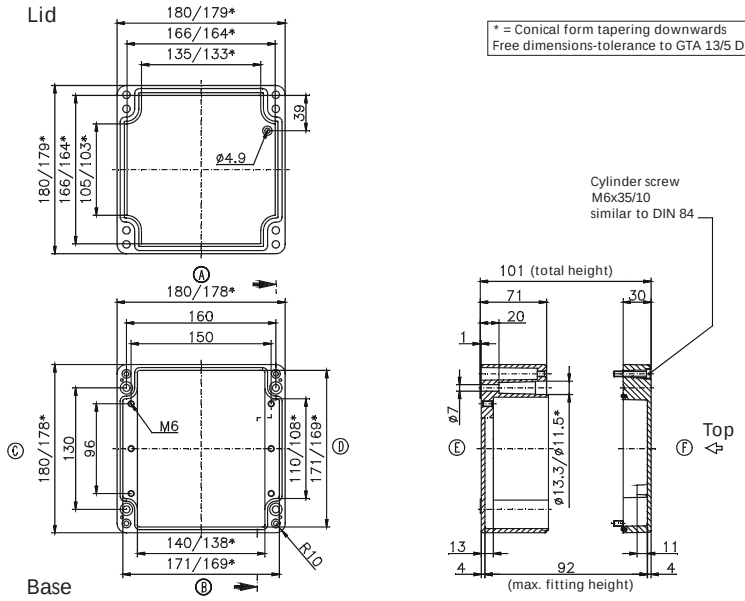

* = Conical form tapering downwards
Free dimensions-tolerance to GTA 13/5 DIN 1688

Maximum number of cable glands ***to DIN 50262****

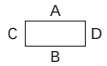

M	Corner dim.	Side A/B	Side C/D	***PG***	Corner dim.	Side A/B	Side C/D
12	17.25	30	20	7	17.25	28	20
16	25.30	15	9	9	21.85	18	14
20	27.60	11	8	11	25.30	15	8
25	37.95	6	3	13.5	27.60	11	8
32	48.30	3	2	16	31.05	8	6
40	60.95	2	2	21	37.95	6	3
50	69.00	2		29	48.30	3	2
63	74.75			36	60.95	2	2
				42	69.00	2	
				48	74.75		

Type: ***01.18 28 10*** External dimensions: ***180 x 280 x 101 mm*** Weight: ***3000 g***

DIN rail length in mm	max. fitting length in mm	Earthing rail clamp	Mounting plate (thickness in mm)	External mounting brackets	External hinge* set	EMC version	Internal hinge* set	SWB / SBG / SBGL Corr.protection	Allen lid screws	Silicone lid seal	Sealable lid screws in steel	Turn bolt fastener on request	Quick lock
TS 35													
264	240	16	1.5	•	•	•	•	•	•	•	•	•	•

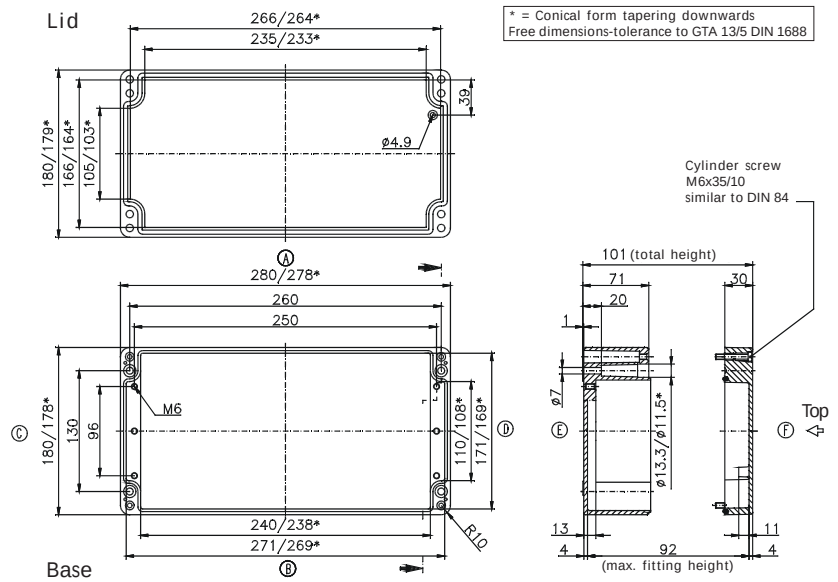

* = Conical form tapering downwards
Free dimensions-tolerance to GTA 13/5 DIN 1688

Maximum number of cable glands ***to DIN 50262****

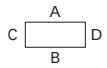

M	Corner dim.	Side A/B	Side C/D	***PG***	Corner dim.	Side A/B	Side C/D
12	17.25	52	22	7	17.25	52	22
16	25.30	26	10	9	21.85	33	15
20	27.60	18	8	11	25.30	23	10
25	37.95	11	4	13.5	27.60	18	8
32	48.30	5	2	16	31.05	14	7
40	60.95	4	2	21	37.95	10	4
50	69.00	3		29	48.30	5	2
63	74.75			36	60.95	4	2
				42	69.00	3	
				48	74.75		

* Please quote mounting side

Type: ***01.23 10 11*** External dimensions: ***230 x 100 x 111 mm*** Weight: ***2300 g***

DIN rail length in mm	max. fitting length in mm	Earthing rail clamp	Mounting plate (thickness in mm)	External mounting brackets	External hinge* set	EMC version	Internal hinge* set	SWB / SBG / SBGL Corr.protection	Allen lid screws	Silicone lid seal	Sealable lid screws in steel	Turn bolt fastener on request	Quick lock
TS 35													
214	190		1.5	•	•	•	•	•	•	•	•	•	•

Maximum number of cable glands ***to DIN 50262****

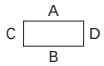

M	Corner dim.	Side A/B	Side C/D	*PG*	Corner dim.	Side A/B	Side C/D
12	17.25	15	45	7	17.25	15	45
16	25.30	8	18	9	21.85	10	28
20	27.60	6	17	11	25.30	6	18
25	37.95	3	8	13.5	27.60	6	17
32	48.30	2	5	16	31.05	5	12
40	60.95	1	3	21	37.95	3	8
50	69.00	1	2	29	48.30	1	4
63	74.75		2	36	60.95	1	3
				42	69.00	1	2
				48	74.75	1	2

Lid

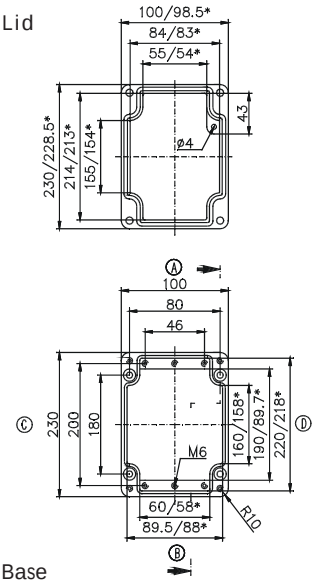

Base

* = Conical form tapering downwards
Free dimensions-tolerance to GTA 13/5 DIN 1688

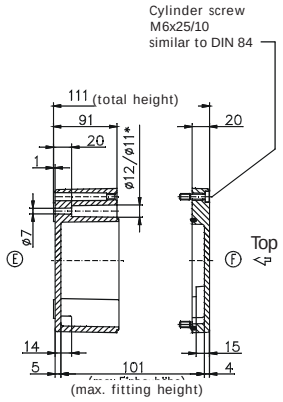

Type: ***01.23 20 11*** External dimensions: ***232 x 202 x 111 mm*** Weight: ***2880 g***

DIN rail length in mm	max. fitting length in mm	Earthing rail clamp	Mounting plate (thickness in mm)	External mounting brackets	External hinge* set	EMC version	Internal hinge* set	SWB / SBG / SBGL Corr.protection	Allen lid screws	Silicone lid seal	Sealable lid screws in steel	Turn bolt fastener on request	Quick lock
TS 35													
186	160	12	1.5	•	•	•	•	•	•	•	•	•	•

Maximum number of cable glands ***to DIN 50262****

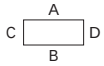

M	Cor-ner dim.	Side A/B	Side C/D	*PG*	Cor-ner dim.	Side A/B	Side C/D
12	17.25	45	45	7	17.25	45	45
16	25.30	22	18	9	21.85	28	28
20	27.60	18	17	11	25.30	20	18
25	37.95	8	8	13.5	27.60	18	17
32	48.30	6	5	16	31.05	15	12
40	60.95	3	3	21	37.95	8	8
50	69.00	2	2	29	48.30	5	4
63	74.75	2	2	36	60.95	3	3
				42	69.00	2	2
				48	74.75	2	2

Lid

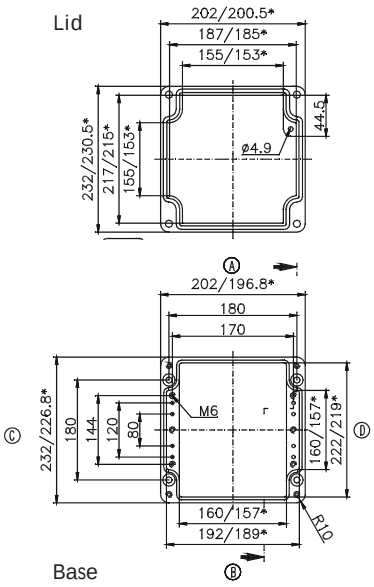

Base

* = Conical form tapering downwards
Free dimensions-tolerance to GTA 13/5 DIN 1688

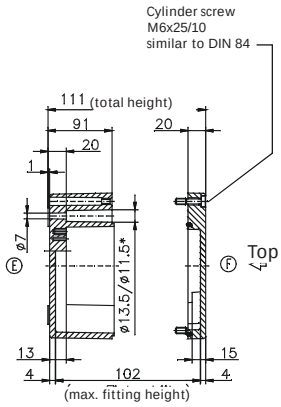

* Please quote mounting side

Type: ***01.23 20 18*** External dimensions: ***232 x 202 x 181 mm*** Weight: ***4600 g***

DIN rail length in mm	max. fitting length in mm	Earthing rail clamp	Mounting plate (thickness in mm)	External mounting brackets	External hinge* set	EMC version	Internal hinge* set	SWB / SBG / SBGL Corr.protection	Allen lid screws	Silicone lid seal	Sealable lid screws in steel	Turn bolt fastener on request	Quick lock
TS 35													
186	160	12	1.5	•	•	•	•	•	•	•	•	•	•

Maximum number of cable glands ***to DIN 50262****

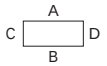

M	Corner dim.	Side A/B	Side C/D	PG	Corner dim.	Side A/B	Side C/D
12	17.25	90	81	7	17.25	90	81
16	25.30	42	36	9	21.85	56	49
20	27.60	33	33	11	25.30	42	36
25	37.95	18	16	13.5	27.60	33	33
32	48.30	10	9	16	31.05	25	25
40	60.95	6	6	21	37.95	16	16
50	69.00	5	5	29	48.30	10	9
63	74.75	4	4	36	60.95	6	5
				42	69.00	5	4
				48	74.75	4	4

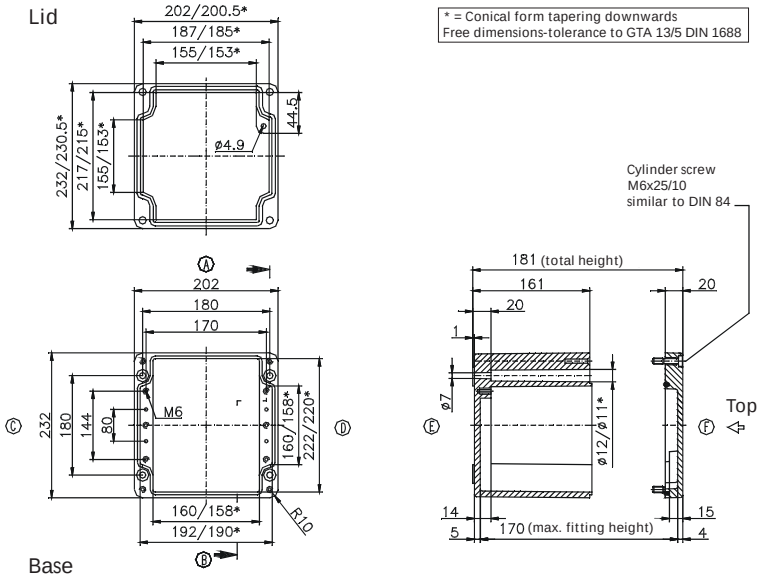

Type: ***01.23 28 11*** External dimensions: ***230 x 280 x 111 mm*** Weight: ***3460 g***

DIN rail length in mm	max. fitting length in mm	Earthing rail clamp	Mounting plate (thickness in mm)	External mounting brackets	External hinge* set	EMC version	Internal hinge* set	SWB / SBG / SBGL Corr.protection	Allen lid screws	Silicone lid seal	Sealable lid screws in steel	Turn bolt fastener on request	Quick lock
TS 35													
264	240	16	1.5	•	•	•	•	•	•	•	•	•	•

Maximum number of cable glands ***to DIN 50262****

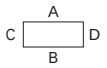

M	Corner dim.	Side A/B	Side C/D	PG	Corner dim.	Side A/B	Side C/D
12	17.25	70	45	7	17.25	68	45
16	25.30	32	18	9	21.85	44	28
20	27.60	24	17	11	25.30	32	18
25	37.95	12	8	13.5	27.60	24	17
32	48.30	9	5	16	31.05	21	12
40	60.95	4	3	21	37.95	12	8
50	69.00	3	2	29	48.30	9	4
63	74.75	3	2	36	60.95	4	3
				42	69.00	3	2
				48	74.75	3	2

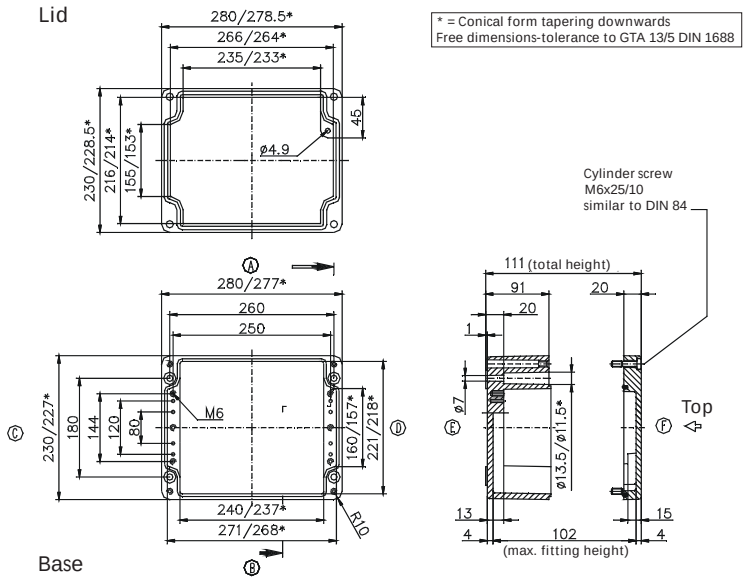

* Please quote mounting side

Type: ***01.23 33 11*** External dimensions: ***230 x 330 x 111 mm*** Weight: ***3500 g***

DIN rail length in mm	max. fitting length in mm	Earthing rail clamp	Mounting plate (thickness in mm)	External mounting brackets	External hinge* set	EMC version	Internal hinge* set	SWB / SBG / SBGL Corr.protection	Allen lid screws	Silicone lid seal	Sealable lid screws in steel	Turn bolt fastener on request	Quick lock
TS 35													
314	290	21	1.5	•	•	•	•	•	•	•	•	•	•

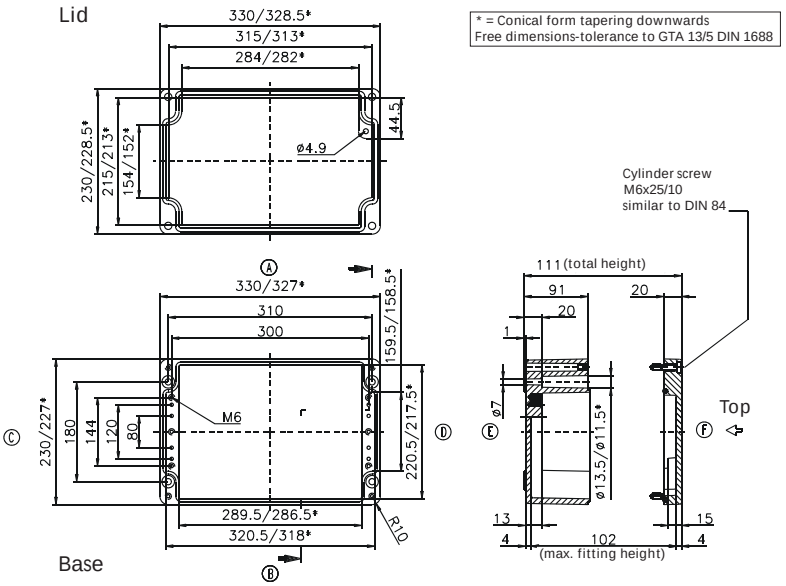

Maximum number of cable glands ***to DIN 50262****

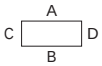

M	Corner dim.	Side A/B	Side C/D	PG	Corner dim.	Side A/B	Side C/D
12	17.25	84	45	7	17.25	81	45
16	25.30	42	18	9	21.85	52	28
20	27.60	30	17	11	25.30	38	18
25	37.95	15	8	13.5	27.60	30	17
32	48.30	11	5	16	31.05	27	12
40	60.95	5	3	21	37.95	15	8
50	69.00	4	2	29	48.30	11	4
63	74.75	4	2	36	60.95	5	3
				42	69.00	4	2
				48	74.75	4	2

Type: ***01.23 33 18*** External dimensions: ***230 x 330 x 181 mm*** Weight: ***6400 g***

DIN rail length in mm	max. fitting length in mm	Earthing rail clamp	Mounting plate (thickness in mm)	External mounting brackets	External hinge* set	EMC version	Internal hinge* set	SWB / SBG / SBGL Corr.protection	Allen lid screws	Silicone lid seal	Sealable lid screws in steel	Turn bolt fastener on request	Quick lock
TS 35													
314	290	21	1.5	•	•	•	•	•	•	•	•	•	•

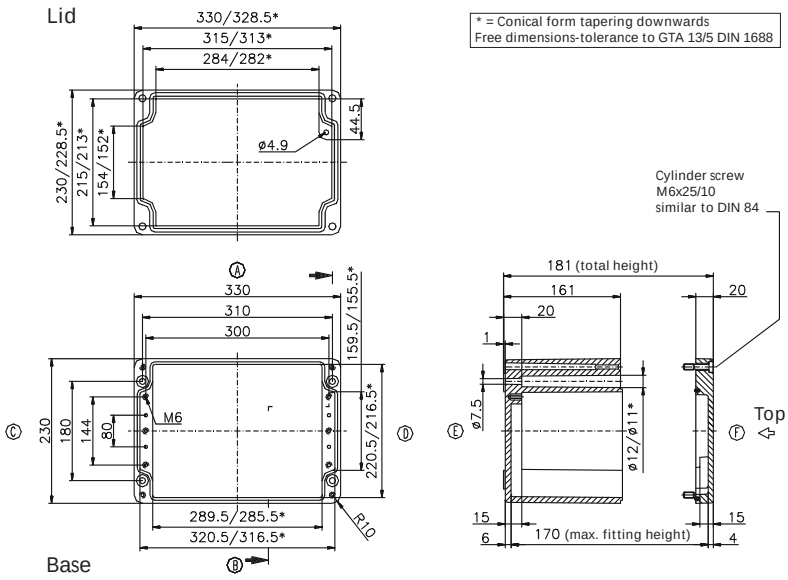

Maximum number of cable glands ***to DIN 50262****

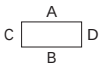

M	Corner dim.	Side A/B	Side C/D	PG	Corner dim.	Side A/B	Side C/D
12	17.25	165	81	7	17.25	144	81
16	25.30	77	36	9	21.85	104	49
20	27.60	60	33	11	25.30	77	36
25	37.95	30	16	13.5	27.60	60	33
32	48.30	18	9	16	31.05	45	25
40	60.95	11	6	21	37.95	30	16
50	69.00	8	5	29	48.30	18	9
63	74.75	8	4	36	60.95	11	5
				42	69.00	8	4
				48	74.75	8	4

* Please quote mounting side

Type: ***01.23 40 11*** External dimensions: ***230 x 400 x 111 mm*** Weight: ***4833 g***

DIN rail length in mm	max. fitting length in mm	Earthing rail clamp	Mounting plate (thickness in mm)	External mounting brackets	External hinge* set	EMC version	Internal hinge* set	SWB / SBG / SBGL Corr.protection	Allen lid screws	Silicone lid seal	Sealable lid screws in steel	Turn bolt fastener on request	Quick lock
TS 35													
381	360	26	2	•	•	•	•	•	•	•	•	•	•

Maximum number of cable glands ***to DIN 50262****

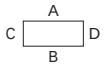

M	Corner dim.	Side A/B	Side C/D	*PG*	Corner dim.	Side A/B	Side C/D
12	17.25	103	45	7	17.25	103	45
16	25.30	50	18	9	21.85	64	28
20	27.60	39	17	11	25.30	46	18
25	37.95	20	8	13.5	27.60	39	17
32	48.30	14	5	16	31.05	33	12
40	60.95	6	3	21	37.95	18	8
50	69.00	5	2	29	48.30	13	4
63	74.75	5	2	36	60.95	6	3
				42	69.00	5	2
				48	74.75	5	2

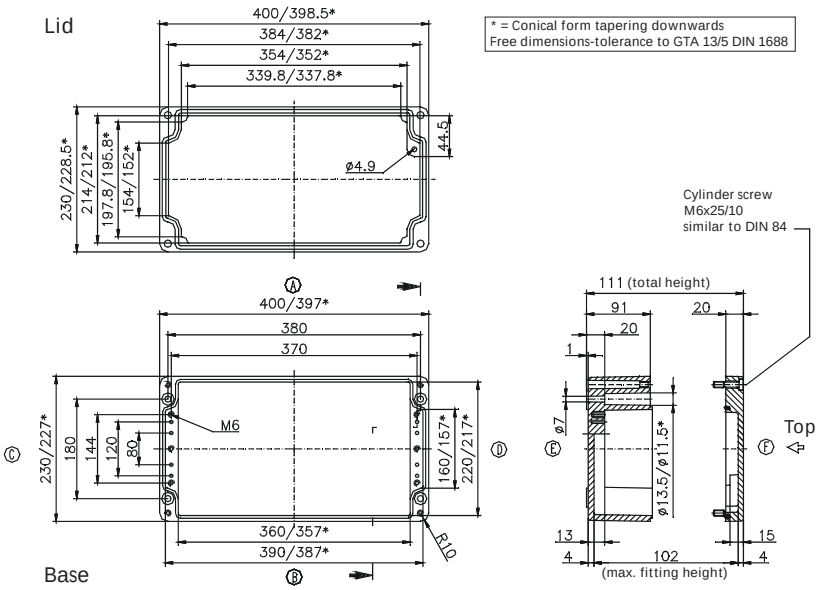

Type: ***01.23 40 23*** External dimensions: ***230 x 400 x 225 mm*** Weight: ***8300 g***

DIN rail length in mm	max. fitting length in mm	Earthing rail clamp	Mounting plate (thickness in mm)	External mounting brackets	External hinge* set	EMC version	Internal hinge* set	SWB / SBG / SBGL Corr.protection	Allen lid screws	Silicone lid seal	Sealable lid screws in steel	Turn bolt fastener on request	Quick lock
TS 35													
381	360	26	2	•	•	•	•	•	•	•	•	•	•

Maximum number of cable glands ***to DIN 50262****

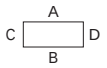

M	Corner dim.	Side A/B	Side C/D	*PG*	Corner dim.	Side A/B	Side C/D
12	17.25	240	108	7	17.25	240	108
16	25.30	122	48	9	21.85	160	63
20	27.60	100	44	11	25.30	112	48
25	37.95	54	21	13.5	27.60	100	44
32	48.30	30	13	16	31.05	77	35
40	60.95	18	9	21	37.95	54	21
50	69.00	15	6	29	48.30	30	13
63	74.75	12	5	36	60.95	18	6
				42	69.00	15	6
				48	74.75	12	5

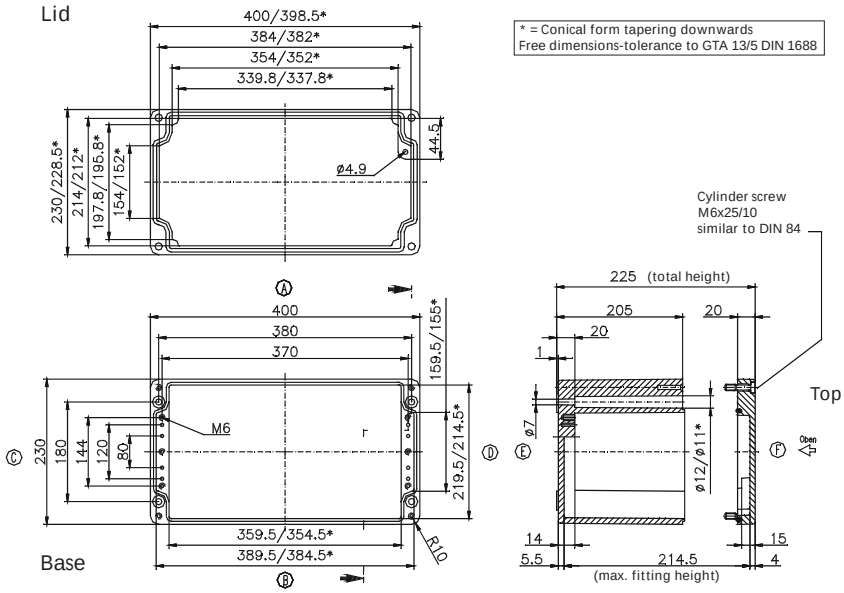

* Please quote mounting side

Type: ***01.23 60 11*** External dimensions: ***230 x 600 x 111 mm*** Weight: ***8700 g***

DIN rail length in mm	max. fitting length in mm	Earthing rail clamp	Mounting plate (thickness in mm)	External mounting brackets	External hinge* set	EMC version	Internal hinge* set	SWB / SBG / SBGL Corr.protection	Allen lid screws	Silicone lid seal	Sealable lid screws in steel	Turn bolt fastener on request	Quick lock
TS 35													
581	560	41	2	•	•	•	•	•	•	•	•	•	•

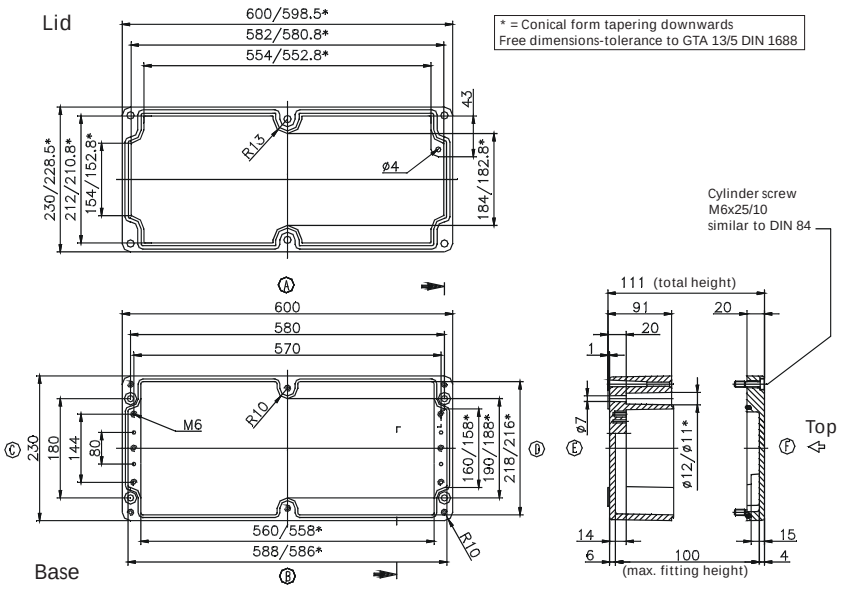

Maximum number of cable glands ***to DIN 50262****

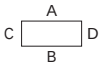

M	Corner dim.	Side A/B	Side C/D	***PG***	Corner dim.	Side A/B	Side C/D
12	17.25	150	43	7	17.25	150	43
16	25.30	72	18	9	21.85	96	28
20	27.60	54	17	11	25.30	68	18
25	37.95	28	8	13.5	27.60	54	15
32	48.30	20	4	16	31.05	28	12
40	60.95	10	3	21	37.95	28	8
50	69.00	8	2	29	48.30	20	4
63	74.75	6	2	36	60.95	10	2
				42	69.00	8	2
				48	74.75	6	2

Type: ***01.31 40 11*** External dimensions: ***313 x 404 x 111 mm*** Weight: ***6400 g***

DIN rail length in mm	max. fitting length in mm	Earthing rail clamp	Mounting plate (thickness in mm)	External mounting brackets	External hinge* set	EMC version	Internal hinge* set	SWB / SBG / SBGL Corr.protection	Allen lid screws	Silicone lid seal	Sealable lid screws in steel	Turn bolt fastener on request	Quick lock
TS 35													
381	360	26	2	•	•	•	•	•	•	•	•	•	•

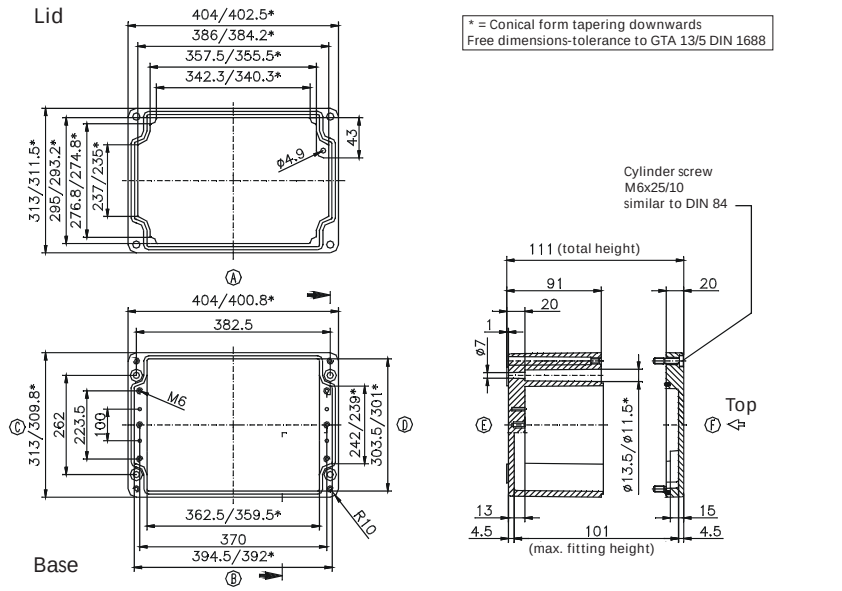

Maximum number of cable glands ***to DIN 50262****

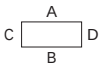

M	Corner dim.	Side A/B	Side C/D	***PG***	Corner dim.	Side A/B	Side C/D
12	17.25	105	68	7	17.25	103	68
16	25.30	50	28	9	21.85	64	42
20	27.60	39	26	11	25.30	46	27
25	37.95	20	12	13.5	27.60	39	24
32	48.30	14	7	16	31.05	33	18
40	60.95	6	4	21	37.95	18	12
50	69.00	5	3	29	48.30	13	7
63	74.75	5	3	36	60.95	6	4
				42	69.00	5	3
				48	74.75	5	3

* Please quote mounting side

Type: ***01.31 40 14*** External dimensions: ***312 x 403 x 141 mm*** Weight: ***9500 g***

DIN rail length in mm	max. fitting length in mm	Earthing rail clamp	Mounting plate (thickness in mm)	External mounting brackets	External hinge* set	EMC version	Internal hinge* set	SWB / SBG / SBGL Corr.protection	Allen lid screws	Silicone lid seal	Sealable lid screws in steel	Turn bolt fastener on request	Quick lock
TS 35													
381	360	26	2	•	•	•	•	•	•	•	•	•	•

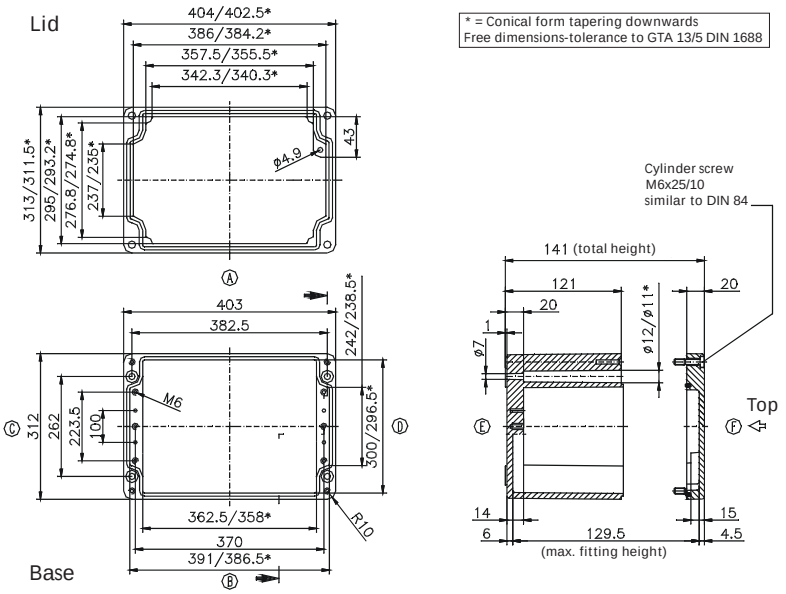

Maximum number of cable glands ***to DIN 50262****

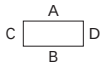

M	Corner dim.	Side A/B	Side C/D	***PG***	Corner dim.	Side A/B	Side C/D
12	17.25	147	95	7	17.25	147	95
16	25.30	70	43	9	21.85	96	55
20	27.60	55	32	11	25.30	70	40
25	37.95	28	18	13.5	27.60	55	32
32	48.30	17	10	16	31.05	44	28
40	60.95	12	7	21	37.95	27	18
50	69.00	7	4	29	48.30	17	10
63	74.75	6	3	36	60.95	12	7
				42	69,00	7	4
				48	74,75	6	3

Type: ***01.31 40 18*** External dimensions: ***313 x 404 x 181 mm*** Weight: ***9780 g***

DIN rail length in mm	max. fitting length in mm	Earthing rail clamp	Mounting plate (thickness in mm)	External mounting brackets	External hinge* set	EMC version	Internal hinge* set	SWB / SBG / SBGL Corr.protection	Allen lid screws	Silicone lid seal	Sealable lid screws in steel	Turn bolt fastener on request	Quick lock
TS 35													
381	360	26	2	•	•	•	•	•	•	•	•	•	•

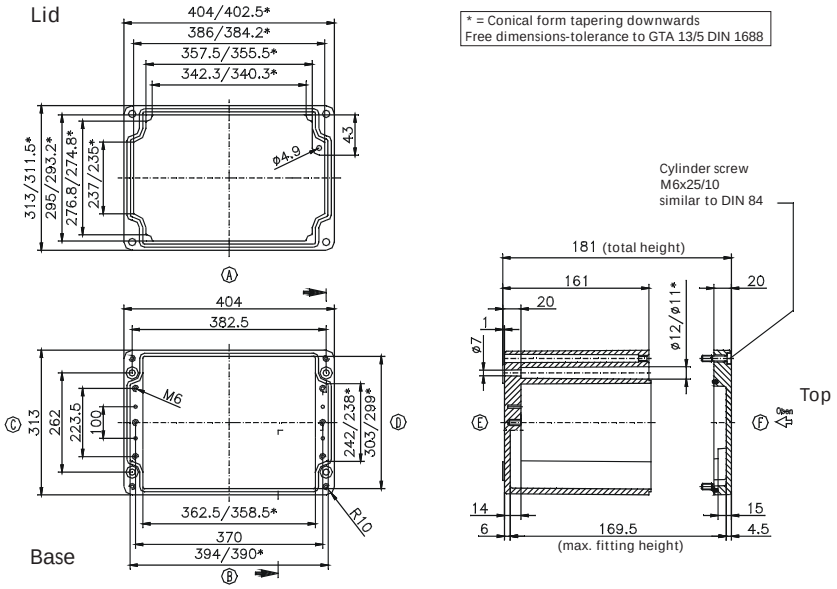

Maximum number of cable glands ***to DIN 50262****

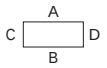

M	Corner dim.	Side A/B	Side C/D	***PG***	Corner dim.	Side A/B	Side C/D
12	17.25	205	122	7	17.25	205	122
16	25.30	98	54	9	21.85	128	77
20	27.60	78	51	11	25.30	98	54
25	37.95	40	24	13.5	27.60	75	48
32	48.30	22	15	16	31.05	60	38
40	60.95	15	9	21	37.95	38	24
50	69.00	11	6	29	48.30	22	15
63	74.75	8	6	36	60.95	14	8
				42	69.00	10	6
				48	74.75	10	6

* Please quote mounting side

Type: **01.31 40 23** External dimensions: ***313 x 404 x 227 mm*** Weight: ***11000 g***

DIN rail length in mm	max. fitting length in mm	Earthing rail clamp	Mounting plate (thickness in mm)	External mounting brackets	External hinge* set	EMC version	Internal hinge* set	SWB / SBG / SBGL Corr.protection	Allen lid screws	Silicone lid seal	Sealable lid screws in steel	Turn bolt fastener on request	Quick lock
TS 35													
381	360	26	2	•	•	•	•	•	•	•	•	•	•

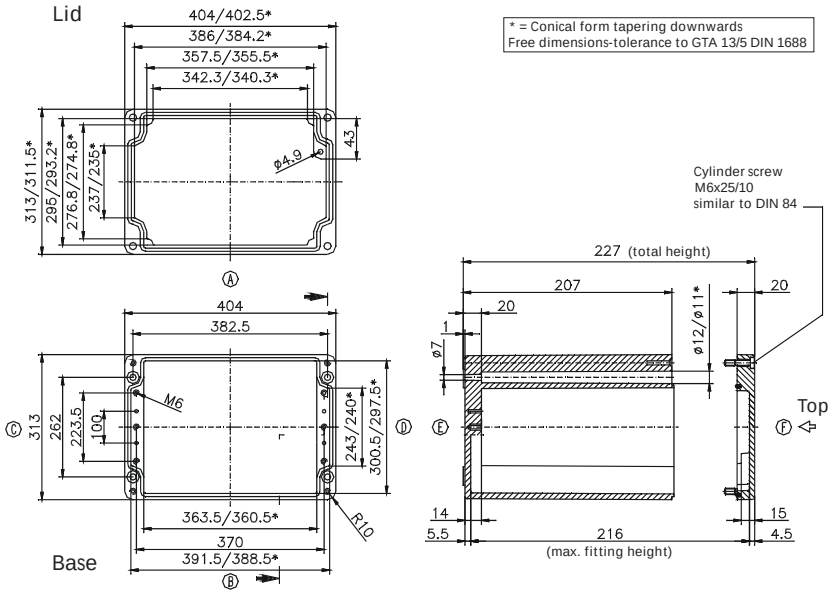

Maximum number of cable glands ***to DIN 50262****

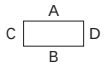

M	Corner dim.	Side A/B	Side C/D	PG	Corner dim.	Side A/B	Side C/D
12	17.25	246	162	7	17.25	246	162
16	25.30	126	72	9	21.85	160	99
20	27.60	100	68	11	25.30	112	72
25	37.95	54	33	13.5	27.60	100	64
32	48.30	30	20	16	31.05	77	53
40	60.95	18	12	21	37.95	54	33
50	69.00	15	9	29	48.30	30	20
63	74.75	12	8	36	60.95	18	12
				42	69.00	15	9
				48	74.75	14	8

Type: **01.31 60 11** External dimensions: ***310 x 600 x 111 mm*** Weight: ***10160 g***

DIN rail length in mm	max. fitting length in mm	Earthing rail clamp	Mounting plate (thickness in mm)	External mounting brackets	External hinge* set	EMC version	Internal hinge* set	SWB / SBG / SBGL Corr.protection	Allen lid screws	Silicone lid seal	Sealable lid screws in steel	Turn bolt fastener on request	Quick lock
TS 35													
581	560	41	2	•	•	•	•	•	•	•	•	•	•

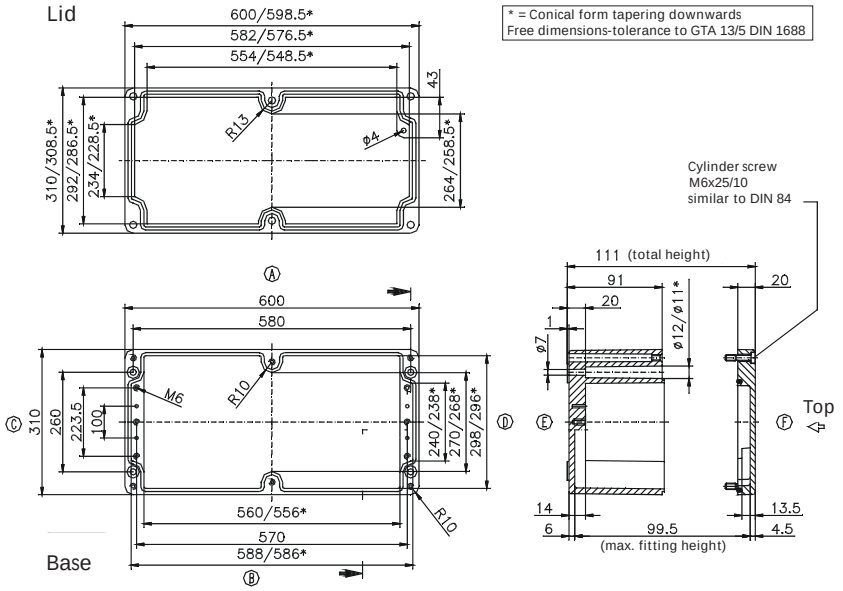

Maximum number of cable glands ***to DIN 50262****

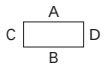

M	Corner dim.	Side A/B	Side C/D	PG	Corner dim.	Side A/B	Side C/D
12	17.25	150	68	7	17.25	150	68
16	25.30	76	28	9	21.85	96	42
20	27.60	60	24	11	25.30	72	27
25	37.95	30	12	13.5	27.60	60	24
32	48.30	20	7	16	31.05	48	18
40	60.95	10	4	21	37.95	28	12
50	69.00	8	3	29	48.30	20	6
63	74.75	6	3	36	60.95	10	4
				42	69.00	8	3
				48	74.75	6	3

* Please quote mounting side

Type: ***01.31 60 18*** External dimensions: ***310 x 600 x 181 mm*** Weight: ***12560 g***

DIN rail length in mm	max. fitting length in mm	Earthing rail clamp	Mounting plate (thickness in mm)	External mounting brackets	External hinge* set	EMC version	Internal hinge* set	SWB / SBG / SBGL Corr.protection	Allen lid screws	Silicone lid seal	Sealable lid screws in steel	Turn bolt fastener on request	Quick lock
TS 35													
581	560	41	2	•	•	•	•	•	•	•	•	•	•

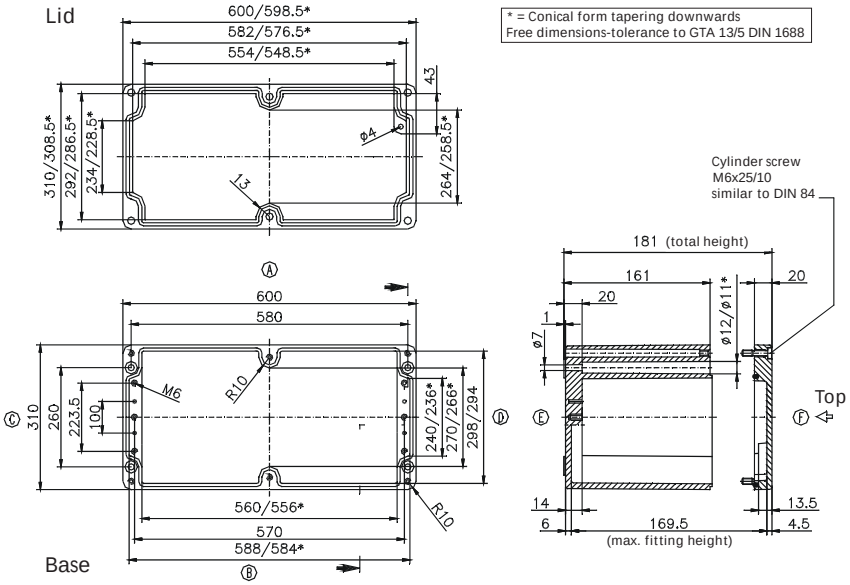

Maximum number of cable glands ***to DIN 50262****

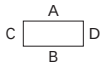

M	Corner dim.	Side A/B	Side C/D	***PG***	Corner dim.	Side A/B	Side C/D
12	17.25	150	68	7	17.25	150	68
16	25.30	76	28	9	21.85	96	42
20	27.60	60	24	11	25.30	72	27
25	37.95	30	12	13.5	27.60	60	24
32	48.30	20	7	16	31.05	48	18
40	60.95	10	4	21	37.95	28	12
50	69.00	8	3	29	48.30	20	6
63	74.75	6	3	36	60.95	10	4
				42	69.00	8	3
				48	74.75	6	3

* Please quote mounting side

Type: ***01.60 60 20*** External dimensions: ***600 x 600 x 202 mm*** Weight: ***26200 g***

DIN rail length in mm	max. fitting length in mm	Earthing rail clamp	Mounting plate (thickness in mm)	External mounting brackets	External hinge* set	EMC version	Internal hinge* set	SWB / SBG / SBGL Corr.protection	Allen lid screws	Silicone lid seal	Sealable lid screws in steel	Turn bolt fastener on request	Quick lock
TS 35													
575	552		2.5		•			•		•			

Maximum number of cable glands to ***DIN 50262****

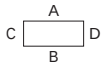

M	Corner dim.	Side A/B	Side C/D	***PG***	Corner dim.	Side A/B	Side C/D
12	17.25	270	270	7	17.25	270	270
16	25.30	140	140	9	21.85	184	184
20	27.60	108	108	11	25.30	134	134
25	37.95	56	56	13.5	27.60	108	108
32	48.30	32	32	16	31.05	84	84
40	60.95	22	22	21	37.95	56	56
50	69.00	16	16	29	48.30	32	32
63	74.75	12	12	36	60.95	18	18
				42	69.00	12	12
				48	74.75	12	12

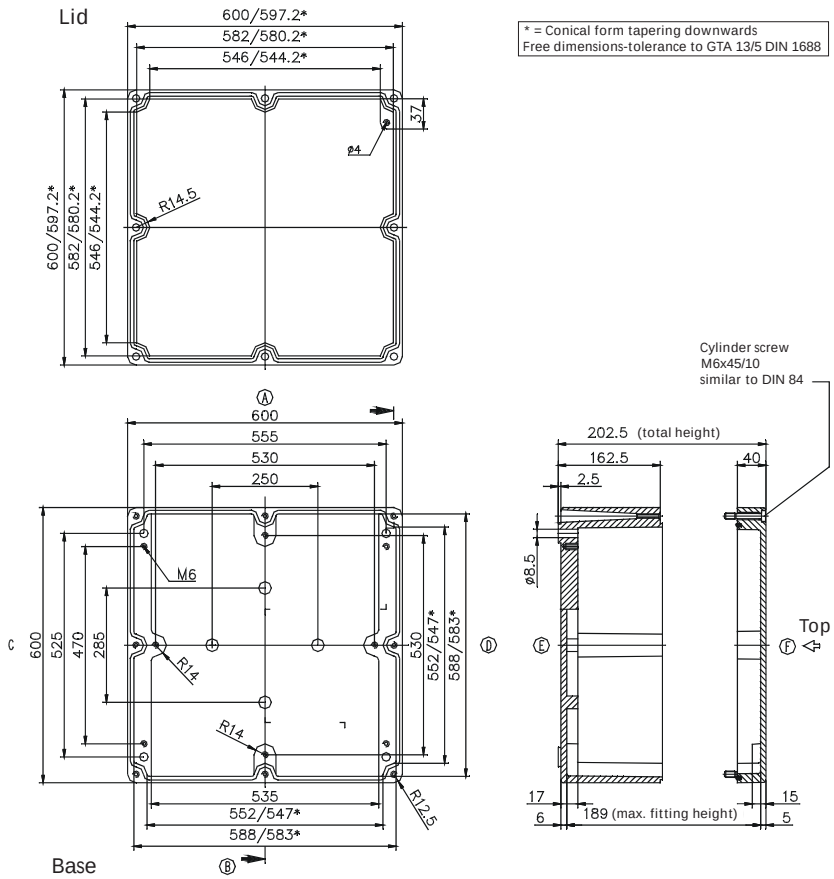

* Please quote mounting side

OCEAN CHIPS
Океан Электроники
Поставка электронных компонентов

Компания «Океан Электроники» предлагает заключение долгосрочных отношений при поставках импортных электронных компонентов на взаимовыгодных условиях!

Наши преимущества:

- Поставка оригинальных импортных электронных компонентов напрямую с производств Америки, Европы и Азии, а так же с крупнейших складов мира;
- Широкая линейка поставок активных и пассивных импортных электронных компонентов (более 30 млн. наименований);
- Поставка сложных, дефицитных, либо снятых с производства позиций;
- Оперативные сроки поставки под заказ (от 5 рабочих дней);
- Экспресс доставка в любую точку России;
- Помощь Конструкторского Отдела и консультации квалифицированных инженеров;
- Техническая поддержка проекта, помощь в подборе аналогов, поставка прототипов;
- Поставка электронных компонентов под контролем ВП;
- Система менеджмента качества сертифицирована по Международному стандарту ISO 9001;
- При необходимости вся продукция военного и аэрокосмического назначения проходит испытания и сертификацию в лаборатории (по согласованию с заказчиком);
- Поставка специализированных компонентов военного и аэрокосмического уровня качества (Xilinx, Altera, Analog Devices, Intersil, Interpoint, Microsemi, Actel, Aeroflex, Peregrine, VPT, Syfer, Eurofarad, Texas Instruments, MS Kennedy, Miteq, Cobham, E2V, MA-COM, Hittite, Mini-Circuits, General Dynamics и др.);

Компания «Океан Электроники» является официальным дистрибьютором и эксклюзивным представителем в России одного из крупнейших производителей разъемов военного и аэрокосмического назначения **«JONHON»**, а так же официальным дистрибьютором и эксклюзивным представителем в России производителя высокотехнологичных и надежных решений для передачи СВЧ сигналов **«FORSTAR»**.

AVIC JONHON

«JONHON» (основан в 1970 г.)

Разъемы специального, военного и аэрокосмического назначения:

(Применяются в военной, авиационной, аэрокосмической, морской, железнодорожной, горно- и нефтедобывающей отраслях промышленности)

«FORSTAR» (основан в 1998 г.)

ВЧ соединители, коаксиальные кабели, кабельные сборки и микроволновые компоненты:

(Применяются в телекоммуникациях гражданского и специального назначения, в средствах связи, РЛС, а так же военной, авиационной и аэрокосмической отраслях промышленности).

FORSTAR®

Телефон: 8 (812) 309-75-97 (многоканальный)
Факс: 8 (812) 320-03-32
Электронная почта: ocean@oceanchips.ru
Web: http://oceanchips.ru/
Адрес: 198099, г. Санкт-Петербург, ул. Калинина, д. 2, корп. 4, лит. А