TDK

February 2015

Inductors for Power Circuits

Wound Ferrite

VLS-EX Series

VLS6045EX Type

VLS6045EX

REMINDERS FOR USING THESE PRODUCTS

Before using these products, be sure to request the delivery specifications.

SAFETY REMINDERS

Please pay sufficient attention to the warnings for safe designing when using these products.

⚠ REMINDERS

- The storage period is less than 6 months. Be sure to follow the storage conditions (Temperature: 5 to 30°C, Humidity: 0 to 75% RH or less).
  If the storage period elapses, the soldering of the terminal electrodes may deteriorate.
- Do not use or store in locations where there are conditions such as gas corrosion (salt, acid, alkali, etc.).
- Before soldering, be sure to preheat components.
  The preheating temperature should be set so that the temperature difference between the solder temperature and chip temperature does not exceed 150°C.
- Soldering corrections after mounting should be within the range of the conditions determined in the specifications.
  If overheated, a short circuit, performance deterioration, or lifespan shortening may occur.
- When embedding a printed circuit board where a chip is mounted to a set, be sure that residual stress is not given to the chip due to the overall distortion of the printed circuit board and partial distortion such as at screw tightening portions.
- Self heating (temperature increase) occurs when the power is turned ON, so the tolerance should be sufficient for the set thermal design.
- Carefully lay out the coil for the circuit board design of the non-magnetic shield type.
  A malfunction may occur due to magnetic interference.
- Use a wrist band to discharge static electricity in your body through the grounding wire.
- Do not expose the products to magnets or magnetic fields.
- Do not use for a purpose outside of the contents regulated in the delivery specifications.
- The products listed on this catalog are intended for use in general electronic equipment (AV equipment, telecommunications equipment, home appliances, amusement equipment, computer equipment, personal equipment, office equipment, measurement equipment, industrial robots) under a normal operation and use condition.
  The products are not designed or warranted to meet the requirements of the applications listed below, whose performance and/or quality require a more stringent level of safety or reliability, or whose failure, malfunction or trouble could cause serious damage to society, person or property.
  If you intend to use the products in the applications listed below or if you have special requirements exceeding the range or conditions set forth in the each catalog, please contact us.

(1) Aerospace/Aviation equipment
(2) Transportation equipment (cars, electric trains, ships, etc.)
(3) Medical equipment
(4) Power-generation control equipment
(5) Atomic energy-related equipment
(6) Seabed equipment
(7) Transportation control equipment
(8) Public information-processing equipment
(9) Military equipment
(10) Electric heating apparatus, burning equipment
(11) Disaster prevention/crime prevention equipment
(12) Safety equipment
(13) Other applications that are not considered general-purpose applications

When designing your equipment even for general-purpose applications, you are kindly requested to take into consideration securing protection circuit/device or providing backup circuits in your equipment.

Inductors for Power Circuits

Wound Ferrite

Product compatible with RoHS directive
Halogen-free
Compatible with lead-free solders

Overview of VLS6045EX Type

FEATURES

- A magnetic shield type wound inductor for power circuits.
- High magnetic shield construction achieved by a ferrite magnetic material and compatible with high-density mounting.
- Larger current and lower Rdc have been achieved by optimizing the ferrite core figure.

APPLICATION

TVs, STBs, game devices, and other audiovisual equipment

PART NUMBER CONSTRUCTION

VLS 6045 EX - R47 N

Series name	L×W×H Dimensions (mm)		Internal code	Inductance (μH)		Inductance tolerance	
	6045	6.0×6.0×4.5		R47	0.47	M	±20%
				2R2	2.2	N	±30%
				100	10		

OPERATING TEMPERATURE RANGE, PACKAGE QUANTITY, PRODUCT WEIGHT

Type	Temperature range		Package quantity	Individual weight
	Operating temperature* (°C)	Storage temperature** (°C)	(pieces/reel)	(g)
VLS6045EX	-40 to 105	-40 to 105	1500	0.6

* Operating temperature range includes self-temperature rise.
** The Storage temperature range is for after the circuit board is mounted.

- RoHS Directive Compliant Product: See the following for more details related to RoHS Directive compliant products. http://product.tdk.com/en/environment/rohs/
- Halogen-free: Indicates that Cl content is less than 900ppm, Br content is less than 900ppm, and that the total Cl and Br content is less than 1500ppm.

⚠ Please be sure to request delivery specifications that provide further details on the features and specifications of the products for proper and safe use.
Please note that the contents may change without any prior notice due to reasons such as upgrading.

VLS6045EX Type

RECOMMENDED REFLOW PROFILE

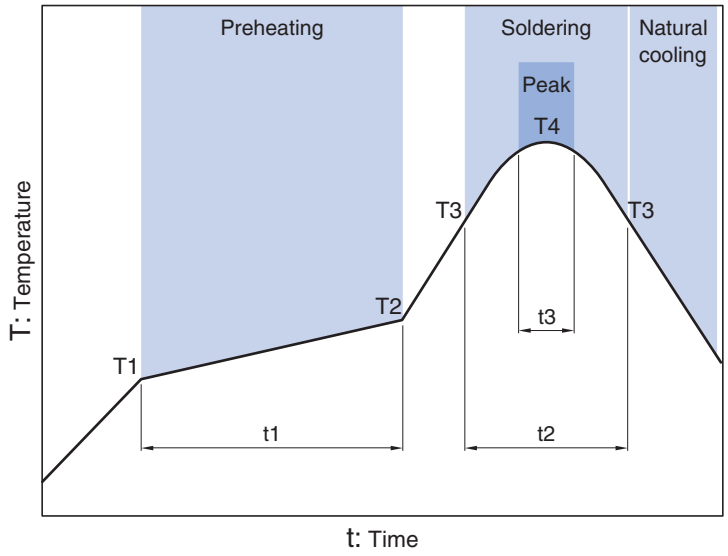

Preheating			Soldering		Peak	
Temp.		Time	Temp.	Time	Temp.	Time
T1	T2	t1	T3	t2	T4	t3
150°C	180°C	60 to 120s	220°C	40s	260°C	5s

⚠ Please be sure to request delivery specifications that provide further details on the features and specifications of the products for proper and safe use.
Please note that the contents may change without any prior notice due to reasons such as upgrading.

VLS6045EX Type

SHAPE & DIMENSIONS

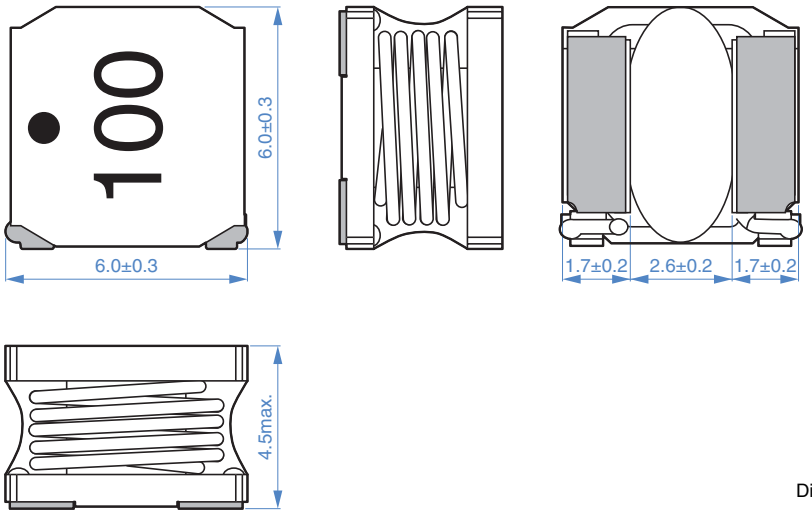

Dimensions in mm

RECOMMENDED LAND PATTERN

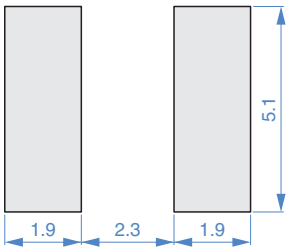

Dimensions in mm

⚠ Please be sure to request delivery specifications that provide further details on the features and specifications of the products for proper and safe use.
Please note that the contents may change without any prior notice due to reasons such as upgrading.

VLS6045EX Type

■ELECTRICAL CHARACTERISTICS

□CHARACTERISTICS SPECIFICATION TABLE

L (μH)	Tolerance	Measuring frequency (kHz)	DC resistance (Ω)±30%	Rated current* Idc1 (A)max.	Idc2 (A)typ.	Part No.
0.47	±30%	100	0.010	13.5	7.0	VLS6045EX-R47N
1.0	±30%	100	0.012	12.0	6.0	VLS6045EX-1R0N
1.5	±30%	100	0.017	8.2	5.3	VLS6045EX-1R5N
2.2	±30%	100	0.019	7.5	5.1	VLS6045EX-2R2N
3.3	±30%	100	0.023	6.5	4.95	VLS6045EX-3R3N
4.7	±20%	100	0.027	5.8	4.2	VLS6045EX-4R7M
6.8	±20%	100	0.036	4.7	3.6	VLS6045EX-6R8M
10	±20%	100	0.047	3.9	3.4	VLS6045EX-100M
15	±20%	100	0.075	3.1	2.5	VLS6045EX-150M
22	±20%	100	0.105	2.4	1.9	VLS6045EX-220M
33	±20%	100	0.175	1.9	1.5	VLS6045EX-330M

* Rated current: smaller value of either Idc1 or Idc2.
Idc1: When based on the inductance change rate (30% below the initial L value)
Idc2: When based on the temperature increase (Temperature increase of 40°C by self heating)

○ Measurement equipment

Measurement item	Product No.	Manufacturer
L	4194A	Keysight Technologies, Inc. (formerly Hewlett-Packard)
DC resistance	VP-2941A	Panasonic (formerly Matsushita Electric Industrial)
Rated current Idc1	4284A+42841A+42842A	Keysight Technologies, Inc. (formerly Hewlett-Packard)

＊ Equivalent measurement equipment may be used.

⚠ Please be sure to request delivery specifications that provide further details on the features and specifications of the products for proper and safe use.
Please note that the contents may change without any prior notice due to reasons such as upgrading.

VLS6045EX Type

■ELECTRICAL CHARACTERISTICS

□L FREQUENCY CHARACTERISTICS GRAPH

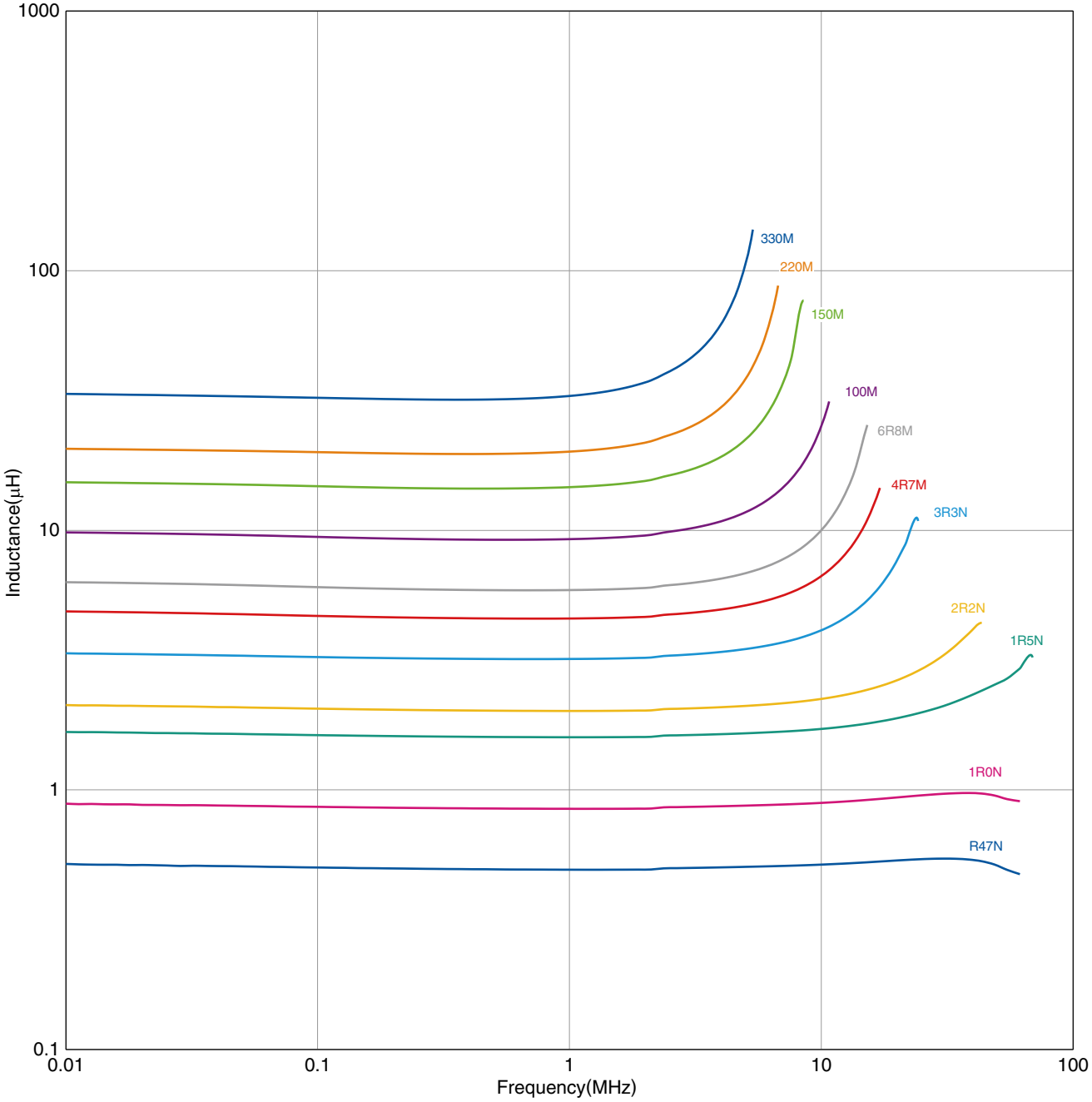

○ Measurement equipment

Product No.	Manufacturer
4294A	Keysight Technologies, Inc. (formerly Hewlett-Packard)

＊ Equivalent measurement equipment may be used.

⚠ Please be sure to request delivery specifications that provide further details on the features and specifications of the products for proper and safe use.
Please note that the contents may change without any prior notice due to reasons such as upgrading.

VLS6045EX Type

■ELECTRICAL CHARACTERISTICS

□INDUCTANCE VS. DC BIAS CHARACTERISTICS GRAPH

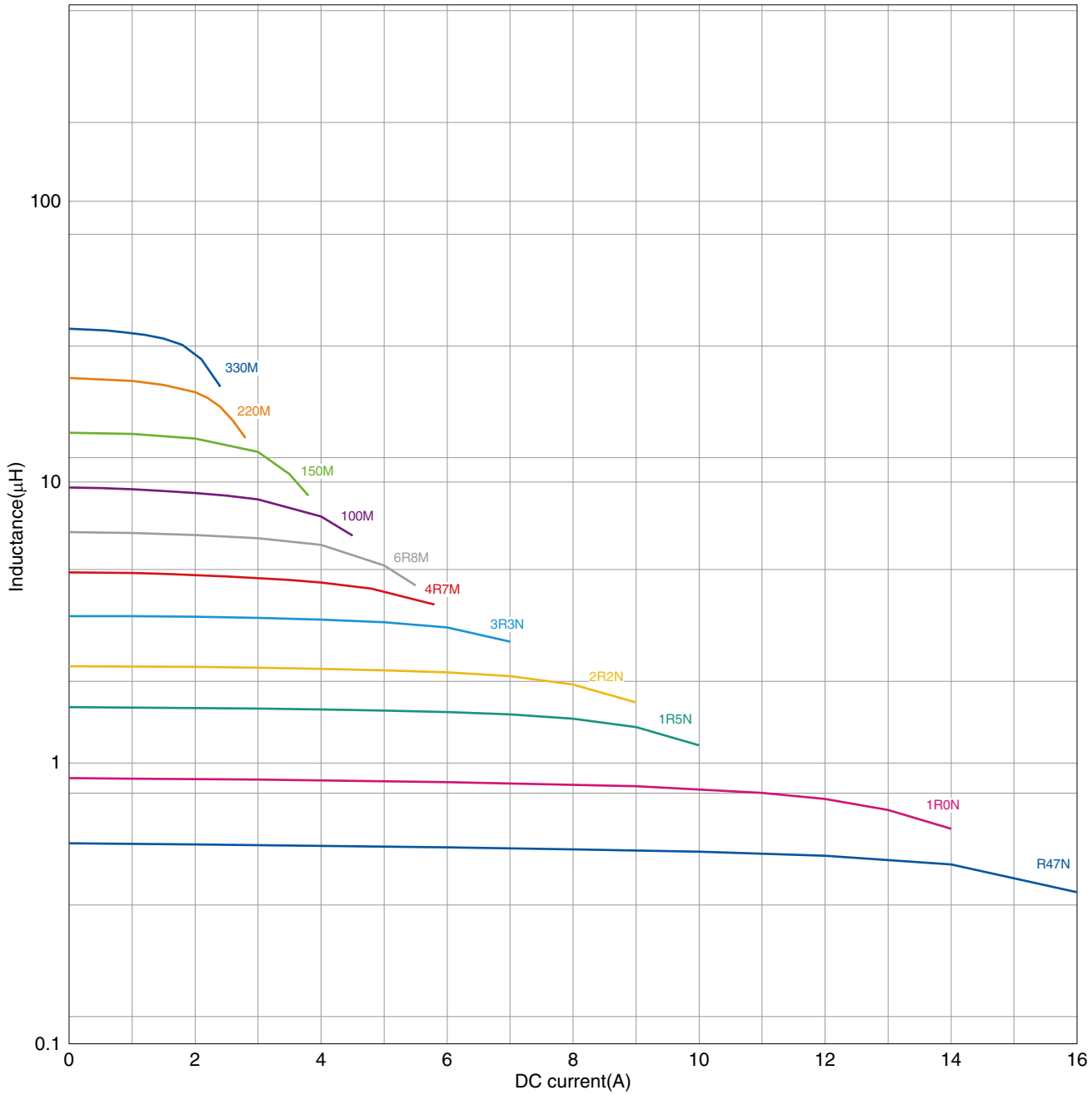

○ Measurement equipment

Product No.	Manufacturer
4284A+42841A+42842A	Keysight Technologies, Inc. (formerly Hewlett-Packard)

＊ Equivalent measurement equipment may be used.

⚠ Please be sure to request delivery specifications that provide further details on the features and specifications of the products for proper and safe use.
Please note that the contents may change without any prior notice due to reasons such as upgrading.

VLS6045EX Type

■PACKAGING STYLE

□REEL DIMENSIONS

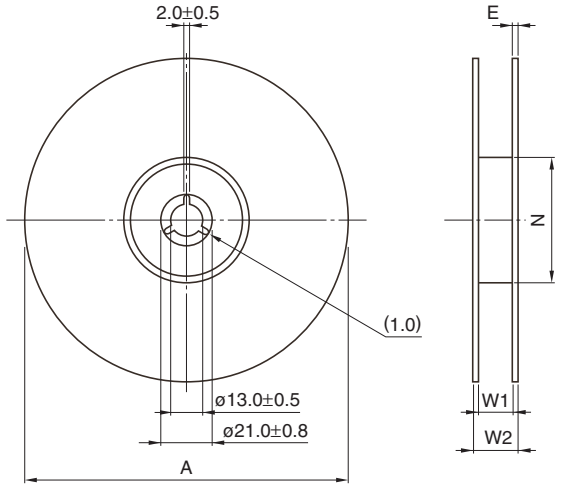

Dimensions in mm

Type	A	W1	W2	N	E
VLS6045EX	ø330	12.4	22.4	50min	2

* These values are typical values.

□TAPE DIMENSIONS

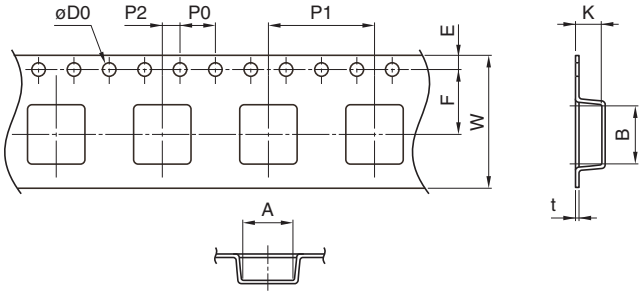

Dimensions in mm

Type	A	B	øD0	E	F	P0	P1	P2	W	K	t
VLS6045EX	6.3	6.3	1.5+0.1/-0	1.75±0.1	5.5±0.05	4.0±0.1	8.0±0.1	2.0±0.05	12.0±0.3	4.7	0.4

⚠ Please be sure to request delivery specifications that provide further details on the features and specifications of the products for proper and safe use.
Please note that the contents may change without any prior notice due to reasons such as upgrading.

OCEAN CHIPS
Океан Электроники
Поставка электронных компонентов

Компания «Океан Электроники» предлагает заключение долгосрочных отношений при поставках импортных электронных компонентов на взаимовыгодных условиях!

Наши преимущества:

- Поставка оригинальных импортных электронных компонентов напрямую с производств Америки, Европы и Азии, а так же с крупнейших складов мира;
- Широкая линейка поставок активных и пассивных импортных электронных компонентов (более 30 млн. наименований);
- Поставка сложных, дефицитных, либо снятых с производства позиций;
- Оперативные сроки поставки под заказ (от 5 рабочих дней);
- Экспресс доставка в любую точку России;
- Помощь Конструкторского Отдела и консультации квалифицированных инженеров;
- Техническая поддержка проекта, помощь в подборе аналогов, поставка прототипов;
- Поставка электронных компонентов под контролем ВП;
- Система менеджмента качества сертифицирована по Международному стандарту ISO 9001;
- При необходимости вся продукция военного и аэрокосмического назначения проходит испытания и сертификацию в лаборатории (по согласованию с заказчиком);
- Поставка специализированных компонентов военного и аэрокосмического уровня качества (Xilinx, Altera, Analog Devices, Intersil, Interpoint, Microsemi, Actel, Aeroflex, Peregrine, VPT, Syfer, Eurofarad, Texas Instruments, MS Kennedy, Miteq, Cobham, E2V, MA-COM, Hittite, Mini-Circuits, General Dynamics и др.);

Компания «Океан Электроники» является официальным дистрибьютором и эксклюзивным представителем в России одного из крупнейших производителей разъемов военного и аэрокосмического назначения **«JONHON»**, а так же официальным дистрибьютором и эксклюзивным представителем в России производителя высокотехнологичных и надежных решений для передачи СВЧ сигналов **«FORSTAR»**.

AVIC JONHON

«JONHON» (основан в 1970 г.)

Разъемы специального, военного и аэрокосмического назначения:

(Применяются в военной, авиационной, аэрокосмической, морской, железнодорожной, горно- и нефтедобывающей отраслях промышленности)

«FORSTAR» (основан в 1998 г.)

ВЧ соединители, коаксиальные кабели, кабельные сборки и микроволновые компоненты:

(Применяются в телекоммуникациях гражданского и специального назначения, в средствах связи, РЛС, а так же военной, авиационной и аэрокосмической отраслях промышленности).

FORSTAR®

Телефон: 8 (812) 309-75-97 (многоканальный)
Факс: 8 (812) 320-03-32
Электронная почта: ocean@oceanchips.ru
Web: http://oceanchips.ru/
Адрес: 198099, г. Санкт-Петербург, ул. Калинина, д. 2, корп. 4, лит. А