DS1305
Serial Alarm Real-Time Clock

BENEFITS AND FEATURES

- Completely Manages All Timekeeping Functions
  - Real-Time Clock (RTC) Counts Seconds, Minutes, Hours, Date of the Month, Month, Day of the Week, and Year with Leap-Year Compensation Valid Up to 2100
  - 96-Byte, Battery-Backed NV RAM for Data Storage
  - Two Time-Of-Day Alarms, Programmable on Combination of Seconds, Minutes, Hours, and Day of the Week
- Standard Serial Port Interfaces with Most Microcontrollers
  - Supports SPI (Serial Peripheral Interface) Modes 1 and 3 or Standard 3-Wire Interface
  - Burst Mode for Reading/Writing Successive Addresses in Clock/RAM
- Multiple Power Supply Pins Ease Adding Battery For Backup
  - Dual-Power Supply Pins for Primary and Backup Power Supplies
  - Optional Trickle Charge Output to Backup Supply
  - 2.0V to 5.5V Operation
- 20-Pin TSSOP Minimizes Required Space
- Optional Industrial Temperature Range: -40°C to +85°C Supports Operation in a Wide Range of Applications
- Underwriters Laboratory (UL®) Recognized

UL is a registered trademark of Underwriters Laboratories Inc.

PIN CONFIGURATIONS

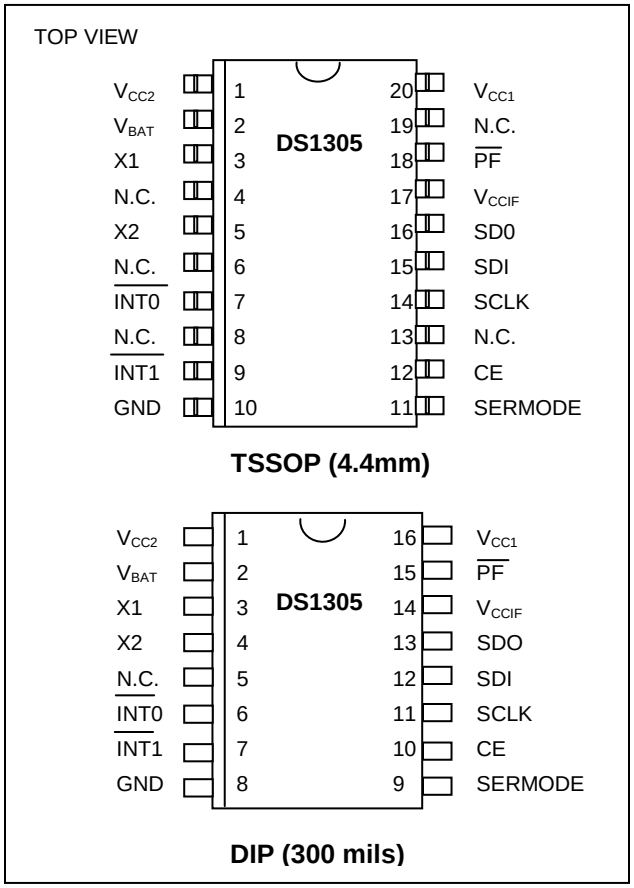

TYPICAL OPERATING CIRCUIT

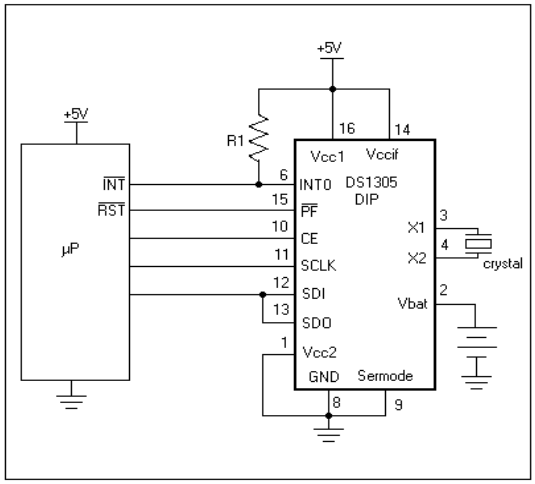

19-5055; Rev 4/15

ORDERING INFORMATION

PART	TEMP RANGE	PIN-PACKAGE	TOP MARK*
DS1305	0°C to +70°C	16 DIP (300 mils)	DS1305
DS1305N	-40°C to +85°C	16 DIP (300 mils)	DS1305N
DS1305E	0°C to +70°C	20 TSSOP (173 mils)	DS1305
DS1305E+	0°C to +70°C	20 TSSOP (173 mils)	DS1305
DS1305E/T&R	0°C to +70°C	20 TSSOP (173 mils)	DS1305
DS1305E+T&R	0°C to +70°C	20 TSSOP (173 mils)	DS1305
DS1305EN	-40°C to +85°C	20 TSSOP (173 mils)	DS1305
DS1305EN+	-40°C to +85°C	20 TSSOP (173 mils)	DS1305N
DS1305EN/T&R	-40°C to +85°C	20 TSSOP (173 mils)	DS1305
DS1305EN+T&R	-40°C to +85°C	20 TSSOP (173 mils)	DS1305

+Denotes a lead(Pb)-free/RoHS-compliant package.
T&R = Tape and reel.
**An "N" on the top mark denotes an industrial device.*

DESCRIPTION

The DS1305 serial alarm real-time clock provides a full binary coded decimal (BCD) clock calendar that is accessed by a simple serial interface. The clock/calendar provides seconds, minutes, hours, day, date, month, and year information. The end of the month date is automatically adjusted for months with fewer than 31 days, including corrections for leap year. The clock operates in either the 24-hour or 12-hour format with AM/PM indicator. In addition, 96 bytes of NV RAM are provided for data storage. The DS1305 will maintain the time and date, provided the oscillator is enabled, as long as at least one supply is at a valid level.

An interface logic power-supply input pin (V_{CCIF}) allows the DS1305 to drive SDO and $\overline{PF}$ pins to a level that is compatible with the interface logic. This allows an easy interface to 3V logic in mixed supply systems.

The DS1305 offers dual-power supplies as well as a battery input pin. The dual power supplies support a programmable trickle charge circuit that allows a rechargeable energy source (such as a super cap or rechargeable battery) to be used for a backup supply. The V_{BAT} pin allows the device to be backed up by a non-rechargeable battery. The DS1305 is fully operational from 2.0V to 5.5V.

Two programmable time-of-day alarms are provided by the DS1305. Each alarm can generate an interrupt on a programmable combination of seconds, minutes, hours, and day. "Don't care" states can be inserted into one or more fields if it is desired for them to be ignored for the alarm condition. The time-of-day alarms can be programmed to assert two different interrupt outputs or to assert one common interrupt output. Both interrupt outputs operate when the device is powered by V_{CC1}, V_{CC2}, or V_{BAT}.

The DS1305 supports a direct interface to SPI serial data ports or standard 3-wire interface. A straightforward address and data format is implemented in which data transfers can occur 1 byte at a time or in multiple-byte-burst mode.

PIN DESCRIPTION

PIN		NAME	FUNCTION
DIP	TSSOP		
1	1	V_{CC2}	Backup Power Supply. This is the secondary power supply pin. In systems using the trickle charger, the rechargeable energy source is connected to this pin.
2	2	V_{BAT}	Battery Input for Standard +3V Lithium Cell or Other Energy Source. If not used, V_{BAT} must be connect to ground. Diodes must not be placed in series between V_{BAT} and the battery, or improper operation will result. UL recognized to ensure against reverse charging current when used in conjunction with a lithium battery. See "Conditions of Acceptability" at www.maxim-ic.com/TechSupport/QA/ntrl.htm.
3	3	X1	Connections for Standard 32.768kHz Quartz Crystal. The internal oscillator is designed for operation with a crystal having a specified load capacitance of 6pF. For more information on crystal selection and crystal layout considerations, refer to *Application Note 58: Crystal Considerations with Dallas Real-Time Clocks*. The DS1305 can also be driven by an external 32.768kHz oscillator. In this configuration, the X1 pin is connected to the external oscillator signal and the X2 pin is floated.
4	5	X2	
5	4, 6, 8, 13, 19	N.C.	No Connection
6	7	`INT0`	Active-Low Interrupt 0 Output. The `INT0` pin is an active-low output of the DS1305 that can be used as an interrupt input to a processor. The `INT0` pin can be programmed to be asserted by only Alarm 0 or can be programmed to be asserted by either Alarm 0 or Alarm 1. The `INT0` pin remains low as long as the status bit causing the interrupt is present and the corresponding interrupt enable bit is set. The `INT0` pin operates when the DS1305 is powered by V_{CC1}, V_{CC2}, or V_{BAT}. The `INT0` pin is an open-drain output and requires an external pullup resistor.
7	9	`INT1`	Active-Low Interrupt 1 Output. The `INT1` pin is an active-low output of the DS1305 that can be used as an interrupt input to a processor. The `INT1` pin can be programmed to be asserted by Alarm 1 only. The `INT1` pin remains low as long as the status bit causing the interrupt is present and the corresponding interrupt enable bit is set. The `INT1` pin operates when the DS1305 is powered by V_{CC1}, V_{CC2}, or V_{BAT}. The `INT1` pin is an open-drain output and requires an external pullup resistor. Both `INT0` and `INT1` are open-drain outputs. The two interrupts and the internal clock continue to run regardless of the level of V_{CC} (as long as a power source is present).
8	10	GND	Ground
9	11	SERMODE	Serial Interface Mode. The SERMODE pin offers the flexibility to choose between two serial interface modes. When connected to GND, standard 3-wire communication is selected. When connected to V_{CC}, SPI communication is selected.
10	12	CE	Chip Enable. The chip-enable signal must be asserted high during a read or a write for both 3-wire and SPI communication. This pin has an internal 55kΩ pulldown resistor (typical).
11	14	SCLK	Serial Clock Input. SCLK is used to synchronize data movement on the serial interface for either the SPI or 3-wire interface.

PIN DESCRIPTION (continued)

PIN		NAME	FUNCTION
DIP	TSSOP		
12	15	SDI	Serial Data Input. When SPI communication is selected, the SDI pin is the serial data input for the SPI bus. When 3-wire communication is selected, this pin must be tied to the SDO pin (the SDI and SDO pins function as a single I/O pin when tied together).
13	16	SDO	Serial Data Output. When SPI communication is selected, the SDO pin is the serial data output for the SPI bus. When 3-wire communication is selected, this pin must be tied to the SDI pin (the SDI and SDO pins function as a single I/O pin when tied together).
14	17	V_{CCIF}	Interface Logic Power-Supply Input. The V_{CCIF} pin allows the DS1305 to drive SDO and $\overline{PF}$ output pins to a level that is compatible with the interface logic, thus allowing an easy interface to 3V logic in mixed supply systems. This pin is physically connected to the source connection of the p-channel transistors in the output buffers of the SDO and $\overline{PF}$ pins.
15	18	$\overline{PF}$	Active-Low Power-Fail Output. The $\overline{PF}$ pin is used to indicate loss of the primary power supply (V_{CC1}). When V_{CC1} is less than V_{CC2} or is less than V_{BAT}, the $\overline{PF}$ pin is driven low.
16	20	V_{CC1}	Primary Power Supply. DC power is provided to the device on this pin.

OPERATION

The block diagram in Figure 1 shows the main elements of the serial alarm RTC. The following paragraphs describe the function of each pin.

Figure 1. BLOCK DIAGRAM

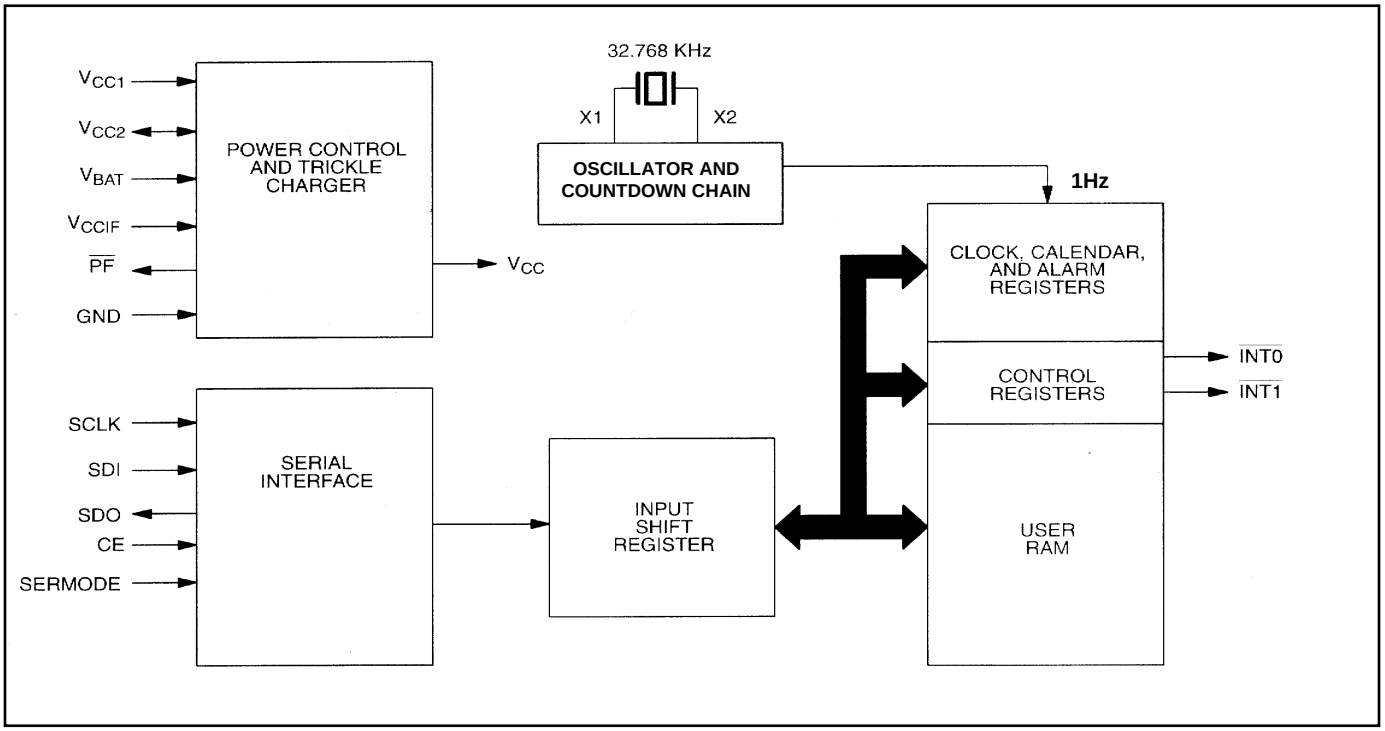

RECOMMENDED LAYOUT FOR CRYSTAL

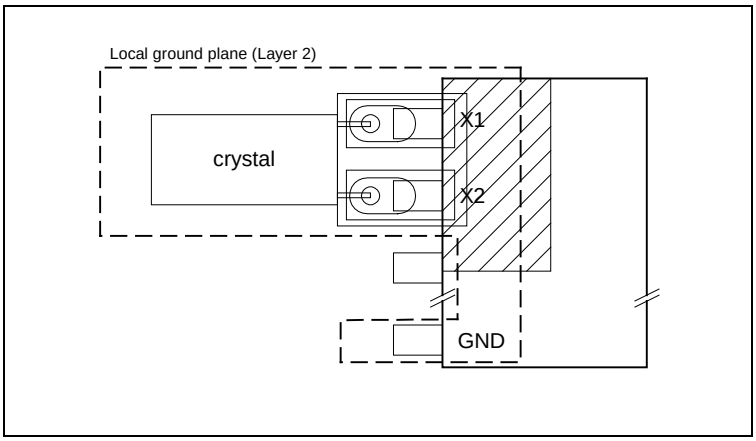

CLOCK ACCURACY

The accuracy of the clock is dependent upon the accuracy of the crystal and the accuracy of the match between the capacitive load of the oscillator circuit and the capacitive load for which the crystal was trimmed. Additional error is added by crystal frequency drift caused by temperature shifts. External circuit noise coupled into the oscillator circuit can result in the clock running fast. Refer to *Application Note 58*, "Crystal Considerations with Dallas Real-Time Clocks" for detailed information.

Table 1. Crystal Specifications

PARAMETER	SYMBOL	MIN	TYP	MAX	UNITS
Nominal Frequency	f_O		32.768		kHz
Series Resistance	ESR			45	kΩ
Load Capacitance	C_L		6		pF

Note: *The crystal, traces, and crystal input pins should be isolated from RF generating signals. Refer to* Applications Note 58: Crystal Considerations for Dallas Real-Time Clocks *for additional specifications.*

CLOCK, CALENDAR, AND ALARM

The time and calendar information is obtained by reading the appropriate register bytes. The RTC registers and user RAM are illustrated in Figure 2. The time, calendar, and alarm are set or initialized by writing the appropriate register bytes. Note that some bits are set to 0. These bits always read 0 regardless of how they are written. Also note that registers 12h to 1Fh (read) and registers 92h to 9Fh are reserved. These registers always read 0 regardless of how they are written. The contents of the time, calendar, and alarm registers are in the BCD format. The day register increments at midnight. Values that correspond to the day of week are user-defined but must be sequential (e.g., if 1 equals Sunday, 2 equals Monday and so on). Illogical time and date entries result in undefined operation.

Except where otherwise noted, the initial power on state of all registers is not defined. Therefore, it is important to enable the oscillator (EOSC = 0) and disable write protect (WP = 0) during initial configuration.

WRITING TO THE CLOCK REGISTERS

The internal time and date registers continue to increment during write operations. However, the countdown chain is reset when the seconds register is written. Writing the time and date registers within one second after writing the seconds register ensures consistent data.

Terminating a write before the last bit is sent aborts the write for that byte.

READING FROM THE CLOCK REGISTERS

Buffers are used to copy the time and date register at the beginning of a read. When reading in burst mode, the user copy is static while the internal registers continue to increment.

Figure 2. RTC REGISTERS AND ADDRESS MAP

HEX ADDRESS		Bit7	Bit6	Bit5	Bit4	Bit3	Bit2	Bit1	Bit0	RANGE
READ	WRITE									
00h	80h	0	10 Seconds			Seconds				00–59
01h	81h	0	10 Minutes			Minutes				00–59
02h	82h	0	12	P	10 Hour	Hours				01–12 + P/A
				A						00–23
			24	10						
03h	83h	0	0	0	0	Day				1–7
04h	84h	0	0	10 Date		Date				1–31
05h	85h	0	0	10 Month		Month				01–12
06h	86h	10 Year				Year				00–99
—	—	Alarm 0								—
07h	87h	M	10 Seconds Alarm			Seconds Alarm				00–59
08h	88h	M	10 Minutes Alarm			Minutes Alarm				00–59
09h	89h	M	12	P	10 Hour	Hour Alarm				01–12 + P/A
				A						00–23
			24	10						
0Ah	8Ah	M	0	0	0	Day Alarm				01–07
—	—	Alarm 1								—
0Bh	8Bh	M	10 Seconds Alarm			Seconds Alarm				00–59
0Ch	8Ch	M	10 Minutes Alarm			Minutes Alarm				00–59
0Dh	8Dh	M	12	P	10 Hour	Hour Alarm				01–12 + P/A
				A						00–23
			24	10						
0Eh	8Eh	M	0	0	0	Day Alarm				01–07
0Fh	8Fh	Control Register								—
10h	90h	Status Register								—
11h	91h	Trickle Charger Register								—
12h–1Fh	92h–9Fh	Reserved								—
20h–7Fh	A0h–FFh	96 Bytes User RAM								00–FF

Note: *Range for alarm registers does not include mask'm' bits.*

The DS1305 can be run in either 12-hour or 24-hour mode. Bit 6 of the hours register is defined as the 12- or 24-hour mode select bit. When high, the 12-hour mode is selected. In the 12-hour mode, bit 5 is the AM/PM bit with logic high being PM. In the 24-hour mode, bit 5 is the second 10-hour bit (20 to 23 hours).

The DS1305 contains two time-of-day alarms. Time-of-day Alarm 0 can be set by writing to registers 87h to 8Ah. Time-of-day Alarm 1 can be set by writing to registers 8Bh to 8Eh. The alarms can be programmed (by the INTCN bit of the control register) to operate in two different modes; each alarm can drive its own separate interrupt output or both alarms can drive a common interrupt output. Bit 7 of each of the time-of-day alarm registers are mask bits (Table 2). When all of the mask bits are logic 0, a time-of-day alarm only occurs once per week when the values stored in timekeeping registers 00h to 03h match the values stored in the time-of-day alarm registers. An alarm is generated every day when bit 7 of the day alarm register is set to a logic 1. An alarm is generated every hour when bit 7 of the day and hour alarm registers is set to a logic 1. Similarly, an alarm is generated every minute when bit 7 of the day,

hour, and minute alarm registers is set to a logic 1. When bit 7 of the day, hour, minute, and seconds alarm registers is set to a logic 1, alarm occurs every second.

During each clock update, the RTC compares the Alarm 0 and Alarm 1 registers with the corresponding clock registers. When a match occurs, the corresponding alarm flag bit in the status register is set to a 1. If the corresponding alarm interrupt enable bit is enabled, an interrupt output is activated.

Table 2. TIME-OF-DAY ALARM MASK BITS

ALARM REGISTER MASK BITS (BIT 7)				FUNCTION
SECONDS	MINUTES	HOURS	DAYS	
1	1	1	1	Alarm once per second
0	1	1	1	Alarm when seconds match
0	0	1	1	Alarm when minutes and seconds match
0	0	0	1	Alarm hours, minutes, and seconds match
0	0	0	0	Alarm day, hours, minutes and seconds match

SPECIAL PURPOSE REGISTERS

The DS1305 has three additional registers (control register, status register, and trickle charger register) that control the RTC, interrupts, and trickle charger.

CONTROL REGISTER (READ 0Fh, WRITE 8Fh)

BIT7	BIT6	BIT5	BIT4	BIT3	BIT2	BIT1	BIT0
$\overline{\text{EOSC}}$	WP	0	0	0	INTCN	AIE1	AIEO

$\overline{\text{EOSC}}$ **(Enable Oscillator)** – This bit when set to logic 0 starts the oscillator. When this bit is set to a logic 1, the oscillator is stopped and the DS1305 is placed into a low-power standby mode with a current drain of less than 100nA when power is supplied by V_{BAT} or V_{CC2}. On initial application of power, this bit will be set to a logic 1.

WP (Write Protect) – Before any write operation to the clock or RAM, this bit must be logic 0. When high, the write protect bit prevents a write operation to any register, including bits 0, 1, 2, and 7 of the control register. Upon initial power-up, the state of the WP bit is undefined. Therefore, the WP bit should be cleared before attempting to write to the device.

INTCN (Interrupt Control) – This bit controls the relationship between the two time-of-day alarms and the interrupt output pins. When the INTCN bit is set to a logic 1, a match between the timekeeping registers and the Alarm 0 registers activates the $\overline{\text{INT0}}$ pin (provided that the alarm is enabled) and a match between the timekeeping registers and the Alarm 1 registers activate the $\overline{\text{INT1}}$ pin (provided that the alarm is enabled). When the INTCN bit is set to a logic 0, a match between the timekeeping registers and either Alarm 0 or Alarm 1 activate the $\overline{\text{INT0}}$ pin (provided that the alarms are enabled). $\overline{\text{INT1}}$ has no function when INTCN is set to a logic 0.

AIE0 (Alarm Interrupt Enable 0) – When set to a logic 1, this bit permits the interrupt 0 request flag (IRQF0) bit in the status register to assert $\overline{\text{INT0}}$. When the AIE0 bit is set to logic 0, the IRQF0 bit does not initiate the $\overline{\text{INT0}}$ signal.

AIE1 (Alarm Interrupt Enable 1) – When set to a logic 1, this bit permits the interrupt 1 request flag (IRQF1) bit in the status register to assert $\overline{INT1}$ (when INTCN = 1) or to assert $\overline{INT0}$ (when INTCN = 0). When the AIE1 bit is set to logic 0, the IRQF1 bit does not initiate an interrupt signal.

STATUS REGISTER (READ 10h)

BIT7	BIT6	BIT5	BIT4	BIT3	BIT2	BIT1	BIT0
0	0	0	0	0	0	IRQF1	IRQF0

IRQF0 (Interrupt 0 Request Flag) – A logic 1 in the interrupt request flag bit indicates that the current time has matched the Alarm 0 registers. If the AIE0 bit is also a logic 1, the $\overline{INT0}$ pin goes low. IRQF0 is cleared when the address pointer goes to any of the Alarm 0 registers during a read or write.

IRQF1 (Interrupt 1 Request Flag) – A logic 1 in the interrupt request flag bit indicates that the current time has matched the Alarm 1 registers. This flag can be used to generate an interrupt on either $\overline{INT0}$ or $\overline{INT1}$ depending on the status of the INTCN bit in the control register. If the INTCN bit is set to a logic 1 and IRQF1 is at a logic 1 (and AIE1 bit is also a logic 1), the $\overline{INT1}$ pin goes low. If the INTCN bit is set to a logic 0 and IRQF1 is at a logic 1 (and AIE1 bit is also a logic 1), the $\overline{INT0}$ pin goes low. IRQF1 is cleared when the address pointer goes to any of the Alarm 1 registers during a read or write.

TRICKLE CHARGE REGISTER (READ 11H, WRITE 91H)

This register controls the trickle charge characteristics of the DS1305. The simplified schematic of Figure 3 shows the basic components of the trickle charger. The trickle-charge select (TCS) bits (bits 4–7) control the selection of the trickle charger. To prevent accidental enabling, only a pattern of 1010 enables the trickle charger. All other patterns disable the trickle charger. On the initial application of power, the DS1305 powers up with the trickle charger disabled. The diode select (DS) bits (bits 2–3) select whether one diode or two diodes are connected between V_{CC1} and V_{CC2}. The resistor select (RS) bits select the resistor that is connected between V_{CC1} and V_{CC2}. The resistor and diodes are selected by the RS and DS bits, as shown in Table 3.

Figure 3. PROGRAMMABLE TRICKLE CHARGER

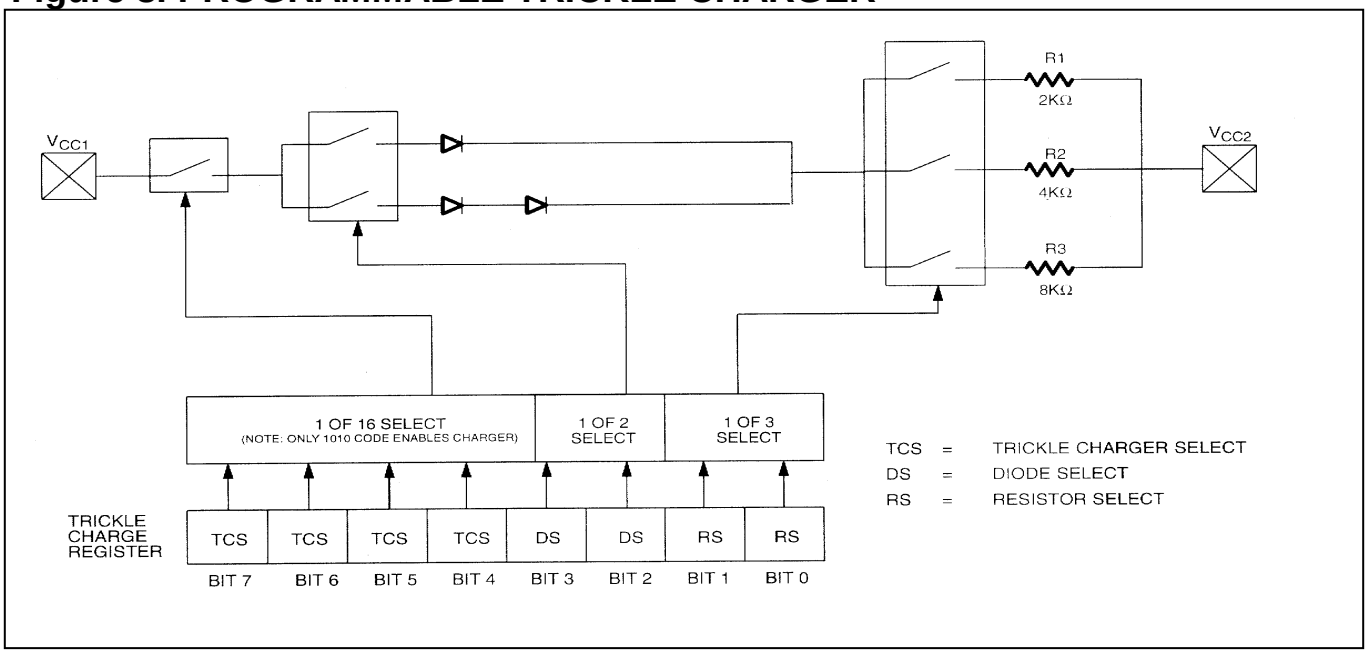

Table 3. TRICKLE CHARGER RESISTOR AND DIODE SELECT

TCS Bit 7	TCS Bit 6	TCS Bit 5	TCS Bit 4	DS Bit 3	DS Bit 2	RS Bit 1	RS Bit 0	FUNCTION
X	X	X	X	X	X	0	0	Disabled
X	X	X	X	0	0	X	X	Disabled
X	X	X	X	1	1	X	X	Disabled
1	0	1	0	0	1	0	1	1 Diode, 2kΩ
1	0	1	0	0	1	1	0	1 Diode, 4kΩ
1	0	1	0	0	1	1	1	1 Diode, 8kΩ
1	0	1	0	1	0	0	1	2 Diodes, 2kΩ
1	0	1	0	1	0	1	0	2 Diodes, 4kΩ
1	0	1	0	1	0	1	1	2 Diodes, 8kΩ
0	1	0	1	1	1	0	0	Initial power-on state

The user determines diode and resistor selection according to the maximum current desired for battery or super cap charging. The maximum charging current can be calculated as illustrated in the following example. Assume that a system power supply of 5V is applied to V_{CC1} and a super cap is connected to V_{CC2}. Also assume that the trickle charger has been enabled with 1 diode and resister R1 between V_{CC1} and V_{CC2}. The maximum current I_{MAX} would, therefore, be calculated as follows:

$$I_{MAX} = (5.0V - \text{diode drop}) / R1 \approx (5.0V - 0.7V) / 2k\Omega \approx 2.2mA$$

As the super cap charges, the voltage drop between V_{CC1} and V_{CC2} decreases and, therefore, the charge current decreases.

POWER CONTROL

Power is provided through the V_{CC1}, V_{CC2}, and V_{BAT} pins. Three different power-supply configurations are illustrated in Figure 4. Configuration 1 shows the DS1305 being backed up by a nonrechargeable energy source such as a lithium battery. In this configuration, the system power supply is connected to V_{CC1} and V_{CC2} is grounded. The DS1305 is write-protected if V_{CC1} is less than V_{BAT}. The DS1305 is fully accessible when V_{CC1} is greater than V_{BAT} + 0.2V.

Configuration 2 illustrates the DS1305 being backed up by a rechargeable energy source. In this case, the V_{BAT} pin is grounded, V_{CC1} is connected to the primary power supply, and V_{CC2} is connected to the secondary supply (the rechargeable energy source). The DS1305 operates from the larger of V_{CC1} or V_{CC2}. When V_{CC1} is greater than V_{CC2} + 0.2V (typical), V_{CC1} powers the DS1305. When V_{CC1} is less than V_{CC2}, V_{CC2} powers the DS1305. The DS1305 does not write-protect itself in this configuration.

Configuration 3 shows the DS1305 in battery operate mode where the device is powered only by a single battery. In this case, the V_{CC1} and V_{BAT} pins are grounded and the battery is connected to the V_{CC2} pin.

Only these three configurations are allowed. Unused supply pins must be grounded.

Figure 4. POWER-SUPPLY CONFIGURATIONS

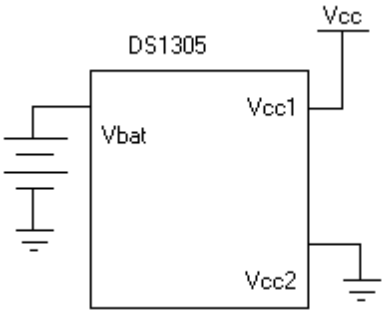

CONFIGURATION 1: BACKUP SUPPLY IS NONRECHARGEABLE LITHIUM BATTERY

NOTE: DEVICE IS WRITE-PROTECTED IF $V_{CC} < V_{CCTP}$.

CONFIGURATION 2: BACKUP SUPPLY IS A RECHARGEABLE BATTERY OR SUPER CAPACITOR

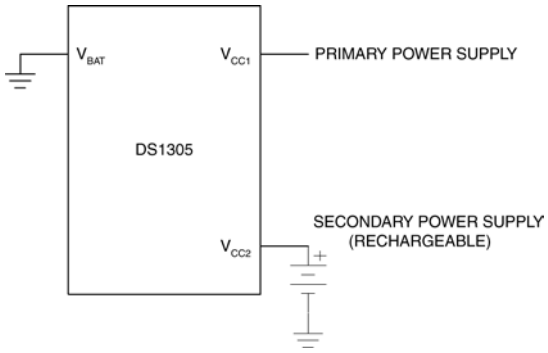

NOTE: DEVICE DOES NOT PROVIDE AUTOMATIC WRITE PROTECTION.

CONFIGURATION 3: BATTERY OPERATE MODE

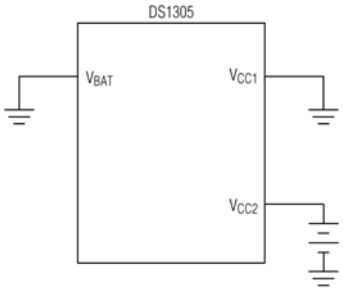

SERIAL INTERFACE

The DS1305 offers the flexibility to choose between two serial interface modes. The DS1305 can communicate with the SPI interface or with a standard 3-wire interface. The interface method used is determined by the SERMODE pin. When this pin is connected to V_{CC}, SPI communication is selected. When this pin is connected to ground, standard 3-wire communication is selected.

SERIAL PERIPHERAL INTERFACE (SPI)

The serial peripheral interface (SPI) is a synchronous bus for address and data transfer, and is used when interfacing with the SPI bus on specific Motorola microcontrollers such as the 68HC05C4 and the 68HC11A8. The SPI mode of serial communication is selected by tying the SERMODE pin to V_{CC}. Four pins are used for the SPI. The four pins are the SDO (serial data out), SDI (serial data in), CE (chip enable), and SCLK (serial clock). The DS1305 is the slave device in an SPI application, with the microcontroller being the master.

The SDI and SDO pins are the serial data input and output pins for the DS1305, respectively. The CE input is used to initiate and terminate a data transfer. The SCLK pin is used to synchronize data movement between the master (microcontroller) and the slave (DS1305) devices.

The shift clock (SCLK), which is generated by the microcontroller, is active only during address and data transfer to any device on the SPI bus. The inactive clock polarity is programmable in some microcontrollers. The DS1305 determines the clock polarity by sampling SCLK when CE becomes active. Therefore, either SCLK polarity can be accommodated. Input data (SDI) is latched on the internal strobe edge and output data (SDO) is shifted out on the shift edge (Figure 5). There is one clock for each bit transferred. Address and data bits are transferred in groups of eight, MSB first.

Figure 5. SERIAL CLOCK AS A FUNCTION OF MICROCONTROLLER CLOCK POLARITY (CPOL)

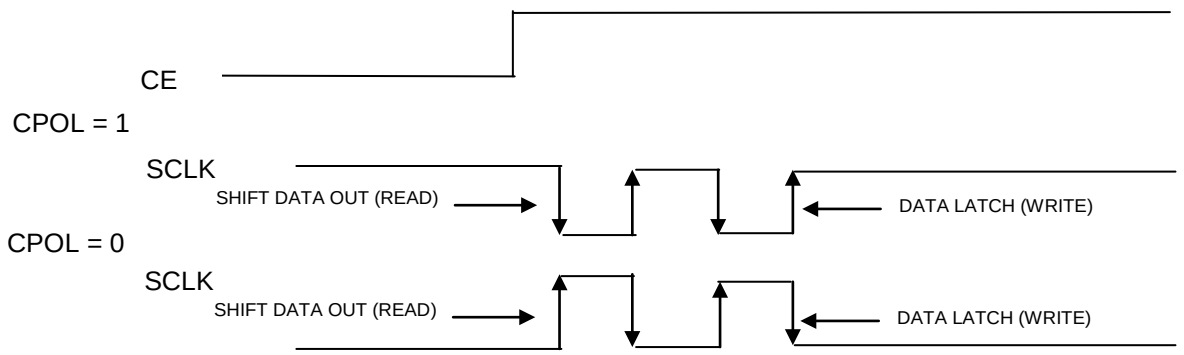

NOTE 1: CPHA BIT POLARITY (IF APPLICABLE) MAY NEED TO BE SET ACCORDINGLY.
NOTE 2: CPOL IS A BIT THAT IS SET IN THE MICROCONTROLLER'S CONTROL REGISTER.
NOTE 3: SDO REMAINS AT HIGH-Z UNTIL 8 BITS OF DATA ARE READY TO BE SHIFTED OUT DURING A READ.

ADDRESS AND DATA BYTES

Address and data bytes are shifted MSB first into the serial data input (SDI) and out of the serial data output (SDO). Any transfer requires the address of the byte to specify a write or read to either a RTC or RAM location, followed by one or more bytes of data. Data is transferred out of the SDO for a read operation and into the SDI for a write operation (Figures 6 and 7).

Figure 6. SPI SINGLE-BYTE WRITE

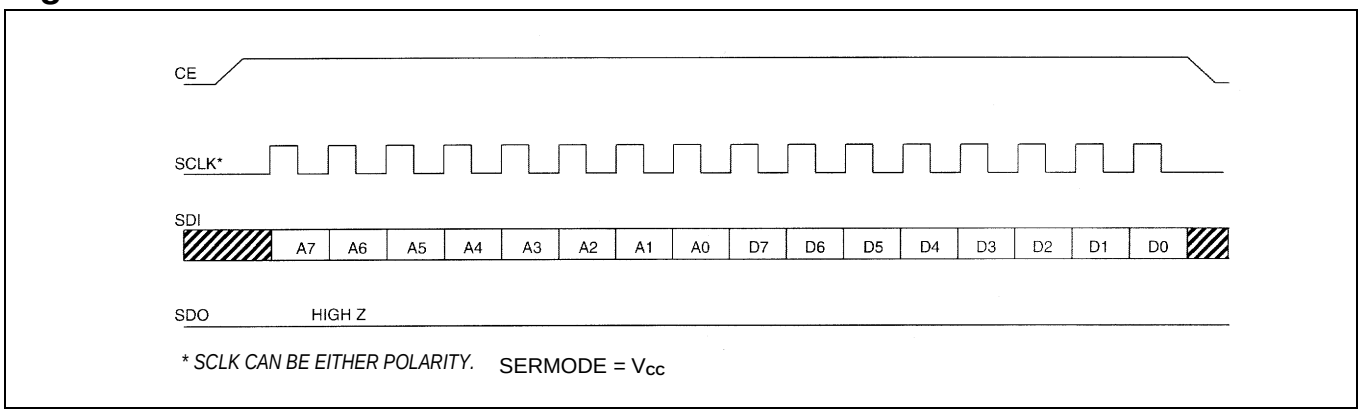

Figure 7. SPI SINGLE-BYTE READ

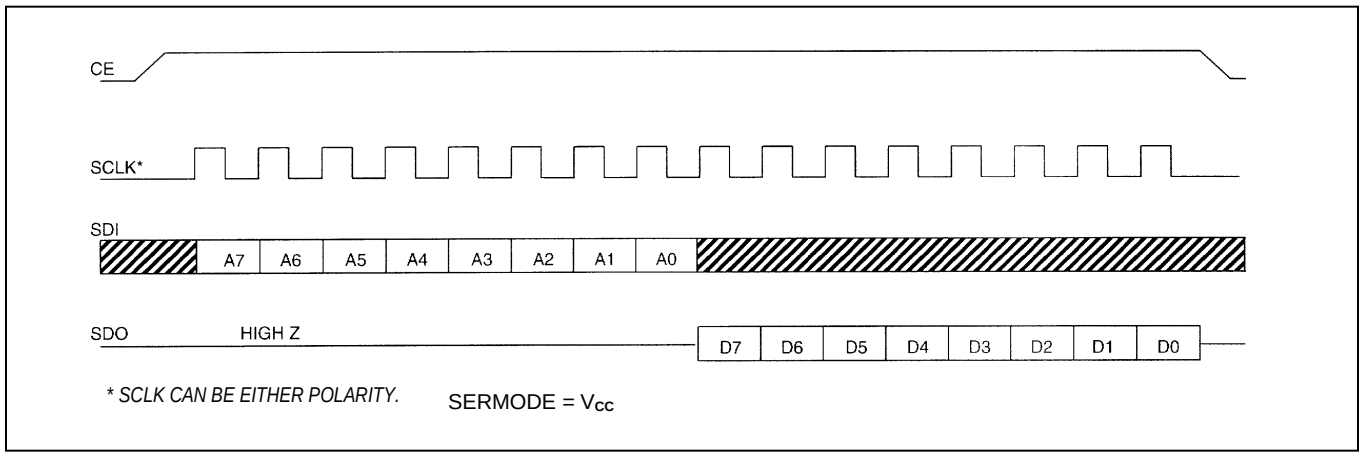

The address byte is always the first byte entered after CE is driven high. The most significant bit (A7) of this byte determines if a read or write takes place. If A7 is 0, one or more read cycles occur. If A7 is 1, one or more write cycles occur.

Data transfers can occur one byte at a time or in multiple-byte burst mode. After CE is driven high an address is written to the DS1305. After the address, one or more data bytes can be written or read. For a single-byte transfer, one byte is read or written and then CE is driven low. For a multiple-byte transfer, however, multiple bytes can be read or written to the DS1305 after the address has been written. Each read or write cycle causes the RTC register or RAM address to automatically increment. Incrementing continues until the device is disabled. When the RTC is selected, the address wraps to 00h after incrementing to 1Fh (during a read) and wraps to 80h after incrementing to 9Fh (during a write). When the RAM is selected, the address wraps to 20h after incrementing to 7Fh (during a read) and wraps to A0h after incrementing to FFh (during a write).

Figure 8. SPI MULTIPLE-BYTE BURST TRANSFER

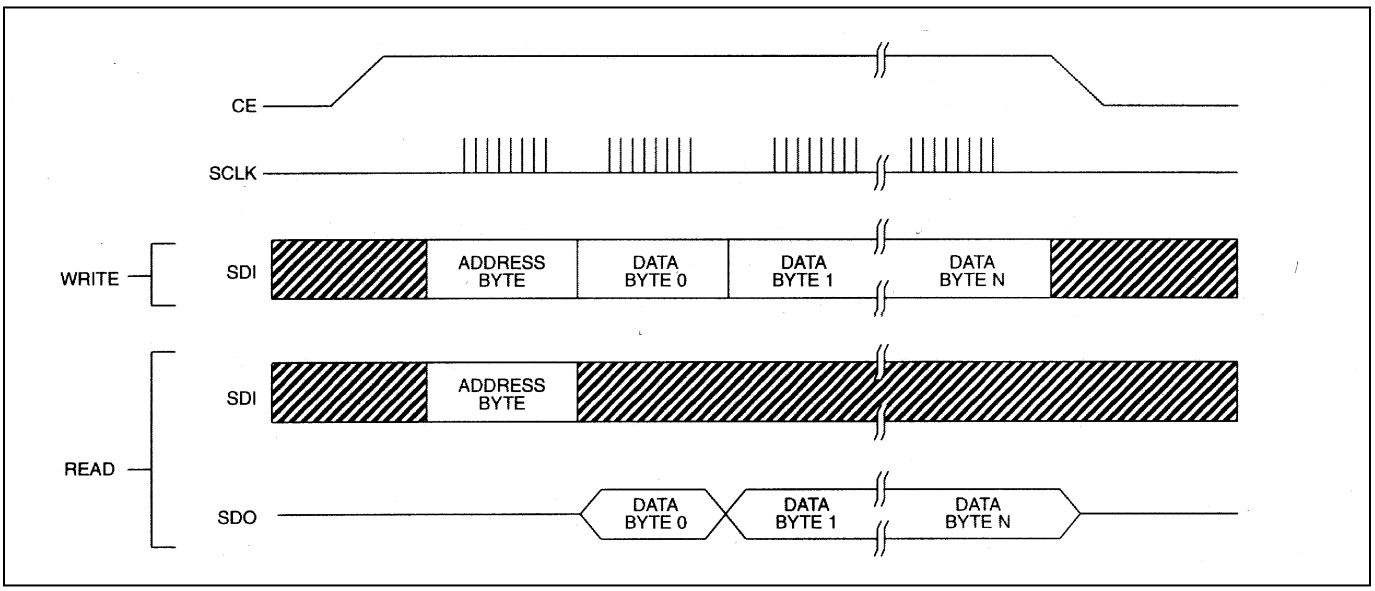

READING AND WRITING IN BURST MODE

Burst mode is similar to a single-byte read or write, except that CE is kept high and additional SCLK cycles are sent until the end of the burst. The clock registers and the user RAM can be read or written in burst mode. When accessing the clock registers in burst mode, the address pointer wraps around after reaching 1Fh (9Fh for writes). When accessing the user RAM in burst mode, the address pointer wraps around after reaching 7Fh (FFh for writes).

3-WIRE INTERFACE

The 3-wire interface mode operates similarly to the SPI mode. However, in 3-wire mode there is one I/O instead of separate data in and data out signals. The 3-wire interface consists of the I/O (SDI and SDO pins tied together), CE, and SCLK pins. In 3-wire mode, each byte is shifted in LSB first unlike SPI mode where each byte is shifted in MSB first.

As is the case with the SPI mode, an address byte is written to the device followed by a single data byte or multiple data bytes. Figure 9 illustrates a read and write cycle. In 3-wire mode, data is input on the rising edge of SCLK and output on the falling edge of SCLK.

Figure 9. 3-WIRE SINGLE-BYTE TRANSFER

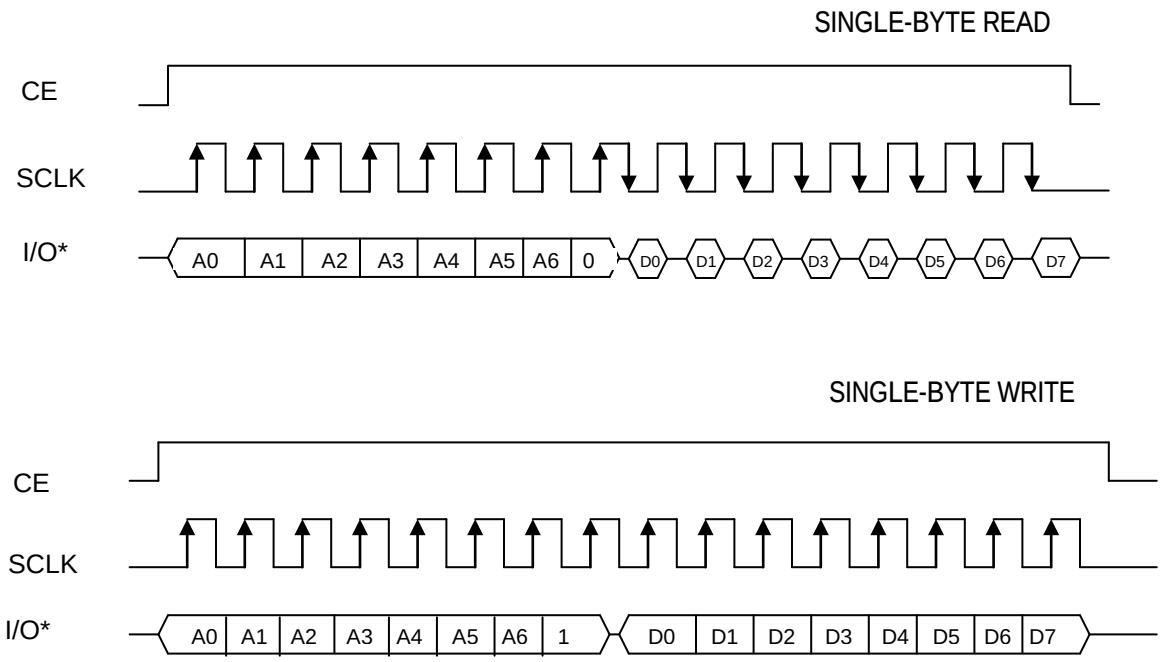

NOTE: IN BURST MODE, CE IS KEPT HIGH AND ADDITIONAL SCLK CYCLES ARE SENT UNTIL THE END OF THE BURST.
**I/O IS SDI AND SDO TIED TOGETHER.*

SERMODE = GND

ABSOLUTE MAXIMUM RATINGS

Voltage Range on Any Pin Relative to Ground……..-0.5V to +7.0V
Storage Temperature Range…….-55°C to +125°C
Soldering Temperature…….See IPC/JEDEC J-STD-020 Specification

This is a stress rating only and functional operation of the device at these or any other conditions beyond those indicated in the operation sections of this specification is not implied. Exposure to absolute maximum rating conditions for extended periods of time can affect reliability.

OPERATING RANGE

RANGE	TEMP RANGE	V_{CC} (V)
Commercial	0°C to +70°C	2.0 to 5.5 V_{CC1} or V_{CC2}
Industrial	-40°C to +85°C	2.0 to 5.5 V_{CC1} or V_{CC2}

RECOMMENDED DC OPERATING CONDITIONS

(Over the operating range, unless otherwise specified.)

PARAMETER	SYMBOL		MIN	TYP	MAX	UNITS	NOTES
Supply Voltage V_{CC1}, V_{CC2}	V_{CC1}, V_{CC2}		2.0		5.5	V	7
Logic 1 Input	V_{IH}		2.0		V_{CC} + 0.3	V	
Logic 0 Input	V_{IL}	V_{CC} = 2.0V	-0.3		+0.3	V	
		V_{CC} = 5V			+0.8		
V_{BAT} Battery Voltage	V_{BAT}		2.0		5.5	V	
V_{CCIF} Supply Voltage	V_{CCIF}		2.0		5.5	V	11

DC ELECTRICAL CHARACTERISTICS

(Over the operating range, unless otherwise specified.)

PARAMETER		SYMBOL		MIN	TYP	MAX	UNITS	NOTES
Input Leakage		I_{LI}		-100		+500	µA	
Output Leakage		I_{LO}		-1		1	µA	
Logic 0 Output	I_{OL}= 1.5mA	V_{OL}	V_{CC} = 2.0V			0.4	V	
	I_{OL} = 4.0mA		V_{CC} = 5V			0.4		
Logic 1 Output	I_{OH} = -0.4mA	V_{OH}	V_{CCIF} = 2.0V	1.6			V	
	I_{OH} = -1.0mA		V_{CCIF} = 5V	2.4				
V_{CC1} Active Supply Current		I_{CC1A}	V_{CC1} = 2.0V			0.425	mA	2, 8
			V_{CC1} = 5V			1.28		
V_{CC1} Timekeeping Current (Osc on)		I_{CC1T}	V_{CC1} = 2.0V			25.3	µA	1, 8, 12
			V_{CC1} = 5V			81		
V_{CC1} Standby Current (Osc off)		I_{CC1S}	V_{CC1} = 2.0V			25	µA	6, 8, 12
			V_{CC1} = 5V			80		
V_{CC2} Active Supply Current		I_{CC2A}	V_{CC2} = 2.0V			0.4	mA	2, 9
			V_{CC2} = 5V			1.2		
V_{CC2} Timekeeping Current (Osc on)		I_{CC2T}	V_{CC2} = 2.0V			0.3	µA	1, 9, 12
			V_{CC2} = 5V			1		
V_{CC2} Standby Current (Osc off)		I_{CC2S}	V_{CC2} = 2.0V			200	nA	6, 9, 12
			V_{CC2} = 5V			200		
Battery Timekeeping Current		I_{BAT}	V_{BAT} = 3V			400	nA	10, 12
Battery Standby Current		I_{BATS}	V_{BAT} = 3V			200	nA	10, 12
V_{CC} Trip Point		V_{CCTP}		V_{BAT} - 50		V_{BAT} + 200	mV	
Trickle Charge Resistors		R1			2		kΩ	
		R2			4			
		R3			8			
Trickle Charge Diode Voltage Drop		V_{TD}			0.7		V	

CAPACITANCE

(T_A = +25°C)

PARAMETER	SYMBOL	MIN	TYP	MAX	UNITS	NOTES
Input Capacitance	C_I		10		pF	
Output Capacitance	C_O		15		pF	

3-WIRE AC ELECTRICAL CHARACTERISTICS

(Over the operating range, unless otherwise specified.) (Figure 10 and Figure 11)

PARAMETER	SYMBOL		MIN	TYP	MAX	UNITS	NOTES
Data to CLK Setup	t_{DC}	V_{CC} = 2.0V	200			ns	3,4
		V_{CC} = 5V	50				
CLK to Data Hold	t_{CDH}	V_{CC} = 2.0V	280			ns	3,4
		V_{CC} = 5V	70				
CLK to Data Delay	t_{CDD}	V_{CC} = 2.0V			800	ns	3,4,5
		V_{CC} = 5V			200		
CLK Low Time	t_{CL}	V_{CC} = 2.0V	1000			ns	4
		V_{CC} = 5V	250				
CLK High Time	t_{CH}	V_{CC} = 2.0V	1000			ns	4
		V_{CC} = 5V	250				
CLK Frequency	t_{CLK}	V_{CC} = 2.0V			0.6	MHz	4
		V_{CC} = 5V	DC		2.0		
CLK Rise and Fall	t_R, t_F	V_{CC} = 2.0V			2000	ns	
		V_{CC} = 5V			500		
CE to CLK Setup	t_{CC}	V_{CC} = 2.0V	4			µs	4
		V_{CC} = 5V	1				
CLK to CE Hold	t_{CCH}	V_{CC} = 2.0V	240			ns	4
		V_{CC} = 5V	60				
CE Inactive Time	t_{CWH}	V_{CC} = 2.0V	4			µs	4
		V_{CC} = 5V	1				
CE to Output High-Z	t_{CDZ}	V_{CC} = 2.0V			280	ns	3,4
		V_{CC} = 5V			70		
SCLK to Output High-Z	t_{CCZ}	V_{CC} = 2.0V			280	ns	3,4
		V_{CC} = 5V			70		

Figure 10. TIMING DIAGRAM: 3-WIRE READ DATA TRANSFER

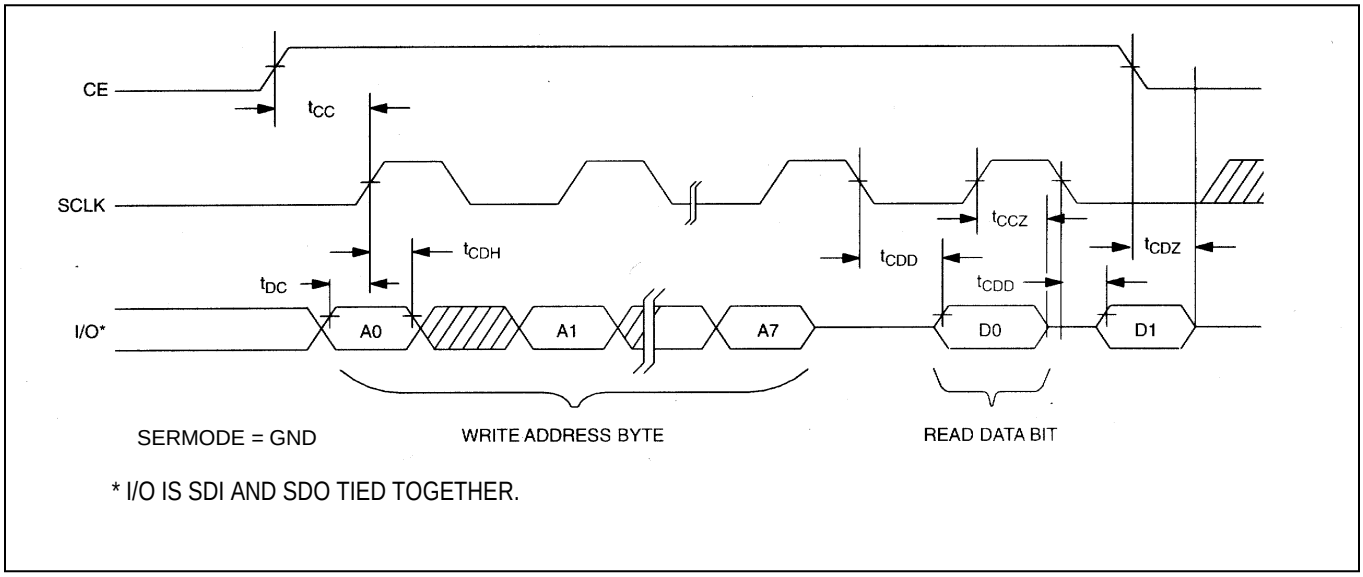

Figure 11. TIMING DIAGRAM: 3-WIRE WRITE DATA TRANSFER

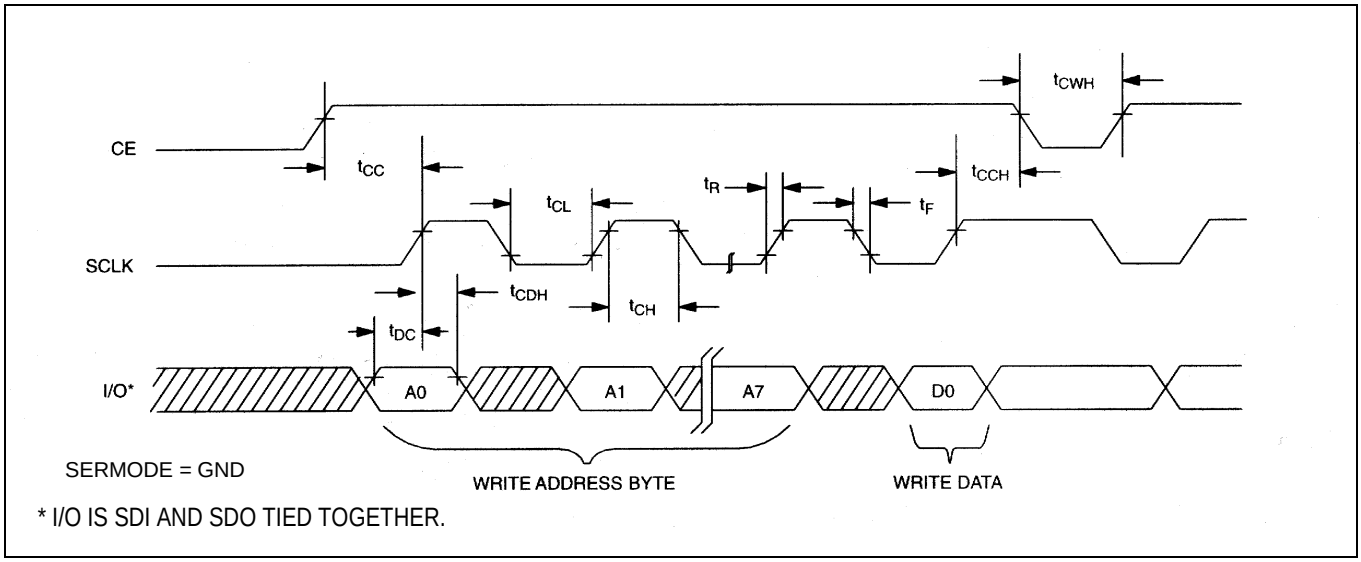

SPI AC ELECTRICAL CHARACTERISTICS

(Over the operating range, unless otherwise specified.) (Figure 12 and Figure 13)

PARAMETER	SYMBOL		MIN	TYP	MAX	UNITS	NOTES
Data to CLK Setup	t_{DC}	V_{CC} = 2.0V	200			ns	5,6
		V_{CC} = 5V	50				
CLK to Data Hold	t_{CDH}	V_{CC} = 2.0V	280			ns	5,6
		V_{CC} = 5V	70				
CLK to Data Delay	t_{CDD}	V_{CC} = 2.0V			800	ns	5,6,7
		V_{CC} = 5V			200		
CLK Low Time	t_{CL}	V_{CC} = 2.0V	1000			ns	6
		V_{CC} = 5V	250				
CLK High Time	t_{CH}	V_{CC} = 2.0V	1000			ns	6
		V_{CC} = 5V	250				
CLK Frequency	t_{CLK}	V_{CC} = 2.0V			0.6	MHz	6
		V_{CC} = 5V	DC		2.0		
CLK Rise and Fall	t_R, t_F	V_{CC} = 2.0V			2000	ns	
		V_{CC} = 5V			500		
CE to CLK Setup	t_{CC}	V_{CC} = 2.0V	4			µs	6
		V_{CC} = 5V	1				
CLK to CE Hold	t_{CCH}	V_{CC} = 2.0V	240			ns	6
		V_{CC} = 5V	60				
CE Inactive Time	t_{CWH}	V_{CC} = 2.0V	4			µs	6
		V_{CC} = 5V	1				
CE to Output High-Z	t_{CDZ}	V_{CC} = 2.0V			280	ns	5,6
		V_{CC} = 5V			70		

Figure 12. TIMING DIAGRAM: SPI READ DATA TRANSFER

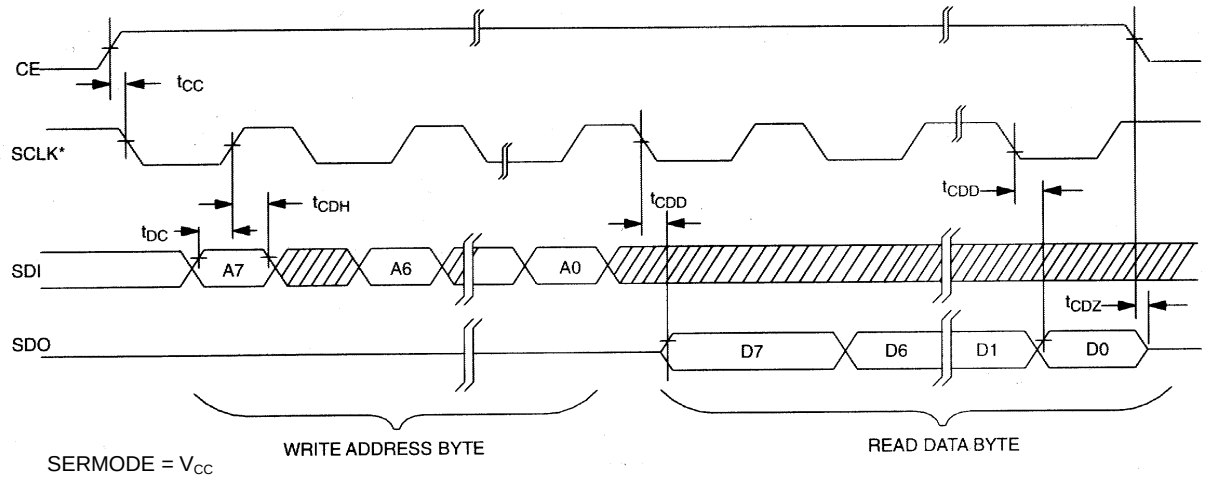

* SCLK CAN BE EITHER POLARITY, TIMING SHOWN FOR CPOL = 1.

Figure 13. TIMING DIAGRAM: SPI WRITE DATA TRANSFER

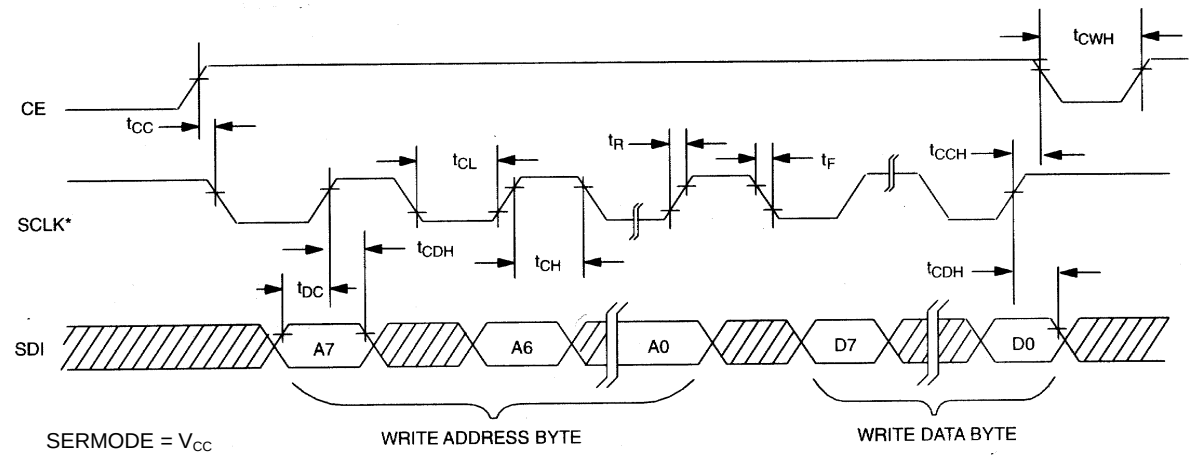

* SCLK CAN BE EITHER POLARITY, TIMING SHOWN FOR CPOL = 1.

NOTES:

1) I_{CC1T} and I_{CC2T} are specified with CE set to a logic 0 and $\overline{EOSC}$ bit = 0 (oscillator enabled).
2) I_{CC1A} and I_{CC2A} are specified with CE = V_{CC}, SCLK=2MHz at V_{CC} = 5V; SCLK = 500kHz at V_{CC} = 2.0V, V_{IL} = 0V, V_{IH} = V_{CC}, and $\overline{EOSC}$ bit = 0 (oscillator enabled).
3) Measured at V_{IH} = 2.0V or V_{IL} = 0.8V and 10ms maximum rise and fall time.
4) Measured with 50pF load.
5) Measured at V_{OH} = 2.4V or V_{OL} = 0.4V.
6) I_{CC1S} and I_{CC2S} are specified with CE set to a logic 0. The $\overline{EOSC}$ bit must be set to logic 1 (oscillator disabled).
7) V_{CC} = V_{CC1}, when V_{CC1} > V_{CC2} + 0.2V (typical); V_{CC} = V_{CC2}, when V_{CC2} > V_{CC1}.
8) V_{CC2} = 0V.
9) V_{CC1} = 0V.
10) V_{CC1} < $V_{BAT.}$
11) V_{CCIF} must be less than or equal to the largest of V_{CC1}, V_{CC2}, and V_{BAT}.
12) Using a crystal on X1 and X2, rated for 6pF load.

REVISION HISTORY

REVISION DATE	DESCRIPTION	PAGES CHANGED
12/09	Added *Table 1. Crystal Specifications* to the *Clock Accuracy* section.	5
	Added "SERMODE = V_{CC}" to Figures 6, 7, 12, and 13.	12, 20
	Added "SERMODE = GND" to Figures 9, 10, and 11.	14, 18
	Removed the "Crystal Capacitance" parameter from the *Capacitance* table.	16
4/15	Revised *Benefits and Features* section	1

Maxim cannot assume responsibility for use of any circuitry other than circuitry entirely embodied in a Maxim product. No circuit patent licenses are implied. Maxim reserves the right to change the circuitry and specifications without notice at any time.

Maxim Integrated Products, 160 Rio Robles, San Jose, CA 95134 408-601-1000

© 2015 Maxim Integrated Products Maxim is a registered trademark of Maxim Integrated Products, Inc.

OCEAN CHIPS
Океан Электроники
Поставка электронных компонентов

Компания «Океан Электроники» предлагает заключение долгосрочных отношений при поставках импортных электронных компонентов на взаимовыгодных условиях!

Наши преимущества:

- Поставка оригинальных импортных электронных компонентов напрямую с производств Америки, Европы и Азии, а так же с крупнейших складов мира;
- Широкая линейка поставок активных и пассивных импортных электронных компонентов (более 30 млн. наименований);
- Поставка сложных, дефицитных, либо снятых с производства позиций;
- Оперативные сроки поставки под заказ (от 5 рабочих дней);
- Экспресс доставка в любую точку России;
- Помощь Конструкторского Отдела и консультации квалифицированных инженеров;
- Техническая поддержка проекта, помощь в подборе аналогов, поставка прототипов;
- Поставка электронных компонентов под контролем ВП;
- Система менеджмента качества сертифицирована по Международному стандарту ISO 9001;
- При необходимости вся продукция военного и аэрокосмического назначения проходит испытания и сертификацию в лаборатории (по согласованию с заказчиком);
- Поставка специализированных компонентов военного и аэрокосмического уровня качества (Xilinx, Altera, Analog Devices, Intersil, Interpoint, Microsemi, Actel, Aeroflex, Peregrine, VPT, Syfer, Eurofarad, Texas Instruments, MS Kennedy, Miteq, Cobham, E2V, MA-COM, Hittite, Mini-Circuits, General Dynamics и др.);

Компания «Океан Электроники» является официальным дистрибьютором и эксклюзивным представителем в России одного из крупнейших производителей разъемов военного и аэрокосмического назначения **«JONHON»**, а так же официальным дистрибьютором и эксклюзивным представителем в России производителя высокотехнологичных и надежных решений для передачи СВЧ сигналов **«FORSTAR»**.

AVIC JONHON

«JONHON» (основан в 1970 г.)

Разъемы специального, военного и аэрокосмического назначения:

(Применяются в военной, авиационной, аэрокосмической, морской, железнодорожной, горно- и нефтедобывающей отраслях промышленности)

«FORSTAR» (основан в 1998 г.)

ВЧ соединители, коаксиальные кабели, кабельные сборки и микроволновые компоненты:

(Применяются в телекоммуникациях гражданского и специального назначения, в средствах связи, РЛС, а так же военной, авиационной и аэрокосмической отраслях промышленности).

FORSTAR®

Телефон: 8 (812) 309-75-97 (многоканальный)
Факс: 8 (812) 320-03-32
Электронная почта: ocean@oceanchips.ru
Web: http://oceanchips.ru/
Адрес: 198099, г. Санкт-Петербург, ул. Калинина, д. 2, корп. 4, лит. А