Honeywell

TruStability® Board Mount Pressure Sensors

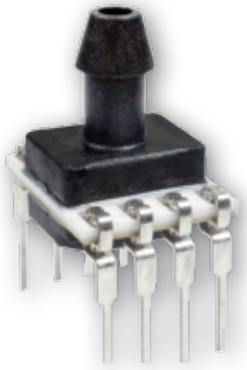

HSC Series—High Accuracy, Compensated/Amplified

±1.6 mbar to ±10 bar | ±160 Pa to ±1 MPa | ±0.5 inH_2O to ±150 psi

Digital or Analog Output

Datasheet

TruStability® Board Mount Pressure Sensors

The TruStability® High Accuracy Silicon Ceramic (HSC) Series is a piezoresistive silicon pressure sensor offering a ratiometric analog or digital output for reading pressure over the specified full scale pressure span and temperature range.

The HSC Series is fully calibrated and temperature compensated for sensor offset, sensitivity, temperature effects, and non-linearity using an on-board Application Specific Integrated Circuit (ASIC). Calibrated output values for pressure are updated at approximately 1 kHz for analog and 2 kHz for digital.

The HSC Series is calibrated over the temperature range of 0 °C to 50 °C [32 °F to 122 °F]. The sensor is characterized for operation from a single power supply of either 3.3 Vdc or 5.0 Vdc.

These sensors measure absolute, gage, or differential pressures. The absolute versions have an internal vacuum reference and an output value proportional to absolute pressure. Gage versions are referenced to atmospheric pressure and provide an output proportional to pressure variations from atmosphere. Differential versions allow measurement of pressure between the two pressure ports.

The TruStability® pressure sensors are intended for use with non-corrosive, non-ionic gases, such as air and other dry gases. Available options extend the performance of these sensors to non-corrosive, non-ionic liquids for pressure ranges above 40 mbar | 4 kPa | 20 inH_2O.

All products are designed and manufactured according to ISO 9001 standards.

Table of Contents

Features and Benefits 3-5

Potential Applications 6

General Specifications 7-8

Analog Operating Specifications 9

Digital Operating Specifications 10

Transfer Function Limits 11

Total Error Band Values 12

Nomenclature and Order Guide 13

Pressure Range Specifications

- ±1.6 mbar to ±10 bar 14
- ±160 Pa to ±1 MPa 15
- ±0.5 inH_2O to ±150 psi 16

Available Standard Configurations 17-18

Dimensional Drawings

- DIP Packages 19-21
- SMT Packages 21-24
- SIP Packages 24-29

Pinouts, PCB Layouts 30

TruStability® Board Mount Pressure Sensors

Portfolio Overview 31

Additional Information 32

What makes our sensors better?

- Stability and reliability
- Industry-leading accuracy of ±0.25 %FSS BFSL
- Port and housing options simplify integration
- Wide pressure range, from ±1.6 mbar to ±10 bar | ±160 Pa to ±1 MPa | ±0.5 inH_2O to ±150 psi
- Small package size
- Extremely low power consumption

STABILITY • ACCURACY • FLEXIBILITY • SMALL SIZE

Features and Benefits

PROPRIETARY HONEYWELL TECHNOLOGY

Combines high sensitivity with high overpressure and burst pressure while providing industry leading stability—performance factors that are difficult to achieve in the same product; this gives the customer more flexibility in sensor implementation and reduces the customer design requirements for protecting the sensor without sacrificing the ability to sense very small changes in pressure.

PROTECTED BY MULTIPLE GLOBAL PATENTS

INDUSTRY-LEADING LONG-TERM STABILITY

Even after long-term use and thermal extremes, the sensor's stability remains best in class:

- Minimizes system calibration needs.
- Improves system performance.
- Helps support system uptime by minimizing the need to service or replace the sensor during its application life.

TOTAL ERROR BAND (TEB)

Honeywell specifies TEB—the most comprehensive, clear, and meaningful measurement—that provides the sensor's true performance over a compensated range of 0 °C to 50 °C [32 °F to 122 °F] (see Figure 1):

- Minimizes individually testing and calibrating every sensor, decreasing manufacturing time and process costs.
- Improves system accuracy.
- Provides enhanced sensor interchangeability—there is minimal part-to-part variation in accuracy.

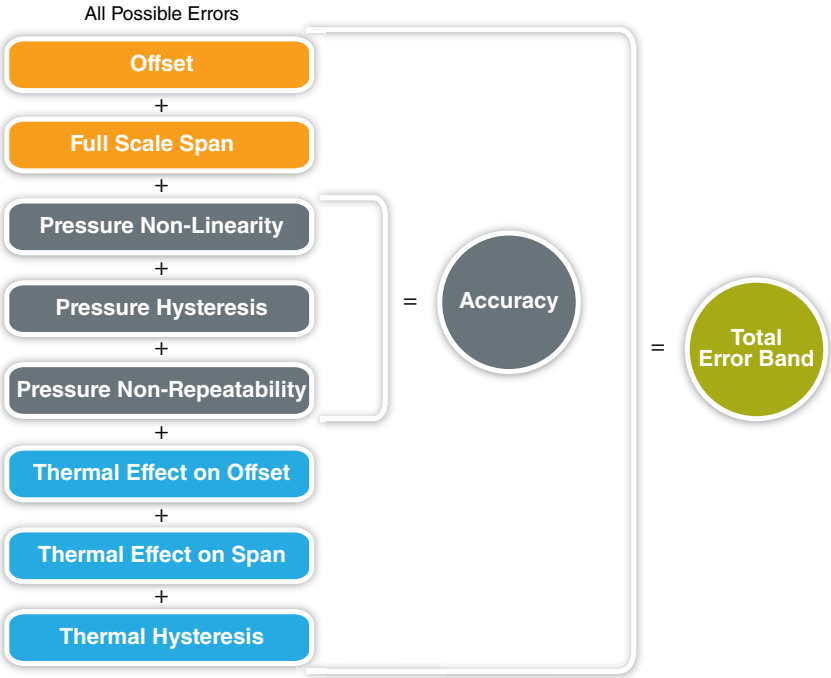

Figure 1. TEB Components for TruStability® Board Mount Pressure Sensors

Features and Benefits

INDUSTRY-LEADING ACCURACY

Extremely tight accuracy of ±0.25 %FSS BFSL (Full Scale Span Best Fit Straight Line) reduces software needed to correct system inaccuracies, minimizing system design time:

- Avoids additional customer calibration.
- Helps to improve system efficiency.
- Often simplifies software development.

HIGH BURST PRESSURES

- Promotes system reliability and reduces potential system downtime.
- Can simplify the design process.

HIGH WORKING PRESSURE RANGES

Allows ultra-low pressure sensors to be used continuously well above the calibrated pressure range.

INDUSTRY-LEADING FLEXIBILITY

Modular, flexible design with many package styles (with the same industry-leading stability), pressure ports, and options simplify integration into the device manufacturer's application.

WIDE VARIETY OF PRESSURE RANGES

From ±1.6 mbar to ±10 bar | ±160 Pa to ±1 MPa | ±0.5 inH_2O to 150 psi provide support for many unique applications.

MEETS IPC/JEDEC J-STD-020D.1 MOISTURE SENSITIVITY LEVEL 1 REQUIREMENTS

- Allows the customer to avoid the thermal and mechanical damage during solder reflow attachment and/or repair that lesser rated products would incur.
- Allows unlimited floor life when stored as specified (≤30 ºC/85 %RH), simplifying storage and reducing scrap.
- Never requires lengthy bakes prior to reflow.
- Stable and usable shortly after reflow process allows for lean manufacturing.

OPTIONAL INTERNAL DIAGNOSTIC FUNCTIONS

- May reduce the need for redundant sensors in the system.
- Detects most internal failures including burst sensors.

ENERGY EFFICIENT

Extremely low power consumption (less than 10 mW, typ.):

- Reduces system power requirements.
- Enables extended battery life.
- Optional sleep mode available upon special request.

Features and Benefits

OUTPUT: RATIOMETRIC ANALOG; I²C- OR SPI-COMPATIBLE 14-BIT DIGITAL OUTPUT (MIN. 12-BIT SENSOR RESOLUTION)

Accelerates performance through reduced conversion requirements and the convenience of direct interface to microprocessors.

SMALL SIZE

Miniature 10 mm x 10 mm [0.39 in x 0.39 in] package is very small when compared to many board mount pressure sensors:

- Occupies less area on the PCB.
- Typically allows for easy placement on crowded PCBs or in small devices.

REACH AND ROHS COMPLIANT

LIQUID MEDIA OPTION

- Provides robustness in environments with condensing humidity.
- Compatible with a variety of non-ionic fluids.
- Available for pressure ranges above 40 mbar | 4 kPa | 20 in$H_2$0.

Potential Applications

MEDICAL

- AIRFLOW MONITORS
- ANESTHESIA MACHINES
- BLOOD ANALYSIS MACHINES
- GAS CHROMATOGRAPHY
- GAS FLOW INSTRUMENTATION
- KIDNEY DIALYSIS MACHINES
- OXYGEN CONCENTRATORS
- PNEUMATIC CONTROLS
- RESPIRATORY MACHINES
- SLEEP APNEA EQUIPMENT
- VENTILATORS
- SPIROMETERS
- NEBULIZERS
- HOSPITAL ROOM AIR PRESSURE

INDUSTRIAL

- BAROMETRY
- FLOW CALIBRATORS
- GAS CHROMATOGRAPHY
- GAS FLOW INSTRUMENTATION
- HVAC
- LIFE SCIENCES
- PNEUMATIC CONTROL
- VAV (VARIABLE AIR VOLUME) CONTROL
- CLOGGED HVAC FILTER DETECTION
- HVAC TRANSMITTERS
- INDOOR AIR QUALITY

General Specifications

Table 1. Absolute Maximum Ratings[1]

Characteristic	Min.	Max.	Unit
Supply voltage (V_{supply})	-0.3	6.0	Vdc
Voltage on any pin	-0.3	V_{supply} + 0.3	V
Digital interface clock frequency: I^2C SPI	 100 50	 400 800	kHz
ESD susceptibility (human body model)	3	—	kV
Storage temperature	-40 [-40]	85 [185]	°C [°F]
Soldering time and temperature: lead solder temperature (SIP, DIP) peak reflow temperature (SMT)	 4 s max. at 250 °C [482 °F] 15 s max. at 250 °C [482 °F]		

[1]Absolute maximum ratings are the extreme limits the device will withstand without damage.

Table 2. Environmental Specifications

Characteristic	Parameter
Humidity: gases only (See “Options N and D” in Figure 4.) liquid media (See “Options T and V” in Figure 4.)	 0% to 95% RH, non-condensing 100% condensing or direct liquid media on Port 1
Vibration	MIL-STD-202G, Method 204D, Condition B (15 g, 10 Hz to 2 Hz)
Shock	MIL-STD-202G, Method 213B, Condition C (100 g, 6 ms duration)
Life[1]	1 million pressure cycles minimum
Solder reflow	J-STD-020-D.1 Moisture Sensitivity Level 1 (unlimited shelf life when stored at ≤30 °C/85 % RH)

[1]Life may vary depending on specific application in which the sensor is utilized.

General Specifications

Table 3. Wetted Materials[1]

Component	Port 1 (Pressure Port)	Port 2 (Reference Port)
Ports and covers	high temperature polyamide	high temperature polyamide
Substrate	alumina ceramic	alumina ceramic
Adhesives	epoxy, silicone	epoxy, silicone
Electronic components	ceramic, silicon, glass, solder	silicon, glass, gold

[1]Contact Honeywell Customer Service for detailed material information.

CAUTION

PRODUCT DAMAGE FOR SENSORS WITH LIQUID MEDIA OPTION (ONLY AVAILABLE 60 MBAR | 6 KPA | 1 PSI AND ABOVE)

- Ensure liquid media is applied to Port 1 only; Port 2 is not compatible with liquids.
- Ensure liquid media contains no particulates. All TruStability® sensors are dead-ended devices. Particulates can accumulate inside the sensor, causing damage or affecting sensor output.
- Recommend that the sensor be positioned with Port 1 facing downwards; any particulates in the system are less likely to enter and settle within the pressure sensor if it is in this position.
- Ensure liquid media does not create a residue when dried; build-up inside the sensor may affect sensor output. Rinsing of a dead-ended sensor is difficult and has limited effectiveness for removing residue.
- Ensure liquid media are compatible with wetted materials. Non-compatible liquid media will degrade sensor performance and may lead to sensor failure.

Failure to comply with these instructions may result in product damage.

Table 4. Sensor Pressure Types

Pressure Type	Description
Absolute	Output is proportional to the difference between applied pressure and a built-in vacuum reference.
Differential	Output is proportional to the difference between the pressures applied to each port (Port 1 – Port 2).
Gage	Output is proportional to the difference between applied pressure and atmospheric (ambient) pressure.

Analog Operating Specifications

Table 5. Analog Operating Specifications

Characteristic	Min.	Typ.	Max.	Unit
Supply voltage (V_{supply}):[1, 2, 3]				
pressure ranges ≥60 mbar | 6 kPa | 1 psi:				
3.3 Vdc	3.0	3.3	3.6	Vdc
5.0 Vdc	4.75	5.0	5.25	
pressure ranges ≤40 mbar | 4 kPa | 20 inH_2O:				
3.3 Vdc	3.27	3.3	3.33	
5.0 Vdc	4.95	5.0	5.05	
Supply current:				
3.3 Vdc	—	2.1	2.8	mA
5.0 Vdc	—	2.7	3.5	
Operating temperature range[4]	-20 [-4]	—	85 [185]	°C [°F]
Compensated temperature range[5]	0 [-32]	—	50 [122]	°C [°F]
Startup time (power up to data ready)	—	—	5	ms
Response time	—	1	—	ms
Clipping limit:				
upper	—	—	97.5	%Vsupply
lower	2.5	—	—	
Accuracy[6]	—	—	±0.25	%FSS BFSL[8]
Output resolution	0.03	—	—	%FSS
Orientation sensitivity (±1 g):[7, 9]				
pressure ranges ≤40 mbar | 4 kPa | 20 inH_2O	—	±0.1	—	%FSS[8]
pressure ranges ≤2.5 mbar | 250 Pa | 1 inH_2O	—	±0.2	—	

[1]Sensors are either 3.3 Vdc or 5.0 Vdc based on the catalog listing selected.

[2]Ratiometricity of the sensor (the ability of the device output to scale to the supply voltage) is achieved within the specified operating voltage.

[3]The sensor is not reverse polarity protected. Incorrect application of supply voltage or ground to the wrong pin may cause electrical failure.

[4]Operating temperature range: The temperature range over which the sensor will produce an output proportional to pressure.

[5]Compensated temperature range: The temperature range over which the sensor will produce an output proportional to pressure within the specified performance limits.

[6]Accuracy: The maximum deviation in output from a Best Fit Straight Line (BFSL) fitted to the output measured over the pressure range at 25 °C [77 °F]. Includes all errors due to pressure non-linearity, pressure hysteresis, and non-repeatability.

[7]Orientation sensitivity: The maximum change in offset of the sensor due to a change in position or orientation relative to Earth's gravitational field.

[8]Full Scale Span (FSS): The algebraic difference between the output signal measured at the maximum (Pmax.) and minimum (Pmin.) limits of the pressure range. (See Figure 4 for ranges.)

[9]Insignificant for pressure ranges above 40 mbar | 4 kPa | 20 inH_2O.

Digital Operating Specifications

Table 6. Digital Operating Specifications

Characteristic	Min.	Typ.	Max.	Unit
Supply voltage (V_{supply}):[1, 2, 3]				
pressure ranges ≥60 mbar | 6 kPa | 1 psi:				
3.3 Vdc	3.0	3.3	3.6	
5.0 Vdc	4.75	5.0	5.25	Vdc
pressure ranges ≤40 mbar | 4 kPa | 20 inH_2O:				
3.3 Vdc	3.27	3.3	3.33	
5.0 Vdc	4.95	5.0	5.05	
Supply current:				
3.3 Vdc	—	3.1	3.9	mA
5.0 Vdc	—	3.7	4.6	
Operating temperature range[4]	-20 [-4]	—	85 [185]	°C [°F]
Compensated temperature range[5]	0 [-32]	—	50 [122]	°C [°F]
Startup time (power up to data ready)	—	—	3	ms
Response time	—	0.46	—	ms
SPI/I^2C voltage level:				
low	—	—	20	%Vsupply
high	80	—	—	
Pull up on SDA/MISO, SCL/SCLK, SS	1	—	—	kOhm
Accuracy[6]	—	—	±0.25	%FSS BFSL[8]
Output resolution	12	—	—	bits
Orientation sensitivity (±1 g):[7, 9]				
pressure ranges ≤40 mbar | 4 kPa | 20 inH_2O	—	±0.1	—	%FSS[8]
pressure ranges ≤2.5 mbar | 250 Pa | 1 inH_2O	—	±0.2	—	

[1]Sensors are either 3.3 Vdc or 5.0 Vdc based on the catalog listing selected.

[2]Ratiometricity of the sensor (the ability of the device output to scale to the supply voltage) is achieved within the specified operating voltage.

[3]The sensor is not reverse polarity protected. Incorrect application of supply voltage or ground to the wrong pin may cause electrical failure.

[4]Operating temperature range: The temperature range over which the sensor will produce an output proportional to pressure.

[5]Compensated temperature range: The temperature range over which the sensor will produce an output proportional to pressure within the specified performance limits.

[6]Accuracy: The maximum deviation in output from a Best Fit Straight Line (BFSL) fitted to the output measured over the pressure range at 25 °C [77 °F]. Includes all errors due to pressure non-linearity, pressure hysteresis, and non-repeatability.

[7]Orientation sensitivity: The maximum change in offset of the sensor due to a change in position or orientation relative to Earth's gravitational field.

[8]Full Scale Span (FSS): The algebraic difference between the output signal measured at the maximum (Pmax.) and minimum (Pmin.) limits of the pressure range. (See Figure 4 for ranges.)

[9]Insignificant for pressure ranges above 40 mbar | 4 kPa | 20 inH_2O.

Table 7. Sensor Output at Significant Percentages (Digital Versions Only)

% Output	Digital Counts (decimal)	Digital Counts (hex)
0	0	0x0000
10	1638	0x0666
50	8192	0x2000
90	14746	0x399A
100	16383	0x3FFF

Transfer Function Limits

Figure 2. Transfer Function Limits[1]

Analog Versions

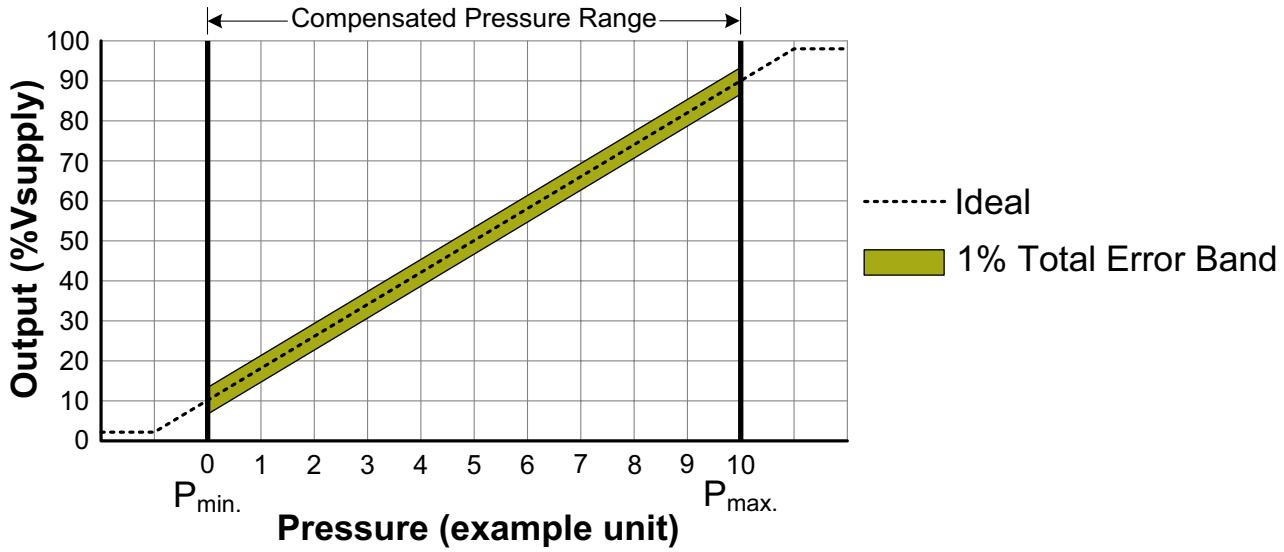

$$\text{Output (V)} = \frac{0.8 \times \text{Vsupply}}{P_{max.} - P_{min.}} \times (\text{Pressure}_{applied} - P_{min.}) + 0.10 \times \text{Vsupply}$$

Digital Versions

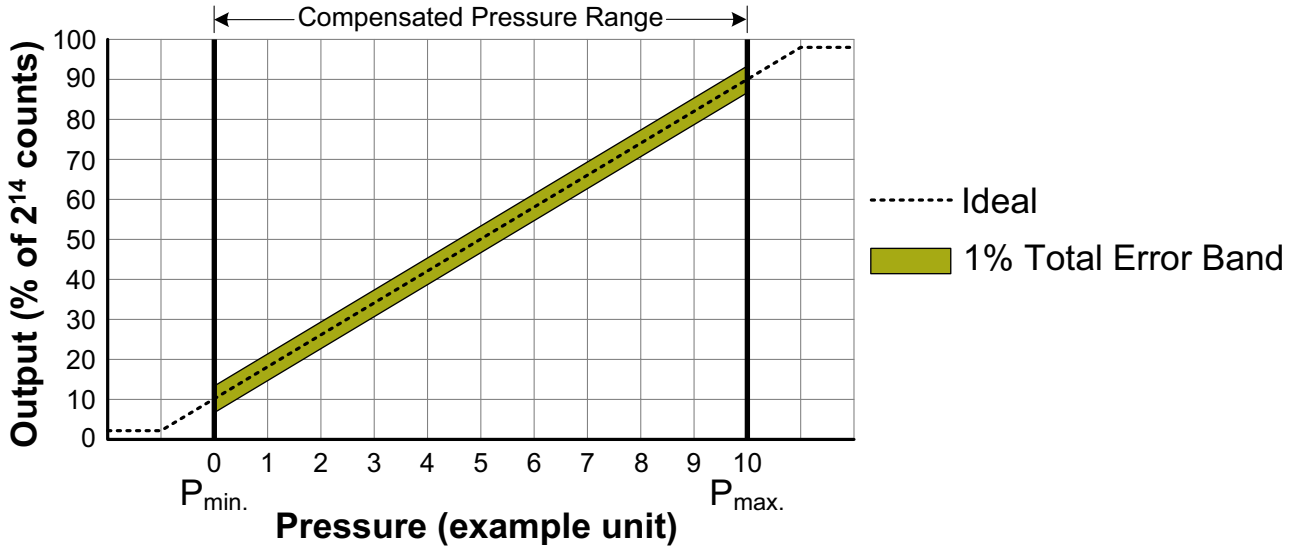

$$\text{Output (\% of } 2^{14} \text{ counts)} = \frac{80\%}{P_{max.} - P_{min.}} \times (\text{Pressure}_{applied} - P_{min.}) + 10\%$$

[1]Transfer Function "A" is shown. See Figure 4 for other available transfer function options.

Total Error Band Values

Figure 3. Total Error Band Values for Full Scale Span Pressure Ranges

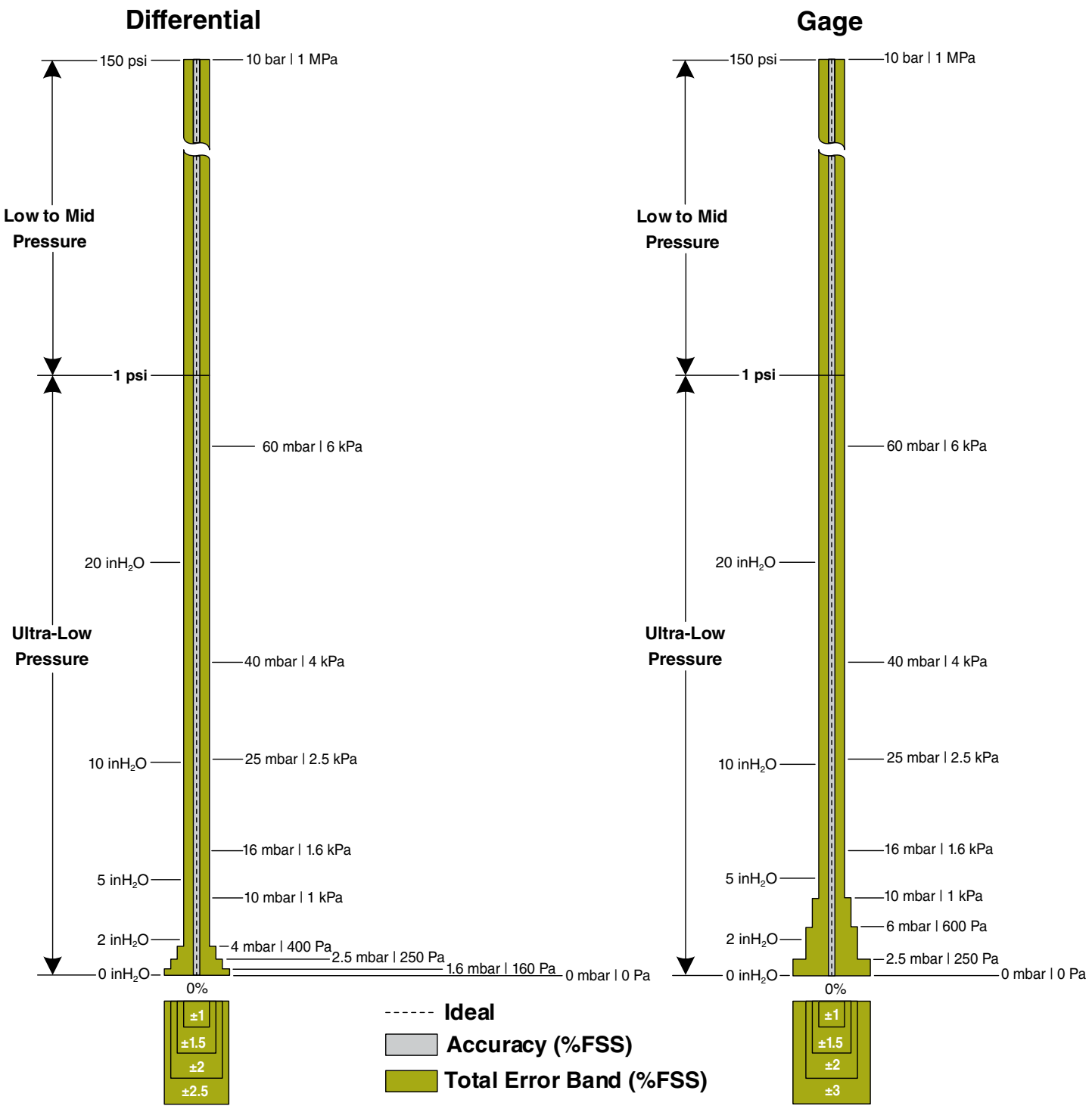

Nomenclature and Order Guide

Figure 4. Nomenclature and Order Guide

For example, **HSCDNNN150PGAA3** defines an HSC Series TruStability® Pressure Sensor, DIP package, NN pressure port, no special options,150 psi gage pressure range, analog output type, 10% to 90% of Vsupply transfer function, 3.3 Vdc supply voltage.

H S C D N N N 1 5 0 P G A A 3

Product Series

HSC	High Accuracy, Compensated/Amplified

Package

D	DIP (Dual Inline Pin)
M	SMT (Surface Mount Technology)
S	SIP (Single Inline Pin)

Pressure Port

DIP		SMT		SIP	
NN	No ports	**NN**	No ports	**NN**	No ports
—		—		**AA**	Dual axial barbed ports, opposite sides
AN	Single axial barbed port	**AN**	Single axial barbed port	**AN**	Single axial barbed port
LN	Single axial barbless port	**LN**	Single axial barbless port	**LN**	Single axial barbless port
—		—		**FF**	Fastener mount, dual axial barbed ports, opposite sides
—		—		**FN**	Fastener mount, single axial barbed port
—		—		**GN**	Ribbed fastener mount, single axial barbed port
—		—		**NB**	Fastener mount, dual axial ports, same side
RN	Single radial barbed port	**RN**	Single radial barbed port	**RN**	Single radial barbed port
RR	Dual radial barbed ports, same side	**RR**	Dual radial barbed ports, same side	**RR**	Dual radial barbed ports, same side
DR	Dual radial barbed ports, opposite sides	**DR**	Dual radial barbed ports, opposite sides	**DR**	Dual radial barbed ports, opposite sides
JN	Single radial barbless port	**JN**	Single radial barbless port	**JN**	Single radial barbless port
JJ	Dual radial barbless ports, same side	**JJ**	Dual radial barbless ports, same side	**JJ**	Dual radial barbless ports, same side
—		—		**HH**	Fastener mount, dual radial barbed ports, same side
—		—		**HN**	Fastener mount, single radial barbed port
—		—		**MN**	Manifold mount, outer diameter seal
—		—		**SN**	Manifold mount, inner diameter seal

Options[5, 6]

N	Dry gases only, no diagnostics
D	Dry gases only, diagnostics on
T	Liquid media on Port 1, no diagnostics
V	Liquid media on Port 1, diagnostics on

Supply Voltage

3	3.3 Vdc
5	5.0 Vdc

Transfer Function[1]

A	10% to 90% of Vsupply (analog), 2^{14} counts (digital)
B	5% to 95% of Vsupply (analog), 2^{14} counts (digital)
C	5% to 85% of Vsupply (analog), 2^{14} counts (digital)
F	4% to 94% of Vsupply (analog), 2^{14} counts (digital)

Output Type[2]

A	Analog	**4**	I²C, Address 0x48
S	SPI	**5**	I²C, Address 0x58
2	I²C, Address 0x28	**6**	I²C, Address 0x68
3	I²C, Address 0x38	**7**	I²C, Address 0x78

Pressure Range[3, 4]

±1.6 mbar to ±10 bar		±160 Pa to ±1 MPa		±0.5 inH$_2$O to ±150 psi	
Absolute		*Absolute*		*Absolute*	
001BA	0 bar to 1 bar	**100KA**	0 kPa to 100 kPa	**015PA**	0 psi to 15 psi
1.6BA	0 bar to 1.6 bar	**160KA**	0 kPa to 160 kPa	**030PA**	0 psi to 30 psi
2.5BA	0 bar to 2.5 bar	**250KA**	0 kPa to 250 kPa	**060PA**	0 psi to 60 psi
004BA	0 bar to 4 bar	**400KA**	0 kPa to 400 kPa	**100PA**	0 psi to 100 psi
006BA	0 bar to 6 bar	**600KA**	0 kPa to 600 kPa	**150PA**	0 psi to 150 psi
010BA	0 bar to 10 bar	**001GA**	0 kPa to 1 MPa		
Differential		*Differential*		*Differential*	
1.6MD	±1.6 mbar	**160LD**	±160 Pa	**0.5ND**	±0.5 inH$_2$O
2.5MD	±2.5 mbar	**250LD**	±250 Pa	**001ND**	±1 inH$_2$O
004MD	±4 mbar	**400LD**	±400 Pa	**002ND**	±2 inH$_2$O
006MD	±6 mbar	**600LD**	±600 Pa	**004ND**	±4 inH$_2$O
010MD	±10 mbar	**001KD**	±1 kPa	**005ND**	±5 inH$_2$O
016MD	±16 mbar	**1.6KD**	±1.6 kPa	**010ND**	±10 inH$_2$O
025MD	±25 mbar	**2.5KD**	±2.5 kPa	**020ND**	±20 inH$_2$O
040MD	±40 mbar	**004KD**	±4 kPa	**030ND**	±30 inH$_2$O
060MD	±60 mbar	**006KD**	±6 kPa	**001PD**	±1 psi
100MD	±100 mbar	**010KD**	±10 kPa	**005PD**	±5 psi
160MD	±160 mbar	**016KD**	±16 kPa	**015PD**	±15 psi
250MD	±250 mbar	**025KD**	±25 kPa	**030PD**	±30 psi
400MD	±400 mbar	**040KD**	±40 kPa	**060PD**	±60 psi
600MD	±600 mbar	**060KD**	±60 kPa		
001BD	±1 bar	**100KD**	±100 kPa		
1.6BD	±1.6 bar	**160KD**	±160 kPa		
2.5BD	±2.5 bar	**250KD**	±250 kPa		
004BD	±4 bar	**400KD**	±400 kPa		
Gage		*Gage*		*Gage*	
2.5MG	0 mbar to 2.5 mbar	**250LG**	0 Pa to 250 Pa	**001NG**	0 inH$_2$O to 1 inH$_2$O
004MG	0 mbar to 4 mbar	**400LG**	0 Pa to 400 Pa	**002NG**	0 inH$_2$O to 2 inH$_2$O
006MG	0 mbar to 6 mbar	**600LG**	0 Pa to 600 Pa	**004NG**	0 inH$_2$O to 4 inH$_2$O
010MG	0 mbar to 10 mbar	**001KG**	0 kPa to 1 kPa	**005NG**	0 inH$_2$O to 5 inH$_2$O
016MG	0 mbar to 16 mbar	**1.6KG**	0 kPa to 1.6 kPa	**010NG**	0 inH$_2$O to 10 inH$_2$O
025MG	0 mbar to 25 mbar	**2.5KG**	0 kPa to 2.5 kPa	**020NG**	0 inH$_2$O to 20 inH$_2$O
040MG	0 mbar to 40 mbar	**004KG**	0 kPa to 4 kPa	**030NG**	0 inH$_2$O to 30 inH$_2$O
060MG	0 mbar to 60 mbar	**006KG**	0 kPa to 6 kPa	**001PG**	0 psi to 1 psi
100MG	0 mbar to 100 mbar	**010KG**	0 kPa to 10 kPa	**005PG**	0 psi to 5 psi
160MG	0 mbar to 160 mbar	**016KG**	0 kPa to 16 kPa	**015PG**	0 psi to 15 psi
250MG	0 mbar to 250 mbar	**025KG**	0 kPa to 25 kPa	**030PG**	0 psi to 30 psi
400MG	0 bar to 400 mbar	**040KG**	0 kPa to 40 kPa	**060PG**	0 psi to 60 psi
600MG	0 bar to 600 mbar	**060KG**	0 kPa to 60 kPa	**100PG**	0 psi to 100 psi
001BG	0 bar to 1 bar	**100KG**	0 kPa to 100 kPa	**150PG**	0 psi to 150 psi
1.6BG	0 bar to 1.6 bar	**160KG**	0 kPa to 160 kPa		
2.5BG	0 bar to 2.5 bar	**250KG**	0 kPa to 250 kPa		
004BG	0 bar to 4 bar	**400KG**	0 kPa to 400 kPa		
006BG	0 bar to 6 bar	**600KG**	0 kPa to 600 kPa		
010BG	0 bar to 10 bar	**001GG**	0 kPa to 1 MPa		

[1]The transfer function limits define the output of the sensor at a given pressure input. By specifying Pmin. and Pmax., the output at Pmin. and Pmax., the complete transfer function of the sensor is defined. See the graphical representations of the transfer function in Figure 2. For other available transfer functions contact Honeywell Customer Service.

[2]SPI output function is not available in SIP package.

[3]Custom pressure ranges are available. Contact Honeywell Customer Service for more information.

[4]See the explanation of sensor pressure types in Table 4.

[5]See the CAUTION in this document.

[6]Options T and V are only available on pressure ranges ±60 mbar to ±10 bar | ±6 kPa to ±1 MPa | ±1 psi to ±150 psi.

Pressure Range Specifications
±1.6 mbar to ±10 bar

Table 8. Pressure Range Specifications for ±1.6 mbar to ±10 bar

Pressure Range (see Figure 4)	Pressure Range		Unit	Working Pressure[1]	Over Pressure[2]	Burst Pressure[3]	Common Mode Pressure[4]	Total Error Band[5] (%FSS)	Total Error Band after Auto-Zero[6] (%FSS)	Long-term Stability 1000 hr, 25 °C (%FSS)
	Pmin.	Pmax.								
Absolute										
001BA	0	1	bar	-	2	4	-	±1%	-	±0.25%
1.6BA	0	1.6	bar	-	4	8	-	±1%	-	±0.25%
2.5BA	0	2.5	bar	-	6	8	-	±1%	-	±0.25%
004BA	0	4	bar	-	8	16	-	±1%	-	±0.25%
006BA	0	6	bar	-	17	17	-	±1%	-	±0.25%
010BA	0	10	bar	-	17	17	-	±1%	-	±0.25%
Differential										
1.6MD	-1.6	1.6	mbar	335	675	1000	3450	±2.5%	±1.75%	±0.5%
2.5MD	-2.5	2.5	mbar	335	675	1000	3450	±2%	±1.25%	±0.35%
004MD	-4	4	mbar	335	675	1000	3450	±1.5%	±0.75%	±0.35%
006MD	-6	6	mbar	335	675	1000	3450	±1%	±0.75%	±0.35%
010MD	-10	10	mbar	375	750	1250	5450	±1%	±0.5%	±0.25%
016MD	-16	16	mbar	375	750	1250	5450	±1%	±0.5%	±0.25%
025MD	-25	25	mbar	435	850	1350	10450	±1%	±0.5%	±0.25%
040MD	-40	40	mbar	435	850	1350	10450	±1%	±0.5%	±0.25%
060MD	-60	60	mbar	-	850	1000	10000	±1%	-	±0.25%
100MD	-100	100	mbar	-	1400	2500	10000	±1%	-	±0.25%
160MD	-160	160	mbar	-	1400	2500	10000	±1%	-	±0.25%
250MD	-250	250	mbar	-	1400	2500	10000	±1%	-	±0.25%
400MD	-400	400	mbar	-	2000	4000	10000	±1%	-	±0.25%
600MD	-600	600	mbar	-	2000	4000	10000	±1%	-	±0.25%
001BD	-1	1	bar	-	4	8	10	±1%	-	±0.25%
1.6BD	-1.6	1.6	bar	-	8	16	10	±1%	-	±0.25%
2.5BD	-2.5	2.5	bar	-	8	16	10	±1%	-	±0.25%
004BD	-4.0	4.0	bar	-	16	17	10	±1%	-	±0.25%
Gage										
2.5MG	0	2.5	mbar	335	675	1000	3450	±3%	±2%	±0.5%
004MG	0	4	mbar	335	675	1000	3450	±2%	±1.25%	±0.5%
006MG	0	6	mbar	335	675	1000	3450	±2%	±1%	±0.35%
010MG	0	10	mbar	335	675	1000	3450	±1.5%	±0.75%	±0.35%
016MG	0	16	mbar	335	675	1000	3450	±1%	±0.75%	±0.25%
025MG	0	25	mbar	375	750	1250	5450	±1%	±0.5%	±0.25%
040MG	0	40	mbar	375	750	1250	5450	±1%	±0.5%	±0.25%
060MG	0	60	mbar	-	850	1000	5450	±1%	±0.5%	±0.25%
100MG	0	100	mbar	-	850	1000	10000	±1%	-	±0.25%
160MG	0	160	mbar	-	850	1000	10000	±1%	-	±0.25%
250MG	0	250	mbar	-	1400	2500	10000	±1%	-	±0.25%
400MG	0	400	mbar	-	2000	4000	10000	±1%	-	±0.25%
600MG	0	600	mbar	-	2000	4000	10000	±1%	-	±0.25%
001BG	0	1	bar	-	2	4	10	±1%	-	±0.25%
1.6BG	0	1.6	bar	-	4	8	10	±1%	-	±0.25%
2.5BG	0	2.5	bar	-	8	16	10	±1%	-	±0.25%
004BG	0	4	bar	-	8	16	16	±1%	-	±0.25%
006BG	0	6	bar	-	17	17	17	±1%	-	±0.25%
010BG	0	10	bar	-	17	17	17	±1%	-	±0.25%

[1]Working pressure: The maximum pressure that may be applied to any port of the sensor in continuous use. This pressure may be outside the operating pressure range limits (Pmin. to Pmax.) in which case the sensor may not provide a valid output until presssure is returned to within the operating pressure range. Tested to 1 million cycles, minimum.

[2]Overpressure: The maximum pressure which may safely be applied to the product for it to remain in specification once pressure is returned to the operating pressure range. Exposure to higher pressures may cause permanent damage to the product. Unless otherwise specified this applies to all available pressure ports at any temperature with the operating temperature range.

[3]Burst pressure: The maximum pressure that may be applied to any port of the product without causing escape of pressure media. Product should not be expected to function after exposure to any pressure beyond the burst pressure.

[4]Common mode pressure: The maximum pressure that can be applied simultaneously to both ports of a differential pressure sensor without causing changes in specified performance.

[5]Total Error Band: The maximum deviation from the ideal transfer function over the entire compensated temperature and pressure range. Includes all errors due to offset, full scale span, pressure non-linearity, pressure hysteresis, repeatability, thermal effect on offset, thermal effect on span, and thermal hysteresis (see Figure 1).

[6]Total Error Band after Auto-Zero: The maximum deviation from the ideal transfer function over the entire compensated pressure range at a constant temperature and supply voltage for a minimum of 24 hours after an auto-zero operation. Includes all errors due to full scale span, pressure non-linearity, pressure hysteresis, and thermal effect on span.

Pressure Range Specifications
±160 Pa to ±1 MPa

Table 9. Pressure Range Specifications for ±160 Pa to ±1 MPa

Pressure Range (see Figure 4)	Pressure Range		Unit	Working Pressure[1]	Over Pressure[2]	Burst Pressure[3]	Common Mode Pressure[4]	Total Error Band[5] (%FSS)	Total Error Band after Auto-Zero[6] (%FSS)	Long-term Stability 1000 hr, 25 °C (%FSS)
	Pmin.	Pmax.								
Absolute										
100KA	0	100	kPa	-	200	400	-	±1%	-	±0.25%
160KA	0	160	kPa	-	400	800	-	±1%	-	±0.25%
250KA	0	250	kPa	-	600	800	-	±1%	-	±0.25%
400KA	0	400	kPa	-	800	1600	-	±1%	-	±0.25%
600KA	0	600	kPa	-	1700	1700	-	±1%	-	±0.25%
001GA	0	1	MPa	-	1700	1700	-	±1%	-	±0.25%
Differential										
160LD	-160	160	Pa	33500	67500	100000	345000	±2.5%	±1.75%	±0.5%
250LD	-250	250	Pa	33500	67500	100000	345000	±2%	±1.25%	±0.35%
400LD	-400	400	Pa	33500	67500	100000	345000	±1.5%	±0.75%	±0.35%
600LD	-600	600	Pa	33500	67500	100000	345000	±1%	±0.75%	±0.35%
001KD	-1	1	kPa	37.5	75	125	545	±1%	±0.5%	±0.25%
1.6KD	-1.6	1.6	kPa	37.5	75	125	545	±1%	±0.5%	±0.25%
2.5KD	-2.5	2.5	kPa	43.5	85	135	1045	±1%	±0.5%	±0.25%
004KD	-4	4	kPa	43.5	85	135	1045	±1%	±0.5%	±0.25%
006KD	-6	6	kPa	-	85	100	1000	±1%	-	±0.25%
010KD	-10	10	kPa	-	140	250	1000	±1%	-	±0.25%
016KD	-16	16	kPa	-	140	250	1000	±1%	-	±0.25%
025KD	-25	25	kPa	-	140	250	1000	±1%	-	±0.25%
040KD	-40	40	kPa	-	200	400	1000	±1%	-	±0.25%
060KD	-60	60	kPa	-	200	400	1000	±1%	-	±0.25%
100KD	-100	100	kPa	-	400	800	1000	±1%	-	±0.25%
160KD	-160	160	kPa	-	800	1600	1000	±1%	-	±0.25%
250KD	-250	250	kPa	-	800	1600	1000	±1%	-	±0.25%
400KD	-400	400	kPa	-	1600	1700	1000	±1%	-	±0.25%
Gage										
250LG	0	250	Pa	33500	67500	100000	345000	±3%	±2%	±0.5%
400LG	0	400	Pa	33500	67500	100000	345000	±2%	±1.25%	±0.5%
600LG	0	600	Pa	33500	67500	100000	345000	±2%	±1%	±0.35%
001KG	0	1	kPa	33.5	67.5	100	345	±1.5%	±0.75%	±0.35%
1.6KG	0	1.6	kPa	33.5	67.5	100	345	±1%	±0.75%	±0.25%
2.5KG	0	2.5	kPa	37.5	75	125	545	±1%	±0.5%	±0.25%
004KG	0	4	kPa	37.5	75	125	545	±1%	±0.5%	±0.25%
006KG	0	6	kPa	-	85	100	545	±1%	±0.5%	±0.25%
010KG	0	10	kPa	-	85	100	1000	±1%	-	±0.25%
016KG	0	16	kPa	-	85	100	1000	±1%	-	±0.25%
025KG	0	25	kPa	-	140	250	1000	±1%	-	±0.25%
040KG	0	40	kPa	-	200	400	1000	±1%	-	±0.25%
060KG	0	60	kPa	-	200	400	1000	±1%	-	±0.25%
100KG	0	100	kPa	-	200	400	1000	±1%	-	±0.25%
160KG	0	160	kPa	-	400	800	1000	±1%	-	±0.25%
250KG	0	250	kPa	-	800	1600	1000	±1%	-	±0.25%
400KG	0	400	kPa	-	800	1600	1600	±1%	-	±0.25%
600KG	0	600	kPa	-	1700	1700	1700	±1%	-	±0.25%
001GG	0	1	MPa	-	1.7	1.7	1.7	±1%	-	±0.25%

[1]Working pressure: The maximum pressure that may be applied to any port of the sensor in continuous use. This pressure may be outside the operating pressure range limits (Pmin. to Pmax.) in which case the sensor may not provide a valid output until presssure is returned to within the operating pressure range. Tested to 1 million cycles, minimum.

[2]Overpressure: The maximum pressure which may safely be applied to the product for it to remain in specification once pressure is returned to the operating pressure range. Exposure to higher pressures may cause permanent damage to the product. Unless otherwise specified this applies to all available pressure ports at any temperature with the operating temperature range.

[3]Burst pressure: The maximum pressure that may be applied to any port of the product without causing escape of pressure media. Product should not be expected to function after exposure to any pressure beyond the burst pressure.

[4]Common mode pressure: The maximum pressure that can be applied simultaneously to both ports of a differential pressure sensor without causing changes in specified performance.

[5]Total Error Band: The maximum deviation from the ideal transfer function over the entire compensated temperature and pressure range. Includes all errors due to offset, full scale span, pressure non-linearity, pressure hysteresis, repeatability, thermal effect on offset, thermal effect on span, and thermal hysteresis (see Figure 1).

[6]Total Error Band after Auto-Zero: The maximum deviation from the ideal transfer function over the entire compensated pressure range at a constant temperature and supply voltage for a minimum of 24 hours after an auto-zero operation. Includes all errors due to full scale span, pressure non-linearity, pressure hysteresis, and thermal effect on span.

Specifications
±0.5 inH_2O to ±150 psi

Table 10. Pressure Range Specifications for 0.5 inH_2O to 150 psi

Pressure Range (see Figure 4)	Pressure Range		Unit	Working Pressure[1]	Over Pressure[2]	Burst Pressure[3]	Common Mode Pressure[4]	Total Error Band[5] (%FSS)	Total Error Band after Auto-Zero[6] (%FSS)	Long-term Stability 1000 hr, 25 °C (%FSS)
	Pmin.	Pmax.								
Absolute										
015PA	0	15	psi	-	30	60	-	±1%	-	±0.25%
030PA	0	30	psi	-	60	120	-	±1%	-	±0.25%
060PA	0	60	psi	-	120	240	-	±1%	-	±0.25%
100PA	0	100	psi	-	250	250	-	±1%	-	±0.25%
150PA	0	150	psi	-	250	250	-	±1%	-	±0.25%
Differential										
0.5ND	-0.5	0.5	inH_2O	135	270	415	1400	±3%	±2%	±0.5%
001ND	-1	1	inH_2O	135	270	415	1400	±2%	±1.25%	±0.35%
002ND	-2	2	inH_2O	135	270	415	1400	±1%	±0.75%	±0.35%
004ND	-4	4	inH_2O	150	300	500	2200	±1%	±0.5%	±0.25%
005ND	-5	5	inH_2O	150	300	500	2200	±1%	±0.5%	±0.25%
010ND	-10	10	inH_2O	175	350	550	4200	±1%	±0.5%	±0.25%
020ND	-20	20	inH_2O	175	350	550	4200	±1%	±0.5%	±0.25%
030ND	-30	30	inH_2O	175	350	550	4200	±1%	±0.5%	±0.25%
001PD	-1	1	psi	-	10	15	150	±1%	-	±0.25%
005PD	-5	5	psi	-	30	40	150	±1%	-	±0.25%
015PD	-15	15	psi	-	60	120	150	±1%	-	±0.25%
030PD	-30	30	psi	-	120	240	150	±1%	-	±0.25%
060PD	-60	60	psi	-	250	250	250	±1%	-	±0.25%
Gage										
001NG	0	1	inH_2O	135	270	415	1400	±3%	±2%	±0.5%
002NG	0	2	inH_2O	135	270	415	1400	±2%	±1.25%	±0.35%
004NG	0	4	inH_2O	135	270	415	1400	±1.5%	±0.75%	±0.35%
005NG	0	5	inH_2O	135	270	415	1400	±1%	±0.75%	±0.25%
010NG	0	10	inH_2O	150	300	500	2200	±1%	±0.5%	±0.25%
020NG	0	20	inH_2O	175	350	550	4200	±1%	±0.5%	±0.25%
030NG	0	30	inH_2O	175	350	550	4200	±1%	±0.5%	±0.25%
001PG	0	1	psi	-	10	15	150	±1%	-	±0.25%
005PG	0	5	psi	-	30	40	150	±1%	-	±0.25%
015PG	0	15	psi	-	30	60	150	±1%	-	±0.25%
030PG	0	30	psi	-	60	120	150	±1%	-	±0.25%
060PG	0	60	psi	-	120	240	250	±1%	-	±0.25%
100PG	0	100	psi	-	250	250	250	±1%	-	±0.25%
150PG	0	150	psi	-	250	250	250	±1%	-	±0.25%

[1]Working pressure: The maximum pressure that may be applied to any port of the sensor in continuous use. This pressure may be outside the operating pressure range limits (Pmin. to Pmax.) in which case the sensor may not provide a valid output until pressure is returned to within the operating pressure range. Tested to 1 million cycles, minimum.

[2]Overpressure: The maximum pressure which may safely be applied to the product for it to remain in specification once pressure is returned to the operating pressure range. Exposure to higher pressures may cause permanent damage to the product. Unless otherwise specified this applies to all available pressure ports at any temperature with the operating temperature range.

[3]Burst pressure: The maximum pressure that may be applied to any port of the product without causing escape of pressure media. Product should not be expected to function after exposure to any pressure beyond the burst pressure.

[4]Common mode pressure: The maximum pressure that can be applied simultaneously to both ports of a differential pressure sensor without causing changes in specified performance.

[5]Total Error Band: The maximum deviation from the ideal transfer function over the entire compensated temperature and pressure range. Includes all errors due to offset, full scale span, pressure non-linearity, pressure hysteresis, repeatability, thermal effect on offset, thermal effect on span, and thermal hysteresis

[6]Total Error Band after Auto-Zero: The maximum deviation from the ideal transfer function over the entire compensated pressure range at a constant temperature and supply voltage for a minimum of 24 hours after an auto-zero operation. Includes all errors due to full scale span, pressure non-linearity, pressure hysteresis, and thermal effect on span.

Available Standard Configurations

Figure 5. All Available Standard Configurations (Dimensional drawings on pages noted below.)

Package Code	Pressure Port		
	DIP	SMT	SIP
NN	*page 19*	*page 21*	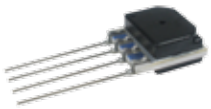 *page 24*
AA	—	—	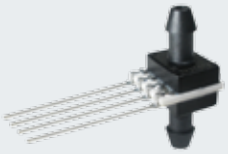 *page 24*
AN	*page 19*	*page 22*	*page 25*
LN	*page 19*	*page 22*	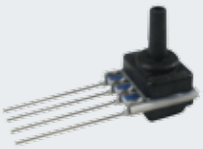 *page 25*
FF	—	—	*page 25*
FN	—	—	*page 26*
GN	—	—	*page 26*
NB	—	—	*page 26*
RN	*page 20*	*page 22*	*page 27*

Available Standard Configurations

Figure 5. All Available Standard Configurations (Continued; dimensional drawings on pages noted below.)

Package Code	Pressure Port		
	DIP	SMT	SIP
RR	*page 20*	*page 23*	*page 27*
DR	*page 20*	*page 23*	*page 27*
JN	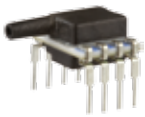 *page 21*	*page 23*	*page 28*
JJ	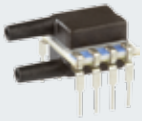 *page 21*	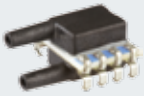 *page 24*	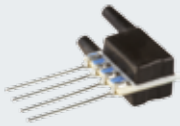 *page 28*
HH	—	—	*page 28*
HN	—	—	*page 29*
MN	—	—	*page 29*
SN	—	—	*page 29*

Dimensional Drawings
DIP Packages

Figure 6. DIP Package Dimensional Drawings (For reference only: mm [in].)

	Dimensions
DIP NN: No ports	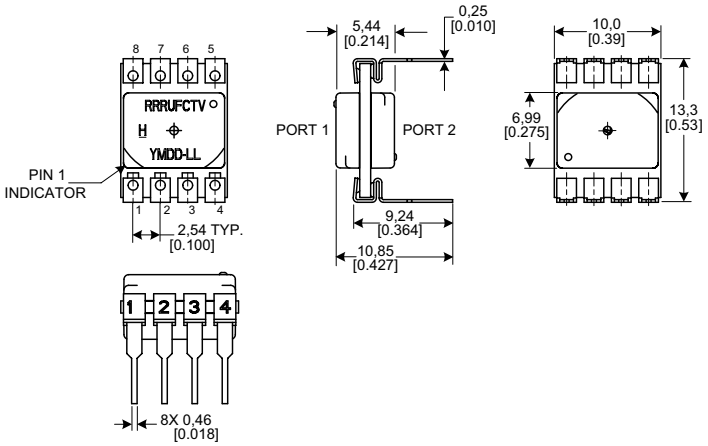
DIP AN: SIngle axial barbed port	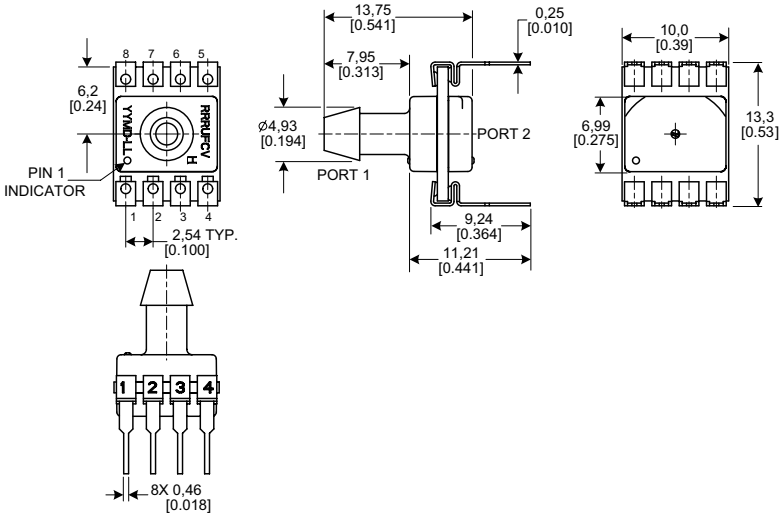
DIP LN: Single axial barbless port	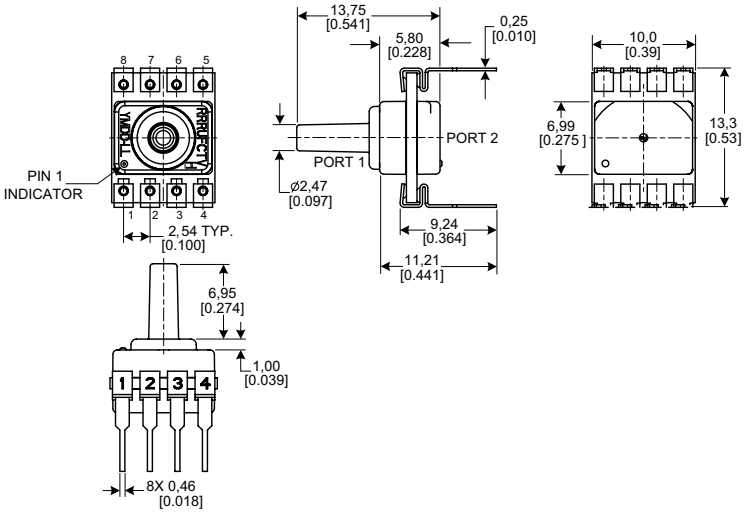

Dimensional Drawings
DIP Packages

Figure 6. DIP Package Dimensional Drawings (continued)

	Dimensions
DIP RN: Single radial barbed port 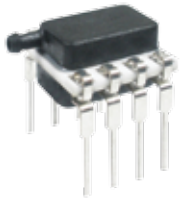	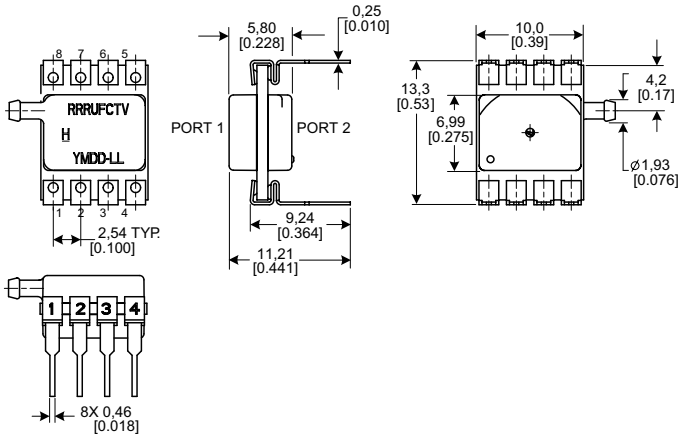
DIP RR: Dual radial barbed ports, same side 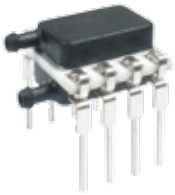	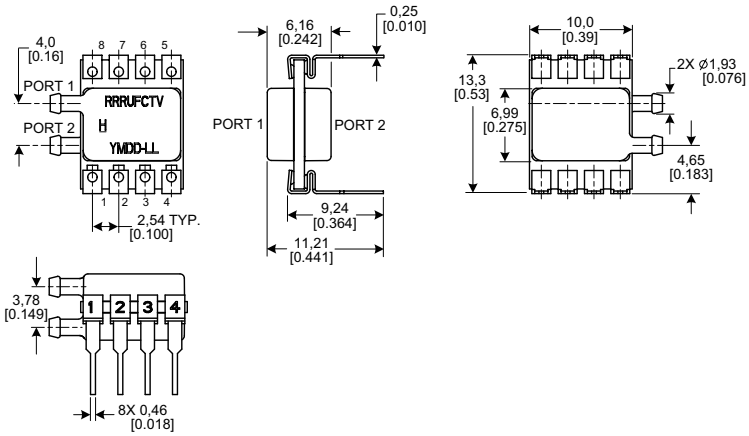
DIP DR: Dual radial barbed ports, opposite sides	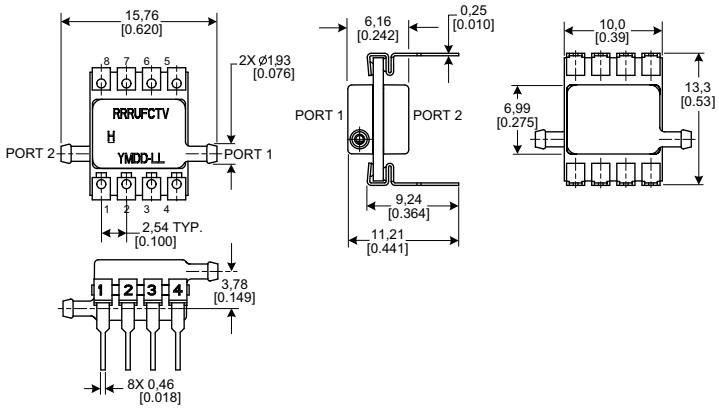

Dimensional Drawings
DIP and SMT Packages

Figure 6. DIP Package Dimensional Drawings (continued)

Dimensions	
DIP JN: Single radial barbless port	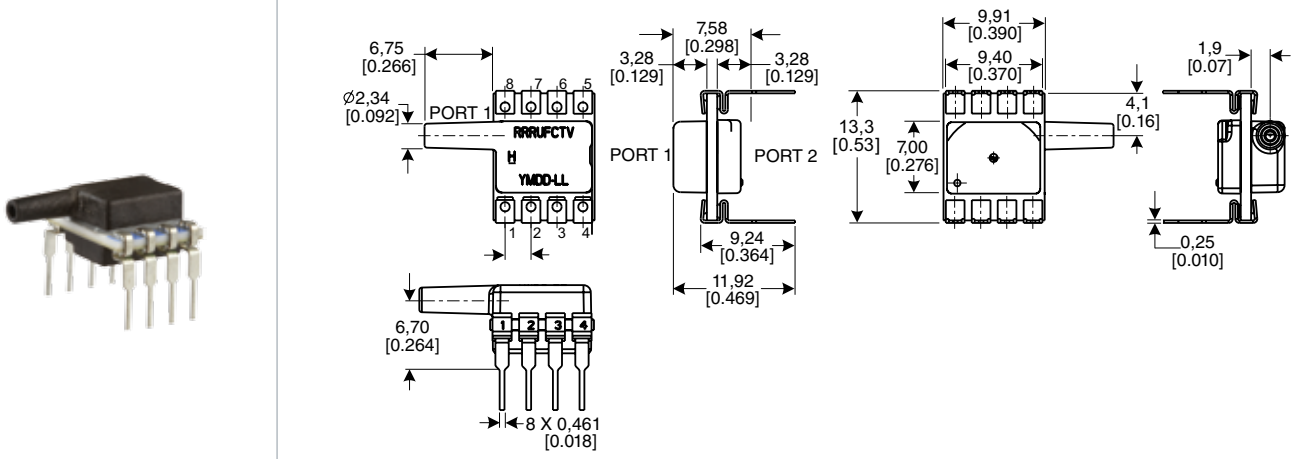
DIP JJ: Dual radial radial barbless ports, same side	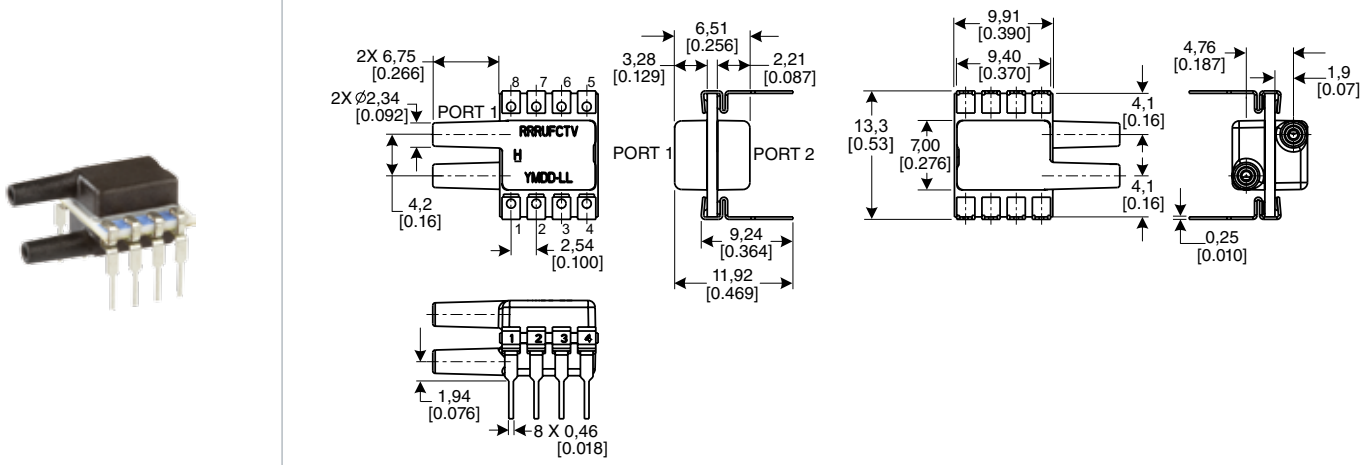

Figure 7. SMT Package Dimensional Drawings (For reference only: mm [in].)

Dimensions	
SMT NN: No ports	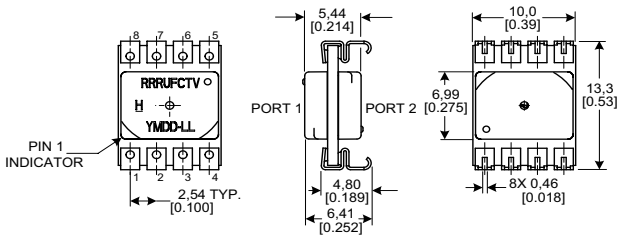

Dimensional Drawings
SMT Packages

Figure 7. SMT Package Dimensional Drawings (continued)

	Dimensions
SMT AN: Single axial barbed port	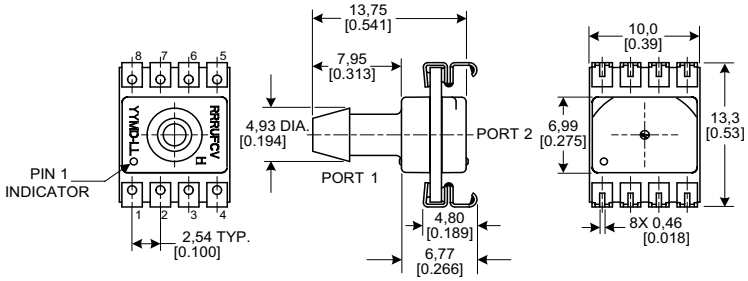
SMT LN: Single axial barbless port	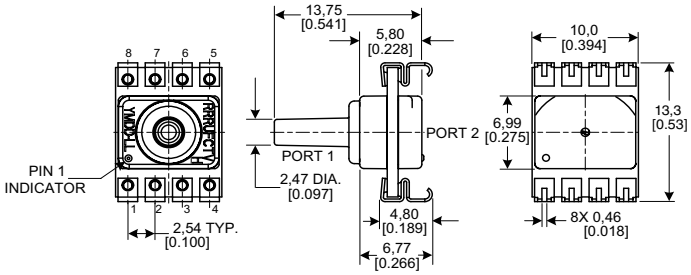
SMT RN: Single radial barbed port	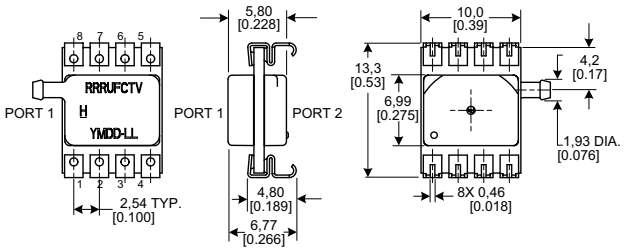

Dimensional Drawings
SMT Packages

Figure 7. SMT Package Dimensional Drawings (continued)

	Dimensions
SMT RR: Dual radial barbed ports, same side	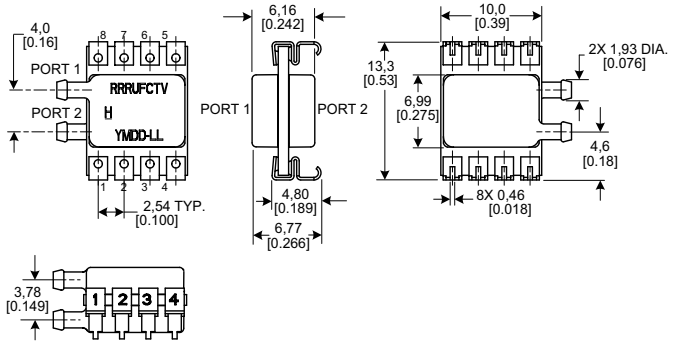
SMT DR: Dual radial barbed ports, opposite sides	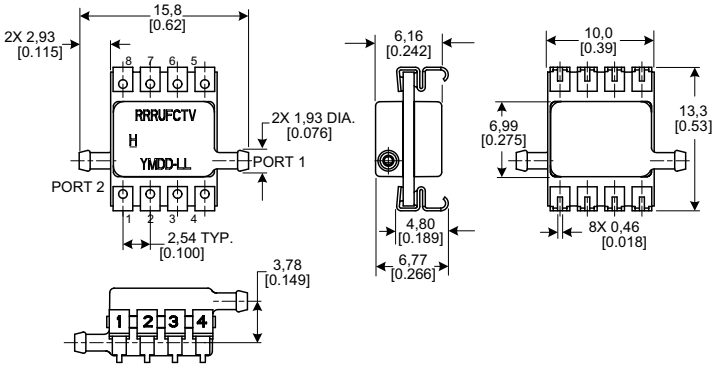
SMT JN: Single radial barbless port	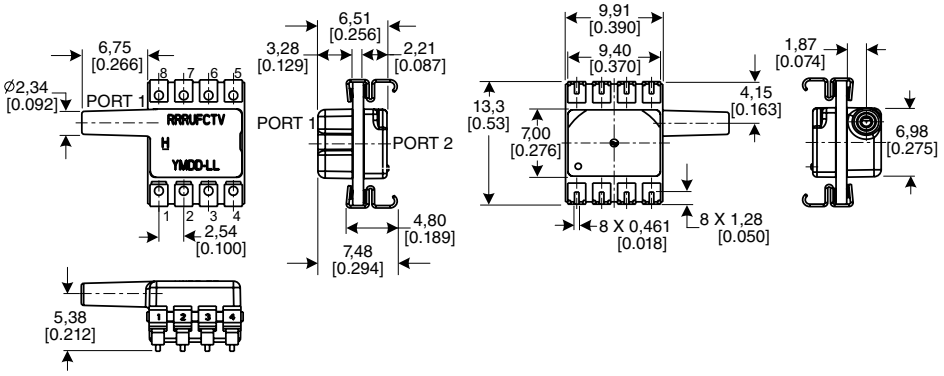

Dimensional Drawings
SMT and SIP Packages

Figure 7. SMT Package Dimensional Drawings (continued)

Dimensions	
SMT JJ: Dual radial barbless ports, same side	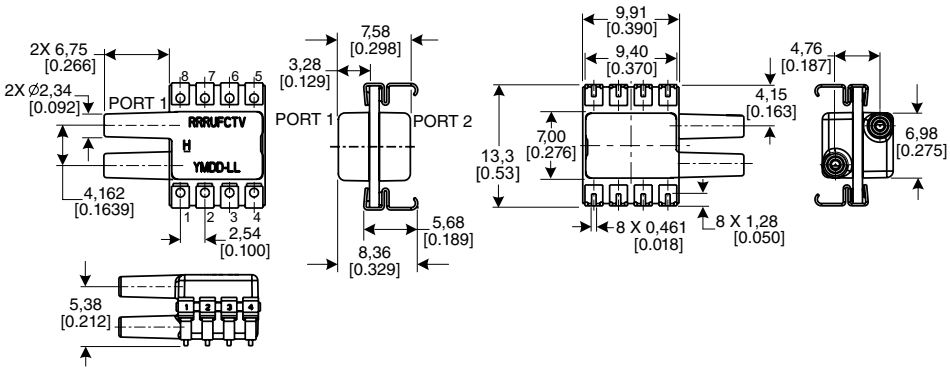

Figure 8. SIP Package Dimensional Drawings (For reference only: mm [in].)

Dimensions	
SIP NN: No ports 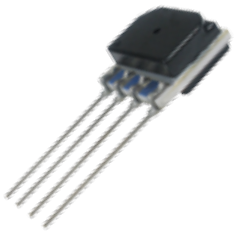	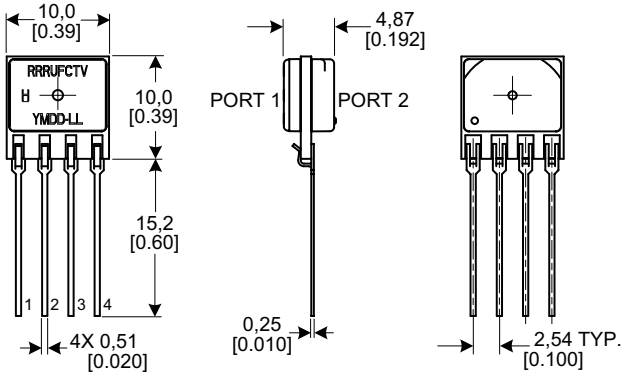
SIP AA: Dual axial barbed ports, opposite sides	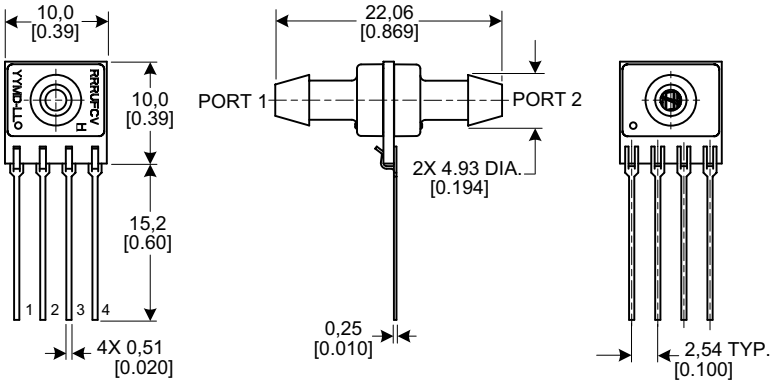

Dimensional Drawings
SIP Packages

Figure 8. SIP Package Dimensional Drawings (continued)

	Dimensions
SIP AN: Single axial barbed port	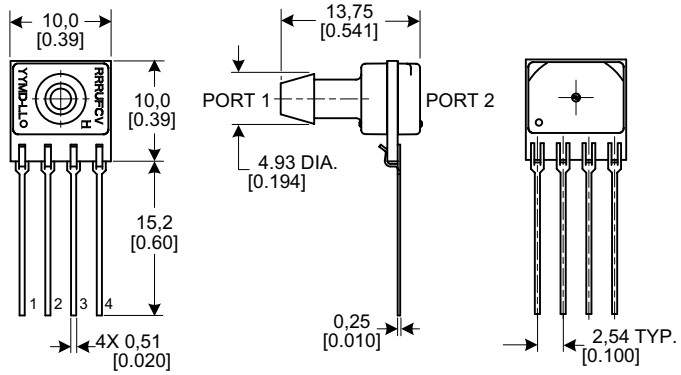
SIP LN: Single axial barbless port	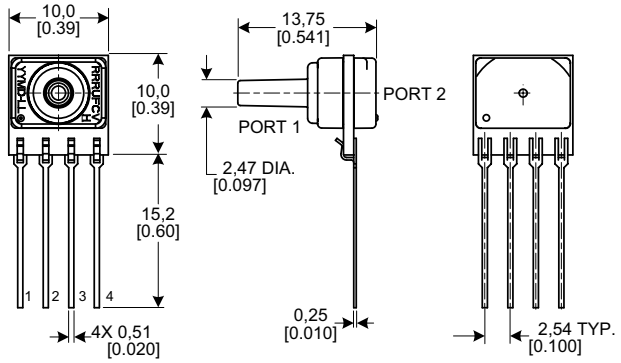
SIP FF: Fastener mount, dual axial barbed ports, opposite sides	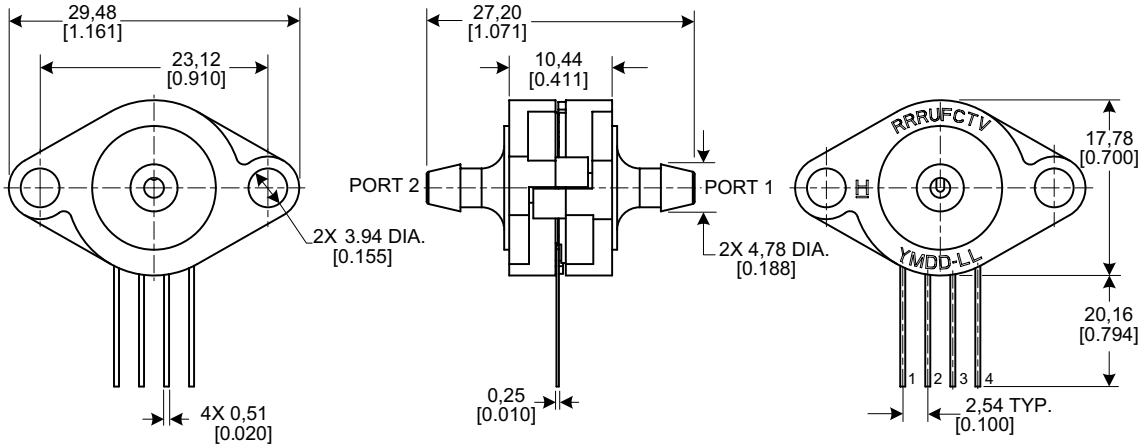

Dimensional Drawings
SIP Packages

Figure 8. SIP Package Dimensional Drawings (continued)

	Dimensions
SIP FN: Fastener mount, single axial barbed port	

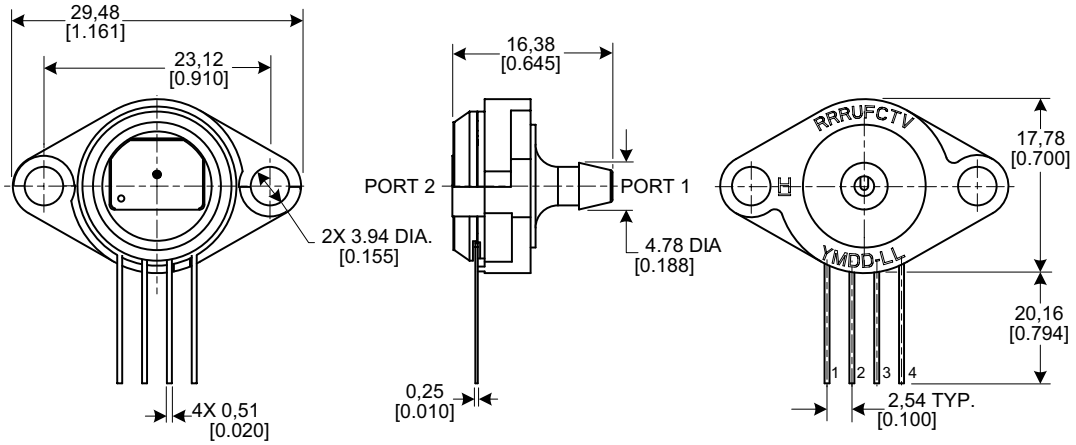

SIP GN: Ribbed fastener mount, single axial barbed port

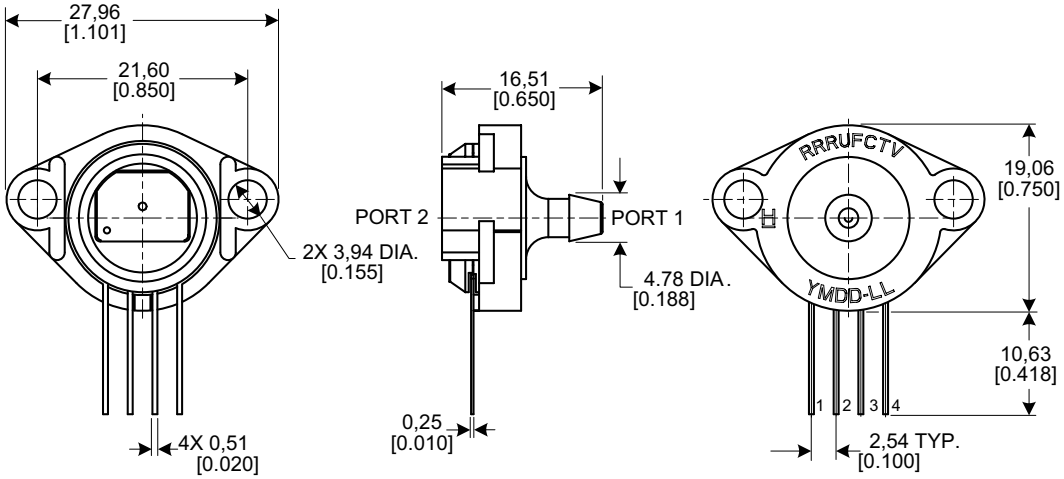

SIP NB: Fastener mount, dual axial ports, same side

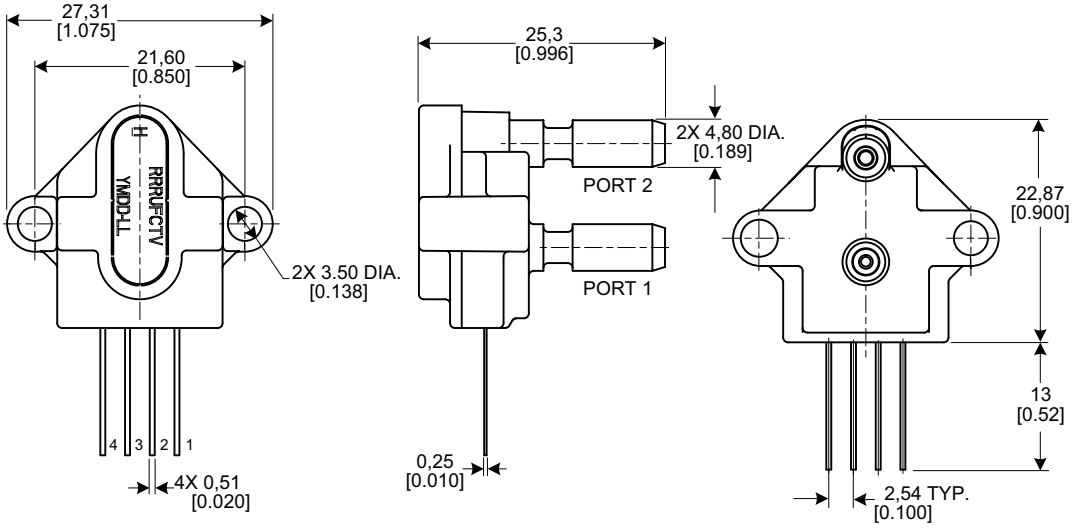

Dimensional Drawings
SIP Packages

Figure 8. SIP Package Dimensional Drawings (continued)

	Dimensions
SIP RN: Single radial barbed port	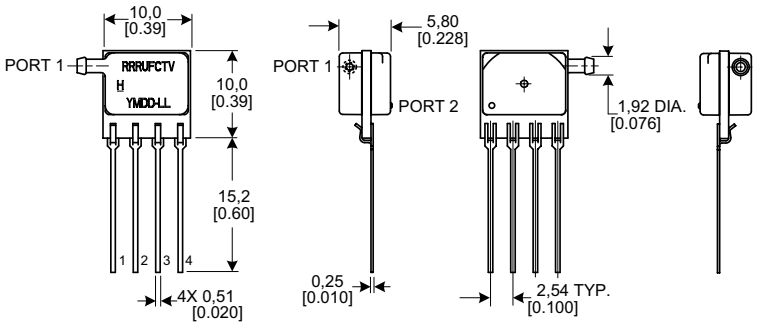
SIP RR: Dual radial barbed ports, same side	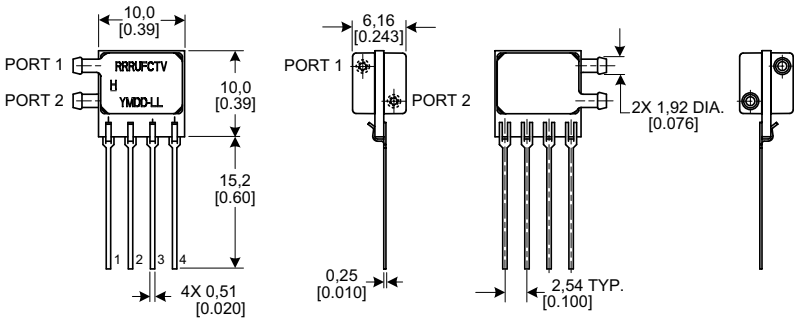
SIP DR: Dual radial barbed ports, opposite sides	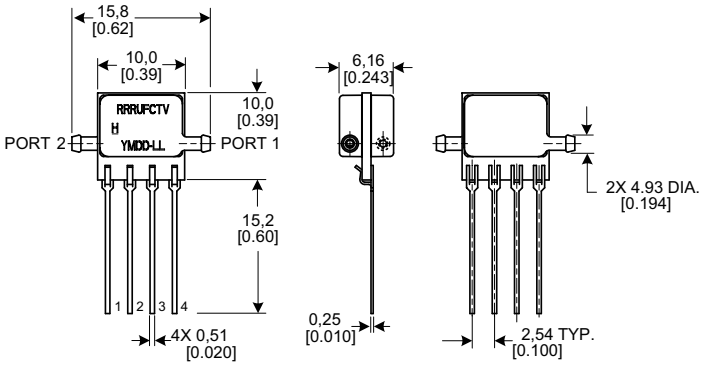

Dimensional Drawings
SIP Packages

Figure 8. SIP Package Dimensional Drawings (continued)

	Dimensions
SIP JN: Single radial barbless port	
SIP JJ: Dual radial barbless ports, same side	
SIP HH: Fastener mount dual radial barbed ports, same side	

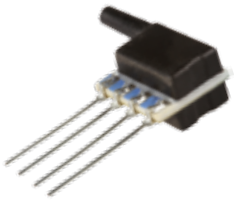

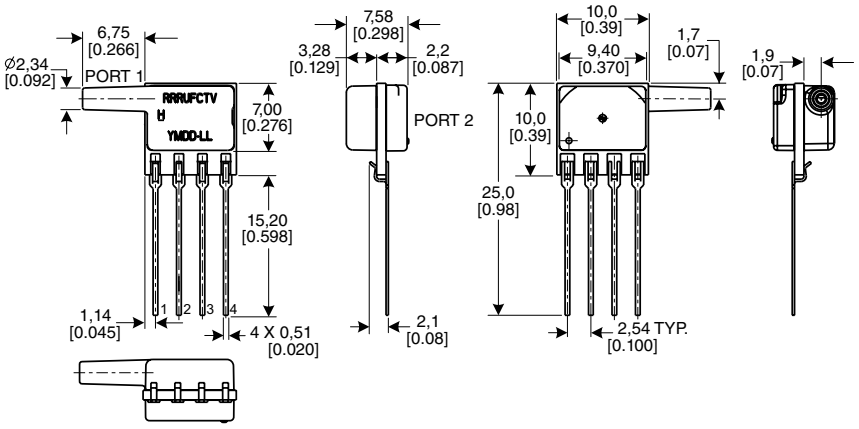

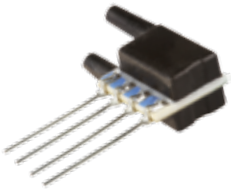

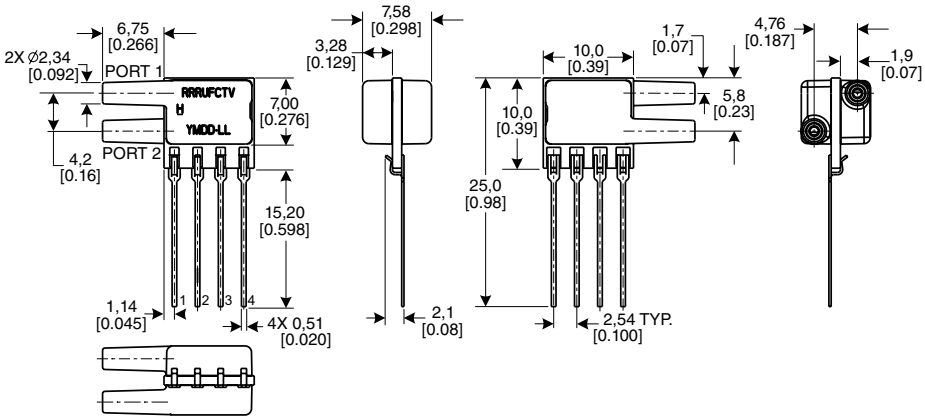

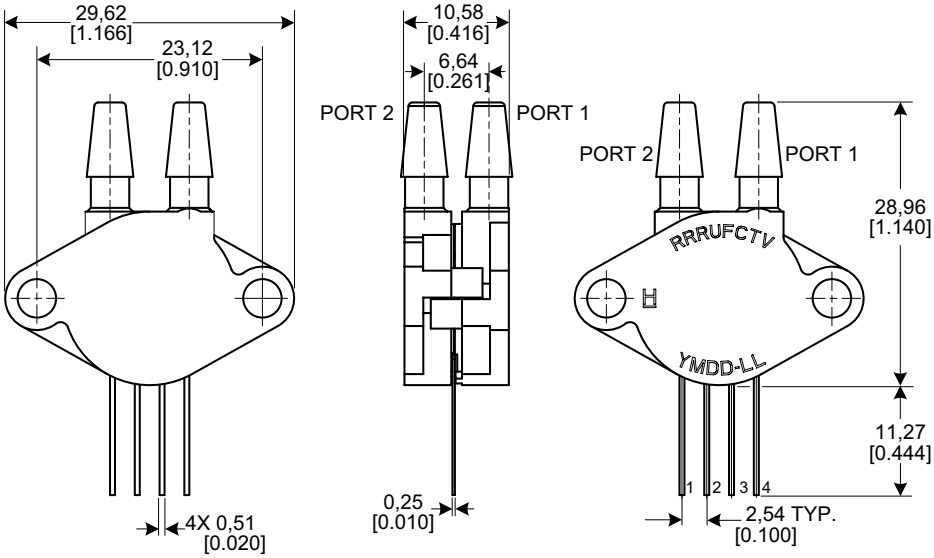

Dimensional Drawings
SIP Packages

Figure 8. SIP Package Dimensional Drawings (continued)

Dimensions	
SIP HN: Fastener mount single radial barbed port	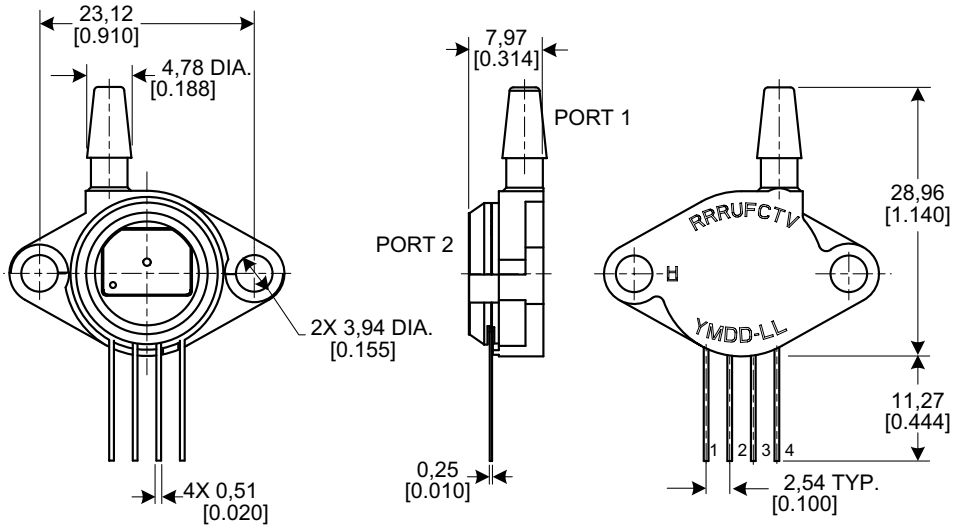
SIP MN: Manifold mount, outer diameter seal	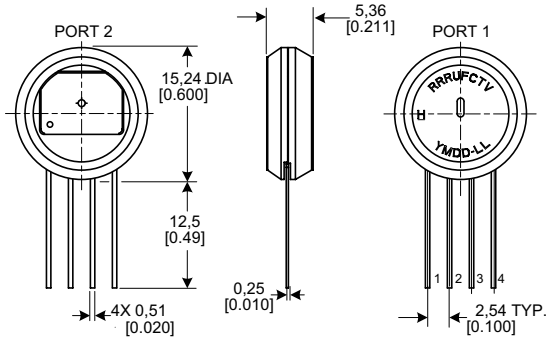
SIP SN: Manifold mount, inner diameter seal	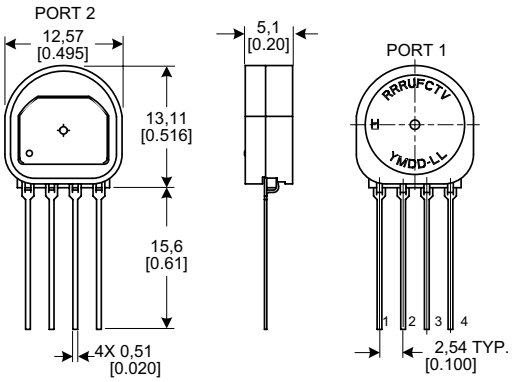

Pinouts, PCB Pad Layout

Table 11. Pinouts for DIP and SMT Packages

Output Type	Pin 1	Pin 2	Pin 3	Pin 4	Pin 5	Pin 6	Pin 7	Pin 8
I^2C	GND	V_{supply}	SDA	SCL	NC	NC	NC	NC
SPI	GND	V_{supply}	MISO	SCLK	SS	NC	NC	NC
Analog	NC	V_{supply}	V_{out}	GND	NC	NC	NC	NC

Table 12. Pinouts for SIP Packages

Output Type	Pin 1	Pin 2	Pin 3	Pin 4
I^2C	GND	V_{supply}	SDA	SCL
Analog	NC	V_{supply}	V_{out}	GND

Figure 9. Recommended PCB Pad Layouts

DIP	SMT	SIP
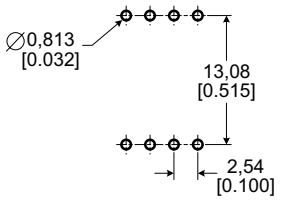	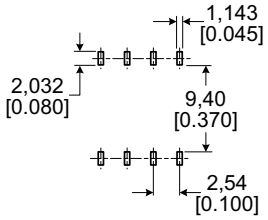	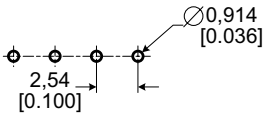

TruStability® Board Mount Pressure Sensors Portfolio Overview

Table 13. TruStability® Board Mount Pressure Sensors Portfolio Overview

Characteristic	Series			
	HSC	SSC	TSC	NSC
Package:				
DIP (Dual In-Line Pin)	✓	✓	✓	✓
SMT (Surface Mount Technology)	✓	✓	✓	✓
SIP (Single In-Line Pin)	✓	✓	✓	✓
Option:				
dry gases only, no diagnostics (all pressure ranges)	✓	✓	✓	✓
dry gases only, diagnostics on (all pressure ranges)	✓	✓	–	–
liquid media on port 1, no diagnostics (±60 mbar to ±10 bar | ±6 kPa to ±1 MPa | ±1 psi to ±150 psi)	✓	✓	✓	✓
liquid media on port 1, diagnostics on (±60 mbar to ±10 bar | ±6 kPa to ±1 MPa | ±1 psi to ±150 psi)	✓	✓	–	–
Pressure range:				
Absolute:				
1 bar to 10 bar | 100 kPa to 1 MPa | 15 psi to 150 psi	✓	✓	–	✓
Differential:				
±60 mbar to ±10 bar | ±6 kPa to ±1 MPa | ±1 psi to ±150 psi	✓	✓	✓	✓
±1.6 mbar to ±40 mbar | ±160 Pa to ±4 kPa | ±0.5 inH_2O to ±30 inH_2O	✓	✓	–	✓
Gage:				
60 mbar to 10 bar | 6 kPa to 1 MPa | 1 psi to 150 psi	✓	✓	✓	✓
2.5 mbar to 40 mbar | 250 Pa to 4 kPa | 1 inH_2O to 30 inH_2O	✓	✓	–	✓
Temperature compensated	✓	✓	✓	–
Amplified	✓	✓	–	–
Output type:				
analog	✓	✓	✓	✓
digital (SPI and I^2C)	✓	✓	–	–
Transfer function:				
10% to 90% of Vsupply (analog), 2^{14} counts (digital)	✓	✓	–	–
5% to 95% of Vsupply (analog), 2^{14} counts (digital)	✓	✓	–	–
5% to 85% of Vsupply (analog), 2^{14} counts (digital)	✓	✓	–	–
4% to 94% of Vsupply (analog), 2^{14} counts (digital)	✓	✓	–	–
Supply voltage:				
3.3 Vdc	✓	✓	–	–
5.0 Vdc	✓	✓	–	–
1.5 Vdc to 12.0 Vdc (for pressure ranges ≥60 mbar | 6 kPa | 1 psi)	–	–	✓	✓
2.7 Vdc to 6.5 Vdc (for pressure ranges ≤40 mbar | 4 kPa | 20 inH_2O)	–	–	–	✓
Accuracy ≤0.25 %FSS BFSL	✓	✓	✓	✓
Compensated temperature range:				
-20 °C to 85 °C [-4 °F to 185 °F]	–	✓	–	–
0 °C to 85 °C [32 °F to 185 °F]	–	–	✓	–
0 °C to 50 °C [32 °F to 122 °F]	✓	–	–	–
Operating temperature range:				
-20 °C to 85 °C [-4 °F to 185 °F]	✓	–	–	–
-40 °C to 85 °C [-40 °F to 185 °F]	–	✓	✓	✓
Total Error Band:				
down to ±1% Full Scale Span max.	✓	–	–	–
down to ±2% Full Scale Span max.	–	✓	–	–

ADDITIONAL INFORMATION

The following associated literature is available at sensing.honeywell.com:

- Product line guide
- Product range guide
- Product nomenclature tree
- Installation instructions
- Application information
- Technical notes:
  - I^2C Communications with Honeywell Digital Output Pressure Sensors
  - SPI Communications with Honeywell Digital Output Pressure Sensors

⚠ WARNING

PERSONAL INJURY

DO NOT USE these products as safety or emergency stop devices or in any other application where failure of the product could result in personal injury.

Failure to comply with these instructions could result in death or serious injury.

⚠ WARNING

MISUSE OF DOCUMENTATION

- The information presented in this product sheet is for reference only. Do not use this document as a product installation guide.
- Complete installation, operation, and maintenance information is provided in the instructions supplied with each product.

Failure to comply with these instructions could result in death or serious injury.

WARRANTY/REMEDY

Honeywell warrants goods of its manufacture as being free of defective materials and faulty workmanship. Honeywell's standard product warranty applies unless agreed to otherwise by Honeywell in writing; please refer to your order acknowledgement or consult your local sales office for specific warranty details. If warranted goods are returned to Honeywell during the period of coverage, Honeywell will repair or replace, at its option, without charge those items it finds defective. **The foregoing is buyer's sole remedy and is in lieu of all other warranties, expressed or implied, including those of merchantability and fitness for a particular purpose. In no event shall Honeywell be liable for consequential, special, or indirect damages.**

While we provide application assistance personally, through our literature and the Honeywell website, it is up to the customer to determine the suitability of the product in the application.

Specifications may change without notice. The information we supply is believed to be accurate and reliable as of this printing. However, we assume no responsibility for its use.

Sales and Service

Honeywell serves its customers through a worldwide network of sales offices, representatives and distributors. For application assistance, current specifications, pricing or name of the nearest Authorized Distributor, contact your local sales office or email us at **info.sc@honeywell.com**. Visit us on the Web at **sensing.honeywell.com**

Phone and Fax:

Asia Pacific	+65 6355-2828
	+65 6445-3033 Fax
Europe	+44 (0) 1698 481481
	+44 (0) 1698 481676 Fax
Latin America	+1-305-805-8188
	+1-305-883-8257 Fax
USA/Canada	+1-800-537-6945
	+1-815-235-6847
	+1-815-235-6545 Fax

Sensing and Control
Honeywell
1985 Douglas Drive North
Golden Valley, MN 55422
honeywell.com

50099148-A-EN IL50
August 2014
© 2014 Honeywell International Inc. All rights reserved.

OCEAN CHIPS
Океан Электроники
Поставка электронных компонентов

Компания «Океан Электроники» предлагает заключение долгосрочных отношений при поставках импортных электронных компонентов на взаимовыгодных условиях!

Наши преимущества:

- Поставка оригинальных импортных электронных компонентов напрямую с производств Америки, Европы и Азии, а так же с крупнейших складов мира;
- Широкая линейка поставок активных и пассивных импортных электронных компонентов (более 30 млн. наименований);
- Поставка сложных, дефицитных, либо снятых с производства позиций;
- Оперативные сроки поставки под заказ (от 5 рабочих дней);
- Экспресс доставка в любую точку России;
- Помощь Конструкторского Отдела и консультации квалифицированных инженеров;
- Техническая поддержка проекта, помощь в подборе аналогов, поставка прототипов;
- Поставка электронных компонентов под контролем ВП;
- Система менеджмента качества сертифицирована по Международному стандарту ISO 9001;
- При необходимости вся продукция военного и аэрокосмического назначения проходит испытания и сертификацию в лаборатории (по согласованию с заказчиком);
- Поставка специализированных компонентов военного и аэрокосмического уровня качества (Xilinx, Altera, Analog Devices, Intersil, Interpoint, Microsemi, Actel, Aeroflex, Peregrine, VPT, Syfer, Eurofarad, Texas Instruments, MS Kennedy, Miteq, Cobham, E2V, MA-COM, Hittite, Mini-Circuits, General Dynamics и др.);

Компания «Океан Электроники» является официальным дистрибьютором и эксклюзивным представителем в России одного из крупнейших производителей разъемов военного и аэрокосмического назначения **«JONHON»**, а так же официальным дистрибьютором и эксклюзивным представителем в России производителя высокотехнологичных и надежных решений для передачи СВЧ сигналов **«FORSTAR»**.

AVIC JONHON

«JONHON» (основан в 1970 г.)

Разъемы специального, военного и аэрокосмического назначения:

(Применяются в военной, авиационной, аэрокосмической, морской, железнодорожной, горно- и нефтедобывающей отраслях промышленности)

«FORSTAR» (основан в 1998 г.)

ВЧ соединители, коаксиальные кабели, кабельные сборки и микроволновые компоненты:

(Применяются в телекоммуникациях гражданского и специального назначения, в средствах связи, РЛС, а так же военной, авиационной и аэрокосмической отраслях промышленности).

FORSTAR®

Телефон: 8 (812) 309-75-97 (многоканальный)
Факс: 8 (812) 320-03-32
Электронная почта: ocean@oceanchips.ru
Web: http://oceanchips.ru/
Адрес: 198099, г. Санкт-Петербург, ул. Калинина, д. 2, корп. 4, лит. А