Ordering number : ENA2153

LC75106V

CMOS LSI

Digital Echo LSI with Built-in Mic Amplifier

ON Semiconductor®

http://onsemi.com

Overview

The LC75106V is a digital echo LSI for karaoke. It has the microcomputer control mode (I^2C BUS control) and non-control mode. Therefore, various karaoke systems can be made.
This LSI has 2ch mic amplifier (with ALC), volume of 2ch mic, echo feed back volume and echo volume.
In addition, when the stereo signal internal connected mode has the function of the vocal cancellation etc.
The karaoke system can be constructed with this LSI.

Functions

- 2ch mic amplifier (with built-in Auto Level Control)
- Volume of 2ch mic
- With built-in for digital echo memory 32kbit
- Feedback volume for digital echo
- Digital echo volume
- Mic mixing function
- Vocal cancellation
- With built-in oscillation circuit
- I^2C bus control

Application

- Mini component audio and other

* I^2C Bus is a trademark of Philips Corporation.

Semiconductor Components Industries, LLC, 2013

Specifications

Absolute Maximum Ratings at Ta = 25°C, Analog GND = 0V

Parameter	Symbol	Conditions	Ratings	unit
Maximum power supply voltage	V_{DD} max	V_{DD}	+8.0 to +10.0	V
Allowable consumption power	Pd max	Ta ≤ 70°C *	500	mW
Operating temperature range	Ta		-20 to +70	°C
Storage temperature range	Tstg		-40 to +125	°C

* Mounted reference PCB (114.3mm × 76.1mm × 1.6mm, glass epoxy resin)

Stresses exceeding Maximum Ratings may damage the device. Maximum Ratings are stress ratings only. Functional operation above the Recommended Operating Conditions is not implied. Extended exposure to stresses above the Recommended Operating Conditions may affect device reliability.

DC Electrical Characteristics Ratings at Ta = 25°C, V_{SS} = 0V

Operating Condition/Ta = 25°C

Parameter	Symbol	Pin name	Conditions	min	typ	max	unit
Recommended supply voltage	V_{DD}	V_{DD}			9.0		V
Range of operating supply voltage	V_{DD}opg	V_{DD}	V_{DD}=9.0V	8.0		10.0	V

Electric Characteristics/Ta = 25°C, V_{DD} = 9.0V, fin = 1kHz, V_{IN} = 1mVrms = 0dB, R_L = 10kΩ

Parameter	Symbol	Pin name	Conditions	min	typ	max	unit
Current without signal	$I_{DD}O$	V_{DD}				60	mA
Clock frequency	F_{CLK}	OSC	OSC Ex.R=30kΩ	1.72	2.45	3.19	MHz
Control data Hi Level voltage	V_{IH}	SCL, SDA		2.0		3.5	V
Control data Low Level voltage	V_{IL}	SCL, SDA		0.0		0.5	V
Control data Input pulse width	tϕW	SCL, SDA		1.0			µs
Control data Hold time	thold	SCL, SDA		1.0			µs
Control data Operation frequency	fopg	SCL, SDA				500	kHz

AC Electrical Characteristics (Reference data: No measurement)

Parameter	Symbol	Pin name	Conditions	min	typ	max	unit
[Mic-AMP] Input=MICIN1/MICIN2, Output=MICOUT1/MICOUT2, V_{IN}=-48dBV, VALC=VREF – 1.414V, Mic-AMP NF Ex.R=680Ω, ALC Ex.C=2.2µF							
Mic Gain	VG_{M2}	MICOUT1/2	Mic-AMP NF Ex.R=680Ω	+34.0	+37.0	+42.0	dB
Max output voltage	Vo_{TM}	MICOUT1/2	Mic Gain=+38dB, THD=1%, Filter=A-filter, ALC=OFF	1.75			Vrms
Total harmonic distortion rate1	THD_{M1}	MICOUT1/2	Mic Gain=+38dB, ALC=OFF, V_O=-10dBV, Filter=A-filter		0.07	0.5	%
Total harmonic distortion rate 2	THD_{M2}	MICOUT1/2	Mic Gain=+38dB, ALC=ON, V_O=0dBV, V_{IN}=-32dBV, Filter=A-filter		0.1	1.0	%
Output noise voltage	VNO_M	MICOUT1/2	Mic Gain=+38dB, Filter=A-filter		-74.0	-65.0	dBV
ALC attack time	Ta_A	MICOUT1/2	Mic Gain=+38dB, ALC=ON, V_O=0dBV, V_{IN}=-32dBV		60		ms
ALC release time	Ta_R	MICOUT1/2	Mic Gain=+38dB, ALC=ON, V_O=0dBV, V_{IN}=-32dBV		6.0		s
Input impedance	Zi_M	MICIN1/2		45	60	75	kΩ
Output impedance	Zo_M	MICOUT1/2	Mic-Gain=+38dB, ALC=OFF, V_O=0dBV	0.75	1.5	3.0	kΩ
[Digital ECHO] Stereo signal outside connection modes, Input=SUMIN, Output=ECHOOUT, V_{IN}=-10dBV, Delay Time=100ms, Mic Volume 1/2=0dB, Feedback Volume=-∞							
Delay time	DT	ECHOOUT	F_{CLK}=2.45MHz	75	100	125	ms
Output Gain	VG_E	ECHOOUT		-4.5	-2.0	+0.5	dB
Max output voltage	Vo_E	ECHOOUT	THD=10%, Filter=A-filter	1.5			Vrms
Total harmonic distortion rate	THD_E	ECHOOUT	Filter=A-filter		0.7	2.0	%
Output noise voltage	VNO_E	ECHOOUT	Filter=A-filter		-65	-55	dBV
Input impedance	Zi_E	SUMIN		45	60	75	kΩ
Output impedance	Zo_E	ECHOOUT	Delay time=100ms, V_O=0dBV	45	60	75	kΩ

Continued to the next page.

Continued from the previous page.

Parameter	Symbol	Pin name	Conditions	min	typ	max	unit
[Stereo Line] Stereo signal internal connection modes, Input=LCHIN/RCHIN, Output=LCHOUT/RCHOUT, V_{IN}=-10dBV, Line Select=Stereo, Mic-Volume 1/2=ECHO Volume=-∞							
Output Gain	VG_S	Lch/RchOUT		-3.5	-1.5	+0.5	dB
Max output voltage	Vo_S	Lch/RchOUT	THD=1%, Filter=A-filter	1.75			Vrms
Total harmonic distortion rate	THD_S	Lch/RchOUT	Filter=A-filter		0.03	0.1	%
Output noise voltage	VNO_S	Lch/RchOUT	Filter=A-filter		-85.0	-75.0	dBV
Vocal removal rate		Lch/RchOUT		-21.5	-17.5	-14.5	
Input impedance	Zi_S	Lch/RchIN		75	100	125	kΩ
Output impedance	Zo_S	Lch/RchOUT	V_O=0dBV	0.75	1.5	3.0	kΩ
[Mic Sum-AMP] Stereo signal outside connection modes, Input=IN1/IN2, Output=SUMOUT, V_{IN}=-10dBV							
Output Gain	VG_{MS}	SUMOUT		+4.0	+5.5	+7.0	dB
Max output voltage	Vo_{MS}	SUMOUT	THD=1%, Filter=A-filter	1.75			Vrms
Total harmonic distortion rate	THD_{MS}	SUMOUT	Filter=A-filter		0.05	0.5	%
Output noise voltage	VNO_{MS}	SUMOUT	Filter=A-filter		-77.0	-70.0	dBV
Input impedance	Zi_{MS}	IN1/IN2		45	60	75	kΩ
Output impedance	Zo_{MS}	SUMOUT	V_O=0dBV	1.0	2.0	4.0	kΩ
[ECHO Sum-AMP] Stereo signal outside connection modes, Input=SUMIN/ECHOIN, Output=OUT, V_{IN}=-10dBV							
Output Gain	VG_{ES}	OUT		+4.0	+5.5	+7.0	dB
Max output voltage	Vo_{ES}	OUT	THD=1%, Filter=A-filter	1.75			Vrms
Total harmonic distortion rate	THD_{ES}	OUT	Filter=A-filter		0.05	0.5	%
Output noise voltage	VNO_{ES}	OUT	Filter=A-filter		-77.0	-70.0	dBV
Input impedance	Zi_{ES}	SUMIN/ECHOIN		45	60	75	kΩ
Output impedance	Zo_{ES}	OUT	V_O=0dBV	1.0	2.0	4.0	kΩ

Package Dimensions

unit:mm (typ)

3247A

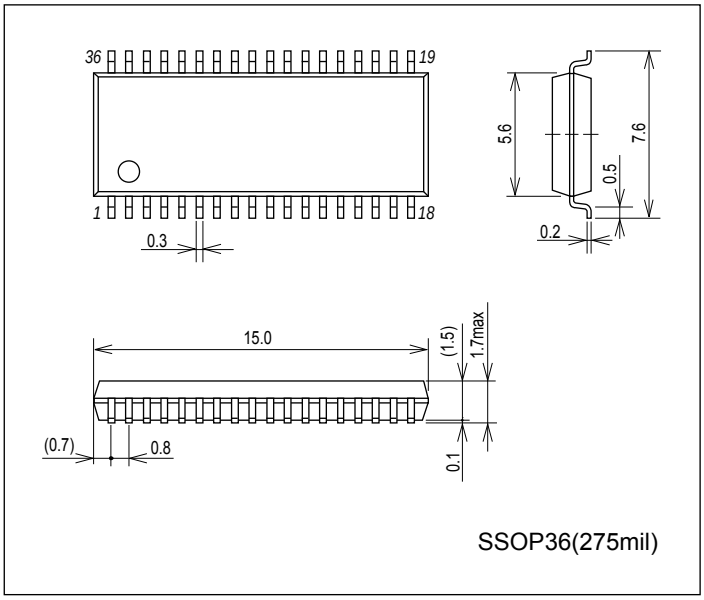

Pin Assignment

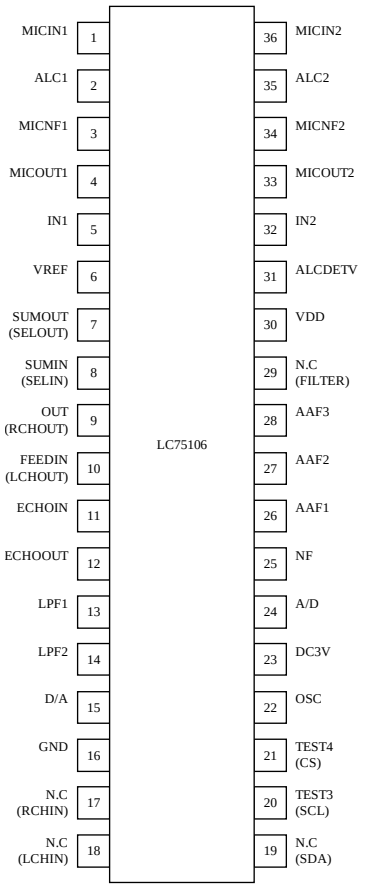

Top view

Block Diagram

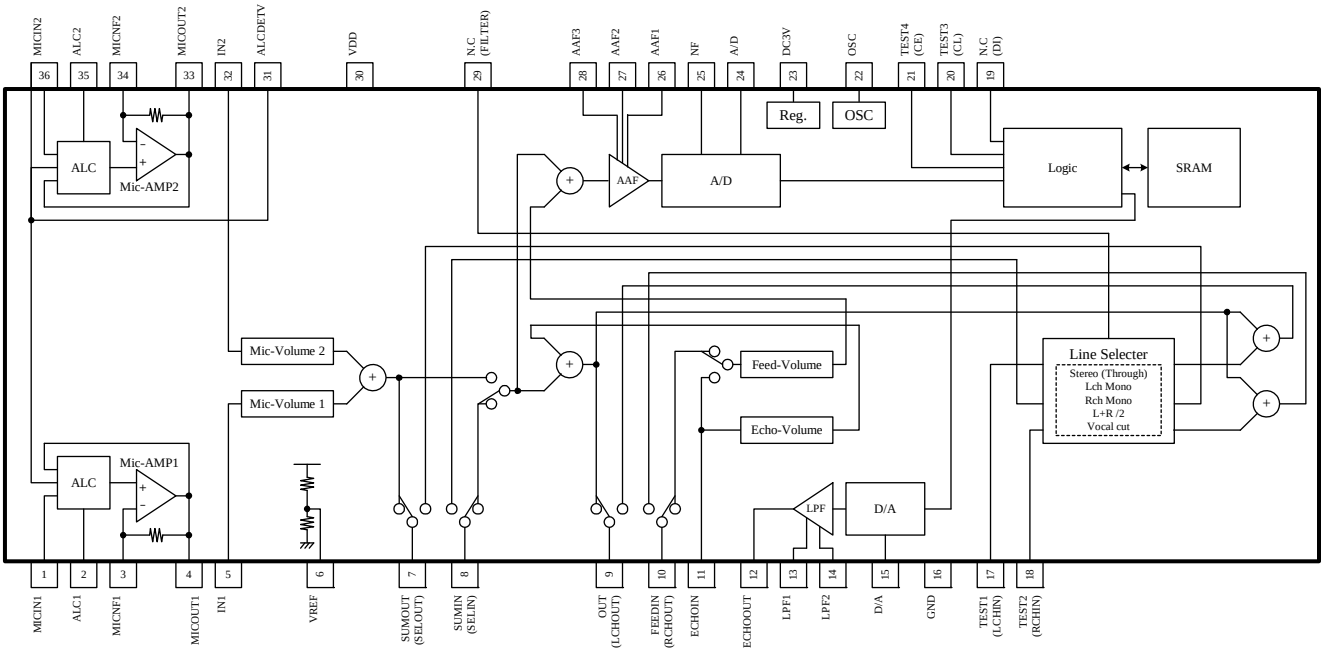

Pin Descriptions

Pin No.	Pin Name	Voltage	Description	Equivalent circuit
1 36	MICIN1 MICIN2	$V_{DD}/2$	Mic signal input 1 Mic signal input 2	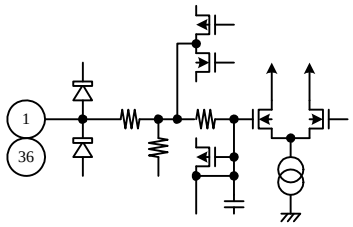
2 35	ALC1 ALC2		Auto level control terminal 1 Auto level control terminal 2	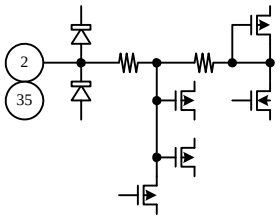
3 34	MICNF1 MICNF2		Mic feedback signal input terminal 1 Mic feedback signal input terminal 2	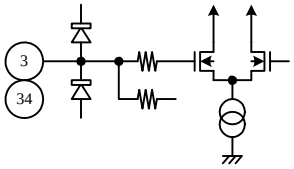
4 33	MICOUT1 MICOUT2		Mic signal output terminal 1 Mic signal output terminal 2	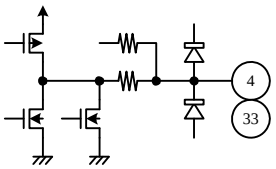
5 32	IN1 IN2		Mic volume input terminal 1 Mic volume input terminal 2	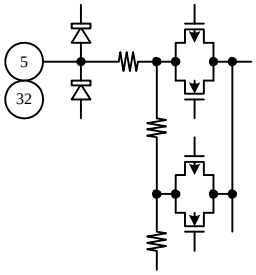
6	VREF		Internal standard voltage	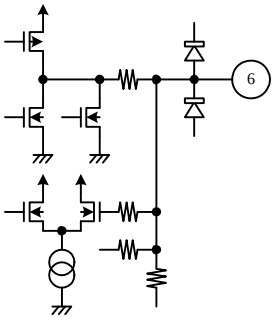

Continued to the next page.

Continued from the previous page.

Pin No.	Pin Name	Voltage	Description	Equivalent circuit
7	SUMOUT/SELOUT		[CS terminal = “L”] Mic volume 1/2 sum output [CS terminal = “H”] Selector output terminal	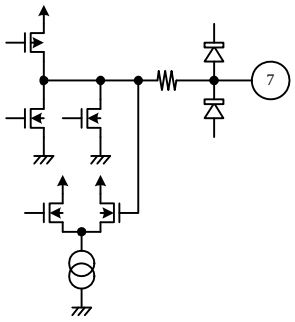
8	SUMIN/SELIN		[CS terminal = “L”] Delay signal input [CS terminal = “H”] Selector input terminal	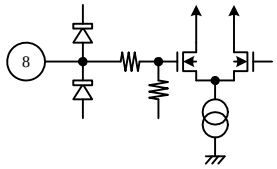
9	OUT/RCHOUT		[CS terminal = “L”] ECHOIN signal, MICSUM signal sum output [CS terminal = “H”] Rch output	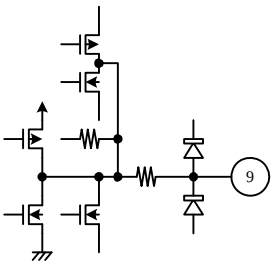
10	FEEDIN/LCHOUT		[CS terminal = “L”] Echo feed back signal input [CS terminal = “H”] Lch output	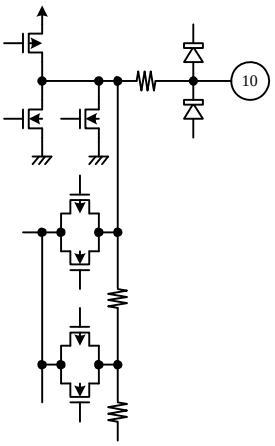
11	ECHOIN		Echo signal input (Echo volume input)	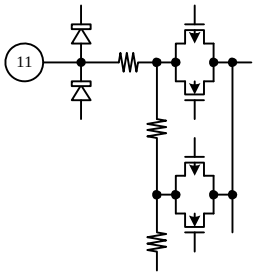
12	ECHOOUT		Echo signal output	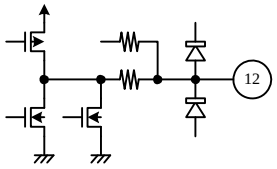

Continued to the next page.

Continued from the previous page.

Pin No.	Pin Name	Voltage	Description	Equivalent circuit
13 14	LPF1 LPF2		LPF input terminal 1 LPF input terminal 2	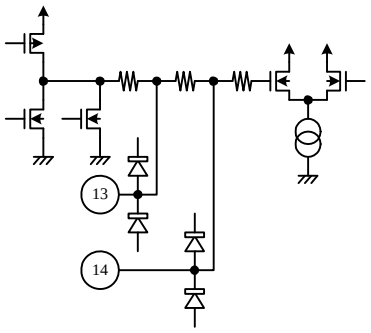
15 24	D/A A/D		Terminal for A/D Terminal for D/A	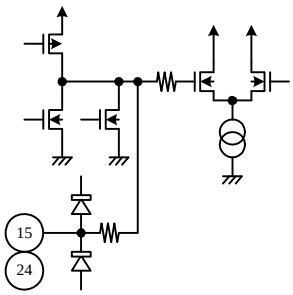
16	GND		Analog GND	
17 18	NC/RCHIN NC/LCHIN		Rch input terminal Lch input terminal	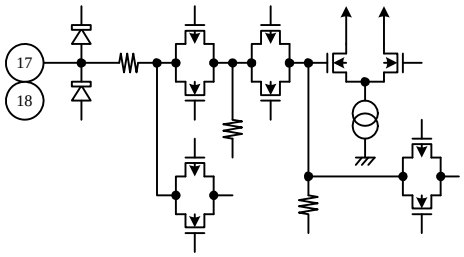
19	SDA	0V/3.3V	I^2C bus SDA terminal	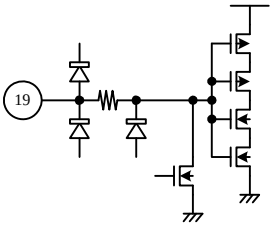
20 21	SCL CS	0V/3.3V	I^2C bus SCL terminal MODE select terminal	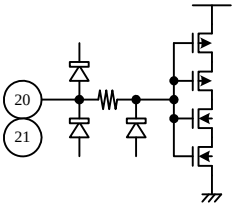
22	OSC		Oscillator circuit adjustment terminal	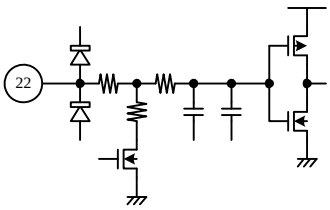

Continued to the next page.

Continued from the previous page.

Pin No.	Pin Name	Voltage	Description	Equivalent circuit
23	DC3V	3.3V	Power source for logic block	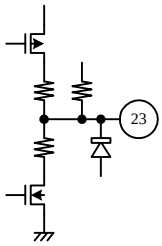
25	NF		Terminal for A/D	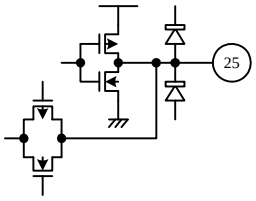
26	AAF1		AAF input terminal 1	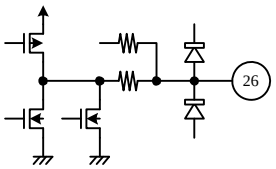
27 28	AAF2 AAF3		AAF input terminal 2 AAF input terminal 3	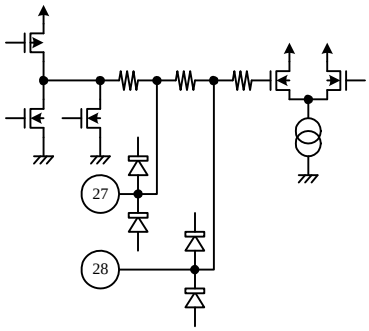
29	NC/FILTER		Filter input terminal	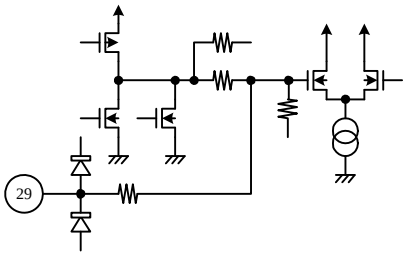
30	V_{DD}		Supply voltage	
31	ALCDETV		ALC setting voltage input terminal	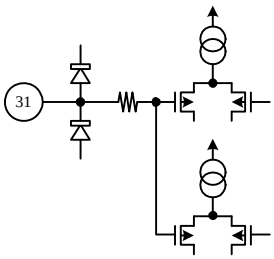

Sample Application Circuit (Mic-Gain = +38dB)

Stereo signal internal connection modes

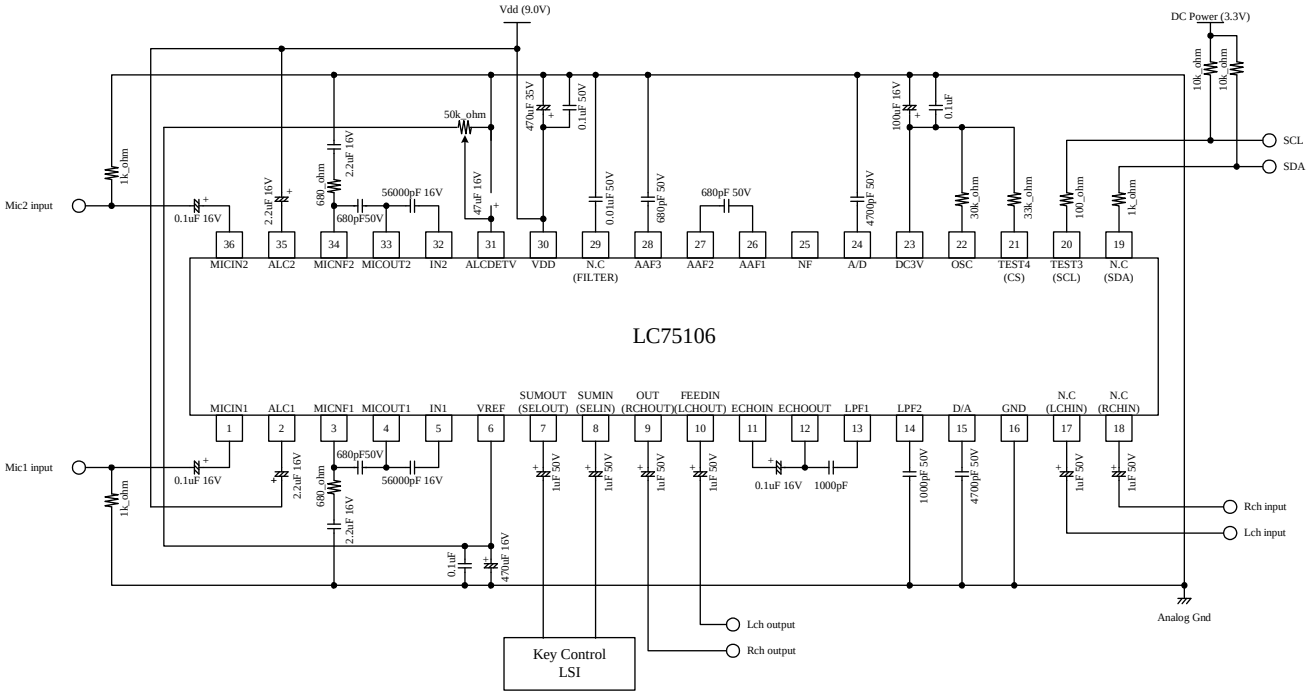

Stereo signal outside connection modes

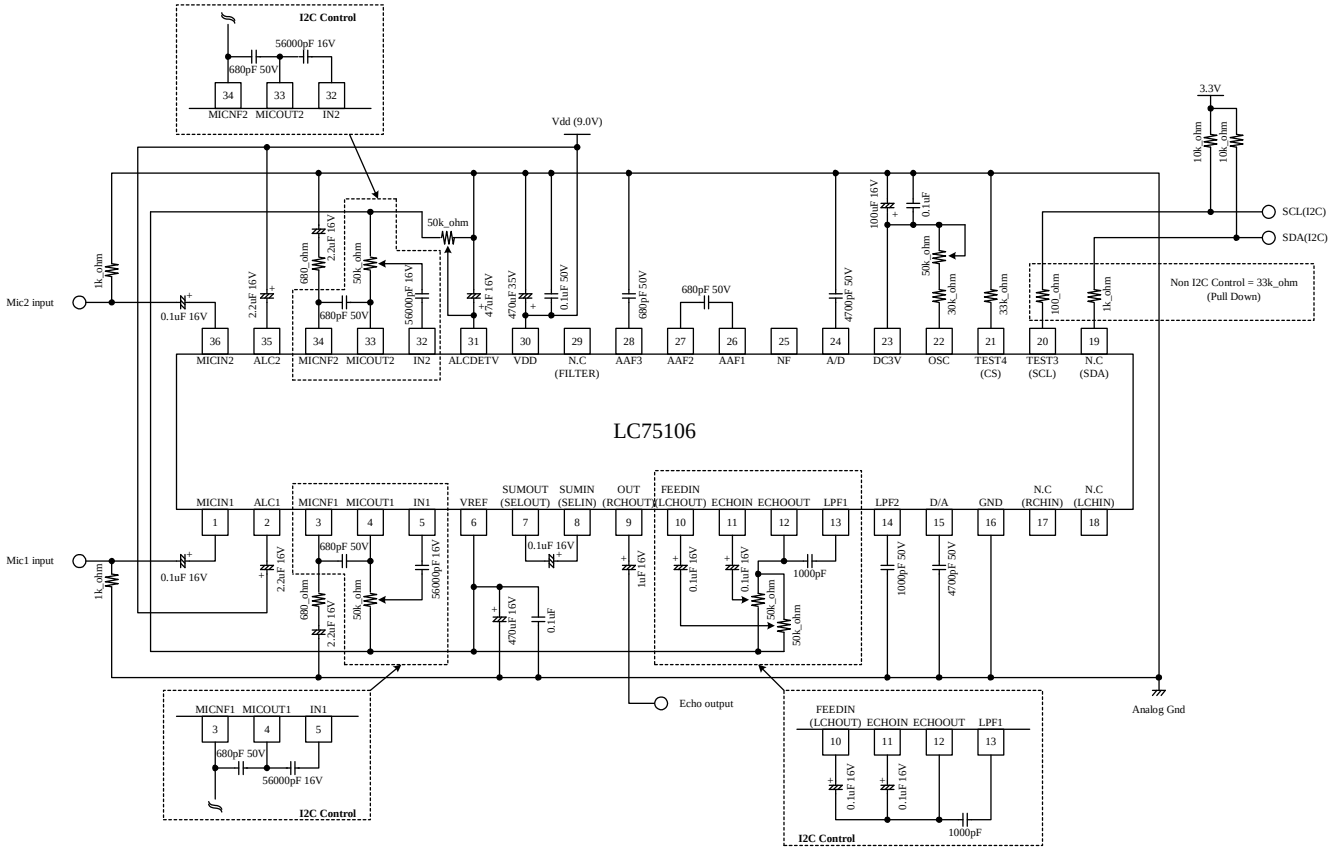

Control Data Structure (Serial Data Input)

The setting of LC75106 can be controlled with I^2C Bus.
All the settings can be controlled by I^2C Bus at the stereo signal internal connection modes (CS terminal = “H”), and all the volumes except the stereo source control can be set at the stereo signal outside connection modes (CS terminal = “L”).
The karaoke system can be made from external resistance by doing I^2C Bus Line in Pull Up at the stereo signal outside connection modes.

1) The explanation of I^2C Bus

I^2C Bus (Inter IC Bus) is the bus system which the PHILIPS company developed.
It does controls such as the start, the stop by two control signals of SDA (Serial Data) and SCL (Serial Clock).
The output of each signal is open drain and forms out of wired OR.

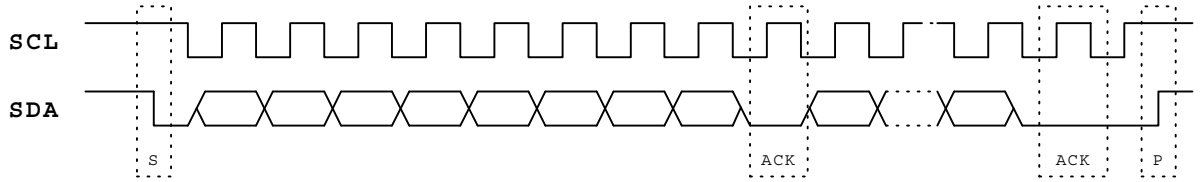

S; Start condition/P; Stop condition/ACK; Acknowledge

Data is transmitted in the MSB first.
1 unit is composed of 8 bits and ACK is put back from the slave to confirm.
Slave IC reads data with rising edge of SCL.
Master IC changes data by falling edge in SCL.

2) The control register

Table1 Slave Address

MSB							LSB
0	0	1	1	1	0	0	0

Note; LC75106 is reception exclusive use. It depends and it uses LSB by the “0” fixation.

• I^2C data

Function	Sub Address		Data							
	BINARY	HEX	D7	D6	D5	D4	D3	D2	D1	D0
Stereo line select/Mic1 volume	0000 0001	01	LD2	LD1	LD0	KEY	M1D3	M1D2	M1D1	M1D0
Mic2 volume/Test	0000 0010	02	M2D3	M2D2	M2D1	M2D0	TEST3	TEST2	TEST1	TEST0
Delay time/ECHO volume	0000 0011	03	0	DT2	DT1	DT0	0	ED2	ED1	ED0
Feed back volume	0000 0100	04	0	FB2	FB1	FB0	0	0	0	0

Control Data Description

No	Control Part/ Data	Description	Related Data
(1)	Line select LD2 LD1 LD0	•The data determines line output.	CS="H"

LD2	LD1	LD0	
0	0	0	Stereo output (Initial setting)
0	0	1	Lch Mono output
0	1	0	Rch Mono output
0	1	1	L+R/2 output
1	0	0	Vocal cut output
1	0	1	Reserve
1	1	0	Reserve
1	1	1	Reserve

No	Control Part/ Data	Description	Related Data
(2)	External key control switching data key	•This data determines route where external key control is used.	CS="H"

KEY	External key control
0	Invalid (Initial setting)
1	valid

No	Control Part/ Data	Description	Related Data
(3)	Microphone volume gain setting data M1D3 M1D2 M1D1 M1D0 M2D3 M2D2 M2D1 M2D0	•The data determines the gain of MICIN 1/2.	

M1D3 M2D3	M1D2 M2D2	M1D1 M2D1	M1D0 M2D0	
0	0	0	0	0dB (Initial setting)
0	0	0	1	-2dB
0	0	1	0	-4dB
0	0	1	1	-6dB
0	1	0	0	-8dB
0	1	0	1	-10dB
0	1	1	0	-12dB
0	1	1	1	-14dB
1	0	0	0	-16dB
1	0	0	1	-18dB
1	0	1	0	-20dB
1	0	1	1	-23dB
1	1	0	0	-26dB
1	1	0	1	-29dB
1	1	1	0	-32dB
1	1	1	1	-∞

No	Control Part/ Data	Description	Related Data
(4)	Delay time setting data DT2 DT1 DT0	•The data determines delay time for echo.	

DT2	DT1	DT0	
0	0	0	OFF
0	0	1	75ms (Initial setting)
0	1	0	100ms
0	1	1	125ms
1	0	0	150ms
1	0	1	175ms
1	1	0	200ms
1	1	1	Reserve

Continued to the next page.

Continued from the previous page.

<table>
<tr><th>No</th><th>Control Part/ Data</th><th>Description</th><th>Related Data</th></tr>
<tr><td>(5)</td><td>Echo volume gain setting data
ED2
ED1
ED0</td><td>•The data determines gain of echo output.
<table>
<tr><th>ED2</th><th>ED1</th><th>ED0</th><th></th></tr>
<tr><td>0</td><td>0</td><td>0</td><td>0dB (Initial setting)</td></tr>
<tr><td>0</td><td>0</td><td>1</td><td>-2dB</td></tr>
<tr><td>0</td><td>1</td><td>0</td><td>-4dB</td></tr>
<tr><td>0</td><td>1</td><td>1</td><td>-6dB</td></tr>
<tr><td>1</td><td>0</td><td>0</td><td>-9dB</td></tr>
<tr><td>1</td><td>0</td><td>1</td><td>-12dB</td></tr>
<tr><td>1</td><td>1</td><td>0</td><td>-15dB</td></tr>
<tr><td>1</td><td>1</td><td>1</td><td>-∞</td></tr>
</table></td><td></td></tr>
<tr><td>(6)</td><td>Feedback volume gain setting data
FB2
FB1
FB0</td><td>•The data determines feedback volume for echo.
<table>
<tr><th>FB2</th><th>FB1</th><th>FB0</th><th></th></tr>
<tr><td>0</td><td>0</td><td>0</td><td>-4dB (Initial setting)</td></tr>
<tr><td>0</td><td>0</td><td>1</td><td>-6dB</td></tr>
<tr><td>0</td><td>1</td><td>0</td><td>-9dB</td></tr>
<tr><td>0</td><td>1</td><td>1</td><td>-12dB</td></tr>
<tr><td>1</td><td>0</td><td>0</td><td>-∞</td></tr>
<tr><td>1</td><td>0</td><td>1</td><td>Reserve</td></tr>
<tr><td>1</td><td>1</td><td>0</td><td>Reserve</td></tr>
<tr><td>1</td><td>1</td><td>1</td><td>Reserve</td></tr>
</table></td><td></td></tr>
<tr><td>(7)</td><td>LSI test data
TEST3
TEST2
TEST1
TEST0</td><td>•Data for LSI testing
TEST3 to TEST0 should be set to ”0”.</td><td></td></tr>
</table>

Control with external parts

LC75106 can adjust the setting with external parts at the stereo signal outside connection modes.

(1) Delay time setting

The Delay time changes if the CR oscillation frequency with built-in LC75106 is adjusted.

Delay time	external Resistance	OSC Freq	Note
75ms	30kΩ	2.458MHz	
100ms	47kΩ	1.843MHz	
120ms	56kΩ	1.536MHz	
150ms	75kΩ	1.228MHz	
190ms	187kΩ	0.970MHz	

(2) Mic-Volume/ECHO Volume setting

When Mic Volume and ECHO Volume are set with external parts, it is possible to set it in the ratio of R1 and R2 as shown in the figure below.

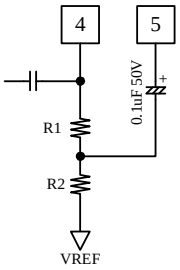

Gain	R1	R2	Note
-2dB	10.284kΩ	39.716kΩ	
-4dB	18.452kΩ	31.548kΩ	
-6dB	24.941kΩ	25.059kΩ	
-8dB	30.095kΩ	19.905kΩ	
-9dB	32.259kΩ	17.741kΩ	
-10dB	34.189kΩ	15.811kΩ	
-12dB	37.441kΩ	12.559kΩ	
-14dB	40.024kΩ	9.976kΩ	
-15dB	41.109kΩ	8.891kΩ	
-16dB	42.076kΩ	7.924kΩ	
-18dB	43.705kΩ	6.295kΩ	
-20dB	45.000kΩ	5.000kΩ	
-23dB	46.460kΩ	3.540kΩ	
-26dB	47.494kΩ	2.506kΩ	
-29dB	48.226kΩ	17.74kΩ	
-32dB	48.744kΩ	1.256kΩ	
-∞dB	50.000kΩ	0	

(3) Feed Back Volume setting

To prevent the oscillation, the Echo Feed Back signal input terminal has Gain of -4dB.

Therefore, please calculate in consideration of the attenuation of -4dB when you set Volume.

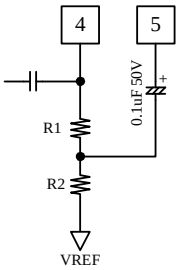

Gain	R1	R2	Note
-4dB	0	50.000kΩ	
-6dB	10.284kΩ	39.716kΩ	
-9dB	18.452kΩ	31.548kΩ	
-12dB	24.941kΩ	25.059kΩ	
-∞dB	50.000kΩ	0	

(4) Mic AMP Gain setting

Mic Amplifier Gain is adjusted according to the resistance value applied to 3pin and 34pin. And low frequency is cut off by connecting condenser.

Mic Amplifier has built-in ALC (Auto Level Control). Output level can be controlled by inputting the standard voltage to 31pin.

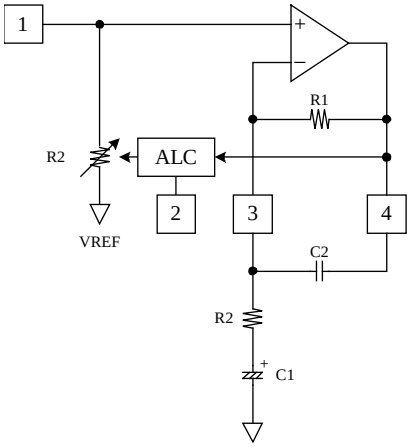

1) Mic AMP Gain setting

- R1 = 56.2kΩ

  [Mic Gain = 38dB]

  R2 = R1/Mic Gain

  =56.2k/79.4

  ≈ 680

2) fc setting

$$fc = \frac{1}{2\pi\ R1\ C1}$$

(5) ALC control voltage setting

1) ALC control voltage setting

When the ALC detecting voltage is input to 31pin, the ALC operation level can be set.

The setting method becomes as follows.

[V_{DD} = 9.0V/1Vrms setting]

$V_{DD}/2 = 9.0/2 = 4.5$

$1Vrms/2 = \sqrt{2} * 1 = 1.414V$

VALC setting voltage = 4.5 – 1.414 = 3.086V (DC)

ALC setting voltage can be set to put resistance between the terminal VREF and the terminal GND.

* The voltage of the terminal VREF depends on the power-supply voltage and changes.

2) ALC attack time/release time setting

The attack time and the release time of ALC can be set with the capacitor between 2pin - V_{DD} and 35pin - V_{DD}.

capacitor	Attack time	Release time	Note
2.2μF	About 60ms	About 6.0s	
1.0μF	About 35ms	About 2.5s	
0.1μF	About 16ms	About 0.25s	

ON Semiconductor and the ON logo are registered trademarks of Semiconductor Components Industries, LLC (SCILLC). SCILLC owns the rights to a number of patents, trademarks, copyrights, trade secrets, and other intellectual property. A listing of SCILLC's product/patent coverage may be accessed at www.onsemi.com/site/pdf/Patent-Marking.pdf. SCILLC reserves the right to make changes without further notice to any products herein. SCILLC makes no warranty, representation or guarantee regarding the suitability of its products for any particular purpose, nor does SCILLC assume any liability arising out of the application or use of any product or circuit, and specifically disclaims any and all liability, including without limitation special, consequential or incidental damages. "Typical" parameters which may be provided in SCILLC data sheets and/or specifications can and do vary in different applications and actual performance may vary over time. All operating parameters, including "Typicals" must be validated for each customer application by customer's technical experts. SCILLC does not convey any license under its patent rights nor the rights of others. SCILLC products are not designed, intended, or authorized for use as components in systems intended for surgical implant into the body, or other applications intended to support or sustain life, or for any other application in which the failure of the SCILLC product could create a situation where personal injury or death may occur. Should Buyer purchase or use SCILLC products for any such unintended or unauthorized application, Buyer shall indemnify and hold SCILLC and its officers, employees, subsidiaries, affiliates, and distributors harmless against all claims, costs, damages, and expenses, and reasonable attorney fees arising out of, directly or indirectly, any claim of personal injury or death associated with such unintended or unauthorized use, even if such claim alleges that SCILLC was negligent regarding the design or manufacture of the part. SCILLC is an Equal Opportunity/Affirmative Action Employer. This literature is subject to all applicable copyright laws and is not for resale in any manner.

OCEAN CHIPS
Океан Электроники
Поставка электронных компонентов

Компания «Океан Электроники» предлагает заключение долгосрочных отношений при поставках импортных электронных компонентов на взаимовыгодных условиях!

Наши преимущества:

- Поставка оригинальных импортных электронных компонентов напрямую с производств Америки, Европы и Азии, а так же с крупнейших складов мира;
- Широкая линейка поставок активных и пассивных импортных электронных компонентов (более 30 млн. наименований);
- Поставка сложных, дефицитных, либо снятых с производства позиций;
- Оперативные сроки поставки под заказ (от 5 рабочих дней);
- Экспресс доставка в любую точку России;
- Помощь Конструкторского Отдела и консультации квалифицированных инженеров;
- Техническая поддержка проекта, помощь в подборе аналогов, поставка прототипов;
- Поставка электронных компонентов под контролем ВП;
- Система менеджмента качества сертифицирована по Международному стандарту ISO 9001;
- При необходимости вся продукция военного и аэрокосмического назначения проходит испытания и сертификацию в лаборатории (по согласованию с заказчиком);
- Поставка специализированных компонентов военного и аэрокосмического уровня качества (Xilinx, Altera, Analog Devices, Intersil, Interpoint, Microsemi, Actel, Aeroflex, Peregrine, VPT, Syfer, Eurofarad, Texas Instruments, MS Kennedy, Miteq, Cobham, E2V, MA-COM, Hittite, Mini-Circuits, General Dynamics и др.);

Компания «Океан Электроники» является официальным дистрибьютором и эксклюзивным представителем в России одного из крупнейших производителей разъемов военного и аэрокосмического назначения **«JONHON»**, а так же официальным дистрибьютором и эксклюзивным представителем в России производителя высокотехнологичных и надежных решений для передачи СВЧ сигналов **«FORSTAR»**.

AVIC JONHON

«JONHON» (основан в 1970 г.)

Разъемы специального, военного и аэрокосмического назначения:

(Применяются в военной, авиационной, аэрокосмической, морской, железнодорожной, горно- и нефтедобывающей отраслях промышленности)

«FORSTAR» (основан в 1998 г.)

ВЧ соединители, коаксиальные кабели, кабельные сборки и микроволновые компоненты:

(Применяются в телекоммуникациях гражданского и специального назначения, в средствах связи, РЛС, а так же военной, авиационной и аэрокосмической отраслях промышленности).

FORSTAR®

Телефон: 8 (812) 309-75-97 (многоканальный)
Факс: 8 (812) 320-03-32
Электронная почта: ocean@oceanchips.ru
Web: http://oceanchips.ru/
Адрес: 198099, г. Санкт-Петербург, ул. Калинина, д. 2, корп. 4, лит. А