# Secondary-Side Controller with Current Share and Housekeeping

# ADM1041

## PRODUCT FEATURES

**Digital calibration via internal EEPROM**
**Supports SSI specification**
**Comprehensive fault detection**
**Reduced component count on secondary side**
**Standalone or microcontroller control**

## SECONDARY-SIDE FEATURES

**Generates error signal for primary-side PWM**
**Output voltage adjustment and margining**
**Current sharing**
**Current limit adjustment**
**OrFET control**
**Programmable soft-start slew rate**
**Standalone or microcontroller operation**
**Differential load voltage sense**
**AC mains undervoltage detection (ac sense)**
**Overvoltage protection**

## INTERFACE AND INTERNAL FEATURES

**SMBus interface ($I^2C$ compatible)**
**Low-drift precision 2.5 V reference**
**Voltage error amplifier**
**Differential current sense**
**Sense resistor or current transformer option**
**Overvoltage protection**
**Undervoltage protection**
**Overcurrent protection**
**Overtemperature protection**
**Start-up undervoltage blanking**
**Programmable digital debounce and delays**
**352-byte EEPROM available for field data**
**160-byte EEPROM for calibration**
**Ground continuity monitoring**

## APPLICATIONS

**Network servers**
**Web servers**
**Power supply control**

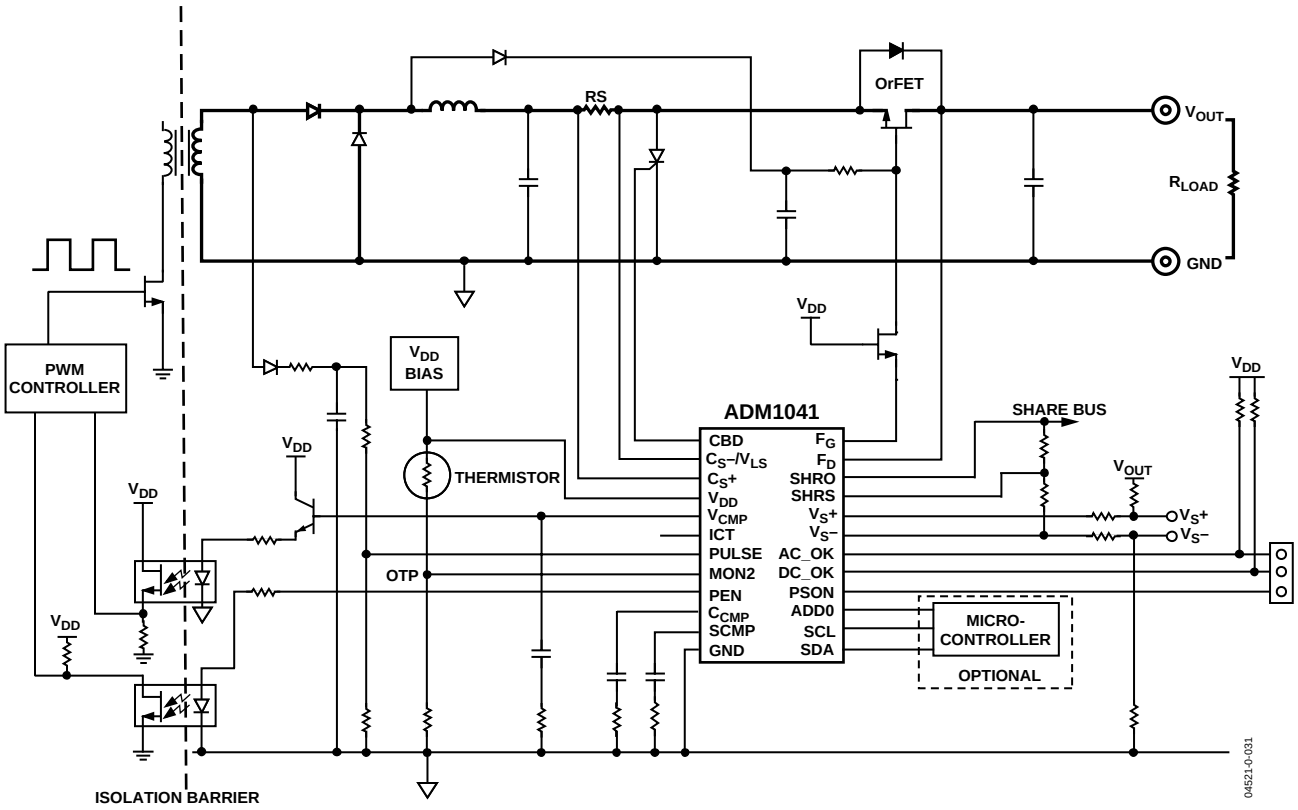


*Figure 1. Typical Application Circuit*

**Rev. A**

**Information furnished by Analog Devices is believed to be accurate and reliable. However, no responsibility is assumed by Analog Devices for its use, nor for any infringements of patents or other rights of third parties that may result from its use. Specifications subject to change without notice. No license is granted by implication or otherwise under any patent or patent rights of Analog Devices. Trademarks and registered trademarks are the property of their respective owners.**

**One Technology Way, P.O. Box 9106, Norwood, MA 02062-9106, U.S.A.**
**Tel: 781.329.4700** **www.analog.com**
**Fax: 781.326.8703**
**© 2004 Analog Devices, Inc. All rights reserved.**

# TABLE OF CONTENTS


Specifications ... 6
Absolute Maximum Ratings ... 13
ESD Caution ... 13
Pin Configuration and Function Descriptions ... 14
Terminology ... 17
Theory of Operation ... 19
Power Management ... 19
Gain Trimming and Configuration ... 19
Differential Remote Sense Amplifier ... 20
Set Load Voltage ... 20
Load Overvoltage (OV) ... 20
Local Voltage Sense ... 20
Local OverVoltage Protection (OVP) ... 20
Local UnderVoltage Protection (UVP) ... 20
False UV Clamp ... 20
Voltage Error Amplifier ... 21
Main Voltage Reference ... 21
Current Sense Amplifier ... 21
Current Sensing ... 22
Current Transformer Input ... 22
Current Sense Calibration ... 22
Current Limit Error Amplifier ... 22
Overcurrent Protection ... 22
Current Share ... 24
Current Share Offset ... 24
$I_{SHARE}$ Drive Amplifier ... 24
Differential Sense Amplifier ... 24
$I_{SHARE}$ Error Amplifier ... 24
$I_{SHARE}$ Clamp ... 24
Share_ok Detector ... 24
Pulse/$AC_{SENSE}$2 ... 27
Pulse ... 27
$AC_{SENSE}$ ... 27
OrFET Gate Drive ... 28
Oscillator and Timing Generators ... 30
Logic I/O and Monitor Pins ... 30
SMBus Serial Port ... 33
Microprocessor Support ... 33
Broadcasting ... 34
SMBus Serial Interface ... 34
General SMBus Timing ... 34
SMBus Protocols for RAM and EEPROM ... 36
SMBus Read Operations ... 38
SMBus Alert Response Address (ARA) ... 39
Support for SMBus 1.1 ... 39
Layout Considerations ... 39
Power-Up Auto-Configuration ... 39
Extended SMBus Addressing ... 40
Backdoor Access ... 40
Register Listing ... 41
Detailed Register Descriptions ... 42
Manufacturing Data ... 51
Microprocessor Support ... 52
Trim Table ... 54
Appendix A—Configuration Table ... 55
Appendix B—Test Name Table ... 61
Outline Dimensions ... 64
Ordering Guide ... 64


## REVISION HISTORY

3/04-Revision Sp0: Initial Version
5/04-Changed from Rev. Sp0 to Rev. A

## GENERAL DESCRIPTION

The ADM1041 is a secondary-side and management IC specifically designed to minimize external component counts and to eliminate the need for manual calibration or adjustment on the secondary-side controller. The principle application of this IC is to provide voltage control, current share, and housekeeping functions for single output in N+1 server power supplies.

The ADM1041 is manufactured with a 5 V CMOS process and combines digital and analog circuitry. An internal EEPROM provides added flexibility in the trimming of timing and voltage and selection of various functions. Programming is done via an SMBus serial port that also allows communication capability with a microprocessor or microcontroller.

The usual configuration using this IC is on a one per output basis. Outputs from the IC can be wire-ORed together or bused in parallel and read by a microprocessor. A key feature on this IC is support for an OrFET circuit when higher efficiency or power density is required.

## SAMPLE APPLICATION CIRCUIT DESCRIPTION

Figure 1 shows a sample application circuit using the ADM1041. The primary side is not detailed and the focus is on the secondary side of the power supply.

The ADM1041 controls the output voltage from the power supply to the designed programmed value. This programmed value is determined during power supply design and is digitally adjusted via the serial interface. Digital adjustment of the current sense and current limit is also calibrated via the serial interface, as are all of the internal timing specifications.

The control loop consists of a number of elements, notably the inputs to the loop and the output of the loop. The ADM1041 takes the loop inputs and determines what, if any, adjustments are needed to maintain a stable output. To maintain a stable loop, the ADM1041 uses three main inputs:

- Remote voltage sense
- Load current sense
- Current sharing information

In this example, a resistor divider senses the output current as a voltage drop across a sense resistor (RS) and feeds a portion into the ADM1041. Remote local voltage sense is monitored via $V_S$+ and $V_S$− pins. Finally, current sharing information is fed back via the share bus. These three elements are summed together to generate a control signal ($V_{CMP}$), which closes the loop via an optocoupler to the primary side PWM controller.

Another key feature of the ADM1041 is its control of an OrFET. The OrFET causes lower power dissipation across the ORing diode. The main function of the OrFET is to disconnect the power supply from the load in the event of a fault occurring during steady state operation, for example, if a filter capacitor or rectifier fails and causes a short. This eliminates the risk of bringing down the load voltage that is supplied by the redundant configuration of other power supplies. In the case of a short, a reverse voltage is generated across the OrFET. This reverse voltage is detected by the ADM1041 and the OrFET is shut down via the $F_G$ pin. This intervention prevents any interruption on the power supply bus. The ADM1041 can then be interrogated via the serial interface to determine why the power supply has shut down.

This application circuit also demonstrates how temperature can be monitored within a power supply. A thermistor is connected between the $V_{DD}$ and MON2 pins. The thermistor's voltage varies with temperature. The MON2 input can be programmed to trip a flag at a voltage corresponding to an overheating power supply. The resulting action may be to turn on an additional cooling fan to help regulate the temperature within the power supply.

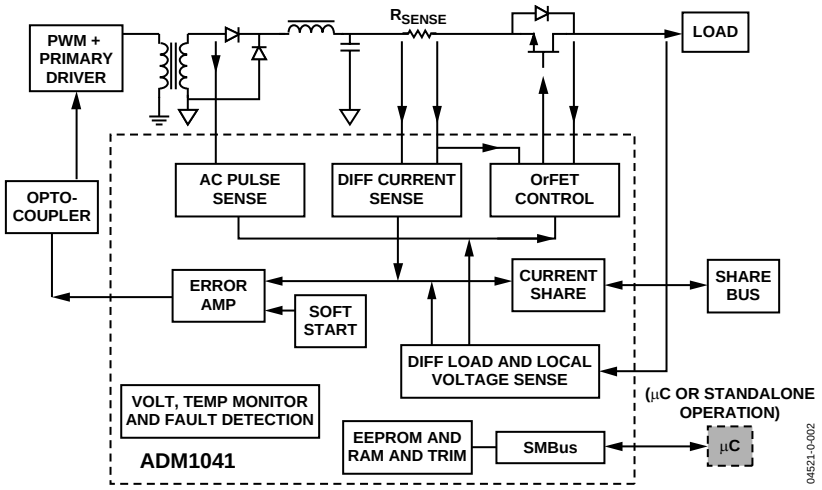


*Figure 2. Application Block Diagram*

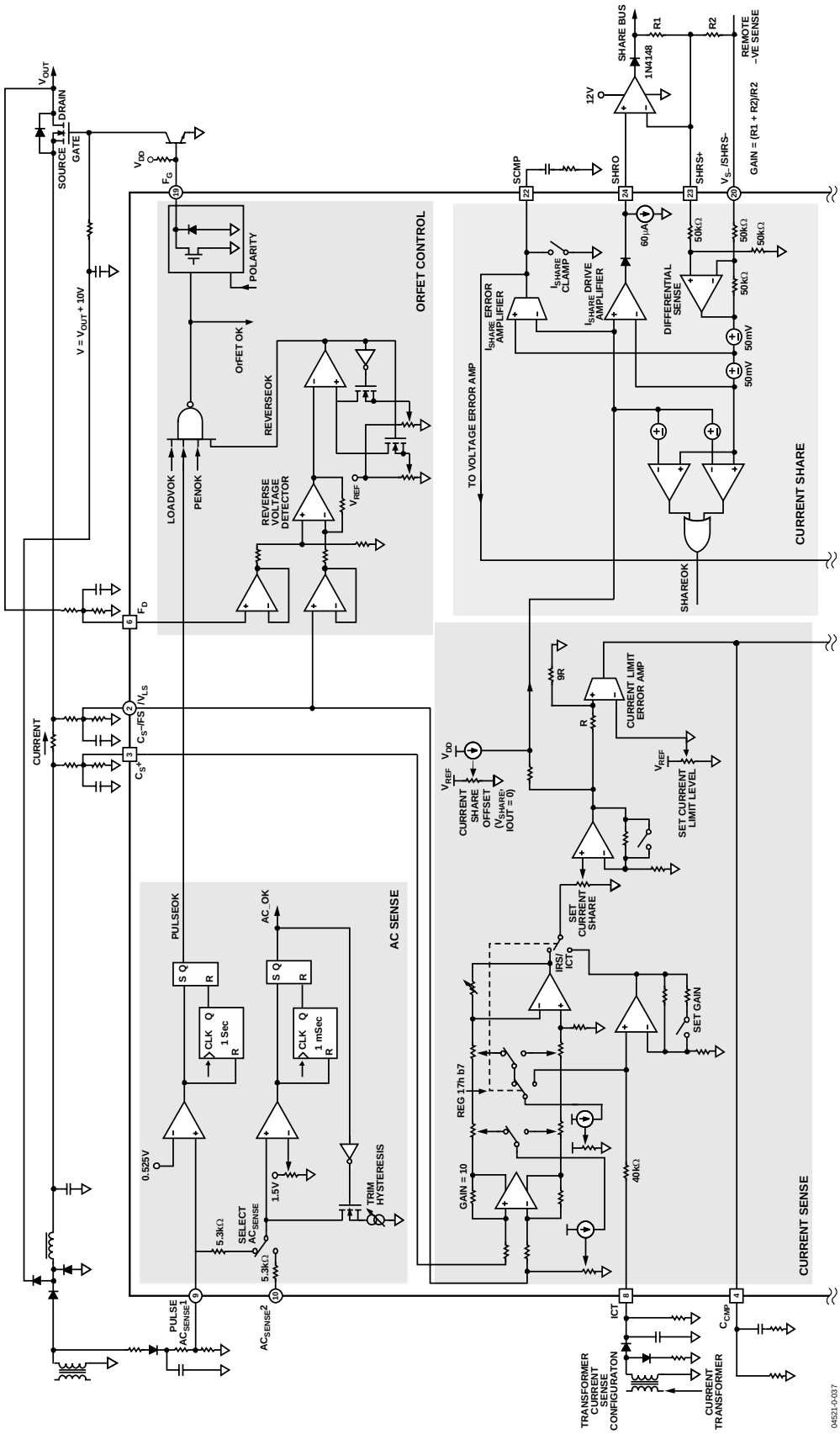


*Figure 3. Chip Diagram, Part 1*

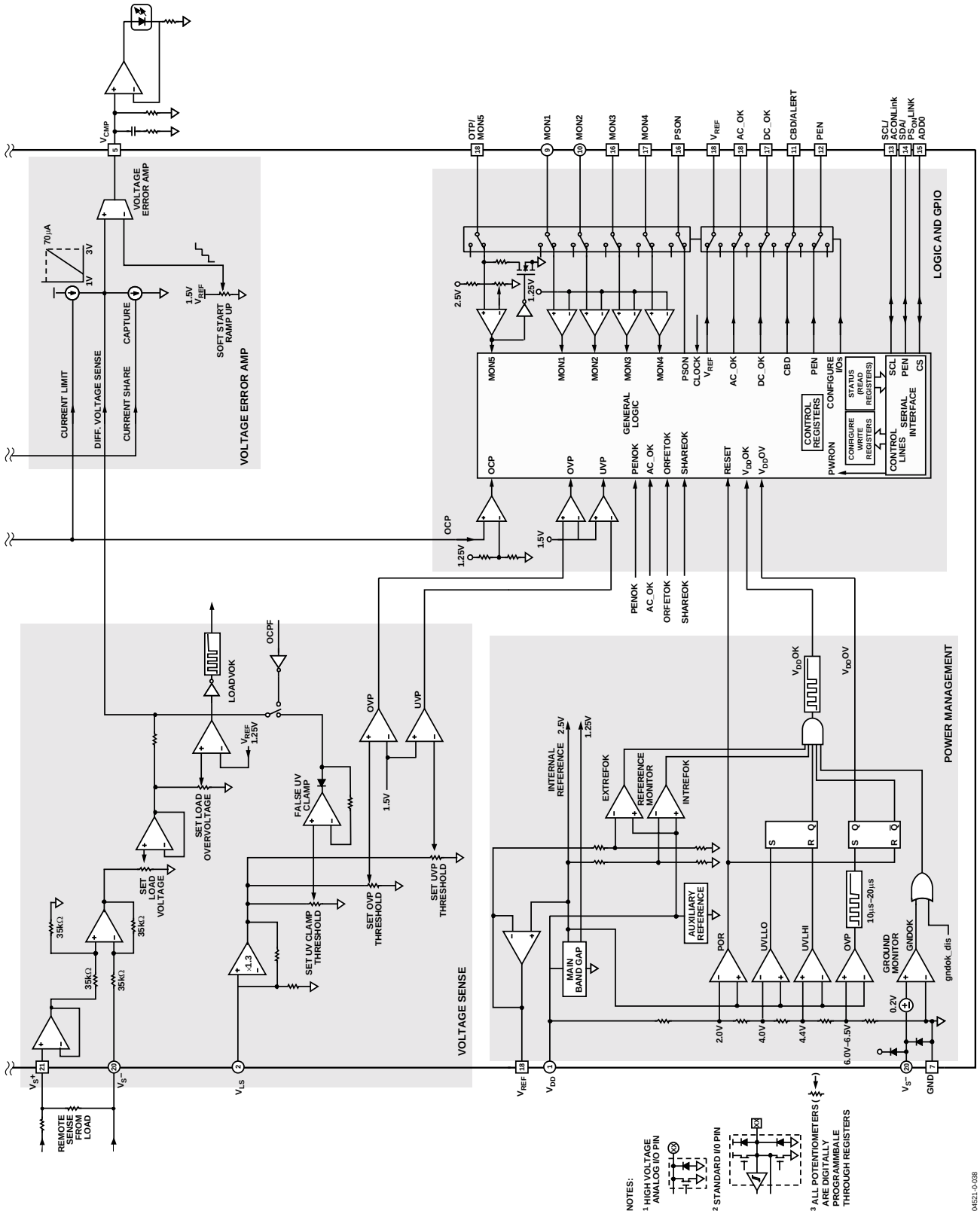


*Figure 4. Chip Diagram, Part 2*

# SPECIFICATIONS

$T_A$ = −40 to +85°C, $V_{DD}$ = 5 V ± 10%, unless otherwise noted.

**Table 1.**

| Parameter | Min | Typ | Max | Unit | Test Conditions/Comments |
|---|---|---|---|---|---|
| SUPPLIES | | | | | |
| $V_{DD}$ | 4.5 | 5.0 | 5.5 | V | |
| $I_{DD}$, Current Consumption | | 6 | 10 | mA | |
| Peak $I_{DD}$, during EEPROM Erase Cycle[1, 2] | | | 40 | mA | |
| UNDERVOLTAGE LOCKOUT, $V_{DD}$ | | | | | See Figure 9. |
| Start-Up Threshold | 4 | 4.3 | 4.5 | V | |
| Stop Threshold | 3.7 | 4 | 4.2 | V | |
| Hysteresis | | 0.3 | | V | |
| $V_{REF}$, 2.5 $V_{REFOUT}$ | | | | | Reg 0Fh[4:2] = 111. See Table 24. |
| Output Voltage | 2.49 | 2.50 | 2.51 | V | $I_{REF}$ = 1 mA, $T_A$ = 25°C |
| Line Regulation | −5 | 0 | +5 | mV | 4.5 V ≤ $V_{DD}$ ≤ 5.5 V |
| Load Regulation | −5 | 0 | +5 | mV | 0 mA ≤ $I_{REF}$ ≤ 2 mA |
| Temperature Stability[2] | | ±100 | | ppm/°C | $I_{REF}$ = 1 mA |
| Long-Term Stability[2] | | ±5 | | mV | Over 1,000 hr, $T_J$ = 125°C |
| Current Limit | | 10 | 20 | mA | $V_{REF}$ = 2.4 V |
| Output Resistance[2] | | 0.5 | | Ω | |
| Load Capacitance | | 1 | | nF | Recommended for stability |
| Ripple Due to Autozero[2] | | ±5 | | mV p-p | $V_{REF}$ refreshed at 30 kHz |
| POWER BLOCK PROTECTION | | | | | |
| $V_{DD}$ Overvoltage | 5.8 | 6.2 | 6.5 | V | |
| $V_{DD}$ Overvoltage Debounce | 10 | | 20 | µs | Latching |
| $V_{REF}$ Overvoltage | | 2.9 | | V | Internal |
| $V_{REFOUT}$ Undervoltage | | 2.1 | | V | External |
| Open Ground | 0.1 | 0.2 | 0.35 | V | $V_{GND}$ positive with respect to $V_S$− |
| Debounce | 100 | | 200 | µs | $V_{DD}$OK |
| POWER-ON RESET | | | | | |
| DC Level | 1.5 | 2.2 | 2.75 | V | $V_{DD}$ rising |
| DIFFERENTIAL LOAD VOLTAGE SENSE INPUT, ($V_S$−, $V_S$+) | | | | | See Figure 6. $V_{NOM}$ = ($V_S$+ − $V_S$−) $V_{NOM}$ is typically 2 V |
| $V_S$− Input Voltage | | | 0.5 | V | Voltage on Pin 20 |
| $V_S$+ Input Voltage | | | $V_{DD}$ − 2 | V | Voltage on Pin 21 |
| $V_S$− Input Resistance | | 35 | | kΩ | |
| $V_S$+ Input Resistance | 500 | | | kΩ | |
| $V_{NOM}$ Adjustment Range | | 1.7 to 2.3 | | V | |
| Set Load Voltage Trim Step | | 0.10 to 0.14 | | % | 1.7 V ≤ $V_{NOM}$ ≤ 2.3 V typ |
| | | 1.74 –> 3.18 | | mV | 8 bits, 255 steps |
| | | | | | Reg 19h[7:0]. See Table 34 |
| Set Load Overvoltage Trim Range | | 105 to 120 | | % | 1.7 V ≤ $V_{NOM}$ ≤ 2.3 V min |
| Set Load Overvoltage Trim Step | | 0.09 | | % | 8 bits, 255 step/s |
| | | 1.6 | | mV | Reg 08h[7:0]. See Table 17. |
| | | | | | $V_S$+ = 2.24 V |
| Recover from Load OV False to $F_G$ True | | 100 | | µs | Reg 03h[1:0] = 00. See Table 12. |
| | | 200 | | µs | Reg 03h[1:0] = 01. See Table 12. |
| | | 300 | | µs | Reg 03h[1:0] = 10. See Table 12. |
| | | 400 | | µs | Reg 03h[1:0] = 11. See Table 12. |
| Operate Time from Load OV to $F_G$ False | | 2 | | µs | |

| Parameter | Min | Typ | Max | Unit | Test Conditions/Comments |
|---|---|---|---|---|---|
| LOCAL VOLTAGE SENSE, $V_{LS}$, AND FALSE UV CLAMP | | | | | See Figure 9. |
| Input Voltage Range[3] | | 2.3 | $V_{DD}$–2 | V | Set by external resistor divider. |
| Stage Gain | | 1.3 | | | At $V_{LS}$ = 1.8 V |
| False UV Clamp, $V_{LS}$, Input Voltage Nominal, and Trim Range | 1.3 | 1.85 | 2.1 | V | |
| Clamp Trim Step | | 0.2 | | % | $V_{RANGE}$ |
| Clamp Trim Step | | 3.1 | | mV | 8 bits, 255 steps, Reg 18h[7:0]. See Table 33. |
| Local Overvoltage | 1.9 | 2.4 | 2.85 | V | |
| Nominal and Trim Range | | | | | |
| OV Trim Step | | 0.15 | | % | $V_{RANGE}$ |
| OV Trim Step | | 3.7 | | mV | 8 bits, 255 steps Reg 0Ah[7:0]. See Table 33. |
| Noise Filter, for OVP Function Only | 5 | | 25 | µs | |
| Local Undervoltage | 1.3 | 1.7 | 2.1 | V | |
| Nominal and Trim Range | | | | | |
| UV Trim Step | | 0.18 | | % | $V_{RANGE}$ |
| UV Trim Step | | 3.1 | | mV | 8 bits, 255 steps, Reg 09h[7:0]. See Table 18. |
| Noise Filter, for UVP Function Only | 300 | | 600 | µs | |
| VOLTAGE ERROR AMPLIFIER, $V_{CMP}$ | | | | | See Figure 14. |
| Reference Voltage $V_{REF_SOFT_START}$ | 1.49 | | 1.51 | V | $T_A$ = 25°C |
| Temperature Stability[2] | | ±100 | | µV/°C | −40°C ≤ $T_A$ ≤ 85°C |
| Long-Term Voltage Stability[2] | | ±0.2 | | % | Over 1,000 hr, $T_J$ = 125°C |
| Soft-start Period Range | 0 | | 40 | ms | Ramp is 7 bit, 127 steps |
| Set Soft-start Period | | 300 | | µs | Reg 10h[3:2] = 00. See Table 25. |
| | | 10 | | ms | Reg 10h[3:2] = 01. See Table 25. |
| | | 20 | | ms | Reg 10h[3:2] = 10. See Table 25. |
| | | 40 | | ms | Reg 10h[3:2] = 11. See Table 25. |
| Unity Gain Bandwidth, GBW | | 1 | | MHz | See Figure 11. |
| Transconductance | 1.9 | 2.7 | 3.5 | mA/V | At $I_{VCMP}$ = ±180 µA |
| Source Current | 250 | | | µA | At $V_{VCMP}$ > 1 V |
| Sink Current | 250 | | | µA | At $V_{VCMP}$ < $V_{DD}$ − 1 V |
| DIFFERENTIAL CURRENT SENSE INPUT, $C_S$−, $C_S$+ | | | | | Reg 17h[7] = 0. See Table 18. $I_{SENSE}$ mode. See Figure 13. |
| Common-Mode Range | 0 | | $V_{DD}$–2 | V | Set by external divider |
| External Divider Tolerance Trim Range (with respect to input) | | −5 | | mV | Reg 16h[5:3] = 000. See Table 31. |
| | | −10 | | mV | Reg 16h[5:3] = 001. See Table 31. |
| | | −20 | | mV | Reg 16h[5:3] = 010. See Table 31. |
| | | 5 | | mV | Reg 16h[5:3] = 100. See Table 31. |
| | | 10 | | mV | Reg 16h[5:3] = 101. See Table 31. |
| | | 20 | | mV | Reg 16h[5:3] = 110. See Table 31. |
| External Divider Tolerance Trim Step Size (with respect to input) | | 20 | | µV | $V_{CM}$ = 2.0 V |
| | | 39 | | µV | 8 bits, 255 steps |
| | | 78 | | µV | Reg 14h[7:0]. See Table 29. |

| Parameter | Min | Typ | Max | Unit | Test Conditions/Comments |
|---|---|---|---|---|---|
| DC Offset Trim Range (with respect to input) | | −8 | | mV | Reg 17h[2:0] = 000. See Table 32 . |
| | | −15 | | mV | Reg 17h[2:0] = 001. See Table 32. |
| | | −30 | | mV | Reg 17h[2:0] = 010. See Table 32. |
| | | 8 | | mV | Reg 17h[2:0] = 100. See Table 32. |
| | | 15 | | mV | Reg 17h[2:0] = 101. See Table 32. |
| | | 30 | | mV | Reg 17h[2:0] = 110. See Table 32. |
| DC Offset Trim Step Size | | 30 | | µV | $V_{CM}$ = 2.0 V, $V_{DIFF}$ = 0 V |
| (with respect to input) | | 50 | | µV | 8 bits, 255 steps |
| | | 120 | | µV | Reg 15h[7:0]. See Table 30. |
| CURRENT SENSE CALIBRATION | | | | | |
| Total Current Sense Error[2] (Gain and Offset) | | | | | $V_{CSCM}$ = 2.0V, 0°C ≤ $T_A$ ≤ 85 °C SHRS = SHRO = 2 V. Gain = 230x |
| | | ±3 | | % | Chopper ON |
| | | ±6 | | % | Chopper OFF |
| Gain Range ($I_{SENSE}$) | | | | | Input voltage range at $C_S$+, $C_S$− |
| Gain Setting 1 (Reg 16h[2:0] = 000) | | 65 | | V/V | 34.0 mV – 44.5 mV. Gain = 65× |
| Gain Setting 2 (Reg 16h[2:0] = 001) | | 85 | | V/V | 26.0 mV – 34.0 mV. Gain = 85× |
| Gain Setting 3 (Reg 16h[2:0] = 010) | | 110 | | V/V | 20.0 mV – 26.0 mV. Gain = 110× |
| Gain Setting 4 (Reg 16h[2:0] = 100) | | 135 | | V/V | 16.0 mV – 20.0 mV. Gain = 135× |
| Gain Setting 5 (Reg 16h[2:0] = 101) | | 175 | | V/V | 12.0 mV – 16.0 mV. Gain = 175× |
| Gain Setting 6 (Reg 16h[2:0] = 110) | | 230 | | V/V | 9.5 mV – 12.0 mV. Gain = 230× |
| Full Scale (No Offset) | | 2.0 | | V | $V_{ZO}$ = 0 |
| Attenuation Range | | 65 to 99 | | % | Reg 06h[7:1]. See Table 15. |
| Current Share Trim Step (at SHRO) | | 0.4 | | % | SHRS = SHRO = 1 V |
| | | 8 | | mV | 7 bits, 127 steps $I_{SHARE}$ slope |
| Gain Accuracy[2, 4], 40 mV at $C_S$+, $C_S$− | −5 | | +5 | % | 0 V ≤ $V_{CSCM}$ ≤ 0.3 V. Gain = 65× $V_{CSCM}$ = Input Common Mode |
| Gain Accuracy[2, 4], 20 mV at $C_S$+, $C_S$− | −5 | ±1 | +5 | % | $V_{CSCM}$ = 2.0V, 0°C ≤ $T_A$ ≤ 85°C Gain = 135× |
| Gain Accuracy[2, 4], 40 mV at $C_S$+, $C_S$− | −2.5 | ±0.5 | +2.5 | % | $V_{CSCM}$ = 2.0 V, 0°C ≤ $T_A$ ≤ 85°C Gain = 65× |
| SHARE BUS OFFSET | | | | | See Figure 13. |
| Current Share Offset Range | 1.25 | | | V | Reg 17h[7] = 1. See Table 32. Reg 17h[5] = 1. See Table 32. |
| Zero Current Offset Trim Step | | | | | 0 ≤ $V_{TRIM}$ ≤ 1.25 V |
| | | 0.4 | | % | 8 bits, 255 steps, $V_{CT}$ = 1.0 V |
| | | 5.5 | | mV | Reg 05h[7:0]. See Table 14. |
| CURRENT TRANSFORMER SENSE INPUT, $I_{CT}$ | | | | | Reg 17h[7] = 1. See Table 32. Reg 06h = FEh. See Table 15. |
| Gain Setting 0 | | 4.5 | | V/V | Reg 17h[5] = 0, $V_{SHARE}$ = 2 V. Table 31 |
| Gain Setting 1 | | 2.57 | | V/V | Reg 17h[5] = 1. See Table 32. |
| | | | | | Reg 15h = 05h, approx 1 µA. See Table 30. $V_{SHARE}$ = 2 V. |
| CT Input Sensitivity | 0.45 | 0.5 | 0.68 | V | Gain setting = 4.5 |
| CT Input Sensitivity | 0.79 | 1.0 | 1.20 | V | Gain setting = 2.57 |
| Input Impedance[2] | 20 | 50 | | kΩ | |
| Source Current | | 2.0 | | µA | See Current Transformer Input Section. |
| Source Current Step Size | | 170 | | nA | 15 steps Reg 15h[3:0]. See Table 30. |
| Reverse Current for Extended SMBus Addressing (Source Current)[5] | 3.5 | 5 | 7 | mA | See Figure 38. See Absolute Maximum Ratings. |

| Parameter | Min | Typ | Max | Unit | Test Conditions/Comments |
|---|---|---|---|---|---|
| CURRENT LIMIT ERROR AMPLIFIER | | | | | See Figure 13 |
| Current Limit Trim Range[2] | 105 | | 130 | % | After $I_{SHARE}$ calibration |
| Current Limit Trim Step | | 1.1 | | % | |
| Current Limit Trim Step | | 26.5 | | mV | $2.0 \leq V_{SHARE} \leq 2.8$ V typ. 5 bits, 31 steps. Reg 04h[7:3]. See Table 13. |
| Transconductance | 100 | 200 | 300 | µA/V | $I_{CCMP} = \pm 20$ µA. See Figure 12. |
| Output Source Current | | 40 | | µA | $V_{CCMP} = > 1$ V |
| Output Sink Current | | 40 | | µA | $V_{CCMP} = < V_{DD} - 1$ V |
| CURRENT SHARE DRIVER | | | | | See Figure 14. |
| Output Voltage[6] | $V_{DD} - 0.4$ | | | V | $R_L = 1$ kΩ, $V_{SHRS} \leq V_{DD} - 2$ V |
| Short Circuit Source Current | | | 55 | mA | |
| Source Current | | | 15 | mA | Current at which $V_{OUT}$ does not drop by more than 5% |
| Sink Current | | 60 | 100 | µA | $V_{SHARE} = 2.0$ V |
| CURRENT SHARE DIFFERENTIAL SENSE AMPLIFIER | | | | | See Figure 14. |
| $V_S-$ Input Voltage | | | 0.5 | V | Voltage on Pin 20 |
| $V_{SHRS}$ Input Voltage | | | $V_{DD} - 2$ | V | Voltage on Pin 23 |
| Input Impedance[2] | 65 | 100 | | kΩ | $V_{SHRS} = 0.5$ V, $V_S- = 0.5$ V |
| Gain | | 1.0 | | V/V | |
| CURRENT SHARE ERROR AMPLIFIER | | | | | |
| Transconductance, SHRS to SCMP | 100 | 200 | 300 | µA/V | $I_{SCMP} = \pm 20$ µA |
| Output Source Current | | 40 | | µA | $V_{SCMP} > 1$ V |
| Output Sink Current | | 40 | | µA | $V_{SCMP} < V_{DD} - 1$ V |
| Input Offset Voltage | 40 | 50 | 60 | mV | Master/slave arbitration |
| Share OK Window Comparator Threshold (Share Drive Error) | | | | | SHRS = 2 V ± $SHR_{THRESH}$ |
| | | ±100 | | mV | Reg 04h[1:0] = 00. See Table 13. |
| | | ±200 | | mV | Reg 04h[1:0] = 01. See Table 13. |
| | | ±300 | | mV | Reg 04h[1:0] = 10. See Table 13. |
| | | ±400 | | mV | Reg 04h[1:0] = 11. See Table 13. |
| CURRENT LIMIT | | | | | Figure 10. |
| Current Limit Control Lower Threshold | 1.3 | | | V | $V_{CCMP} = 0.7$ V, $V_S+ = 1.5$ V |
| Current Limit Control Upper Threshold | | | 3.5 | V | $V_S+ = 0$ V, $V_{SCMP} = 0$ V |
| CURRENT SHARE CAPTURE | | | | | $V_{SCMP} = 3.5$ V. |
| Current Share Capture Range | 0.7 | 1 | 1.3 | % | Reg 10h[5:4] = 00. See Table 25. |
| | 1.4 | 2 | 2.6 | % | Reg 10h[5:4] = 01. See Table 25. |
| | 2.1 | 3 | 3.9 | % | Reg 10h[5:4] = 10. See Table 25. |
| | 2.8 | 4 | 5.2 | % | Reg 10h[5:4] = 11. See Table 25. |
| Capture Threshold | 0.6 | 1.0 | 1.4 | V | |
| FET OR GATE DRIVE | | | | | Open-drain N-channel FET |
| Output Low Level (On) | | | 0.4 | V | $I_{IO} = 5$ mA |
| | | | 0.8 | V | $I_{IO} = 10$ mA |
| Output Leakage Current | −5 | | +5 | µA | |
| REVERSE VOLTAGE COMPARATOR, FS, FD | | | | | $V_{CS-} = FS$ |
| Common-Mode Range | 0.25 | 2.0 | $V_{DD} - 2$ | V | Voltage set by $C_S$ resistor divider Voltage on $C_S-$ pin. $T_A = 25°C$. |

| Parameter | Min | Typ | Max | Unit | Test Conditions/Comments |
|---|---|---|---|---|---|
| Reverse Voltage Detector Turn-Off Threshold | | | | | $V_{CS-}$ = 2 V for threshold specs |
| | | 100 | | mV | Reg 03h[7:6] = 00. See Table 12. |
| | | 150 | | mV | Reg 03h[7:6] = 01. See Table 12. |
| | | 200 | | mV | Reg 03h[7:6] = 10. See Table 12. |
| | | 250 | | mV | Reg 03h[7:6] = 11. See Table 12. |
| Reverse Voltage Detector Turn-On Threshold | | | | | $V_{CS-}$ = 2 V for threshold specs |
| | | 20 | | mV | Reg 03h[5:4] = 00. See Table 12. |
| | | 30 | | mV | Reg 03h[5:4] = 01. See Table 12. |
| | | 40 | | mV | Reg 03h[5:4] = 10. See Table 12. |
| | | 50 | | mV | Reg 03h[5:4] = 11. See Table 12. |
| FD Input Impedance | 500 | | | kΩ | |
| FS Input Impedance | | 20 | | kΩ | |
| $AC_{SENSE}1/AC_{SENSE}2$ COMPARATOR | | | | | Reg 12h[2] = 0 |
| | | | | | Reg 0Dh[3:2] = 00. See Table 22 . |
| (AC or Bulk Sense) | | | | | Reg 12h[2] = 1 |
| | | | | | Reg 0Eh[7:6] = 00. See Table 23. |
| Threshold Voltage | | 1.25 | | V | |
| Threshold Adjust Range | 1.10 | | 1.40 | V | Min: DAC = 0 |
| | | | | | Max: DAC = Full Scale |
| Threshold Trim Step | | 0.8 | | % | $1.10 \leq V_{TRIM} \leq 1.4$ V |
| | | 10 | | mV | 5 bits, 31 steps |
| | | | | | Reg 0Ch[7:3]. See Table 21. |
| Hysteresis Adjust Range | | 200–550 | | mV | $V_{ACSENSE} > 1$ V, $R_{THEVENIN}$ = 909R |
| Hysteresis Trim Step | | 50 | | mV | $200 \leq V_{TRIM} \leq 550$ mV. 7 steps<br>Reg 0Ch[2:0]. See Table 21. |
| Noise Filter | 0.6 | 1 | 1.2 | ms | |
| PULSE-IN | | | | | |
| Threshold Voltage | | 0.525 | | V | |
| PULSE_OK On Delay | | 1 | | µs | |
| PULSE_OK Off Delay | 0.8 | 1 | 1.2 | s | |
| OSCILLATOR | −5 | | +5 | % | Unless otherwise specified |
| OCP | | | | | |
| OCP Threshold Voltage[2] | 0.3 | 0.5 | 0.7 | V | Force $C_{CMP}$ for drop in $V_{CMP}$ |
| | | | | | Reg 11h[2] = 0. See Table 26. |
| OCP Shutdown Delay Time (Continuous Period in Current Limit) | | 1 | | s | Reg 12h[4:3] = 00. See Table 27. |
| | | 2 | | s | Reg 12h[4:3] = 01. See Table 27. |
| | | 3 | | s | Reg 12h[4:3] = 10. See Table 27. |
| | | 4 | | s | Reg 12h[4:3] = 11. See Table 27. |
| OCP Fast Shutdown Delay Time | 0 | | 100 | ms | Reg 11h[2] = 1. See Table 26. |
| | | | | | $VC_{CMP}$ = 1.5 V |
| MON1, MON2, MON3, MON4 | | | | | |
| Sense Voltage | 1.21 | 1.25 | 1.29 | V | |
| Hysteresis | | 0.1 | | V | |
| OVP Noise Filter | 5 | | 25 | µs | |
| UVP Noise Filter | 300 | | 600 | µs | |
| OTP (MON5) | | | | | Reg 0Fh[4:2] = 01x or 10x. Table 24. |
| Sense Voltage Range | 2.2 | | 2.45 | V | |
| OTP Trim Step | | 24 | | mV | $2.1 \leq V_{TRIM} \leq 2.45$ V |
| | | | | | 4 bits, 15 steps, Reg 0Bh[7:4]. |
| | | | | | See Table 20. |
| Hysteresis | 100 | 130 | 160 | µA | $V_{OTP}$ = 2 V |

| Parameter | Min | Typ | Max | Unit | Test Conditions/Comments |
|---|---|---|---|---|---|
| OVP Noise Filter | 5 | | 25 | µs | Reg 0Fh[4:2] = 010 or 100. See Table 24. |
| UVP Noise Filter | 300 | | 600 | µs | Reg 0Fh[4:2] = 011 or 101. See Table 24. |
| PSON[7] | | | | | Reg 0Eh[4:2] = 00x. See Table 23. |
| Input Low Level[8] | | | 0.8 | V | |
| Input High Level[8] | 2.0 | | | V | |
| Debounce | | 80 | | ms | Reg 0Fh[1:0] = 00. See Table 24. |
| | | 0 | | ms | Reg 0Fh[1:0] = 01. See Table 24. |
| | | 40 | | ms | Reg 0Fh[1:0] = 10. See Table 24. |
| | | 160 | | ms | Reg 0Fh[1:0] = 11. See Table 24. |
| PEN[7], DC_OK[7], CBD, AC_OK | | | | | |
| Open-Drain N-Channel Option | | | | | |
| Output Low Level = On[8] | | | 0.4 | V | $I_{SINK}$ = 4 mA |
| Open-Drain P-Channel | | | | | $V_{OH_PEN}$ |
| Output High Level = On[8] | 2.4 | | | V | $I_{SOURCE}$ = 4 mA |
| Leakage Current | −5 | | +5 | µA | |
| DC_OK[7] | | | | | Reg 0Fh[7:5] = 00x. See Table 24. |
| DC_OK, On Delay (Power-On and OK Delay) | | 400 | | ms | Reg 0Eh[1:0] = 00. See Table 23. |
| | | 200 | | ms | Reg 0Eh[1:0] = 01.See Table 23. |
| | | 800 | | ms | Reg 0Eh[1:0] = 10. See Table 23. |
| | | 1600 | | ms | Reg 0Eh[1:0] = 11. See Table 23. |
| DC_OK, Off Delay (Power-Off Early Warning) | | 2 | | ms | Reg 10h[7:6] = 00. See Table 25. |
| | | 0 | | ms | Reg 10h[7:6] = 01. See Table 25. |
| | | 1 | | ms | Reg 10h[7:6] = 10. See Table 25. |
| | | 4 | | ms | Reg 10h[7:6] = 11. See Table 25. |
| SMBus, SDL/SCL | | | | | |
| Input Voltage Low[8] | | | 0.8 | V | |
| Input Voltage High[8] | 2.2 | | | V | |
| Output Voltage Low[8] | | | 0.4 | V | $V_{DD}$ = 5 V, $I_{SINK}$ = 4 mA |
| Pull-Up Current | 100 | | 350 | µA | |
| Leakage Current | −5 | | +5 | µA | |
| ADD0, HARDWIRED ADDRESS BIT | | | | | |
| ADD0 Low Level[8] | | | 0.4 | V | |
| ADD0 Floating | | $V_{DD}/2$ | | V | Floating |
| ADD0 High[8] | $V_{DD}$ − 0.5 | | | V | |
| SERIAL BUS TIMING | | | | | See Figure 5. |
| Clock Frequency | | | 400 | kHz | |
| Glitch Immunity, $t_{SW}$ | | | 50 | ns | |
| Bus Free Time, $t_{BUF}$ | 4.7 | | | µs | |
| Start Setup Time, $t_{SU;STA}$ | 4.7 | | | µs | |
| Start Hold Time, $t_{HD;STA}$ | 4 | | | µs | |
| SCL Low Time, $t_{LOW}$ | 4.7 | | | µs | |
| SCL High Time, $t_{HIGH}$ | 4 | | | µs | |
| SCL, SDA Rise Time, $t_R$ | | | 1000 | ns | |
| SCL, SDA Fall Time, $t_F$ | | | 300 | ns | |
| Data Setup Time, $t_{SU;DAT}$ | 250 | | | ns | |
| Data Hold Time, $t_{HD;DAT}$ | 300 | | | ns | |
| EEPROM RELIABILITY | | | | | |
| Endurance[9] | 100 | 250 | | k cycles | |
| Data Retention[10] | 100 | | | Years | |

[1] This specification is a measure of $I_{DD}$ during an EEPROM page erase cycle. The current is a dynamic. Refer to Figure 29 for a typical $I_{DD}$ plot during an EEPROM page erase.
[2] Specification is not production tested, but is supported by characterization data at initial product release.
[3] Four external divider resistors are the same ration, which is selected to produce 2.0 V nominal at Pin 21 while at zero load current. Recommended values are

| | 3.3 V | 5.0 V | 12 V |
|---|---|---|---|
| $R_{TOP}$ | 680R | 1K.5 | 5K1 |
| $R_{BOTTOM}$ | 1K | 1K | 1K |

[4] Chopper off.
[5] The maximum specification here is the maximum source current of Pin 8 as specified by the Absolute Maximum Ratings.
[6] All internal amplifiers accept inputs with common range from GND to $V_{DD}$ − 2 V. The output is rail to rail but the input is limited to GND to $V_{DD}$ − 2 V. See Figure 6.
[7] These pins can be configured as open-drain N-channel or P-channel, (except PSON) and as normal or inverted logic polarity. Refer to Table 45.
[8] A logic true or false is defined strictly according to the signal name. Low and high refer to the pin or signal voltages.
[9] Endurance is qualified to 100,000 cycles as per JEDEC std. 22 method A117, and measured at −40°C, +25°C, and +85°C. Typical endurance at 25°C is 250,000 cycles.
[10] Retention lifetime equivalent at junction temperature ($T_J$) = 55°C as per JEDEC std. 22 method A117. Retention lifetime based on an activation energy of 0.6 V. Derates with junction temperature.

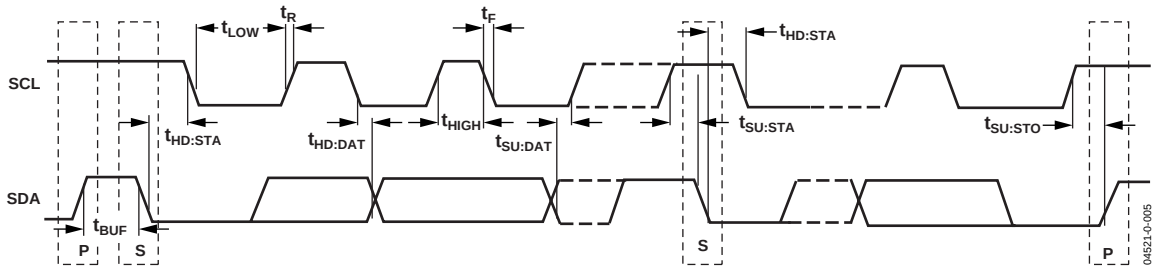


*Figure 5. Serial Bus Timing Diagram*

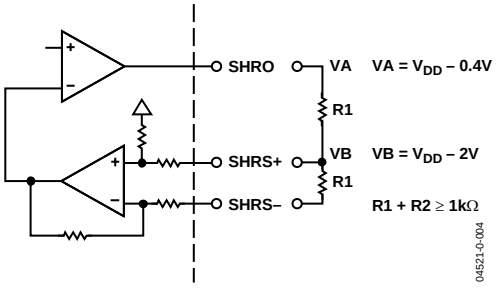


*Figure 6. Amplifier Inputs and Outputs*

# ABSOLUTE MAXIMUM RATINGS

**Table 2.**

| Parameter | Rating |
|---|---|
| Supply Voltage (Continuous), $V_{DD}$ | 6.5 V |
| Data Pins SDA, SCL, $V_{DATA}$ | $V_{DD}$ + 0.5 V, GND – 0.3 V |
| Continuous Power at 25°C, $P_{D\text{-}QSOP24}$ | 450 mW |
| Operating Temperature, $T_{AMB}$ | –40°C to +85°C |
| Junction Temperature, $T_J$ | 150°C |
| Storage Temperature, $T_{STG}$ | –60°C to +150°C |
| Lead Temperature (Soldering, 10 Seconds), $T_L$ | 300°C |
| ESD Protection on All Pins, $V_{ESD}$ | 2 kV |
| Thermal Resistance, Junction to Air, $\theta_{JA}$ | 150°C/W |
| $I_{CT}$ Source Current[1] | 7 mA |

[1] This is the maximum current that can be sourced out from Pin 8 ($I_{CT}$ pin).

**Thermal Characteristics**

24-Lead QSOP Package:
$\theta_{JA}$ = 150°C/W

Stresses above those listed under Absolute Maximum Ratings may cause permanent damage to the device. This is a stress rating only; functional operation of the device at these or any other conditions above those indicated in the operational section of this specification is not implied. Exposure to absolute maximum rating conditions for extended periods may affect device reliability.

## ESD CAUTION

ESD (electrostatic discharge) sensitive device. Electrostatic charges as high as 4000 V readily accumulate on the human body and test equipment and can discharge without detection. Although this product features proprietary ESD protection circuitry, permanent damage may occur on devices subjected to high energy electrostatic discharges. Therefore, proper ESD precautions are recommended to avoid performance degradation or loss of functionality.

# PIN CONFIGURATION AND FUNCTION DESCRIPTIONS

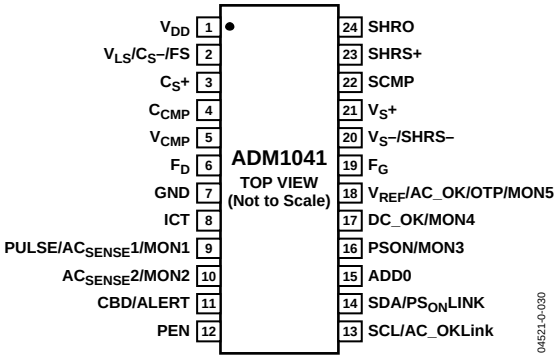


*Figure 7. Pin Configuration*

**Table 3. Pin Function Descriptions**

| Pin No. | Mnemonic | Description |
|---|---|---|
| 1 | $V_{DD}$ | Positive Supply for the ASIC. Normal range is 4.5 V to 5.5 V. Absolute maximum rating is 6.5 V. |
| 2 | $V_{LS}/C_S–/FS$ | Inverting Differential Current Sense Input, Local Voltage Sense Pin, and OrFET Source. These three functions are served by a common divider. The local voltage sense input is used for local overvoltage and undervoltage sensing. This pin also provides an input to the false UV clamp that prevents shutdown during an external load overvoltage condition. When supporting an OrFET circuit, this pin represents the FET source and is the inverting input of a differential amplifier looking for the presence of a reverse voltage across the FET, which might indicate a failure mode. |
| 3 | $C_S+$ | Noninverting Differential Current Sense Input. The differential sensitivity of $C_S+$ and $C_S–$ is normally around 10 mV to 40 mV at the input to the ASIC. Nulling any external divider offset is achieved by injecting a trimmable amount of current into either the inverting or noninverting input of the second stage of the current sense amplifier. A compensation circuit is used to ensure the amount of current for zero-offset tracks the common-mode voltage. Nulling of any amplifier offset is done in a similar manner except that it does not track the common-mode voltage. |
| 4 | $C_{CMP}$ | Current Error Amplifier Compensation. This pin is the output of the current limit transconductance error amplifier. A series resistor and a capacitor to ground are required for loop compensation. |
| 5 | $V_{CMP}$ | Voltage Error Amplifier Compensation. This is the output of a voltage error transconductance amplifier. Compensate with a series capacitor and resistor to ground. An external emitter-follower or buffer is typically used to drive an optocoupler. Output voltage positioning may be obtained by placing a second resistor directly to ground. Refer to Analog Devices applications notes on voltage positioning. |
| 6 | FD | A divider from the OrFET drain is connected here. A differential amplifier is then used to detect the presence of a reverse voltage across the FET, which indicates a fault condition and causes the OrFET gate to be pulled low. |
| 7 | GND | Ground. This pin is double bonded for extra reliability. If the ground pin goes positive with respect to the remote sense return ($V_S–$) for a sustained period indicating that the negative remote sense line is disconnected, PEN will be disabled. |
| 8 | ICT | Input for Current Transformer. The sensitivity of this pin is suitable for the typical 0.5 V to 1 V signal that is normally available. If this function is enabled, the $C_S+$ amplifier is disabled. This pin is also used for extended SMBus addressing, i.e., pulled below ground to allow additional SMBus addresses. |
| 9 | PULSE/$AC_{SENSE}$1/MON1 | Pulse Present, AC/Bulk Sense 1, or Monitor 1 Input.<br>PULSE: This tells the OrFET circuit that the voltage from the power transformer is normal. A peak hold allows the OrFET circuit to pass through the pulse skipping that occurs with very light loads but turns off the circuit about one second after the last pulse is recognized.<br>$AC_{SENSE}$1: This sense function also uses the peak voltage on this pin to measure the bulk capacitor voltage. If too low, AC_OK and DC_OK can warn of an imminent loss of power. Threshold level and hysteresis can be trimmed. When not selected, $AC_{SENSE}$1 defaults to true.<br>MON1: When MON1 is selected for this pin, its input is compared against a 1.25 V comparator that could be used for monitoring a post regulated output; includes overvoltage, undervoltage, and overtemperature conditions. |

| Pin No. | Mnemonic | Description |
|---|---|---|
| 10 | $AC_{SENSE}2$/MON2 | AC/Bulk Sense Input 2 or Monitor 2 Input.<br>$AC_{SENSE}2$: This alternative $AC_{SENSE}$ input can be used when the $AC_{SENSE}$ source must be different from that used for the OrFET. It also allows dc and opto-coupled signals that are not suitable for the OrFET control.<br>MON2: When MON2 is selected for this pin, its input is compared against a 1.25 V comparator that could be used for monitoring a post regulated output; includes overvoltage, undervoltage, and overtemperature conditions. |
| 11 | CBD/ALERT | CBD: The crowbar drive pin allows implementation of a fast shutdown in case of a load overvoltage fault. The pin can be configured as an open-drain N-channel or P-channel and is suitable for driving a sensitive gate SCR crowbar. An external transistor is required if a high gate current is needed. Either polarity may be selected.<br>ALERT: This pin can be configured to provide an ALERT function in microprocessor-supported applications whereby any of several ICs in a redundant system that detects a problem can interrupt and shut down the power supply. An alternative use is as a general-purpose logic output signal. |
| 12 | PEN | Power Enable. This pin can be configured as an open-drain N-channel or P-channel that typically drives the PEN optocoupler. Providing that the PSON pin has been asserted to turn the output on, and that there are no faults, this pin drives an optocoupler on enabling the primary PWM circuit. Either polarity may be selected. |
| 13 | SCL/AC_OKLink | SCL: SMBus Serial Clock Input.<br>AC_OKLink: In non-microprocessor applications, this pin can be programmed to give the status of $AC_{SENSE}$ to all the ICs on the same bus. The main effect is to turn on undervoltage blanking whenever the sense circuit monitoring ac or bulk dc detects a low voltage. |
| 14 | SDA/$PS_{ON}$LINK | SDA: SMBus Serial Data Input and Output.<br>$PS_{ON}$LINK: In non-microprocessor applications, this pin can be programmed to provide the PSON status to other ICs. This allows just one IC to be the PSON interface to the host system, or the $PS_{ON}$LINK itself can be the PSON interface. |
| 15 | ADD0 | Chip Address Pin. There are three addresses possible using this pin, which are achieved by tying ADD0 to ground, tying to $V_{DD}$, or being left to float. One address bit is available via programming at the device/daughter card level so the total number of addressable ICs can be increased to six. |
| 16 | PSON/MON3 | PSON: In non-microprocessor configurations, this is power supply on. As a standard I/O, this pin is rugged enough for direct interface with a customer's system. Either polarity may be selected.<br>MON3: When MON3 is selected for this pin, its input is compared against a 1.25 V comparator that could be used for monitoring a post-regulated output; includes overvoltage, undervoltage, and overtemperature conditions. |
| 17 | DC_OK/MON4 | DC_OK: This pin is the output of a general-purpose digital I/O that can be configured as open-drain N-channel or open-drain P-channel suitable for wire-ORing with other ICs and direct interfacing with a customer's system. Either polarity may be selected.<br>MON4: When MON4 is selected for this pin, its input is compared against a 1.25 V comparator that could be used for overtemperature protection and for monitoring a post-regulated output; includes overvoltage, undervoltage, and overtemperature conditions. |
| 18 | $V_{REF}$/AC_OK/OTP/MON5 | Voltage Reference, Buffered Output, Overtemperature Protection, or Monitor 5.<br>$V_{REF}$: This is a 2.5 V precision reference voltage capable of sourcing 2 mA. This function is continuously monitored, and if the voltage falls below 2.0 V, PEN is disabled. Forcing this pin's voltage does not affect the integrity of the internal reference.<br>AC_OK: This option can be configured as N-channel or P-channel and as normal or inverted polarity. At system level, a true AC_OK is used to indicate that the primary bulk voltage is high enough to support the system, and when false, that dc output is about to fail.<br>MON5: A further option is to configure this as an analog input, MON5, with a flexible hysteresis and trimmable 2.5 V reference that makes this pin particularly suitable for overtemperature protection (OTP) sensing. Since hysteresis uses a switched 100 µA current source, hysteresis can be adjusted via the source impedance of the external circuit. It can also be used for overvoltage and undervoltage functions. |
| 19 | $F_G$ | FET Gate Enable. When supporting an OrFET circuit, this is the gate drive pin. Since the open-drain voltage on the chip is limited to $V_{DD}$, an external level shifter is required to drive the higher gate voltages suitable for the OrFET. This pin is configured as an open-drain N-channel. Either output polarity, low = on or low = off, may be selected. |
| 20 | $V_S$–/SHRS– | This pin is used as the ground input reference for the current share and load voltage sense circuits. It should be tied to ground at the common remote sense location. The input impedance is about 35 kΩ to ground. |

| Pin No. | Mnemonic | Description |
|---|---|---|
| 21 | $V_S$+ | This pin is the positive remote load voltage sense input and is normally divided down from the power supply output voltage to 2.0 V at no load using an external voltage divider. The input impedance is high. |
| 22 | SCMP | Output of the Current Share Transconductance Error Amplifier. Compensation is a series capacitor and resistor to ground. While $V_{DD}$ is normal and PEN is false, this pin is clamped to ground. When the converter is enabled (PEN true) and the clamp is released, the compensation capacitor charges providing a slow walk-in. The error amplifier input has a built-in bias so that all slaves in a parallel supply system do not compete with the master for control of the share bus. |
| 23 | SHRS+ | Current Share Sense. This is the noninverting input of a differential sense amplifier looking at the voltage on the share bus. For testing purposes, this pin is normally connected to SHRO. Calibration always expects this pin to be at 2.0 V with respect to SHRS–/$V_S$–. If a higher share voltage is required, a resistor divider from SHRO or an additional gain stage, as shown in the application notes, must be used. |
| 24 | SHRO | Current Share Output. This output is capable of driving the share bus of several power supplies between 0 V and $V_{DD}$ – 0.4 V (10 kΩ bus pull-down in each supply). Where a higher share bus voltage is required, an external amplifier is necessary. The current share output from the supply which, when bused with the share output of other power supplies working in parallel, allows each of the supplies to contribute essentially equal currents to the load. |

**Table 4. Default Pin States during EEPROM Download**

| Pin No. | Mnemonic | State |
|---|---|---|
| 11 | CBD | High impedance (Hi-Z) at power-up and until the end of the EEPROM download (approximately 20 ms). This pin is reconfigured at the end of the EEPROM download. |
| 12 | PEN | High impedance (Hi-Z) at power-up and until the end of the EEPROM download (approximately 20 ms). This pin is reconfigured at the end of the EEPROM download. |
| 17 | DC_OK | Active low (low if DC_OK true) at power-up. This pin is reconfigured during the EEPROM download. |
| 18 | AC_OK | Active low (low if DC_OK true) at power-up. This pin is reconfigured during the EEPROM download. |
| 19 | $F_G$ | High impedance (Hi-Z) at power-up and until the end of the EEPROM download (approximately 20 ms). This pin is reconfigured at the end of the EEPROM download. |

# TERMINOLOGY

**Table 5.**

| Mnemonic | Description |
|---|---|
| POR | Power-On Reset. When $V_{DD}$ is initially applied to the ASIC, the POR function clears all latches and puts the logic into a state that allows a clean start-up. |
| UVL | Undervoltage Lockout. This is used on $V_{DD}$ to prevent spurious modes of operation that might occur if $V_{DD}$ is below a specific voltage. |
| CVMode | Constant Voltage Mode. This is the normal mode of operation of the power supply main output. The output voltage remains constant over the whole range of current specified. |
| CCMode | Constant Current Mode. This mode of operation occurs when the output is overloaded until or unless a shutdown event is triggered. The output current control level remains constant down to 0 V. |
| UVP | Undervoltage Protection. If the output being monitored is detected as going under voltage, the UVP function sends a fault signal. After a delay, PEN goes false, the output is disabled, and either latch-off or an auto-restart occurs, depending on the mode selected. The DC_OK output also goes false immediately to show that the output is out of tolerance. |
| OVP | Overvoltage Protection. If the output being monitored is detected as going over voltage, the OVP function latches and sends a fault signal, PEN goes false, and CBD goes true. The DC_OK output also goes false immediately. OVP faults are always latching and require the cycling of PSON or $V_{DD}$ or SMBus command to reset the latch. |
| OCP | Overcurrent Protection. If the output being monitored is detected as going over current for a certain time, the OCP function sends out a fault signal that triggers a shutdown that can be latched or allowed to auto-restart, depending on the mode selected. Prior to shutting down, the DC_OK output goes false warning the system that output will be lost. The latch is the same one used for OVP. For auto-restart, the OCP time out period is configurable. |
| OTP | Overtemperature Protection. If the temperature being sensed is detected as going over the selected limit, the OTP function sends out a fault signal that triggers a shutdown that can be latched or allowed to auto-restart depending on the mode selected. Prior to shutting down, the DC_OK output goes false warning the system that output will be lost. The latch is the same one used for OVP. |
| UVB | Undervoltage Blanking. The UVP function is blanked (disabled) during power-up or if the $AC_{SENSE}$ function is false (ac line voltage is low). When in constant current mode, UVB is disabled. The status of $AC_{SENSE}$ must be known to the IC, either by virtue of the on-board $AC_{SENSE}$ or communicated by the SMBus with the help of an external microprocessor or by using AC_OKLink. When in constant current mode, due to an overload, UVB is applied for the overcurrent ride through period. |
| DC_OK | The DC_OK function advises the system on the status of the power supply. When it is false, the system is assured of at least 1 ms of operation if ac power is lost for any reason. Other turn-off modes provide more warning time. This pin is an open-drain output. It can be configured as a P-channel pull-up or an N-channel pull-down. It may also be configured as positive or negative (inverted) logic. |
| AC_OK | The AC_OK function advises the system whether or not sufficient bulk voltage is present to allow reliable operation. The system may choose to shut down if this pin is false. The power supply normally tries to maintain normal operation as long as possible, although DC_OK goes false when only a millisecond or so of operation time is left. This pin is an open-drain output. It can be configured as a P-channel pull-up or an N-channel pull-down. It may also be configured as positive or negative (inverted) logic. |
| DC_OKondelay | The DC_OK output is kept false for typically 100 ms to 900 ms during power-up. |
| DC_OKoffdelay | When the system is to be shut down in response to PSON going low, or in response to an OCP or OTP event, a signal is first sent to the DC_OK output to go false as a warning that power is about to be lost. PEN is signaled false typically 2 ms later (configurable). |
| Debounce Digital Noise Filter | All of the inputs to the logic core are first debounced or digitally filtered to improve noise immunity. The debounce period for OV events is in the order of 16 µs, for UV events it is 450 µs, and for PSON it is typically 80 ms (configurable). |
| $AC_{SENSE}1$ | A voltage from the secondary of the power transformer, which can provide an analog of the bulk supply, is rectified and lightly filtered and measured by the ac sense function. At start-up, if this voltage is adequate, this function signals the end user system that it is okay to start. If a brown-out occurs or ac power is removed, this function can provide early warning that power is about to be lost and allow the system to shut down in an orderly manner. While $AC_{SENSE}$ is low, UVB is enabled, which means undervoltage protection is not initiated. If ac power is so low that the converter cannot continue to operate, other protection circuits on the primary side normally shut down the converter. When an adequate voltage level is resumed, a power-up cycle is initiated. |

| Mnemonic | Description |
|---|---|
| Pulse_OK | As well as providing ac sense, the preceding connection to the transformer is used to gate the operation of the OrFET circuit. If the output of the transformer is good and has no problems, the OrFET circuit allows gate drive to the OrFET. |
| AC Hysteresis | AC Sense Hysteresis. Configurable voltage on the ac sense input allows the ac sense upper and lower threshold to be adjusted to suit different amounts of low frequency ripple present on the bulk capacitor. |
| $AC_{SENSE}2$ | An alternate form of ac sense can be accepted by the ASIC. This may in the form of an opto-coupled signal from the primary side where the actual level sensing might be done. As with the above, while ac is low and UVB is disabled, AC_OK is false and DC_OK is true. Any brownout protection that might be required on the primary is done on the primary side. |
| Soft-start | At start-up, the voltage reference to the voltage error amplifier is brought up slowly in approximately 127 steps to provide a controlled rate of rise of the output voltage. |
| $V_{DD}$–OVP | An OVP fault on the auxiliary supply to the ASIC causes a standard OVP operation (see the OVP function). |
| $V_{DD}$–UVL | A UVL fault on the auxiliary supply to the IC causes a standard UVP operation (see the UVP function). |
| AutoRestart Mode | In this mode, the housekeeping circuit attempts to restart the supply after an undervoltage event at about 1 second intervals. No other fault can initiate auto-restart. |
| $V_{REF}$–MON | The internal precision reference is monitored by a separate reference for overvoltage and allows truly redundant OVP. The externally available reference is also monitored for an undervoltage that would indicate a short on the pin. |
| GND–MON | The internal ASIC ground is constantly monitored against the remote sense negative pin. If the chip ground goes positive with respect to this pin, it indicates that the chip ground is open-circuit either inside the ASIC or the external wiring. The ASIC would be latched off, similar to an OV event. |

# THEORY OF OPERATION

## POWER MANAGEMENT

This block contains $V_{DD}$ undervoltage lockout circuitry and a power-on/reset function. It also provides precision references for internal use and a buffered reference voltage, $V_{REF}$. If $V_{REF}$ is configured to an output pin, overloading, shorting to ground, or shorting to $V_{DD}$ do not effect the internal references. See Figure 8.

During power-on, $V_{REF}$ does not come up until $V_{DD}$ exceeds the upper UVL threshold. Housekeeping functions in this block include reference voltage monitors, $V_{DD}$ overvoltage, and a ground fault detector.

The ground fault detector monitors ADM1041 ground with respect to the remote sense pin $V_S$–. If GND becomes positive with respect to $V_S$– an on-chip signal, $V_{DD}$OK, goes false. $V_{DD}$OK is true only when all the following conditions are met: ground is negative with respect to $V_S$–, INTREF and EXTREF are operating normally, $V_{DD}$ > UVLHI, and $V_{DD}$ < $V_{DD}$ OVP threshold.

## GAIN TRIMMING AND CONFIGURATION

The various gain settings and configurations throughout the ADM1041 are digitally set up via the SMBus after it has been loaded onto its printed circuit board. There is no need for external trim potentiometers. An initial adjustment process should be carried out in a test system. Other adjustments such as current sense and voltage calibration should be carried out in the completed power supply.

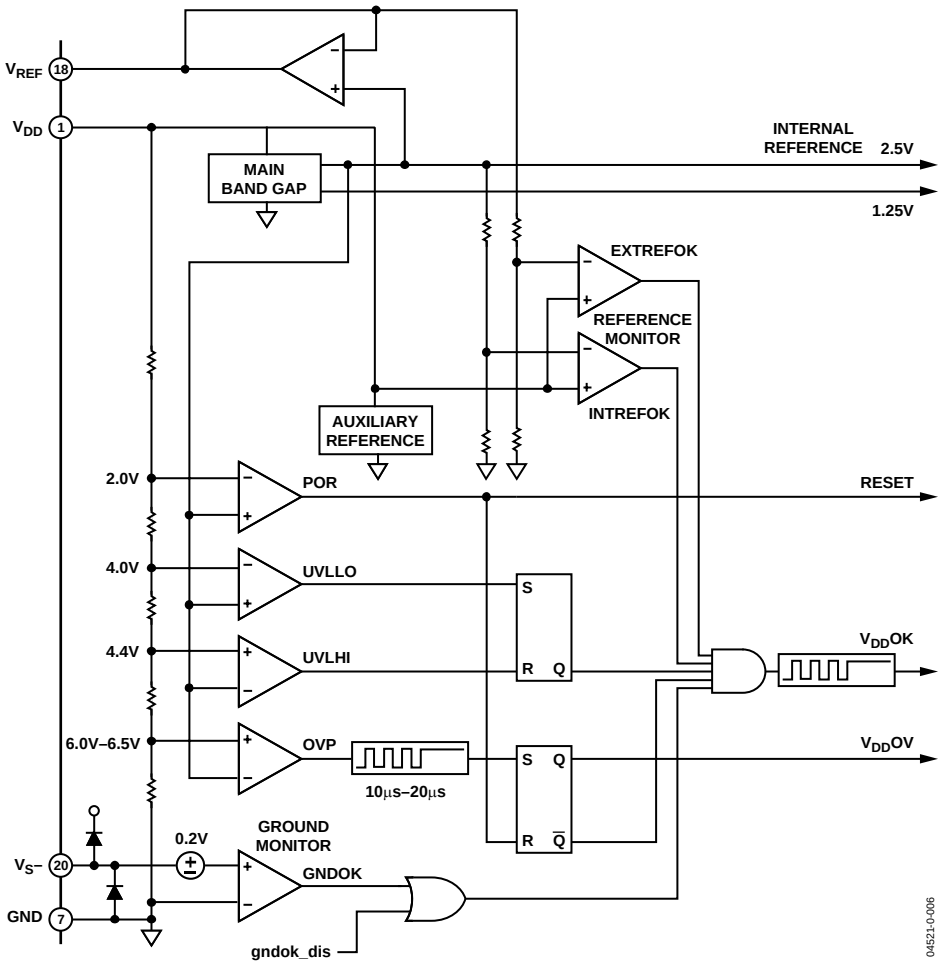


*Figure 8. Block Diagram of Power Management Section*

## DIFFERENTIAL REMOTE SENSE AMPLIFIER

This amplifier senses the load voltage and is the main voltage feedback input. A differential input is used to compensate for the voltage drop on the negative output cable of the power supply. An external voltage divider should be designed to set the $V_S$+ pin to approximately 2.0 V with respect to $V_S$–. The amplifier gain is 1.0. See Figure 9.

## SET LOAD VOLTAGE

The load voltage may be trimmed via the SMBus by a trim stage at the output of the differential remote sense amplifier. The voltage at the output of the trimmer is 1.50 V when the voltage loop is closed. See Figure 9.

## LOAD OVERVOLTAGE (OV)

A comparator at the output of the load voltage trim stage detects load overvoltage. The load OV threshold can be trimmed via the SMBus. The main purpose is to turn off the OrFET when the load voltage rises to an intermediate over-voltage level that is below the local OVP level. This circuit is not latching. See Figure 9.

## LOCAL VOLTAGE SENSE

This amplifier senses the output voltage of the power supply just before the OrFET. Its input is derived from one of the pins used for current sensing and is set to 2.0 V by an external voltage divider. The amplifier gain is 1.3. See Figure 9.

## LOCAL OVERVOLTAGE PROTECTION (OVP)

This is the main overvoltage detection for the power supply. It is detected locally so that only the faulty power supply shuts down in the event of an OVP condition in an N+1 redundant power system. This occurs only after a load OV event. The local OVP threshold may be trimmed via the SMBus. See Figure 9.

## LOCAL UNDERVOLTAGE PROTECTION (UVP)

This is the main undervoltage detection for the power supply. It is also detected locally so that a faulty power supply can be detected in an N+1 redundant power system. The local UVP threshold may be trimmed via the SMBus. See Figure 9.

## FALSE UV CLAMP

If a faulty power supply causes an OVP condition on the system bus, the control loops in the good power supplies is driven to zero output. Therefore, a means is required to prevent the good power supplies from indicating an undervoltage, and they must recover quickly after the faulty power supply has shut down. The false UV clamp achieves this by clamping the output voltage just above the local UVP threshold. It may be trimmed via the SMBus. The OCPF signal disables the clamp during overcurrent faults. See Figure 9.

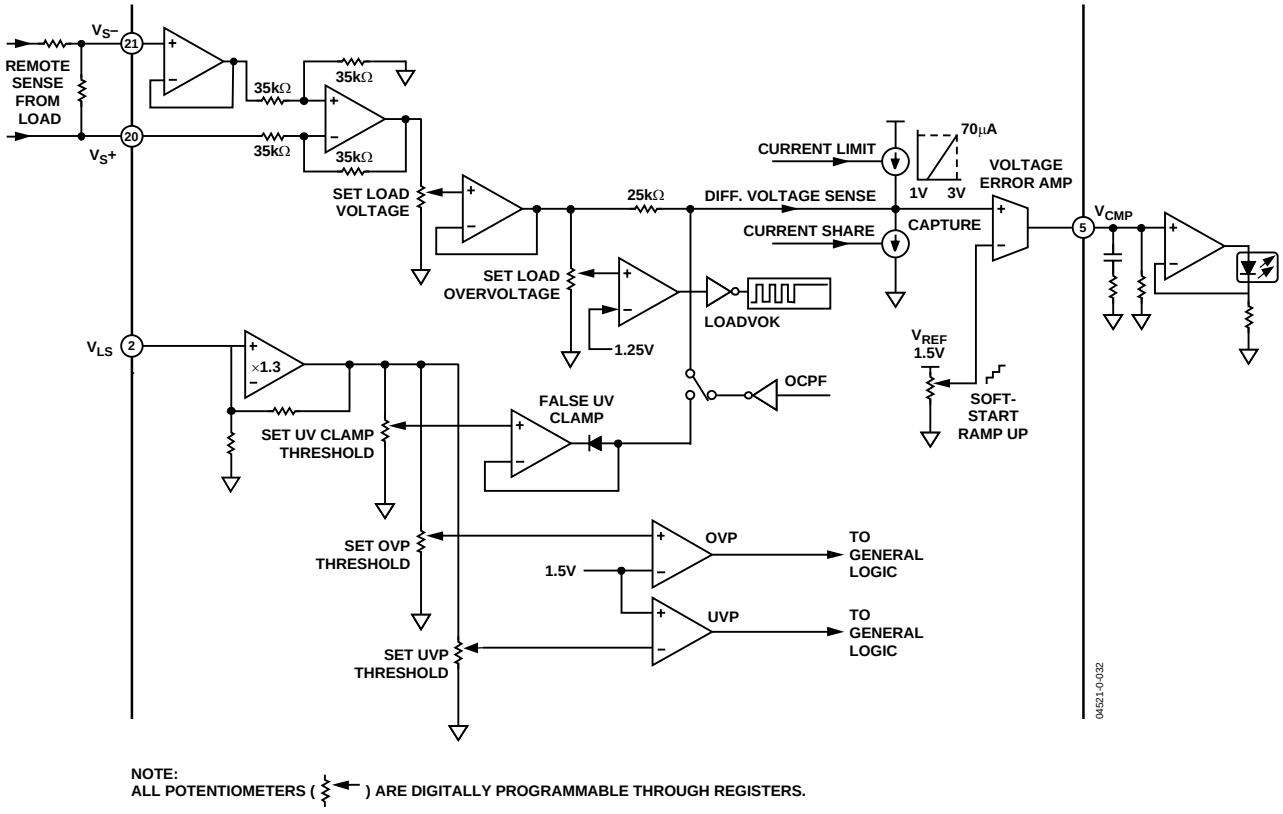


*Figure 9. Block Diagram of Voltage Sense Amplifier*

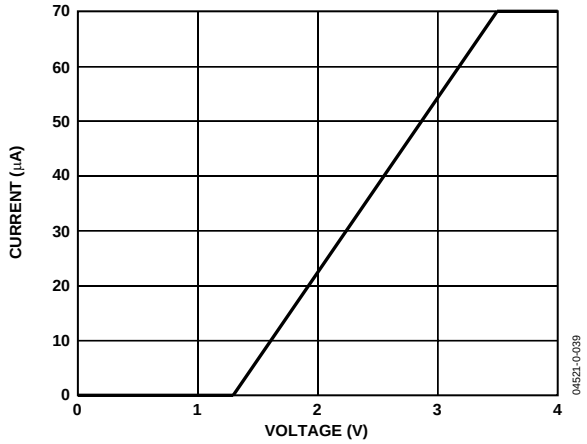


*Figure 10. Current Limit*

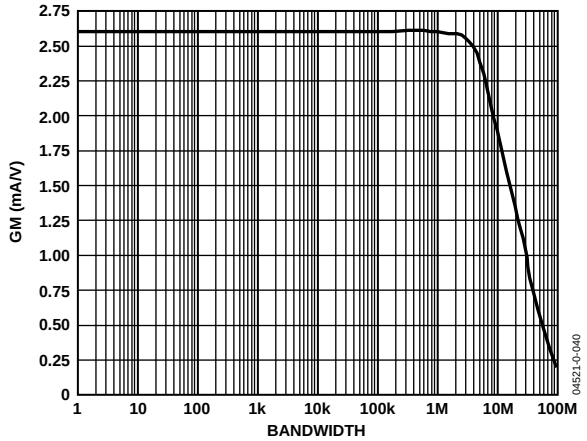


*Figure 11. $V_{CMP}$ Transconductance*

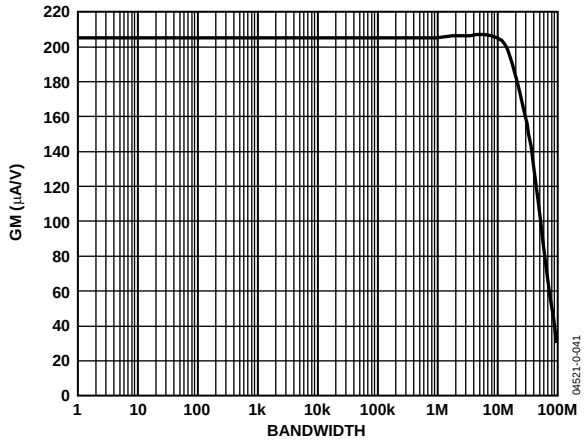


*Figure 12. $C_{CMP}$ and $S_{CMP}$ Transconductance*

## VOLTAGE ERROR AMPLIFIER

This is a high gain transconductance amplifier that takes its input from the load voltage trim stage described previously. The amplifier requires only the output pin for loop compensation, which typically consists of a series RC network-to-common. A parallel resistor may be added to common to reduce the open-loop gain and thereby provide some output voltage droop as output current increases. The output of the amplifier is typically connected to an emitter follower that drives an optocoupler, which in turn controls the duty of the primary side PWM. The emitter follower should have a high gain to minimize loading effects on the amplifier. Alternatively, an op amp voltage follower may be used. See Figure 9, Figure 10, and Figure 11.

## MAIN VOLTAGE REFERENCE

A 1.5 V reference is connected to the inverting input of the voltage error amplifier. This 1.5 V reference is the output voltage of the soft-start circuit. Under closed-loop conditions, the voltage at the noninverting input is also controlled to 1.5 V. During start-up, the output voltage should be ramped up in a linear fashion at a rate that is independent of the load current. This is achieved by digitally ramping up the reference voltage by using a counter and a DAC. The ramp rate is configurable via the SMBus. See Figure 14.

## CURRENT SENSE AMPLIFIER

This is a two-stage differential amplifier that achieves low offset and accuracy. The amplifier has the option to be chopped to reduce offset or left as a linear amplifier without chopping. Refer to the Register Listing for more details. Its gain may be selected from three ranges. It is followed by a trim stage and then by a low gain buffer stage that can be configured with a gain of 1.0 or 2.1. The result is a total of six overlapping gain ranges (65 to 230), one of which must be selected via the SMBus. This gives ample adjustment to compensate for the poor initial tolerance of the resistance wires typically used for current sensing. It also allows selecting a higher sensitivity for better efficiency or a lower sensitivity for better accuracy (lower offset). The amplifier offset voltage is trimmed to zero in a once-off operation via the SMBus and uses a voltage controlled current source at the output of the first gain stage. A second controlled current source is used to trim out the additional offset due to the mismatch of the external divider resistors. This offset trim is dynamically adjusted according to the common-mode voltage present at the top of the voltage dividers. Six ranges are selectable according to the magnitude and polarity of this offset component. Because the offset compensation circuit itself has some inaccuracies, the best overall current sense accuracy is obtained by using more closely matched external dividers and then selecting a low compensation range. See Figure 14.

## CURRENT SENSING

Current is typically sensed by a low value resistor in series with the positive output of the power supply, just before the OrFET or diode. For high voltages (12 V and higher), this resistor is usually placed in the negative load. A pair of closely matched voltage dividers connected to Pins 2 and 3 divide the common-mode voltage down to approximately 2.0 V. The divider ratio must be the same as used in the local and remote voltage sense circuits. Alternatively, current may be sensed by a current transformer (CT) connected to Pin 8. The ADM1041 must be configured via the SMBus to select one or the other. See Figure 13.

## CURRENT TRANSFORMER INPUT

The ADM1041 can also be configured to sense current by using a current transformer (CT) connected to Pin 8. In this case, the resistive current sense is disabled. A separate single-ended amplifier has two possible sensitivities that are selected via the SMBus. If the CT option is selected, the gain of the 1.0, 2.1 buffer that follows the gain trim stage is no longer configurable and is fixed at 1.0.

The share driver amplifier has a total of 100 mV positive offset built into it. In order to use the ADM1041 in CT mode, it is necessary to compensate for this additional 100 mV offset. This is achieved by adding in a positive offset on the CT input. This also allows any negative amplifier offsets in the CT chain to be nulled out.

This offset cancellation is achieved by sourcing a current through a resistance on the ICT pin. The resistor value is 40 kΩ and so for 100 mV of offset cancellation a current of 2.5 μA is required. It is possible to fine trim this current via Register 15h, Bits 4–0, step size 170 nA. For example, 2.5 μA ≈ 15 × 170 nA; so the code for Register 15h is decimal 15 or 0Fh. Refer to the Current Transformer parameter in the Specifications table for more details. See Figure 13.

## CURRENT SENSE CALIBRATION

Regardless of which means is used to sense the current, the end result of the calibration process should produce the standard current share signal between Pins 20 and 23, that is, 2.0 V at 100% load, excluding any additional share signal offset that might be configured.

## CURRENT LIMIT ERROR AMPLIFIER

This is a low gain transconductance amplifier that takes its input from one of the calibrated current stages described previously. The amplifier requires only the output pin for loop compensation, which typically consists of a series RC network to common. A trimmable reference provides a wide range of adjustment for the current limit. When the current signal reaches the reference voltage, the output of the error amplifier comes out of saturation and begins to drive a controlled current source. The control threshold is nominally 1.0 V. This current flows through a resistor in series with the trimmed voltage loop signal and thereby attempts to increase the voltage signal above the 1.5 V reference for that loop. The closed voltage loop reacts by reducing the power supply's output voltage and this results in constant current operation. See Figure 13.

## OVERCURRENT PROTECTION

When the current limit threshold is reached, the OCP comparator detects when the current error amplifier comes out of saturation. Its threshold is nominally 0.5 V. This starts a timer that, when it times out, causes an OCP condition to occur and the power supply to shut down. If the current limit disappears before the time has expired, the timer is reset. The time period is configurable via the SMBus. Undervoltage blanking is applied during the timer operation. See Figure 14.

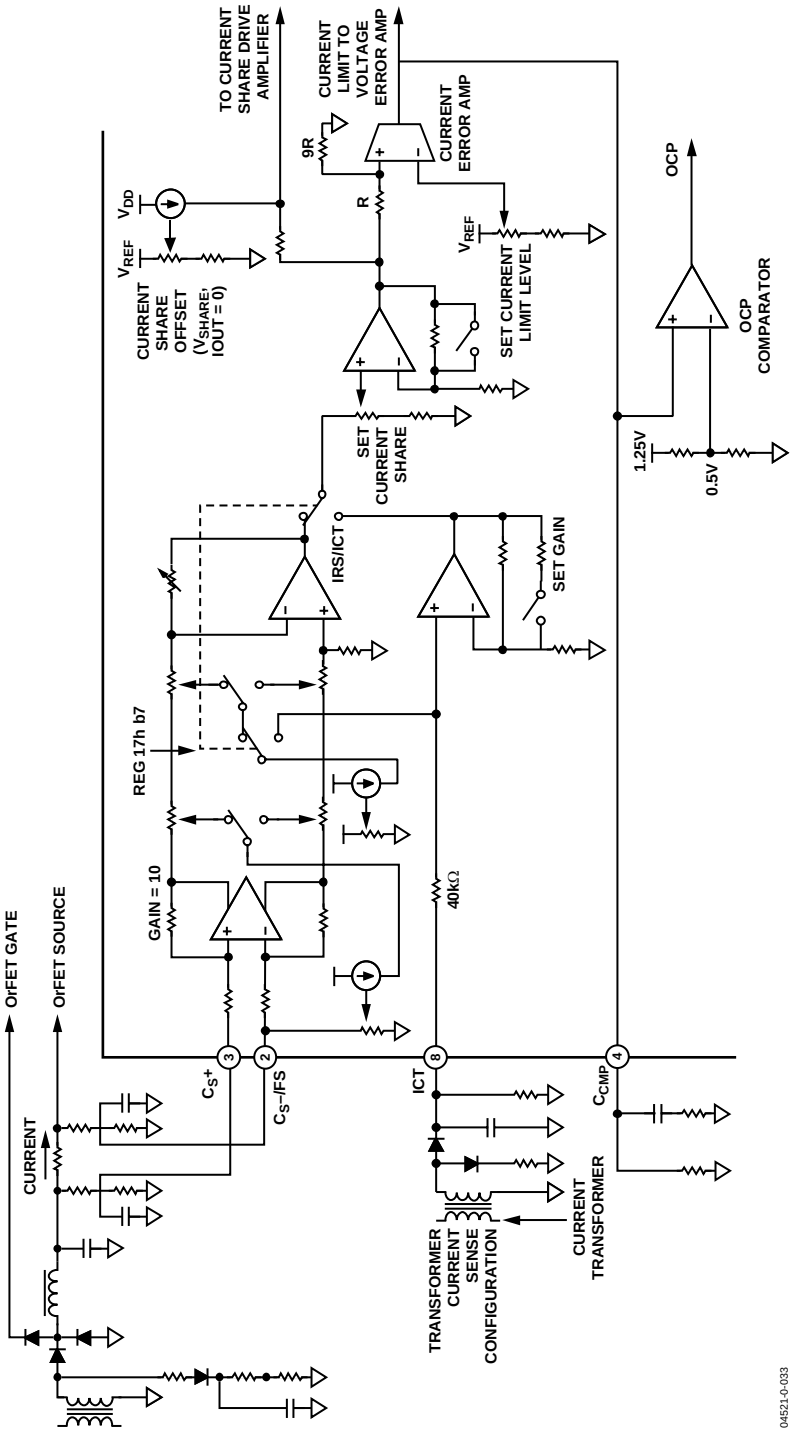


*Figure 13. Current Sense*

# CURRENT SHARE

The current share method is the master–slave type, which means that the power supply with the highest output current automatically becomes the master and controls the share bus signal. All other power supplies become slaves, and the share bus signal causes them to increase their output voltages slightly until their output currents are almost equal to that of the master. This scheme has two major advantages. A failed master power supply simply allows one of the slaves to become the new master. A short circuited share signal disables current sharing, but all power supplies default to their normal voltage setting, allowing a certain degree of passive sharing. Because this chip uses a low voltage process, an external bidirectional amplifier is needed for most existing share bus signal levels. The voltage between Pins 20 and 23 is always controlled to 2.0 V full scale, ignoring any offset. By connecting Pins 20 and 23 together, the chip can produce a 2.0 V share signal directly without any external circuits. To improve accuracy, the share signal is referenced to remote voltage sense negative.

## CURRENT SHARE OFFSET

To satisfy some customer specifications, the current share signal can be offset by a fixed amount by using a trimmable current generator and a series resistor. The offset is added on top of the 2.0 V full-scale current share output signal. See Figure 14.

## $I_{SHARE}$ DRIVE AMPLIFIER

This amplifier is a buffer with enough current source capability to drive the current share circuits of several slave power supplies. It has negligible current sink capability. Refer to the Differential Sense Amplifier section that follows.

## DIFFERENTIAL SENSE AMPLIFIER

This amplifier has unity gain and senses the difference between the share bus voltage and the remote voltage sense negative pin. When the power supply is the master, it forms a closed loop with the $I_{SHARE}$ drive amplifier described above, and therefore it causes the share bus voltage between Pins 20 and 23 to equal the current share signal at the noninverting input of the $I_{SHARE}$ drive amplifier. When the power supply is a slave, the output of the differential sense amplifier exceeds the internal current share signal, which causes the $I_{SHARE}$ drive amplifier to be driven into cutoff. Because it is not possible to trim out negative offsets in the op amps in the current share chain, a 50 mV voltage source is used to provide a known fixed positive offset. The share bus offset controlled current source must be trimmed via the SMBus to take out the resulting overall offset. See Figure 14.

## $I_{SHARE}$ ERROR AMPLIFIER

This is a low gain transconductance amplifier that measures the difference between the internal current share voltage and the signal voltage on the external share bus. If two power supplies have almost identical current share signals, a 50 mV voltage source on the inverting input helps arbitrate which power supply becomes the master and prevents "hunting" between master and slave roles. The amplifier requires only the output pin for loop compensation, which typically consists of a series RC network to common. When the power supply is a slave, the output of the error amplifier comes out of saturation and begins to drive a controlled current sink. The control threshold is nominally 1.0 V. This current flows from a resistor in series with the trimmed voltage loop signal and thereby attempts to decrease the voltage signal below the 1.5 V reference for that loop. The closed voltage loop reacts by increasing the power supply's output voltage until current share is achieved. The maximum current sink is limited so that the power supply voltage can be increased only a small amount, which is usually limited to be within the customer's specified voltage regulation limit. This small voltage increase also limits the control range of the current share circuit and is called the capture range. The capture range may be set via the SMBus to one of four values, from 1% to 4% nominal. See Figure 14.

## $I_{SHARE}$ CLAMP

This clamp keeps the current share-loop compensation capacitor discharged when the current share is not required to operate. The clamp is released during power-up when the voltage reference and therefore the output voltage of the power supply has risen to either 75% or 88% of its final value. This is configurable via the SMBus. When the clamp is released, the current share loop slowly "walks in" the current share and helps to avoid output voltage spikes during hot swapping. See Figure 14.

## Share_OK DETECTOR

Incorrect current sharing is a useful early indicator that there is some sort of non-catastrophic problem with one of the power supplies in a parallel system. Two comparators are used to detect an excessive positive or negative error voltage at the input of the $I_{SHARE}$ error amplifier, which indicates that the current share loop has lost control. One of four possible error levels must be configured via the SMBus. See Figure 14.

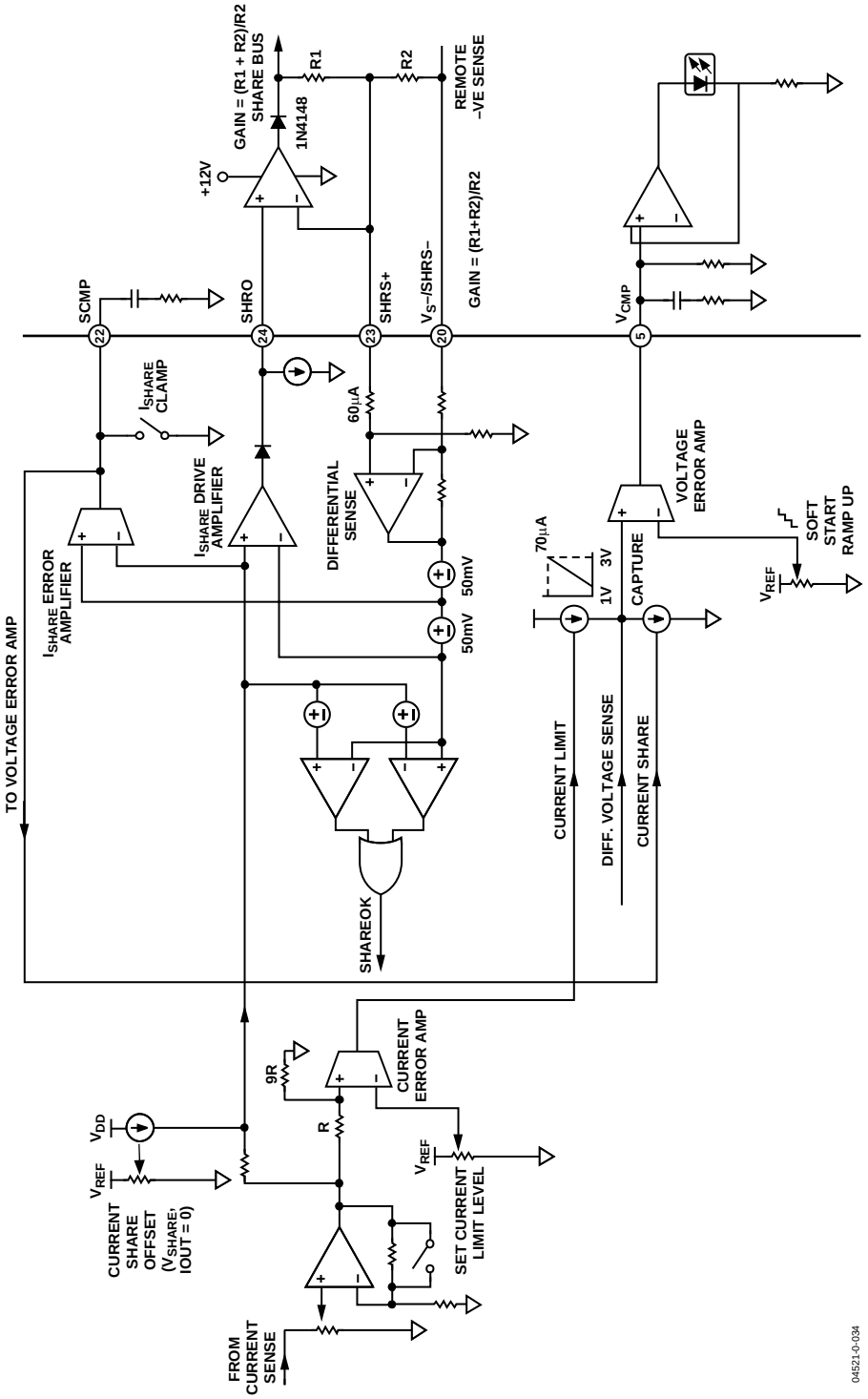


*Figure 14. Current Share Circuit and Soft-start*

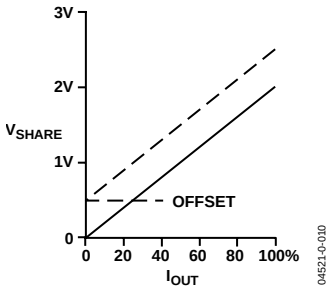


*Figure 15. Load Share Characteristic*

# PULSE/$AC_{SENSE}$2

When configured, PULSE and $AC_{SENSE}$ monitor the output of the power main transformer. See Figure 16.

## PULSE

Providing the output of the pulse function (PULSE_OK) is high, the FET in the ORing circuit can be turned on. If the pulses stop for any reason, about 1 second later the PULSE_OK goes low and the OrFET drive is disabled. This delay allows passage of all expected pulse skipping modes that might occur in no load or very light load situations. See Figure 16.

## $AC_{SENSE}$

This is rarely used to measure directly the ac input to the supply. $AC_{SENSE}$1 or $AC_{SENSE}$2 are usually used to indirectly measure the voltage across the bulk capacitor so that the system can be signaled that power is normal. Also if power is actually lost, $AC_{SENSE}$ represents when just enough energy is left for an orderly shutdown of the power supply. See Figure 16.

The ac sense function monitors the amplitude of the incoming pulse and, if sufficiently high, generates a flag to indicate ac, or strictly speaking, the voltage on the bulk capacitor, is okay. Since the envelope of the pulse has a considerable amount of 100 Hz ripple, hysteresis is available on this input pin. Internally there is a 20 µA to 80 µA current sink. With a 909R external thevenin resistance, this current range translates to a voltage hysteresis of 200 mV to 500 mV. The internal hysteresis current is turned off when the voltage exceeds the reference on the comparator. This form of hysteresis allows simple scaling to be implemented by changing the source impedance of the pulse conditioning circuit. Some trimming of hysteresis and threshold voltage is provided. The ac sense function can be configured to be derived from $AC_{SENSE}$2 rather than $AC_{SENSE}$1. This allows a separate dc input from various locations to be used to generate AC_OK for better flexibility or accuracy.

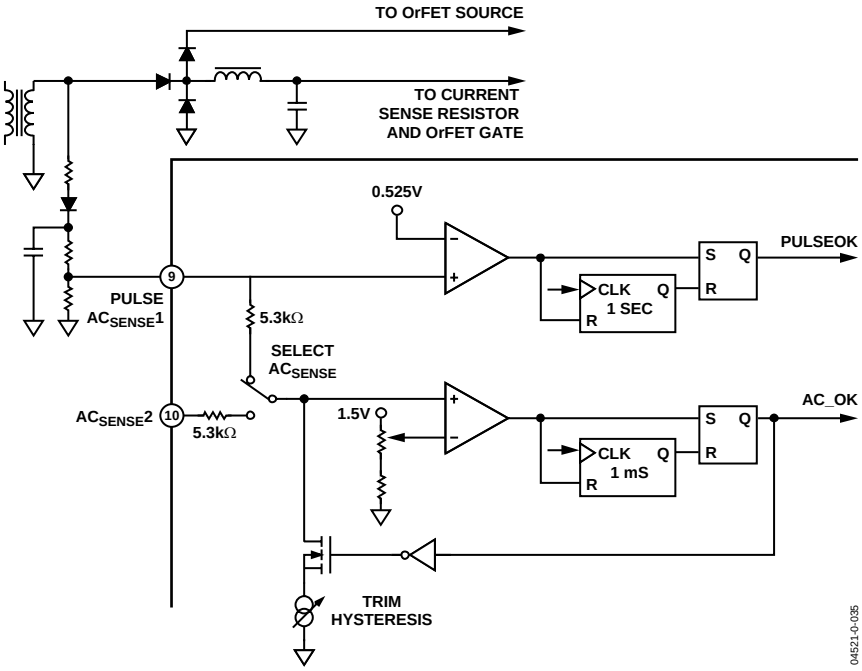


*Figure 16. Pulse In and AC Sense Circuit*

## OrFET GATE DRIVE

When configured, this block provides a signal to turn on/off an OrFET used in the output of paralleled power supplies. The gate drive voltage of one of these FETs is typically 6 V to 10 V above the output voltage. Since the output voltage of the ADM1041 is limited, an external transistor needs to be used. The block diagram shows an example of this approach. See Figure 21.

The $F_G$ output is an open-drain, N-channel MOSFET and is normally high, which holds the OrFET off. When all the start-up conditions are correct, Pin 19 is pulled low, which allows the OrFET to turn on. The logic can also be configured as inverted if a noninverting drive circuit is used.

A differential amplifier monitors the voltage across the OrFET and has two major functions. First, during start-up, it allows the OrFET to turn on with almost 0 V across it to avoid voltage glitches on the bus. This applies to a hot bus or a cold bus. The internal threshold can be configured from 20 mV to 50 mV (negative), which is scaled up by the external voltage dividers.

Second, if a rectifier or filter capacitor fails during steady state operation, it detects the resulting reverse voltage across the OrFET's on-resistance and turns off the OrFET before a voltage dip appears on the bus. The internal threshold can be configured from 100 mV to 250 mV (negative), which is also scaled up by the external voltage dividers. A slightly larger filter capacitor may be used on the voltage divider at Pin 6 to speed up this function.

Figure 17 shows the typical response time of the ADM1041 to such an event. In the plot, $V_{FD}$ is ramped down and the response time of the $F_G$ pin to a reverse voltage event on the $F_D$ pin is seen. This simulates the rectifier or filter capacitor failure during steady state operation. When the $F_D$ voltage is below 1.9 V (2 V minus 100 mV threshold), the $F_G$ pin reacts. As can be seen, the response time is approx 330 nsecs. This extremely fast turn-off is vital in an n+1 power supply system configuration. It ensures that the damaged power supply removes itself from the system quickly. Figure 18 is the equivalent response time to turn on the OrFET. As can be seen, there is a delay of approximately 500 ns before the FG pin ramps down to turn on the OrFET, and therefore allow the power supply to contribute to the system. This propagation delay is due mainly to internal amplifier response limitations. The circuit in Figure 21 is used to generate these plots. In this case, the resistor to VDD from the FG pin is 2 kΩ.

Figure 19 and Figure 20 show the OrFET turn-off time and turn-on time when the $F_G$ pin polarity is inverted. As can be seen, to turn off the OrFET, the $V_{FG}$ pin now transitions from high to low. Also, its corresponding turn-on event occurs from a low-to-high transition. The circuit in Figure 21 is used to generate these plots.

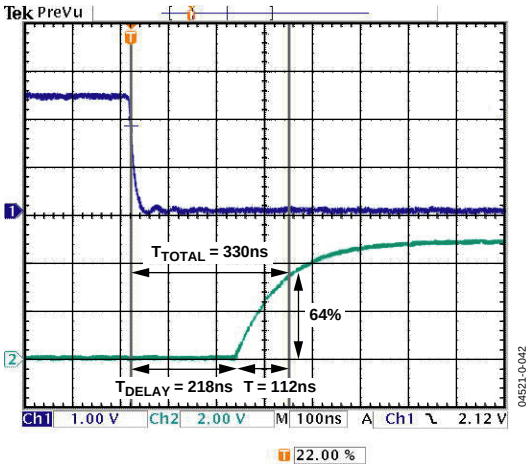


*Figure 17. OrFET Turn-Off Time (Default Polarity)*

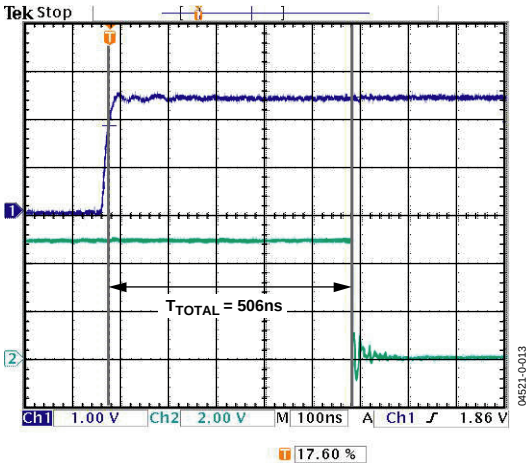


*Figure 18. OrFET Turn-On Time (Default Polarity)*

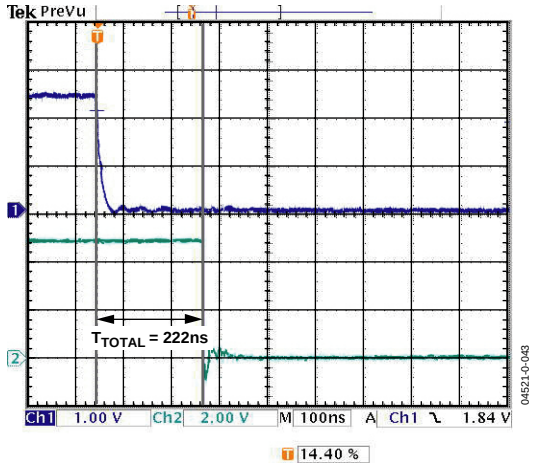


Figure 19. OrFET Turn- Off Time (Inverse Polarity)

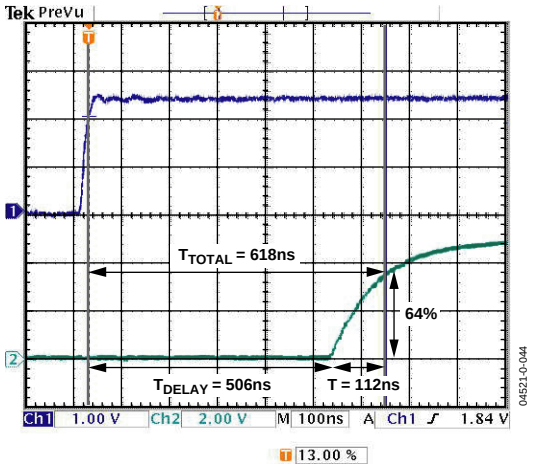


Figure 20. OrFET Turn-On Time (Inverse Polarity)

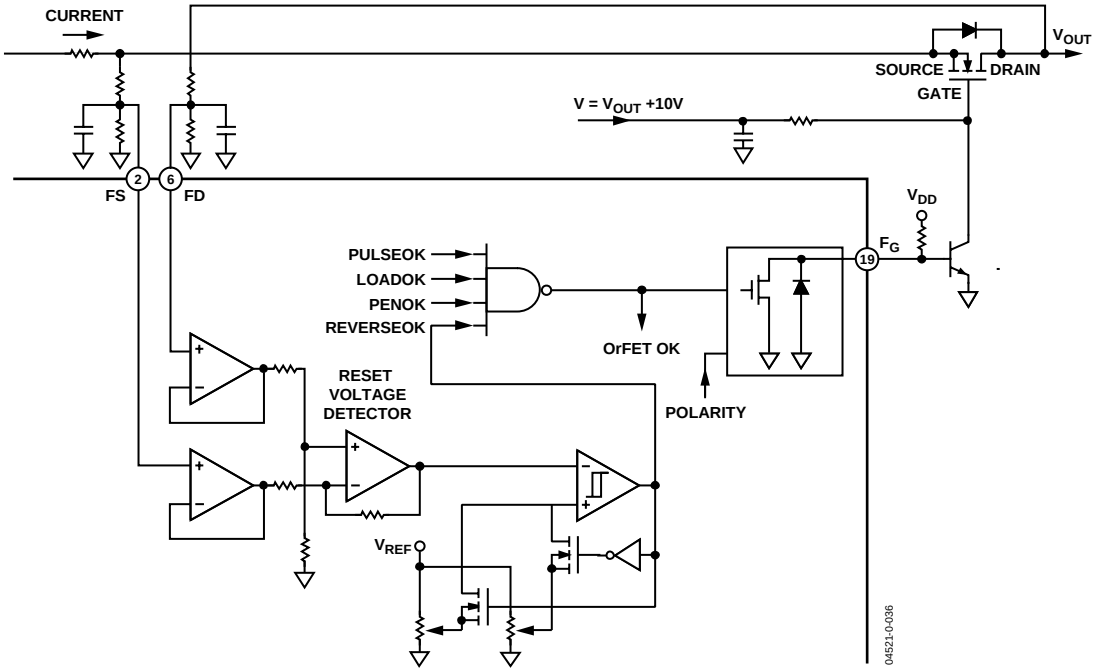


Figure 21. OrFET Gate Drive Circuit

# OSCILLATOR AND TIMING GENERATORS

An on-board oscillator is used to generate timing signals. Some trimming of the oscillator is provided to adjust for variations in processing.

All timing generated from the oscillator is expected to meet the same tolerances as the oscillator. Since individual delay counters are generally two to three bits, the worst error is one clock period into these counters, which is 25% of the nominal delay period. None of these tolerances are extremely critical.

## LOGIC I/O AND MONITOR PINS

Apart from pins required for the various key analog functions, a number of pins are used for logic level I/O signals. If the logic I/O function is not required, the pins may be reconfigured as general-purpose comparators for analog level monitoring (MON) and may be additionally configured to have typical OVP and UVP properties, either positive-going or negative-going, depending on whether a positive supply output or a negative supply output is being monitored. When monitoring negative outputs, a positive bias must be applied via a resistor to $V_{REF}$. The status of all protection and monitoring comparators are held in registers that can be read by a microprocessor via the SMBus. Certain control bits may be written to via the SMBus.

### *CBD/ALERT*

This pin can be used either as a crowbar driver or as an SMBus alert signal to indicate that a fault has occurred. It is typically configured to respond to a variety of status flags, as detailed in Registers 1Ah and 1Bh. The primary function of this pin is as a crowbar driver, and as such it should be configured to respond to the OV fault status flag. It can be configured to respond to any or all of a variety of fault status flags, including a microprocessor writable flag, and can be configured as latching or nonlatching. It may also be configured as an open-drain N-channel or P-channel MOSFET and as positive or negative (inverted) logic. A pull-up or pull-down resistor is required. This pin may be wire-ORed with the same pin on other ADM1041 ASICs in the power supply.

The alternative function is an SMBus alert output that can be used as an interrupt to a microprocessor. If a fault occurs, the microprocessor can then query the ADM1041(s) about the fault status. This is intended to avoid continuously polling the ADM1041(s).

Generally, the microprocessor needs to routinely gather other data from the ADM1041(s), which can include the fault status, so the ALERT function may not be used. Also, the simplest microprocessors may not have an interrupt function. This allows the CBD/ALERT pin to be used for other functions.

### *MON1*

This is the alternative analog comparator function for the Pulse/$AC_{SENSE}1$ pin (Pin 9). The threshold is 1.25 V. When MON1 is selected, $AC_{SENSE}1$ defaults to true.

### *MON2*

This is the alternative analog comparator function for the $AC_{SENSE}2$ pin (Pin 10). The threshold is 1.25 V. When MON2 is selected, $AC_{SENSE}2$ defaults to true.

### *PEN*

This is the power enable pin that turns the PWM converter on and can be configured as active high or low. This might drive an opto-isolator back to the primary side or connect to the enable pin of a secondary-side post regulator.

### *PSON*

This pin is usually connected to the customer's PSON signal and, when asserted, causes the ADM1041 to turn on the power output. It can be configured as active high or low. Alternatively, a microprocessor can communicate the PSON function to the ADM1041 using the SMBus. Or the $PS_{ON}$LINK signal may be used. When the PSON pin is not used as such it can be configured as an analog input, MON3.

### *MON3*

This is the alternative analog comparator function for the PSON pin (Pin 16). The threshold is 1.25 V. When MON3 is selected, PS ON defaults to off.

### *DC_OK (PW-OK, PWR Good, Etc.)*

This output is true when all dc output voltages are within tolerance and goes false to signify an imminent loss of power. Timing is discussed later. It can be configured as an open-drain N-channel or P-channel MOSFET and as positive or negative (inverted) logic. A pull-up or pull-down resistor is required. This pin may be wire-ORed with the same pin on other ADM1041 ASICs in the power supply. When the DC_OK pin is not used as such, it can be configured as an analog input, MON4.

### *MON4*

This is the alternative analog comparator function for the DC_OK pin (Pin 17). The threshold is 1.25 V.

### *$V_{REF}$*

This pin normally provides a precision 2.5 V voltage reference. Alternatively, it can be configured as the AC_OK output or as an analog input, MON5. A load capacitance of 1 nF (typ) is recommended on $V_{REF}$.

### AC_OK

This output is true when either $AC_{SENSE}1$ or $AC_{SENSE}2$ is true (configurable). It can be configured as an open-drain N-channel or P-channel MOSFET and as positive or negative (inverted) logic. A pull-up or pull-down resistor is required. This pin can be wire-ORed with the same pin on other ADM1041 ASICs in the power supply. When the AC_OK pin is not used as such, it can be configured as an analog input, MON5, or as a voltage reference.

### MON5

This is the alternative analog comparator function for the AC_OK/$V_{REF}$ pin (Pin 18). The threshold is 2.5 V, and it has a 100 µA current source that allows hysteresis to be controlled by adjusting the external source resistance. It is ideal for an OTP sensing circuit using a thermistor as part of a voltage divider. The OTP condition can be configured to latch off the power supply (similar to OVP) or to allow an auto-restart (soft OTP). See Figure 22.

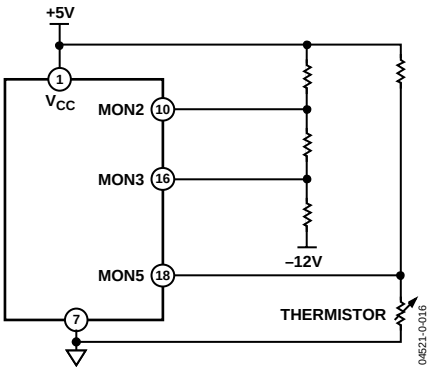


*Figure 22. Example of MON Pin Configuration*

In the preceding example, MON2 and MON3 are configured to monitor a negative 12 V rail. MON2 is configured as negative going OVP, and MON3 is configured as positive going UVP. The 5 V power rail is used for bias voltage.

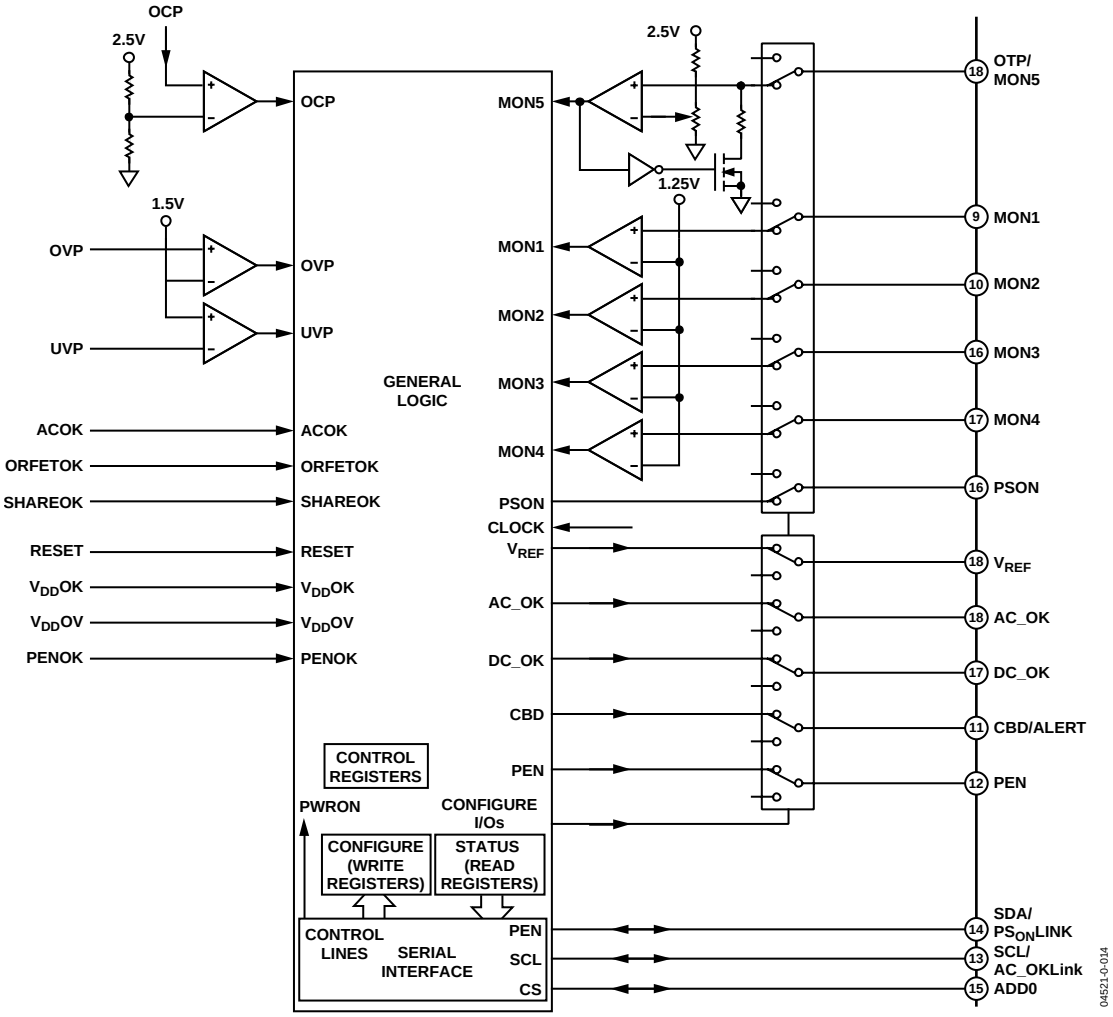


*Figure 23. Block Diagram of Protection and General Logic*

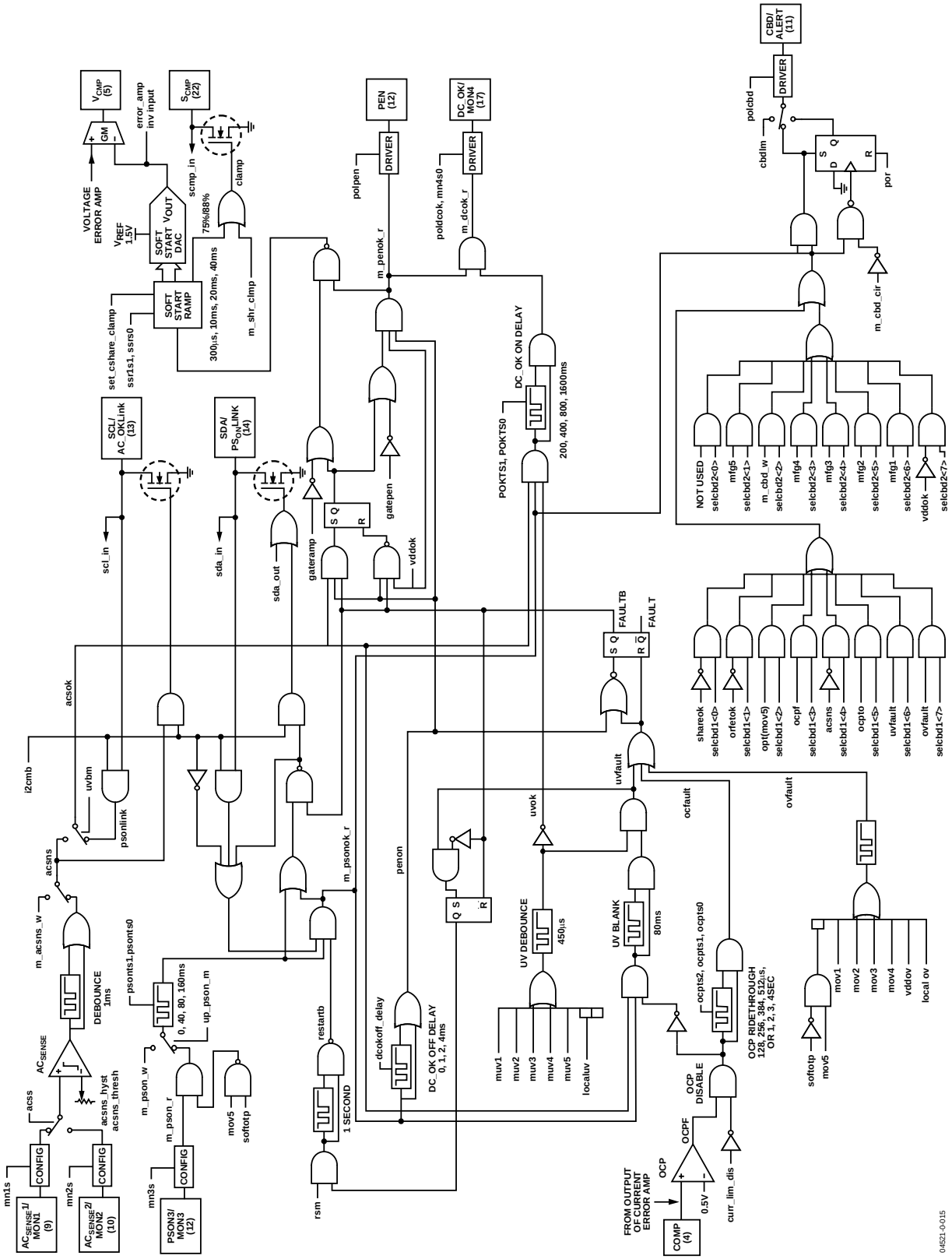


*Figure 24. General Logic*

## SMBus SERIAL PORT

The programming and microprocessor interface for the ADM1041 is a standard SMBus serial port, which consists of a clock line and a data line. The more rigorous requirements of the SMBus standard are specified in order to give the greatest noise immunity. The ADM1041 operates in slave mode only. If a microprocessor is not used, these pins can be configured to perform the $PS_{ON}$LINK and AC_OKLink functions. Note that this port is not intended to be connected to the customer's SMBus (or $I^2C$ bus). Continuous SMBus activity or an external bus fault interferes with the inter-ASIC communication, possibly preventing proper operation and proper fault reporting. If the customer needs status and control functions via the SMBus, it is recommended that a microprocessor with a hardware SMBus ($I^2C$) port be used for this interface. The microprocessor should access the ASICs via a second SMBus port, which may be emulated in software (subset of the full protocol).

### *SDA/$PS_{ON}$LINK*

The SDA pin normally carries data in and out of the ASIC during programming/configuration or while reading/writing by a microprocessor. If a microprocessor is not used, this pin can be configured as $PS_{ON}$LINK and can be connected to the same pin on other ADM1041s in the power supply. If a fault is detected in any ADM1041, causing it to shut down, it uses this pin to signal the other ADM1041s to also shut down. If an auto-restart has been configured, it also causes all ADM1041s to turn on together.

### *SCL/AC_OKLink*

The SCL pin normally provides a clock signal into the ASIC during programming/configuration or while reading/writing by a microprocessor. If a microprocessor is not used, this pin can be configured as AC_OKLink, and can be connected to the same pin on other ADM1041s in the power supply. This allows a single ADM1041 to be used for ac sensing and helps to synchronize the start-up of multiple ADM1041s.

### *ADD0*

This pin configures two bits of the chip address for the SMBus. It is three-level and can be pulled high to $V_{DD}$, pulled low to ground, or left floating (internally biased to 2.5 V). An additional bit may be set during configuration, which allows up to six ADM1041s to be used in a single power supply. The state of ADD0 is continuously sampled after $V_{DD}$ power-up. After the first time the ADM1041 is successfully addressed, the internal bias is released and ADD0 becomes high impedance.

## MICROPROCESSOR SUPPORT

The ADM1041 has many features that allow it to operate with the aid of a microprocessor. There are several reasons why a microprocessor might be used:

- To provide unusual logic and/or timing requirements, particularly for fault conditions.
- To drive one or more LEDs, including flashing, according to the status of the power supply.
- To replace other discrete circuits such as multiple OTP, extra output monitoring, fan speed control, and failure detection, and combine the status of these circuits with the status of the ADM1041s.
- To free up some pins on the ADM1041s. This could reduce the number of ASICs and therefore the cost.
- To interface to an external SMBus (or $I^2C$) for more detailed status reporting. The SMBus port in the ADM1041 is not intended for this purpose.
- To allow EEPROM space in ADM1041(s) or in the microprocessor to be used for FRU (VPD) data. A simple or complex microprocessor can be used according to the amount of additional functionality required. Note that the microprocessor is not intended to access or modify the EEPROM address space that is used for the configuration of the ADM1041(s).

### *Interfacing*

The microprocessor must access the ADM1041(s) via their on-board SMBus ($I^2C$) port. Since this port is also used for configuration of the ADM1041(s), the software must include a routine that avoids SMBus activity during the configuration process. The simplest interface is for the microprocessor to have an SMBus ($I^2C$) port implemented in hardware, but this may be more expensive. An alternative is to emulate the bus in software and to use two general-purpose logic I/O pins. Only a simple subset of the SMBus protocol need be emulated because the ADM1041 always operates as a slave device.

### *Configuring for a Microprocessor*

Except during initial configuration, all ADM1041 registers that need to be accessed are high speed CMOS devices that do not involve EEPROM. The Microprocessor Support table (Table 43) details the various registers, bits, and flags that can be read and written to, including explanations.

Note that for the microprocessor to gain control of the PSON and $AC_{SENSE}$ functions, the normal signal path in the ADM1041 must be configured to be broken. A separate configuration bit is allocated to each signal. The microprocessor can then write to the signal after the break as though the signal originated within the ADM1041 itself. The original signals can still be read prior to the break.

## BROADCASTING

In a power supply with multiple outputs, it is recommended that all outputs rise together. Because the SMBus is relatively slow, simply writing sequentially to the PSON signal in each ADM1041, for instance, causes a significant delay in the output rise of the last chip to be written. The ADM1041 avoids this problem by allocating a common broadcast address that all chips can respond to. To avoid data collisions, this feature should be used only for commands that do not initiate a reply.

## SMBus SERIAL INTERFACE

Control of the ADM1041 is carried out via the SMBus. The ADM1041 is connected to this bus as a slave device under the control of a master device.

The ADM1041 has a 7-bit serial bus slave address. When the device is powered up, it does so with a default serial bus address. The default power-on SMBus address for the device is 1010XXX binary, the three lowest address bits (A2 to A0) being defined by the state of the address pin, ADD0, and Bit 1 of Configuration Register 4 (ADD1). Because ADD0 has three possible states (tied to $V_{DD}$, tied to GND, or floating) and Config4 < 1 > can be high or low, there are a total of six possible addresses, as shown in Table 6.

## GENERAL SMBus TIMING

The SMBus specification defines specific conditions for different types of read and write operation. General SMBus read and write operations are shown in the timing diagrams of Figure 25, Figure 26, and Figure 27, and described in the following sections.

The general SMBus protocol operates as follows:

1. The master initiates data transfer by establishing a start condition, defined as a high-to-low transition on the serial data line SDA while the serial clock line SCL remains high. This indicates that a data stream will follow. All slave peripherals connected to the serial bus respond to the start condition and shift in the next 8 bits, consisting of a 7-bit slave address (MSB first), plus a R/$\overline{W}$ bit, which determines the direction of the data transfer, that is, whether data is written to or read from the slave device (0 = write, 1 = read).

   The peripheral whose address corresponds to the transmitted address responds by pulling the data line low during the low period before the ninth clock pulse, known as the Acknowledge bit, and holding it low during the high period of this clock pulse. All other devices on the bus now remain idle while the selected device waits for data to be read from or written to it. If the R/$\overline{W}$ bit is a 0, then the master writes to the slave device. If the R/$\overline{W}$ bit is a 1, the master reads from the slave device.

2. Data is sent over the serial bus in sequences of nine clock pulses, eight bits of data, followed by an Acknowledge bit from the slave device. Data transitions on the data line must occur during the low period of the clock signal and remain stable during the high period, because a low-to-high transition when the clock is high may be interpreted as a stop signal.

   If the operation is a write operation, the first data byte after the slave address is a command byte. This tells the slave device what to expect next. It may be an instruction such as telling the slave device to expect a block write, or it may simply be a register address that tells the slave where subsequent data is to be written.

   Because data can flow in only one direction as defined by the R/$\overline{W}$ bit, it is not possible to send a command to a slave device during a read operation. Before doing a read operation, it might be necessary to first do a write operation to tell the slave what sort of read operation to expect and/or the address from which data is to be read.

3. When all data bytes have been read or written, stop conditions are established. In write mode, the master pulls the data line high during the tenth clock pulse to assert a stop condition. In read mode, the master device releases the SDA line during the low period before the ninth clock pulse, but the slave device does not pull it low. This is known as No Acknowledge. The master then takes the data line low during the low period before the tenth clock pulse, then high during the tenth clock pulse to assert a stop condition.

**Note:** If it is required to perform several read or write operations in succession, the master can send a repeat start condition instead of a stop condition to begin a new operation.

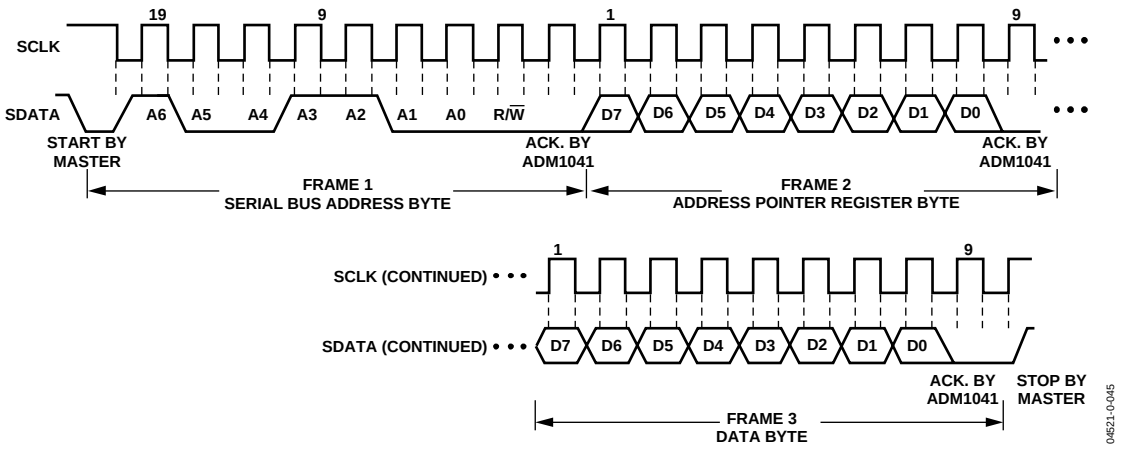


*Figure 25. Writing a Register Address to the Address Pointer Register, then Writing Data to the Selected Register*

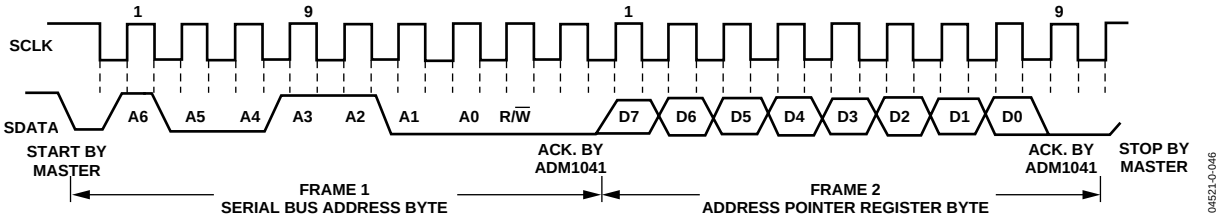


*Figure 26. Writing to the Address Pointer Register Only*

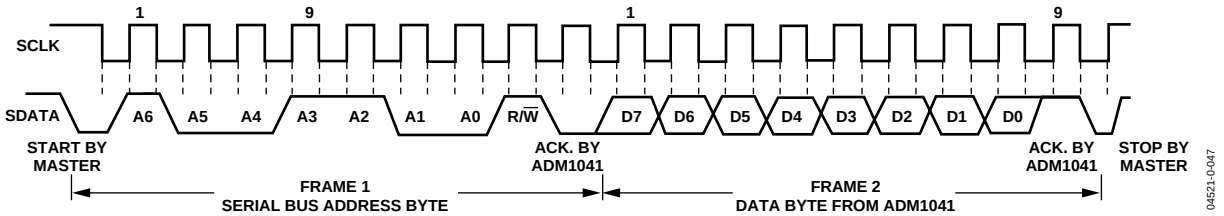


*Figure 27. Reading Data from a Previously Selected Register*

**Table 6. Device SMBus Addresses**

| ADD1 | ADD0 | A2 | A1 | A0 | Target Device |
|---|---|---|---|---|---|
| 0 | GND | 0 | 0 | 0 | 0 |
| 0 | $V_{DD}$ | 0 | 0 | 1 | 1 |
| 0 | NC | 1 | 0 | 0 | 4 |
| 1 | GND | 0 | 1 | 0 | 2 |
| 1 | $V_{DD}$ | 0 | 1 | 1 | 3 |
| 1 | NC | 1 | 0 | 1 | 5 |

**Note:** ADD1 is low by default. To access the additional three addresses it is necessary to set Config 4 < 1 > high and then perform a power cycle to allow the new address to be latched after the EEPROM download. Refer to the section on Extended SMBUS Addressing for more details.

## SMBus PROTOCOLS FOR RAM AND EEPROM

The ADM1041 contains volatile registers (RAM) and nonvolatile EEPROM. RAM occupies the address locations from 00h to 7Fh, while EEPROM occupies the address locations from 8000h to 813Fh.

The SMBus specification defines several protocols for different types of read and write operations. The ones used in the ADM1041 are discussed in the next sections. The following abbreviations are used in the diagrams:

S—START

P—STOP

R—READ

W—WRITE

A—ACKNOWLEDGE

$\overline{A}$—NO ACKNOWLEDGE

The ADM1041 uses the following SMBus write protocols.

### *SMBus Erase EEPROM Page Operations*

EEPROM memory can be written to only if it is effectively unprogrammed. Before writing to one or more locations that are already programmed, the page containing those locations must be erased. EEPROM ERASE is performed by sending a page erase command byte (A2h) followed by the page location of what you want to erase. (There is no need to set an erase bit in an EEPROM control/status register.)

The EEPROM consists of 16 pages of 32 bytes each; the register default EEPROM consists of 1 page of 32 bytes starting at 8100h.

**Table 7. EEPROM Page Layout**

| Page No. | EEPROM Location | Description |
|---|---|---|
| 1 | 8000h to 801Fh | Available FRU |
| 2 | 8020h to 803Fh | Available FRU |
| 3 | 8040h to 8050h | Available FRU |
| 4 | 8060h to 8070h | Available FRU |
| 5 | 8080h to 8090h | Available FRU |
| 6 | 80A0h to 80BFh | Available FRU |
| 7 | 80C0h to 80DFh | Available FRU |
| 8 | 80E0h to 80FFh | Available FRU |
| 9 | 8100h to 811Fh | Configuration Boot Registers |
| 10 | 8120h to 813Fh | ADI Registers |
| 11 | 8140h to 815Fh | Available FRU |
| 12 | 8160h to 817Fh | Available FRU |
| 13 | 8180h to 819Fh | Available FRU |
| 14 | 81A0h to 81BFh | Available FRU |
| 15 | 81C0h to 81DFh | Available FRU |
| 16 | 81E0h to 81FFh | ADI Registers |

The EEPROM page address consists of the EEPROM address high Byte 80h for FRU or 81h for register default and the three MSBs of the low byte. The lower five bits of the EEPROM address of the low byte are ignored during an erase operation.

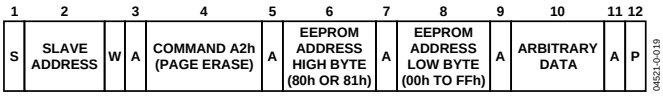


*Figure 28. EEPROM Page Erase Operation*

Page erasure takes approximately 20 ms. If the EEPROM is accessed before erasure is complete, the SMBus responds with No Acknowledge.

Figure 29 shows the peak $I_{DD}$ supply current during an EEPORM page erase operation. Decoupling capacitors of 10 µF and 100 nF are recommended on $V_{DD}$.

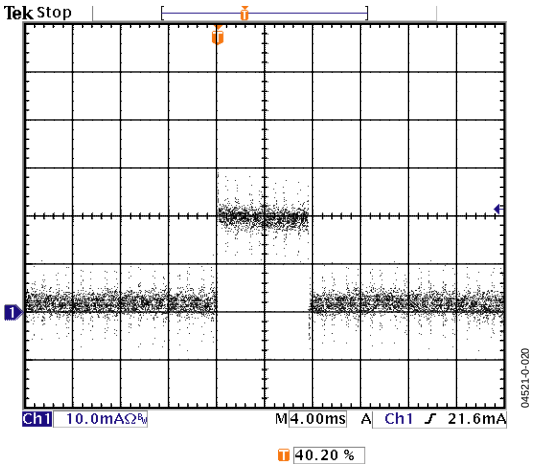


*Figure 29. EEPROM Page Erase Peak $I_{DD}$ Current*

### *SMBus Write Operations*

**Send Byte**

In this operation, the master device sends a single command byte to a slave device, as follows:

1. The master device asserts a start condition on SDA.
2. The master sends the 7-bit slave address followed by the write bit (low).
3. The addressed slave device asserts ACK on SDA.
4. The master sends a command code.
5. The slave asserts ACK on SDA.
6. The master asserts a stop condition on SDA and the transaction ends.

In the ADM1041, the send byte protocol is used to write a register address to RAM for a subsequent single-byte read from the same address or block read or write starting at that address. This is illustrated in Figure 30.

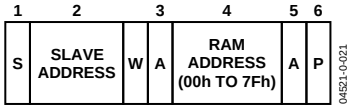


*Figure 30. Setting a RAM Address for Subsequent Read*

If it is required to read data from the RAM immediately after setting up the address, the master can assert a repeat start condition immediately after the final ACK and carry out a single-byte read, block read, or block write operation without asserting an intermediate stop condition.

**Write Byte/Word**

In this operation, the master device sends a command byte and one or two data bytes to the slave device, as follows:

1. The master device asserts a start condition on SDA.
2. The master sends the 7-bit slave address followed by the write bit (low).
3. The addressed slave device asserts ACK on SDA.
4. The master sends a command code.
5. The slave asserts ACK on SDA.
6. The master sends a data byte.
7. The slave asserts ACK on SDA.
8. The master sends a data byte (or may assert stop at this point).
9. The slave asserts ACK on SDA.
10. The master asserts a stop condition on SDA to end the transaction.

In the ADM1041, the write byte/word protocol is used for the following three purposes. The ADM1041 knows how to respond by the value of the command byte.

- Write a single byte of data to RAM. In this case, the command byte is the RAM address from 00h to 7Fh and the (only) data byte is the actual data. This is illustrated in Figure 31.

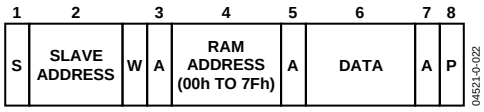


*Figure 31. Single-Byte Write to RAM*

- Set up a 2-byte EEPROM address for a subsequent read or block read. In this case, the command byte is the high byte of the EEPROM address (80h). The (only) data byte is the low byte of the EEPROM address. This is illustrated in Figure 32.

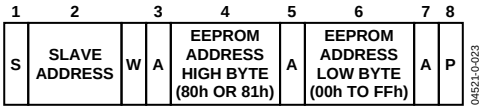


*Figure 32. Setting an EEPROM Address*

If it is required to read data from the EEPROM immediately after setting up the address, the master can assert a repeat start condition immediately after the final ACK and carry out a single-byte read or a block read without asserting an intermediate stop condition.

- Write a single byte of data to EEPROM. In this case, the command byte is the high byte of the EEPROM address, 80h or 81h. The first data byte is the low byte of the EEPROM address and the second data byte is the actual data. Bit 1 of EEPROM Register 3 must be set. This is illustrated in Figure 33.

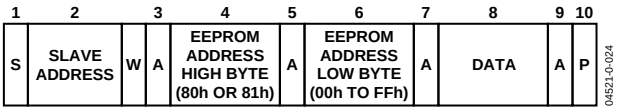


*Figure 33. Single-Byte Write to EEPROM*

If it is required to read data from the ASIC immediately after setting up the address, the master can assert a repeat start condition immediately after the final ACK and carry out a single-byte read, block read, or block write operation without asserting an intermediate stop condition.

### *Block Write*

In this operation, the master device writes a block of data to a slave device. Programming an EEPROM byte takes approximately 300 µs, which limits the SMBus clock for repeated or block write operations. The start address for a block write must have been set previously. In the case of the ADM1041, this is done by a send byte operation to set a RAM address or by a write byte/word operation to set an EEPROM address.

1. The master device asserts a start condition on SDA.
2. The master sends the 7-bit slave address followed by the write bit (low).
3. The addressed slave device asserts ACK on SDA.
4. The master sends a command code that tells the slave device to expect a block write. The ADM1041 command code for a block read is A0h (10100000).
5. The slave asserts ACK on SDA.

6. The master sends a data byte that tells the slave device how many data bytes will be sent. The SMBus specification allows a maximum of 32 data bytes to be sent in a block write.
7. The slave asserts ACK on SDA.
8. The master sends N data bytes.
9. The slave asserts ACK on SDA after each data byte.
10. The master asserts a stop condition on SDA to end the transaction.

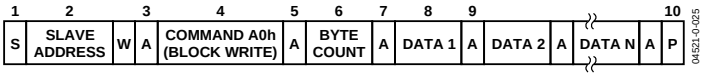


*Figure 34. Block Write to EEPROM or RAM*

When performing a block write to EEPROM, the page that contains the location to be written should not be write-protected (Register 03h) prior to sending the above SMBus packet. Block writes are limited to within a 32-byte page boundary and cannot cross into the next page.

## SMBus READ OPERATIONS

The ADM1041 uses the following SMBus read protocols.

**Receive Byte**

In this operation, the master device receives a single byte from a slave device, as follows:

1. The master device asserts a start condition on SDA.
2. The master sends the 7-bit slave address followed by the read bit (high).
3. The addressed slave device asserts ACK on SDA.
4. The master receives a data byte.
5. The master asserts NO ACK on SDA.
6. The master asserts a stop condition on SDA and the transaction ends.

In the ADM1041, the receive byte protocol is used to read a single byte of data from a RAM or EEPROM location whose address has been set previously by a send byte or write byte/word operation. This is illustrated in Figure 35.

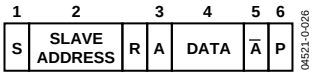


*Figure 35. Single-Byte Read from EEPROM or RAM*

**Block Read**

In this operation, the master device reads a block of data from a slave device. The start address for a block read must previously have been set. In the case of the ADM1041, this is done by a send byte operation to set a RAM address or by a write byte/word operation to set an EEPROM address. The block read operation itself consists of a send byte operation that sends a block read command to the slave, immediately followed by a repeat start, and a read operation that reads out multiple data bytes, as follows:

1. The master device asserts a start condition on SDA.
2. The master sends the 7-bit slave address followed by the write bit (low).
3. The addressed slave device asserts ACK on SDA.
4. The master sends a command code that tells the slave device to expect a block read. The ADM1041 command code for a block read is A1h (10100001).
5. The slave asserts ACK on SDA.
6. The master asserts a repeat start condition on SDA.
7. The master sends the 7-bit slave address followed by the read bit (high).
8. The slave asserts ACK on SDA.
9. The master receives a byte count data byte that tells it how many data bytes will be received. The SMBus specification allows a maximum of 32 data bytes to be received in a block read.
10. The master asserts ACK on SDA.
11. The master receives N data bytes.
12. The master asserts ACK on SDA after each data byte.
13. The slave does not acknowledge after the Nth data byte.
14. The master asserts a stop condition on SDA to end the transaction.

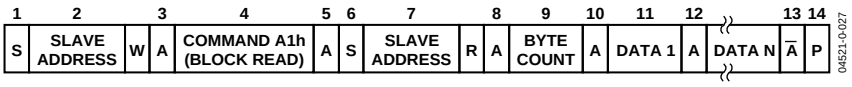


*Figure 36. Block Read from EEPROM or RAM*

**Notes on SMBus Read Operations**

The SMBus interface of the ASIC cannot load the SMBUS if no power is applied to the ASIC. This requirement allows a power supply to be disconnected from the ac supply while still installed in a power subsystem.

When using the SMBus interface, a write always consists of the ADM1041 SMBus interface address byte, followed by the internal address register byte, and then the data byte. There are two cases for a read:

- If the internal address register is known to be at the desired address, simply read the ASIC with the SMBus interface address byte, followed by the data byte read from the ASIC. The internal address pointer increments if a block mode operation is in progress; data values of 0 are returned if the register address limit of 7Fh is exceeded, or if unused registers in the address range 00h to 7Fh are accessed. If the address register is pointing at EEPROM memory, that is 8000h, and the address reaches its limit of 80FFh, it does not roll over to Address 8100h on the next access.

  Additional accesses do not increment the address pointer, all reads return 00h, and all writes complete normally but do not change any internal register or EEPROM location. If the address register is pointing at EEPROM memory, that is 81xxh, and the address reaches its limit of 813Fh, it does not roll over to Address 8140h on the next access.

  Additional accesses do not increment the address pointer, all reads return 00h, and all writes complete normally but not change any internal register or EEPROM location. Note that for byte reads, the internal address does not auto increment.

- If the internal address register value is unknown, write to the ADM1041 with the SMBus interface address byte, followed by the internal address register byte. Then restart the serial communication with a read consisting of the SMBus interface address byte, followed by the data byte read from the ADM1041.

## SMBus ALERT RESPONSE ADDRESS (ARA)

The ADM1041's CBD/ALERT pin can be configured to respond to a variety of fault signals and can be used as an interrupt to a microprocessor. The pins from several ADM1041s may be wire-ORed. When the SMBus master (microprocessor) detects an alert request, it normally needs to read the alert status of each device to identify the source of the alert.

The SMBus ARA provides an easier method to locate the source of a such an alert. When the master receives an alert, it can send a general call address (0001100) over the bus. The device asserting the alert responds by returning its own slave address to the master.

If more than one device is asserting an alert, all alerting devices try to respond with their slave addresses, but an arbitration process ensures that only the lowest slave address is received by the master. If the slave device has its alert configured as latching, it sends a command via the SMBus to clear the latch. The master should then check if the alert line is still asserted, and, if so, repeat the ARA call to service the next alert. Note that an alerting slave does not respond to an ARA call unless it is configured in SMBus mode (not AC_OKLink/$PS_{ON}$LINK) and up_pson_m is set. The ADM1041 supports the SMBus (ARA) function.

## SUPPORT FOR SMBus 1.1

SMBus 1.1 optionally adds a CRC8 frame check sequence to check if transmissions are received correctly. This is particularly useful for long block read/write EEPROM operations, when the SMBus is heavily loaded or in a noisy environment. The CRC8 frame can be used to guarantee reliability of the EEPROM.

## LAYOUT CONSIDERATIONS

Noise coupling into the digital lines (greater than 150 mV), overshoot greater than $V_{CC}$ and undershoot less than GND may prevent successful SMBus communication with the ADM1041. SMBus No Acknowledge is the most common symptom, causing unnecessary traffic on the bus. Although the SMBus maximum frequency of communication is rather low (400 kHz max), care still needs to be taken to ensure proper termination within a system with multiple parts on the bus and long printed circuit board traces. A 5.1 kΩ resistor can be added in series with the SDA and SCL lines to help filter noise and ringing. Minimize noise coupling by keeping digital traces out of switching power supply areas and ensure that digital lines containing high speed data communications cross at right angles to the SDA and SCL lines.

## POWER-UP AUTO-CONFIGURATION

After power-up or reset, the ADM1041 automatically reads the content of a 32-byte block of EEPROM memory that starts at 8100h and transfers the contents into the appropriate trim-level and control registers (00h to 1Bh). In this way, the ADM1041 can be preconfigured with the desired operating characteristics without the host system having to download the data over the SMBus. This does not preclude the possibility of modifying the configuration during normal operation.

Figure 37 shows a block diagram of the EEPROM download at power-up or power-on reset.

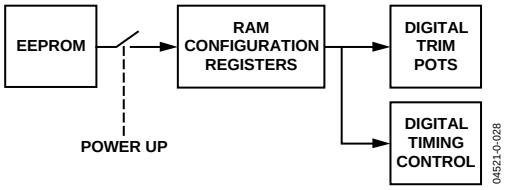


*Figure 37. EEPROM Download*

## EXTENDED SMBus ADDRESSING

A potential problem exists when using more than three ADM1041s in a single power supply. The first time the device is powered up, Bit 1 of Configuration Register 1 (ADD1) is 0. This means that only three device addresses are initially available defined by ADD0; if there are more than three devices in a system, two or more of them will have duplicate addresses. See Figure 38.

To overcome this problem, the ICT pin has additional functionality. Taking ICT below GND temporarily disables the SMBus function of the device. Thus, if the ICT pin of all devices in which ADD1 is to remain 0 are taken negative, the ADD1 bits of all other devices can be set to 1 via the SMBus. Each device then has a unique address. Internal diodes clamp the negative voltage to about 0.6 V, and care should be taken to limit the current to less than approximately 5 mA on each ICT input to prevent the possibility of damage or latch-up. The suggested current is 3 mA. One example of a suitable circuit is given in Figure 38. The ADM1041s can then be configured and trimmed. If required, AC_OKLink and $PS_{ON}$LINK must be configured last. If ICT is used for its intended purpose as a current transformer input, care must be taken with the circuit design to allow the extended SMBus addressing to work.

## BACKDOOR ACCESS

After SCL and SDA have been configured as AC_OKLink and $PS_{ON}$LINK, it may be desired to recover the SMBus access to the ADM1041. Changes may be necessary to the internal configuration or trim bits. This is achieved by holding the SCL and SDA pins at 0 V (ground) while cycling $V_{DD}$. SCL and SDA then revert to SMBus operation. See Figure 38.

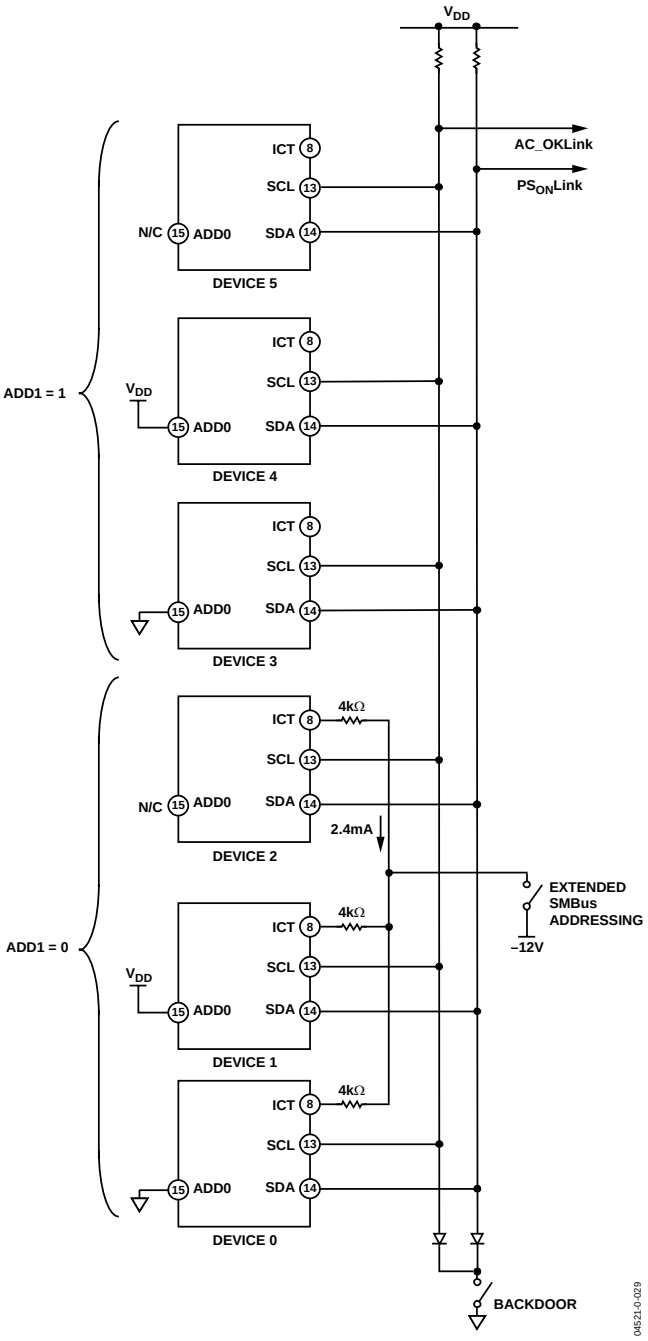


*Figure 38. Extended SMBus Addressing and Backdoor Access*

# REGISTER LISTING

Table 8.

| Register Address | Name | Power-On Value | Factory EEPROM Value |
|---|---|---|---|
| 00h/2Ah | Status1/Status1 Mirror Latched | XXh—Depends on status of ADM1041 at power-up. | |
| 01h/2Bh | Status2/Status2 Mirror Latched | XXh—Depends on status of ADM1041 at power-up. | |
| 02h/2Ch | Status3/Status3 Mirror Latched | XXh—Depends on status of ADM1041 at power-up. | |
| 03h | Calibration Bits | From EEPROM Register 8103h | 00h |
| 04h | Current Sense CC | From EEPROM Register 8104h | 00h |
| 05h | Current Share Offset | From EEPROM Register 8105h | 00h |
| 06h | Current Share Slope | From EEPROM Register 8106h | FEh |
| 07h | EEPROM_lock | From EEPROM Register 8107h | 20h |
| 08h | Load OV Fine | From EEPROM Register 8108h | 00h |
| 09h | Local UVP Trim | From EEPROM Register 8109h | 00h |
| 0Ah | Local OVP Trim | From EEPROM Register 810Ah | 00h |
| 0Bh | OTP Trim | From EEPROM Register 810Bh | 00h |
| 0Ch | ACSNS Trim | From EEPROM Register 810Ch | 00h |
| 0Dh | Config1 | From EEPROM Register 810Dh | 00h |
| 0Eh | Config2 | From EEPROM Register 810Eh | 00h |
| 0Fh | Config3 | From EEPROM Register 810Fh | 00h |
| 10h | Config4 | From EEPROM Register 8110h | 00h |
| 11h | Config5 | From EEPROM Register 8111h | 00h |
| 12h | Config6 | From EEPROM Register 8112h | 00h |
| 13h | Config7 | From EEPROM Register 8113h | 00h |
| 14h | Current Sense Divider Error Trim | From EEPROM Register 8114h | XXh – Factory Cal Values |
| 15h | Current Sense Amplifer Offset Trim | From EEPROM Register 8115h | XXh – Factory Cal Values |
| 16h | Current Sense Config 1 | From EEPROM Register 8116h | XXh – Factory Cal Values |
| 17h | Current Sense Config 2 | From EEPROM Register 8117h | XXh – Factory Cal Values |
| 18h | UV Clamp Trim | From EEPROM Register 8118h | 00h |
| 19h | Diff Sense Trim | From EEPROM Register 8119h | 00h |
| 1Ah | Sel CBD/SMBAlert1 | From EEPROM Register 811Ah | 00h |
| 1Bh | Sel CBD/SMBAlert2 | From EEPROM Register 811Bh | 00h |
| 1Ch | Manufacturer's ID | 41h—Hardwired by manufacturer | |
| 1Dh | Revision Register | Xh—Hardwired by Manufacturer | |
| 20h–29h | Reserved for Manufacturer | | |
| 2Ah | Status1 Mirror Latched | XXh—Depends on status of ADM1041 at power-up. | |
| 2Bh | Status2 Mirror Latched | XXh—Depends on status of ADM1041 at power-up. | |
| 2Ch | Status3 Mirror Latched | XXh—Depends on status of ADM1041 at power-up. | |
| 2Dh–2Eh | Reserved for Manufacturer | | |
| 8000h–81FFh | EEPROM | | |

# DETAILED REGISTER DESCRIPTIONS

**Table 9. Register 00h, Status1. Power-On Default XXh (Refer to the logic schematic—Figure 24.)**

| Bit No. | Name | R/W | Description |
|---|---|---|---|
| 7 | ovfault | R | Overvoltage fault has occurred. |
| 6 | uvfault | R | Undervoltage fault has occurred. |
| 5 | ocpto | R | Overcurrent has occured and timed out (ocpf is in Status3). |
| 4 | mfg1 | R | MON1 flag. |
| 3 | mfg2 | R | MON2 flag. |
| 2 | mfg3 | R | MON3 flag. |
| 1 | mfg4 | R | MON4 flag. |
| 0 | mfg5 | R | MON5 flag. |

**Table 10. Register 01h, Status2. Power-On Default XXh (Refer to the logic schematic—Figure 24.)**

| Bit No. | Name | R/W | Description |
|---|---|---|---|
| 7 | Share_OK | R | Current share is within limits. |
| 6 | OrFET_OK | R | ORing MOSFET is on. |
| 5 | REVERSE_OK | R | reverseok—No reverse voltage has occured across the ORing MOSFET. |
| 4 | $V_{DD}$_OK | R | $V_{DD}$ is within limits . |
| 3 | GND_OK | R | Connection of GND pin is good. |
| 2 | intrefok | R | Internal voltage reference is within limits. |
| 1 | extrefok | R | External voltage reference is within limits. |
| 0 | vddov | R | $V_{DD}$ is above its OV threshold. |

**Table 11. Register 02h, Status3. Power-On Default XXh (Refer to the logic schematic—Figure 24.)**

| Bit No. | Name | R/W | Description |
|---|---|---|---|
| 7 | m_acsns_r | R | Reflects the status on $AC_{SENSE}1/AC_{SENSE}2$. |
| 6 | m_pson_r | R | Reflects the status of PSON. |
| 5 | m_penok_r | R | Reflects the status of PEN. |
| 4 | m_psonok_r | R | Status of $PS_{ON}$LINK. |
| 3 | m_DC_OK_r | R | Status of DC_OK. |
| 2 | ocpf | R | An overcurrent has occured, direct from comparator |
| 1 | PULSE_OK | R | Pulses are present at the PULSE pin. |
| 0 | fault | R | Fault latch. |

**Table 12. Register 03h, Calibration Bits. Power-On Default from EEPROM Register 8103h during Power-Up.**

| Bit No. | Name | R/W | Description | | |
|---|---|---|---|---|---|
| 7–6 | rev_volt_off | R/$\overline{W}$ | Reverse Voltage Detector Turn Off Threshold: | | |
| | | | b7 | b6 | Function |
| | | | 0 | 0 | 100 mV |
| | | | 0 | 1 | 150 mV |
| | | | 1 | 0 | 200 mV |
| | | | 1 | 1 | 250 mV |
| 5–4 | rev_volt_on | R/$\overline{W}$ | Reverse Voltage Detector Turn On Threshold: | | |
| | | | b5 | b4 | Function |
| | | | 0 | 0 | 20 mV |
| | | | 0 | 1 | 30 mV |
| | | | 1 | 0 | 40 mV |
| | | | 1 | 1 | 50 mV |
| 3 | gatepen | R/$\overline{W}$ | Gatepen Option. When set, PEN is gated by acsok. | | |
| 2 | gateramp | R/$\overline{W}$ | Gateramp Option. When set, soft-start is gated by acsok. | | |

| Bit No. | Name | R/W | Description | | |
|---|---|---|---|---|---|
| 1–0 | loadov_recover | R/$\overline{W}$ | b1 | b0 | Function |
| | | | 0 | 0 | Add 100 µs delay |
| | | | 0 | 1 | Add 200 µs delay |
| | | | 1 | 0 | Add 300 µs delay |
| | | | 1 | 1 | Add 400 µs delay |

**Table 13. Register 04h, Current Sense CC. Power-On Default from EEPROM Register 8104h during Power-Up.**

| Bit No. | Name | R/W | Description | | |
|---|---|---|---|---|---|
| 7–3 | curr_limit | R/$\overline{W}$ | This register contains current sense trim level setting at which current limiting starts | | |
| 2 | Share_OK_Window | | Share_OK Window Comparator Thresholds | | |
| 1–0 | Share_OK_thresh | R/$\overline{W}$ | b1 | b0 | Function |
| | | | 0 | 0 | ±100 mV |
| | | | 0 | 1 | ±200 mV |
| | | | 1 | 0 | ±300 mV |
| | | | 1 | 1 | ±400 mV |

**Table 14. Register 05h, Current Share Offset. Power-On Default from EEPROM Register 8105h during Power-Up.**

| Bit No. | Name | R/W | Description |
|---|---|---|---|
| 7–0 | $I_{SHARE}$_offset | R/$\overline{W}$ | This register contains current share offset trim level. Writing 00h corresponds to the min offset. FFh corresponds to maximum offset. See the Current Limit Error Amplifier section in the Specifications for more information. |

**Table 15. Register 06h , Current Share Slope. Power-On Default from EEPROM Register 8106h during Power-Up.**

| Bit No. | Name | R/W | Description |
|---|---|---|---|
| 7–1 | ISHARE_slope | R/$\overline{W}$ | This register contains current share slope trim level. |
| 0 | Reserved | X | Don't Care |

**Table 16. Register 07h, EEPROM_lock. Power-On Default from EEPROM Register 8107h during Power-Up.**

| Bit No. | Name | R/W | Description | |
|---|---|---|---|---|
| 7 | Reserved | X | Don't Care | |
| 6 | lock6 | R/$\overline{W}$ | Locks 8140h–817Fh | Available FRU. |
| 5 | lock5 | R/$\overline{W}$ | Locks 8120h–813Fh | ADI cal registers, Locked by manufacturer. |
| 4 | lock4 | R/$\overline{W}$ | Locks 8100h–811Fh | ADM1041 Config Boot registers. |
| 3 | lock3 | R/$\overline{W}$ | Locks 80C0h–80FFh | Available FRU. |
| 2 | lock2 | R/$\overline{W}$ | Locks 8080h–80BFh | Available FRU. |
| 1 | lock1 | R/$\overline{W}$ | Locks 8040h–807Fh | Available FRU. |
| 0 | lock0 | R/$\overline{W}$ | Locks 8000h–803Fh | Available FRU. |

**Table 17. Register 08h, Load OV Trim. Power-On Default from EEPROM Register 8108h during Power-Up.**

| Bit No. | Name | R/W | Description |
|---|---|---|---|
| 7–0 | load_ov | R/$\overline{W}$ | Load OV trim |

**Table 18. Register 09h, Local UVP Trim. Power-On Default from EEPROM Register 8109h during Power-Up.**

| Bit No. | Name | R/W | Description |
|---|---|---|---|
| 7–0 | local_uvp | R/$\overline{W}$ | Local UVP trim |

**Table 19. Register 0Ah, Local OVP Trim. Power-On Default from EEPROM Register 810Ah during Power-Up.**

| Bit No. | Name | R/W | Description |
|---|---|---|---|
| 7–0 | local_ovp | R/$\overline{W}$ | Local OVP Trim |

**Table 20. Register 0Bh, OTP Trim. Power-On Default from EEPROM Register 810Bh during Power-Up.**

| Bit No. | Name | R/W | Description |
|---|---|---|---|
| 7–4 | otp_trim | R/$\overline{W}$ | OTP Threshold |
| 3–1 | reserved | X | Don't Care |
| 0 | softotp | R/$\overline{W}$ | Configure Soft OTP Option<br>0 = mon5 +ve ov = ov<br>1 = mon5 +ve ov = softotp |

**Table 21. Register 0Ch, $AC_{SENSE}$ Trim. Power-On Default from EEPROM Register 810Ch during Power-Up.**

| Bit No. | Name | R/W | Description |
|---|---|---|---|
| 7–3 | acsns_thresh | R/$\overline{W}$ | $AC_{SENSE}$ Threshold Trim Settings |
| 2–0 | acsns_hyst | R/$\overline{W}$ | $AC_{SENSE}$ Hysteresis Trim Settings |

**Table 22. Register 0Dh, Config1. Power-On Default from EEPROM Register 810Dh during Power-Up.**

| Bit No. | Name | R/W | Description | | | | | | | |
|---|---|---|---|---|---|---|---|---|---|---|
| 7 | up_pson_m | R/$\overline{W}$ | 0 = internal PSON. | | | | | | | |
| | | | 1 = support via SMBus. Selects PSON from config6 < 1 > = m_pson_w. | | | | | | | |
| 6 | reserved | X | Don't Care. | | | | | | | |
| 5 | reserved | X | Don't Care. | | | | | | | |
| 4 | uvbm | R/$\overline{W}$ | Undervoltage Blanking Mode. | | | | | | | |
| | | | uvbm = 1: blanking-hold period starts from recovery of AC_OK. | | | | | | | |
| | | | uvbm = 0: blanking-hold period starts following SCL = 0 while i2cm = 1. | | | | | | | |
| 3–1 | mn1s2, mn1s1, mn1s0 | R/$\overline{W}$ | b3 | b2 | b1 | option | | mfg1 | ov | uv |
| | | | 0 | 0 | 0 | iopin = ACSNS1 | | | | (true = high) |
| | | | 0 | 0 | 1 | iopin = ACSNS1 | | | | (true = high) |
| | | | 0 | 1 | 0 | +ve ov | iopin < 1.15 V | 0 | 0 | 0 |
| | | | | | | | iopin > 1.25 V | 1 | 1 | 0 |
| | | | 0 | 1 | 1 | +ve uv | iopin < 1.25 V | 0 | 0 | 1 |
| | | | | | | | iopin > 1.35 V | 1 | 0 | 0 |
| | | | 1 | 0 | 0 | –ve ov | iopin < 1.25 V | 0 | 1 | 0 |
| | | | | | | | iopin > 1.35 V | 1 | 0 | 0 |
| | | | 1 | 0 | 1 | –ve uv | iopin < 1.15 V | 0 | 0 | 0 |
| | | | | | | | iopin > 1.25 V | 1 | 0 | 1 |
| | | | 1 | 1 | 0 | flag | iopin < 1.15 V | 0 | 0 | 0 |
| | | | | | | | iopin > 1.25 V | 1 | 0 | 0 |
| | | | 1 | 1 | 1 | flag | iopin < 1.15 V | 1 | 0 | 0 |
| | | | | | | | iopin > 1.25 V | 0 | 0 | 0 |
| 0 | i2cmb | R/$\overline{W}$ | 0 = pins are configured as SDA/SCL (default). | | | | | | | |
| | | | 1 = SCL pin is configured as AC_OKLink output. | | | | | | | |
| | | | SDA pin is configured as $PS_{ON}$LINK output. | | | | | | | |

**Table 23. Register 0Eh, Config2. Power-On Default from EEPROM Register 810Eh during Power-Up.**

| Bit No. | Name | R/W | Description | | | | | | | | |
|---|---|---|---|---|---|---|---|---|---|---|---|
| 7–5 | mn2s2, mn2s1, mn2s0 | $\overline{W}$ | b7 | b6 | b5 | option | | mfg2 | Ov | uv | |
| | | | 0 | 0 | 0 | iopin = $AC_{SENSE}2$ | | | | | (true = high) |
| | | | 0 | 0 | 1 | iopin = $AC_{SENSE}2$ | | | | | (true = high) |
| | | | 0 | 1 | 0 | +ve ov | iopin < 1.15 V | 0 | 0 | 0 | |
| | | | | | | | iopin > 1.25 V | 1 | 1 | 0 | |
| | | | 0 | 1 | 1 | +ve uv | iopin < 1.25 V | 0 | 0 | 1 | |
| | | | | | | | iopin > 1.35 V | 1 | 0 | 0 | |
| | | | 1 | 0 | 0 | −ve ov | iopin < 1.25 V | 0 | 1 | 0 | |
| | | | | | | | iopin > 1.35 V | 1 | 0 | 0 | |
| | | | 1 | 0 | 1 | −ve uv | iopin < 1.15 V | 0 | 0 | 0 | |
| | | | | | | | iopin > 1.25 V | 1 | 0 | 1 | |
| | | | 1 | 1 | 0 | flag | iopin < 1.15 V | 0 | 0 | 0 | |
| | | | | | | | iopin > 1.25 V | 1 | 0 | 0 | |
| | | | 1 | 1 | 1 | flag | iopin > 1.25 V | 1 | 0 | 0 | |
| | | | | | | | iopin > 1.25 V | 0 | 0 | 0 | |
| 4–2 | mn3s2, mn3s1, mn3s0 | R/$\overline{W}$ | b4 | b3 | b2 | option | | mfg3 | ov | uv | |
| | | | 0 | 0 | 0 | iopin = PSON | | | | | (true = low) |
| | | | 0 | 0 | 1 | iopin = PSON | | | | | (true = high) |
| | | | 0 | 1 | 0 | +ve ov | iopin < 1.15 V | 0 | 0 | 0 | |
| | | | | | | | iopin > 1.25 V | 1 | 1 | 0 | |
| | | | 0 | 1 | 1 | +ve uv | iopin < 1.25 V | 0 | 0 | 1 | |
| | | | | | | | iopin > 1.35 V | 1 | 0 | 0 | |
| | | | 1 | 0 | 0 | −ve ov | iopin < 1.25 V | 0 | 1 | 0 | |
| | | | | | | | iopin > 1.35 V | 1 | 0 | 0 | |
| | | | 1 | 0 | 1 | −ve uv | iopin < 1.15 V | 0 | 0 | 0 | |
| | | | | | | | iopin > 1.25 V | 1 | 0 | 1 | |
| | | | 1 | 1 | 0 | flag | iopin < 1.15 V | 0 | 0 | 0 | |
| | | | | | | | iopin > 1.25 V | 1 | 0 | 0 | |
| | | | 1 | 1 | 1 | flag | iopin < 1.15 V | 1 | 0 | 0 | |
| | | | | | | | iopin > 1.25 V | 0 | 0 | 0 | |
| 1–0 | pokts1, pokts0 | R/$\overline{W}$ | DC_OKon_delay | | | | | | | | |
| | | | b1 | b0 | | option | | | | | |
| | | | 0 | 0 | | 400 ms | | | | | |
| | | | 0 | 1 | | 200 ms | | | | | |
| | | | 1 | 0 | | 800 ms | | | | | |
| | | | 1 | 1 | | 1600 ms | | | | | |

**Table 24. Register 0Fh, Config3. Power-On Default from EEPROM Register 810Fh during Power-Up.**

| Bit No. | Name | R/W | Description | | | | | | | |
|---|---|---|---|---|---|---|---|---|---|---|
| 7–5 | mn4s2, mn4s1, mn4s0 | R/$\overline{W}$ | b7 | b6 | b5 | option | mfg4 | ov | uv | |
| | | | 0 | 0 | 0 | iopin = DC_OK | | | | Refer to the Configuration table (Table 45) |
| | | | 0 | 0 | 1 | iopin = DC_OK | | | | |
| | | | 0 | 1 | 0 | +ve ov iopin < 1.15 V | 0 | 0 | 0 | |
| | | | | | | iopin > 1.25 V | 1 | 1 | 0 | |
| | | | 0 | 1 | 1 | +ve uv iopin < 1.25 V | 0 | 0 | 1 | |
| | | | | | | iopin > 1.35 V | 1 | 0 | 0 | |
| | | | 1 | 0 | 0 | −ve ov iopin < 1.25 V | 0 | 1 | 0 | |
| | | | | | | iopin > 1.35 V | 1 | 0 | 0 | |
| | | | 1 | 0 | 1 | −ve uv iopin < 1.15 V | 0 | 0 | 0 | |
| | | | | | | iopin > 1.25 V | 1 | 0 | 1 | |
| | | | 1 | 1 | 0 | flag iopin < 1.15 V | 0 | 0 | 0 | |
| | | | | | | iopin > 1.25 V | 1 | 0 | 0 | |
| | | | 1 | 1 | 1 | flag iopin < 1.15 V | 0 | 0 | 0 | |
| | | | | | | iopin > 1.25 V | 0 | 0 | 0 | |
| 4–2 | mn5s2, mn5s1, mn5s0 | R/$\overline{W}$ | b4 | b3 | b2 | option | mfg5 | ov | uv | Refer to the Configuration table (Table 45) |
| | | | 0 | 0 | 0 | iopin = AC_OK | | | | |
| | | | 0 | 0 | 1 | iopin = AC_OK | | | | |
| | | | 0 | 1 | 0 | +ve ov iopin < vdac | 0 | 0 | 0 | |
| | | | | | | iopin > vdac | 1 | 1 | 0 | |
| | | | 0 | 1 | 1 | +ve uv iopin < vdac | 0 | 0 | 1 | |
| | | | | | | iopin > vdac | 1 | 0 | 0 | |
| | | | 1 | 0 | 0 | −ve ov iopin < vdac | 0 | 1 | 0 | |
| | | | | | | iopin > vdac | 1 | 0 | 0 | |
| | | | 1 | 0 | 1 | −ve uv iopin < vdac | 0 | 0 | 0 | |
| | | | | | | iopin > vdac | 1 | 0 | 1 | |
| | | | 1 | 1 | 0 | flag iopin < vdac | 0 | 0 | 0 | |
| | | | | | | iopin > vdac | 1 | 0 | 0 | |
| | | | 1 | 1 | 1 | vref out (e.g., 2.5 V $V_{REF}$ | | | | |
| 1–0 | psonts1, psonts0 | R/$\overline{W}$ | PSON debounce time: | | | | | | | |
| | | | b1 | b0 | | option | | | | |
| | | | 0 | 0 | | 80 ms | | | | |
| | | | 1 | 0 | | 0 ms (no debounce) | | | | |
| | | | 1 | 0 | | 40 ms | | | | |
| | | | 1 | 1 | | 160 ms | | | | |

**Table 25. Register 10h, Config4. Power-On Default from EEPROM Register 8110h during Power-Up.**

| Bit No. | Name | R/W | Description | | |
|---|---|---|---|---|---|
| 7–6 | DC_OKoff_delay | R/$\overline{W}$ | DC_OKoff delay (Power-Off Warn Delay) | | |
| | | | b7 | b6 | option |
| | | | 0 | 0 | 2 ms |
| | | | 0 | 1 | 0 ms |
| | | | 1 | 0 | 1 ms |
| | | | 1 | 1 | 4 ms |
| 5–4 | ISHARE_capture | R/$\overline{W}$ | b5 | b4 | option |
| | | | 0 | 0 | 1% |

| Bit No. | Name | R/W | Description |
|---|---|---|---|
| | | | 0 1 2% |
| | | | 1 0 3% |
| | | | 1 1 4% |
| 3–2 | ssrs1, ssrs0 | R/$\overline{W}$ | Soft-Start Step |
| | | | b3 b2 Rise Time |
| | | | 0 0 300 µs |
| | | | 0 1 10 ms |
| | | | 1 0 20 ms |
| | | | 1 1 40 ms |
| 1 | add1 | R/$\overline{W}$ | EEPROM programmable second address bit. |
| 0 | trim_lock | R/$\overline{W}$ | When this bit is set, the trim registers including this register are not writable via SMBus. To make registers writable again, the trim-lock bit in the EEPROM must first be erased and the value downloaded using either power-up or test download. |

**Table 26. Register 11h, Config5. Power-On Default from EEPROM Register 8111h 8110h during Power-Up.**

| Bit No. | Name | R/W | Description |
|---|---|---|---|
| 7 | curr_lim_dis | R/$\overline{W}$ | Mask effect of OCP to general logic (status flag still gets asserted) when curr_lim_dis = 1. |
| 6 | polpen0 | R/$\overline{W}$ | Sets polarity of PEN output. Refer to the Configuration table (Table 45). |
| 5 | polcbd0 | R/$\overline{W}$ | Sets polarity of CBD output. Refer to the Configuration table (Table 45). |
| 4–3 | Reserved | X | Don't Care. |
| 2 | ocpts2 | R/$\overline{W}$ | Set this bit to 1 when 0 OCP ridethrough is required. A small delay still exists. Refer to Reg 12h and the Configuration table (Table 45). |
| 1 | gndok_dis | R/$\overline{W}$ | Disable gndok input to power management debounce logic. |
| 0 | cbdlm | R/$\overline{W}$ | Select CBD latch mode. 0 = nonlatching; 1 = latching. |

**Table 27. Register 12h, Config6. Power-On Default from EEPROM Register 8112h 8110h during Power-Up.**

| Bit No. | Name | R/W | Description |
|---|---|---|---|
| 7 | rsm | R/$\overline{W}$ | Restart Mode. When rsm = 1, the circuit attempts to restart the supply after an undervoltage or overcurrent at about 1 second intervals. |
| | | | Latch Mode. When rsm = 0, UV and OC faults latch the output off. Cycling PSON or removing the supply to the IC is then required to reset the latch and permit a restart. |
| 6 | up_AC_OK_m | R/$\overline{W}$ | Configure microprocessor to control/gate signal from acinok to acsok. |
| | | | 0 = standalone. |
| | | | 1 = microprocessor support mode. |
| 5 | m_acsns_w | (W) | Microcessor control of acsok ($AC_{SENSE}$). |
| 4–3 | ocpts1, ocpts0 | R/$\overline{W}$ | OCP Ridethrough (Reg 11h[2] = 0) OCP Ridethrough (Reg11h[2] = 1) |
| | | | b4 b3 Period b4 b3 Period |
| | | | 0 0 1 second 0 0 128 µs |
| | | | 0 1 2 seconds 0 1 256 µs |
| | | | 1 0 3 seconds 1 0 384 µs |
| | | | 1 1 4 seconds 1 1 512 µs |
| 2 | acss | (W) | AC Sense Mode. 0 means AC_OK is derived from $AC_{SENSE}1$, whereas 1 means AC_OK is derived from $AC_{SENSE}2$. |
| 1 | m_pson_w | (W) | Microprocessor control of pson. |
| 0 | $I_{SHARE}$_clamp | R/$\overline{W}$ | 0 = 75%. Set current share clamp release threshold. |
| | | | 1 = 88%. |

**Table 28. Register 13h, Config7. Power-On Default from EEPROM Register 8113h during Power-Up.**

| Bit No. | Name | R/W | Description |
|---|---|---|---|

| Bit No. | Name | R/W | Description |
|---|---|---|---|
| 7 | polpen1 | R/$\overline{W}$ | Sets polarity of PEN output. Refer to the Configuration table (Table 45). |
| 6 | polcbd1 | R/$\overline{W}$ | Sets polarity of CBD output. Refer to the Configuration table (Table 45). |
| 5 | polDC_OK1 | R/$\overline{W}$ | Sets polarity of DC_OK output. Refer to the Configuration table (Table 45). |
| 4 | polAC_OK1 | R/$\overline{W}$ | Sets polarity of AC_OK output. Refer to the Configuration table (Table 45). |
| 3 | polfg | R/$\overline{W}$ | Sets polarity of OrFET gate control: 0 = inverted (low = on). |
| 2 | m_shr_clmp | (W) | Allow the microprocessor to directly control the share clamp 0 = normal share clamp operation, i.e., not clamped 1 = assert share clamp, i.e., clamped. |
| 1 | m_cbd_w | R/$\overline{W}$ | Allow the microprocessor to write directly to CBD as a possible way of adding an additional port. This might be a blinking led or a fail signal to the system. |
| 0 | m_cbd_clr | R/$\overline{W}$ | Microprocessor clear of CBD latch (if configured as latching) folowing an SMBAlert. |

**Table 29. Register 14h, Current Sense Divider Error Trim 1. Power-On Default from EEPROM Register 8114h during Power-Up.**

| Bit No. | Name | R/W | Description |
|---|---|---|---|
| 7–0 | os_div | R/$\overline{W}$ | Trim-out offset due to external resistor divider tolerances (for common-mode correction). |

**Table 30. Register 15h, Current Sense Amp Offset Trim 2. Power-On Default from EEPROM Register 8115h during Power-Up.**

| Bit No. | Name | R/W | Description |
|---|---|---|---|
| 7–0 | os_dc | R/$\overline{W}$ | Trim-out current sense amplifier offset (dc offset correction). |

**Table 31. Register 16h, Current Sense Options 1. Power-On Default from EEPROM Register 8116h during Power-Up.**

| Bit No. | Name | R/W | Description | | | | |
|---|---|---|---|---|---|---|---|
| 7–6 | isense3 | R/$\overline{W}$ | Unused. | | | | |
| 5–3 | os_div_range | R/$\overline{W}$ | External Divider Tolerance Trim Range (Common-Mode Trim Range). | | | | |
| | | | b5 | b4 | b3 | Range | External Resistor Tolerance |
| | | | 0 | 0 | 0 | −5 mV | −0.25% |
| | | | 0 | 0 | 1 | −10 mV | −0.50% |
| | | | 0 | 1 | 0 | −20 mV | −1.00% |
| | | | 1 | 0 | 0 | +5 mV | +0.25% |
| | | | 1 | 0 | 1 | +10 mV | +0.50% |
| | | | 1 | 1 | 0 | +20 mV | +1.00% |
| 2–0 | isense_range | R/$\overline{W}$ | Gain Selector | | | | |
| | | | b2 | b1 | b0 | Gain | Range |
| | | | 0 | 0 | 0 | 65x | 34.0 mV to 44.5 mV |
| | | | 0 | 0 | 1 | 85x | 26.0 mV to 34.0 mV |
| | | | 0 | 1 | 0 | 110x | 20.0 mV to 26.0 mV |
| | | | 1 | 0 | 0 | 135x | 16.0 mV to 20.0 mV |
| | | | 1 | 0 | 1 | 175x | 12.0 mV to 16.0 mV |
| | | | 1 | 1 | 0 | 230x | 9.5 mV to 12.0 mV |

**Table 32. Register 17h, Current Sense Option 2. Power-On Default from EEPROM Register 8117h during Power-Up.**

| Bit No. | Name | R/W | Description |
|---|---|---|---|
| 7 | csense_mode | R/$\overline{W}$ | 0 = $DIFF_{SENSE}$ (current sense with external resistor).<br>1 = $CT_{SENSE}$ (current transformer). |
| 6 | chopper | R/$\overline{W}$ | When chopper = 1, current sense amplifier is configured as a chopper.<br>Otherwise, current sense amplifier is continuous time. |
| 5 | ct_range | R/$\overline{W}$ | Gain — Range<br>0 = 4.5 — 0.45 V–0.68 V<br>1 = 2.57 — 0.79 V–1.20 V |
| 4 | select_gnd_offset | R/$\overline{W}$ | 0: ground offset = 100 mV; $I_{SHARE}$ error amp, offset = 50 mV.<br>1: ground offset = 0; $I_{SHARE}$ error amp offset = 0. |
| 3 | Reserved | X | Don't Care. |
| 2–0 | os_dc_range | R/$\overline{W}$ | Internal Sense Amp Offset Trim Range for Differential Current Sense |

| b2 | b1 | b0 | Range | Gain |
|---|---|---|---|---|
| 0 | 0 | 0 | −8 mV | −1 |
| 0 | 0 | 1 | −15 mV | −2 |
| 0 | 1 | 0 | −30 mV | −4 |
| 1 | 0 | 0 | +8 mV | +1 |
| 1 | 0 | 1 | +15 mV | +2 |
| 1 | 1 | 0 | +30 mV | +4 |

**Table 33. Register 18h, UV Clamp Trim. Power-On Default from EEPROM Register 8118h during Power-Up.**

| Bit No. | Name | R/W | Description |
|---|---|---|---|
| 7–0 | uv_clamp | R/$\overline{W}$ | This register contains the false UV clamp settings. |

**Table 34. Register 19h, Load Voltage Trim. Power-On Default from EEPROM Register 8119h during Power-Up.**

| Bit No. | Name | R/W | Description |
|---|---|---|---|
| 7–0 | load_v | R/$\overline{W}$ | This register contains the set load voltage trim settings. |

**Table 35. Register 1Ah, Sel CBD/SMBAlert1. Power-On Default From EEPROM Register 811Ah during Power-Up.**

| Bit No. | Name | R/W | Description |
|---|---|---|---|
| 7 | selcbd1 <7> | R/$\overline{W}$ | ovfault |
| 6 | selcbd1 <6> | R/$\overline{W}$ | uvfault |
| 5 | selcbd1 <5> | R/$\overline{W}$ | ocpto (ridethrough timed out, ocpf flag) |
| 4 | selcbd1 <4> | R/$\overline{W}$ | acsnsb (inverted) |
| 3 | selcbd1 <3> | R/$\overline{W}$ | ocpf |
| 2 | selcbd1 <2> | R/$\overline{W}$ | otp (MON5 OV) |
| 1 | selcbd1 <1> | R/$\overline{W}$ | orfetokb (inverted) |
| 0 | Selcbd1 <0> | R/$\overline{W}$ | Share_OKb (inverted) |

**Table 36. Register 1Bh, Sel CBD/SMBAlert2. Power-On Default from EEPROM Register 811Bh during Power-Up.**

| Bit No. | Name | R/W | Description |
|---|---|---|---|
| 7 | selcbd2 <7> | R/$\overline{W}$ | $V_{DD}$OK b (inverted) |
| 6 | selcbd2 <6> | R/$\overline{W}$ | mfg1 |
| 5 | selcbd2 <5> | R/$\overline{W}$ | mfg2 |
| 4 | selcbd2 <4> | R/$\overline{W}$ | mfg3 |
| 3 | selcbd2 <3> | R/$\overline{W}$ | mfg4 |
| 2 | selcbd2 <2> | R/$\overline{W}$ | m_cbd_w Microprocessor Control of CBD |
| 1 | selcbd2 <1> | R/$\overline{W}$ | mfg5 |
| 0 | selcbd2 <0> | R/$\overline{W}$ | Not used. |

**Table 37. Register 1Ch, Manufacturer's ID. Power-On Default 41h.**

| Bit No. | Name | R/W | Description |
|---|---|---|---|
| 7–0 | Manufacturer's ID Code | R | This register contains the manufacturer's ID code for the device. It is used by the manufacturer for test purposes and should not be read from or written to in normal operation. |

**Table 38. Register 1Dh, Revision Register. Power-On Default 01h.**

| Bit No. | Name | R/W | Description |
|---|---|---|---|
| 7–4 | Major Revision Code | R | These 4 bits denote the generation of the device. |
| 3–0 | Minor Revision Code | R | These 4 bits contain the manufacturer's code for minor revisions to the device. Rev 0 = 0h, Rev 1 = 1h, and so on.<br>This register is used by the manufacturer for test purposes. It should not be read from or written to in normal operation. |

**Table 39. Register 2Ah, Status1 Mirror. Power-On Default 00h.**

These flags are cleared by a register read, provided the fault no longer persists.

| Bit No. | Name | R/W | Description |
|---|---|---|---|
| 7 | ovfault_L | R | Overvoltage fault has occurred. |
| 6 | uvfault_L | R | Undervoltage fault has occurred. |
| 5 | ocpto_L | R | Overcurrent has occured and timed out (ocpf is in Status3). |
| 4 | mfg1_L | R | MON1 flag. |
| 3 | mfg2_L | R | MON2 flag. |
| 2 | mfg3_L | R | MON3 flag. |
| 1 | mfg4_L | R | MON4 flag. |
| 0 | mfg5_L | R | MON5 flag. |
| | | | Note that latched bits are clocked on a low-to-high transmission only. Also note that these register bits are cleared when read via the SMBus, except if the fault is still present. It is recommended to read the register again after the faults disappear to ensure reset. |

**Table 40. Register 2Bh, Status2 Mirror. Power-On Default 00h.**

These flags are cleared by a register read, provided the fault no longer persists.

| Bit No. | Name | R/W | Description |
|---|---|---|---|
| 7 | Share_OKb_L | R | share fault |
| 6 | orfetokb_L | R | ORFET fault |
| 5 | reverseokb_L | R | reverse fault |
| 4 | $V_{DD}$OK b_L | R | vdd fault |
| 3 | gndokb_L | R | gnd fault |
| 2 | intrefokb_L | R | intref fault |
| 1 | extrefokb_L | R | extref fault |
| 0 | vddov_L | R | vddov |
| | | | Note that latched bits are clocked on a low-to-high transmission only. Also note that these register bits are cleared when read via the SMBus, except if the fault is still present. It is recommended to read the register again after faults disappear to ensure reset. |

**Table 41. Register 2Ch, Status3 Mirror. Power-On Default 00h**

These flags are cleared by a register read, provided the fault no longer persists.

| Bit No. | Name | R/W | Description |
|---|---|---|---|
| 7 | m_acsns_rb_L | R | AC_OK fault |
| 6 | m_pson_rb_L | R | PSON fault |
| 5 | m_penok_rb_L | R | PEN fault |
| 4 | m_psonok_rb_L | R | $PS_{ON}$LINK fault |
| 3 | m_DC_OK_rb_L | R | DC_OK fault |
| 2 | ocpf | R | ocpf fault |
| 1 | PULSE_OKb_L | R | pulse fault |
| 0 | fault | R | fault latch |
| | | | Note that latched bits are clocked on a low-to-high transmission only. Also note that these register bits are cleared when read via the SMBus, except if the fault is still present. It is recommended to read the register again after the faults disappear to ensure reset. |

## MANUFACTURING DATA

**Table 42.**

| | |
|---|---|
| Register 81F0h | PROBE1_BIN |
| Register 81F1h | PROBE2_BIN |
| Register 81F2h | F T _ B I N |
| Register 81F3h | PROBE1_CHKSUM |
| Register 81F4h | PROBE2_CHKSUM |
| Register 81F5h | FT_CHKSUM |
| Register 81F6h | QUAL_PART_ID |
| Register 81F7h | Probe 1 cell current data (integer) |
| Register 81F8h | Probe 1 cell current data (two decimal places) |
| Register 81F9h | Probe 2 cell current data (integer) |
| Register 81FAh | Probe 2 cell current data (two decimal places) |
| Register 81FBh | Final test cell current data (integer) |
| Register 81FCh | Final test cell current data (two decimal places) |
| Register 81FDh | Probe X coordinate |
| Register 81FEh | Probe Y coordinate |
| Register 81FFh | Wafer number |

# MICROPROCESSOR SUPPORT

**Table 43.**

| Mnemonic | Description | Register | Bit | Read/Write |
|---|---|---|---|---|
| m_pson_r | Allows the microprocessor to read the state of PSON. This allows only one ADM1041 to be configured as the PSON interface to the host system. | 02h | 6 | Read-only |
| m_pson_w | Allow the microprocessor to write to control the PSON function of each ASIC. When in microprocessor support mode, the principle configuration for controlling power-on/power-off will be as follows: One ADM1041 would be configured to be the interface to the host system through the standard PSON pin. This pin would be configured not to write through to the PSON debounce block. The microprocessor would poll the status of this ADM1041 by reading m_pson_r. Debouncing would be done by the microprocessor. If m_pson_r changed state, the microprocessor would write the new state to m_pson_w in all ADM1041s on the SMBus. If a fault were to occur on any output, the SMBAlert interrupt would request microprocessor attention. If this means turning all ADM1041s off, this would be done by writing a zero to the m_pson_w bit. | 12h | 1 | Write-only |
| m_acsns_r | Allows the microprocessor to read the state of $AC_{SENSE}1/AC_{SENSE}2$. This allows one ADM1041 to be configured as the interface to the host power supply. | 02h | 7 | Read-only |
| m_acsns_w | Allow the microprocessor to write to control the ACSOK function of each ADM1041. When in microprocessor support mode the principle configuration for controlling AC_OK, undervoltage blanking, PEN gating, and RAMP/SS gating will be as follows: One ADM1041 will be configured to be the interface with the host power supply AC monitoring circuitry. This ADM1041 might be configured so that the acsns signal would be written through or would not be written through. Regardless, the microprocessor would monitor m_acsns_r and write to m_acsns_w as appropriate. Since it is possible to sense but not to write through, it is possible to configure a second ADM1041 to monitor a second ac or bulk voltage. | 12h | 5 | Write-only |
| m_shr_clmp | Allow the µP to write directly to m_shr_clmp to control when the ISHARE clamp is released. During a hot-swap insertion, there may be a need to delay the release of the ISHARE clamp. This allows the designer an option over the default release at 75% or 88% of the reference ramp (soft-start). | 13h | 2 | Write-only |
| m_cbd_w | Allow the microprocessor to write directly to CBD as a possible way of adding an additional output port. This might be for blinking LEDs or as a FAIL signal to the system. | 1Bh | 1 | Write-only |
| m_cbd_clr | Allows the microprocessor to clear the CBD latch following an SMBalert. If CBD is configured to be latching, there may be circumstances that lead to CBD/SMBAlert being set by, for example, one of the MON flags but does not lead to PSON being cycled and CBD being reset. In this case, the microprocessor needs to write directly to CBD to reset the latch. | 13h | 0 | Write-only |
| mfg5 | This flag indicates the status of the MON5 pin. | 00h | 0 | Read-only |
| mfg4 | This flag indicates the status of the MON4 pin. | 00h | 1 | Read-only |
| mfg3 | This flag indicates the status of the MON3 pin. | 00h | 2 | Read-only |
| mfg2 | This flag indicates the status of the MON2 pin. | 00h | 3 | Read-only |
| mfg1 | This flag indicates the status of the MON1 pin. | 00h | 4 | Read-only |
| ocpto | If this flag is high, an overcurrent has occurred and timed out. | 00h | 5 | Read-only |
| uvfault | If this flag is high, an undervoltage has been sensed | 00h | 6 | Read-only |
| ovfault | If this flag is high, an overvoltage has been sensed. | 00h | 7 | Read-only |
| vddov | If this flag is high, a $V_{DD}$ overvoltage has been sensed. | 01h | 0 | read only |
| extrefok | If this flag is low, the externally available reference on Pin 18 is overloaded. | 01h | 1 | Read-only |
| intrefok | If this flag is low, the internal reference has no integrity. | 01h | 2 | Read-only |
| gndok | If this flag is low, the ASIC ground, Pin 7, is open either pin to PCB or bond wires. | 01h | 3 | Read-only |
| $V_{DD}$OK | If this flag is low, $V_{DD}$ is below its UVL or the power mangement block has a problem, a reference voltage, ground fault, or $V_{DD}$ overvoltage fault. | 01h | 4 | Read-only |
| reverseok | If this flag is low, the OrFET has an excessive reverse voltage. | 01h | 5 | Read-only |
| orfetok | If this flag is low, either PULSE_OK, penok, loadvok, or reverseok is false. | 01h | 6 | Read-only |
| Share_OK | If this flag is low, the current share accuracy is out of limits. | 01h | 7 | Read-only |
| fault | Fault latch. If this flag is high, either an ovfault, uvfault, or ocp has occured. | 02h | 0 | Read-only |
| PULSE_OK | Pulses are present at $AC_{SENSE}$ 1. | 02h | 1 | Read-only |

| Mnemonic | Description | Register | Bit | Read/Write |
|---|---|---|---|---|
| ocpf | If this flag is high, an overcurrent has been sensed and the ocp timer has started. | 02h | 2 | Read-only |
| m_DC_OK_r | This flag indicates the status of the DC_OK pin. | 02h | 3 | Read-only |
| m_psonok_r | This flag indicates the status of the $PS_{ON}$LINK pin. | | 4 | Read-only |
| m_penok_r | This flag indicates the status of the PEN pin. | 02h | 5 | Read-only |
| m_pson_r | This flag indicates the status of the PSON pin. | 02h | 6 | Read-only |
| m_acsns_r | This flag indicates the status of the $AC_{SENSE}$1/$AC_{SENSE}$2 pin. | 02h | 7 | Read-only |
| mfg5_L | Latched status of MON5 flag. | 2Ah | 0 | Read-only |
| mfg4_L | Latched status of MON4 flag. | 2Ah | 1 | Read-only |
| mfg3_L | Latched status of MON3 flag. | 2Ah | 2 | Read-only |
| mfg2_L | Latched status of MON2 flag. | 2Ah | 3 | Read-only |
| mfgl_L | Latched status of MON1 flag. | 2Ah | 4 | Read-only |
| ocpto_L | Latched ocpto. | 2Ah | 5 | Read-only |
| uvfault_L | Latched uvfault. | 2Ah | 6 | Read-only |
| ovfault_L | Latched ovfault. | 2Ah | 7 | Read-only |
| vddov_L | Latched vddov fault. | 2Bh | 0 | Read-only |
| extrefokb_L | Latched extref fault. | 2Bh | 1 | Read-only |
| intrefokb_L | Latched intref fault. | 2Bh | 2 | Read-only |
| gndokb_L | Latched gnd fault. | 2Bh | 3 | Read-only |
| $V_{DD}$OK b_L | Latched $V_{DD}$ fault. | 2Bh | 4 | Read-only |
| reverseokb_L | Latched reverse voltage fault. | 2Bh | 5 | Read-only |
| orfetokb_L | Latched orfet fault. | 2Bh | 6 | Read-only |
| Share_OKb_L | Latched share fault. | 2Bh | 7 | Read-only |
| fault_L | Latched fault. | 2Ch | 0 | Read-only |
| PULSE_OKb_L | Latched pulse fault. | 2Ch | 1 | Read-only |
| ocpf_L | Latched ocpf fault. | 2Ch | 2 | Read-only |
| m_DC_OK_rb_L | Latched DC_OK fault. | 2Ch | 3 | Read-only |
| m_psonok_rb_L | Latched $PS_{ON}$LINKfault. | 2Ch | 4 | Read-only |
| m_penok_rb_L | Latched PEN fault. | 2Ch | 5 | Read-only |
| m_pson_rb_L | Latched PSON fault. | 2Ch | 6 | Read-only |
| m_acsns_rb_L | Latched $AC_{SENSE}$ fault. | 2Ch | 7 | Read-only |

**Notes to Microprocessor (µP) support.**

1. Possible ways to turn the ADM1041 on or off in response to a system request or a fault include:
   - Daisy chaining other ADM1041 PSON pins to the PEN pin, which is controlled by PSON on one ADM1041.
   - The microprocessor looks after the PSON—system interface and any shutdowns due to faults.
   - Connect all AC_OKLink pins together and connect all $PS_{ON}$LINK pins together. These pins must be configured appropriately.
2. Flags appended with _L are latched (Registers 2Ah/2Bh/2Ch). The latch is reset when the flag is read, except when the fault is still present. It is advisable to continue reading the flag(s) until the fault(s) have cleared.

# TRIM TABLE

This table shows all of the trims that can be set in the ADM1041.

**Table 44.**

| Description | Name | Range | Steps | Step Size | Reg | Bit No. |
|---|---|---|---|---|---|---|
| Set Load Voltage. Trim output from differential amplifier to set voltage at load. | load_v | 1.7 V–2.3 V (at input pins) | 255 | 1.74 mV–3.18 mV | 19h | 7–0 |
| Set Load OV. Trim calibrated output from remote sense amplifier to set load OV threshold. | load_ov | 105%–120% Offset input | 255 | 1.6 mV | 08h | 7–0 |
| Set False UV Clamp Threshold. Fine trim output to set voltage before OR-FET in case of load OV (at input pins). | uv_clamp | 1.3 V–2.1 V | 255 | 1.94 mV–5.07 mV | 18h | 7–0 |
| Set Local UVP Threshold. Fine trim output from local sense buffer to set UVP threshold (at input pins). | local_uvp | 1.3 V–2.1V | 255 | 1.94 mV–5.07 mV | 09h | 7–0 |
| Set Local OVP Threshold. Fine trim output from sense buffer to set OVP threshold (at input pins). | local_ovp | 1.9 V–2.85 V | 255 | 2.48 mV–5.59 mV | 0Ah | 7–0 |
| External Divider Offset Trim Range. | os_ | div_range | ±5 mV<br>±10 mV<br>±20 mV | 20 µV<br>39 µV<br>78 µV | 16h | 5-3 |
| External Divider Offset Trim. Trim out offset due to resistor divider tolerances. | os_div | | 255 | | 14h | 7–0 |
| DC Offset Trim Range. | os_dc_range | ±8 mV<br>±15 mV<br>±30 mV | | 30 µV<br>60 µV<br>120 µV | 17h | 3–0 |
| Current Sense DC Offset Trim. Trim out amplifier dc offset. | os_dc | | 255 | | 15h | 7–0 |
| Calibrate Current Sense Range. Differential sense input, six ranges configurable. | $I_{SENSE}$_range | 9.5 to 12.0 mV<br>12.0 to 16.0 mV<br>16.0 to 20.0 mV<br>20.0 to 26.0 mV<br>26.0 to 34.0 mV<br>34.0 to 44.5 mV | | | 16h | 2–0 |
| Current Transformer Gain Range. | ct_range | 0.45 to 0.68 V<br>0.79 to 1.2 V | | | 17h | 5 |
| Calibrate Current Sense. $I_{SHARE}$ = 2.0 V. | $I_{SHARE}$_slope | | 127 | 8 mV (at SHRO) | 06h | 7–1 |
| Current Share Offset. Trim offset to be added to $I_{SHARE}$ output. | $I_{SHARE}$_offset | 0 to 1.25 V (at SHRO) | 255 | 5.5 mV | 05h | 7–0 |
| Current Limit Trim. Current sense level where current limiting will start. | curr_limit | 105%–130% (SHRO 2.1 V–2.6 V) | 31 | 26 mV (at SHRO) | 04h | 7–3 |
| OTP Sense Threshold. | otp_trim (at input pins) | 2.1 V–2.5 V | 15 | 27 mV | 0Bh | 7–4 |
| Set AC Sense Threshold. | acsns_thresh | 1.10 V–1.45 V | 31 | 14 mV | 0Ch | 7–3 |
| Set AC Sense Hysteresis. | acsns_hyst | 200 mV–550 mV | 7 | 50 mV | 0Ch | 2–0 |

# APPENDIX A—CONFIGURATION TABLE

This table is included for users to program the part by function, rather than by register.

**Table 45.**

| Description | Bit No. | Name | Bit | Bit | Bit | Option | | |
|---|---|---|---|---|---|---|---|---|
| Chip address is 1010xxx. | | | | | | | | |
| Second address bit (EEPROM programmable). | 1 | add1 | | | b1 | ADD0 | xxx | Target device |
| | | | | | 0 | L | 000 | 0 |
| | | | | | 0 | H | 001 | 1 |
| | | | | | 0 | Z | 100 | 4 |
| First address bit: | | | | | | | | |
| ADD0 = L, pin to ground. | | | | | 1 | L | 010 | 2 |
| ADD0 = H, pin to $V_{DD}$. | | | | | 1 | H | 011 | 3 |
| ADD0 = Z, pin open. | | | | | 1 | Z | 101 | 5 |
| Broadcast address. | | | | | X | X | 111 | ALL |
| Config AC_OKLink and PSONLink. | 0 | i2cmb | | | b0 | Mode | | |
| | | | | | 0 | Normal SMBus, microprocessor | | |
| | | | | | 1 | SCL = AC_OK Link | | |
| | | | | | | SDA = $PS_{ON}$ Link | | |
| Configure $AC_{SENSE}$ to be hardware derived or from an SMBus command. | 6 | up_AC_OK_m | | | b6 | Mode | | |
| | | | | | 0 | Hardware $AC_{SENSE}$ | | |
| | | | | | 1 | Microprocessor support via SMBus | | |
| Configure PSON to be hardware derived or from an SMBus command. | 7 | up_pson_m | | | b7 | Mode | | |
| | | | | | 0 | Hardware PS_ON | | |
| | | | | | 1 | Micorporcessor support via SMBus | | |
| Configure UV blanking to be internally derived or from AC_OKLink. (Set opposite to i2cmb). | 4 | uvbm | | | b4 | Mode | | |
| | | | | | 0 | UVB follows AC_OKLink | | |
| | | | | | 1 | UVB follows $AC_{SENSE}$ | | |
| Build FAULT or SMBAlert signal. Allows a composite interrupt to be constructed by ORing up to 15 different signals. | 7–0 | selcbd1 | | | bn | signal | | |
| | | | | | 7 | ovfault | | |
| | | | | | 6 | uvfault | | |
| | | | | | 5 | ocpt0 (ridethough timed out) | | |
| | | | | | 4 | acsnsb | | |
| | | | | | 3 | ocpf | | |
| This uses the CBD pin. | | | | | 2 | otp (mov5) | | |
| | | | | | 1 | orfetokb | | |
| m_cbd_w is a µP writable bit. | | | | | 0 | Share_OKb | | |
| | 7–1 | selcbd2 | | | 7 | $V_{DD}$OK b | | |
| | | | | | 6 | mfgl | | |
| | | | | | 5 | mfg2 | | |
| | | | | | 4 | mfg3 | | |
| | | | | | 3 | mfg4 | | |
| | | | | | 2 | m_cbd_w | | |
| | | | | | 1 | mfg5 | | |
| | | | | | 0 | Not used | | |

| Description | Bit No. | Name | Bit | Bit | Bit | Option | |
|---|---|---|---|---|---|---|---|
| Trim registers, locking bit. | 0 | trim_lock | | | b0 | Mode | |
| | | | | | 0 | Trimming mode | |
| | | | | | 1 | All trim registers locked out | |
| Current Sense Mode. | 7 | csense_mode | | | b7 | Mode | |
| | | | | | 0 | Differential sense | |
| | | | | | 1 | CT Sense | |
| Chopper Mode. | 6 | chopper | | | b6 | Mode | |
| | | | | | 0 | Differential current sense amplifier is continuous (recomended) | |
| | | | | | 1 | Differential sense amplifier is chopper | |
| Current sense dc offset adjustment (with respect to the input). | 2–0 | os_dc_range | | | | Trim | |
| | | | b5 | b4 | b3 | | |
| | | | 0 | 0 | 0 | −8 mV | |
| | | | 0 | 0 | 1 | −15 V | |
| Compensates for the amplifier input offset voltage. | | | 0 | 1 | 0 | −30 V | |
| | | | 1 | 0 | 0 | +8 mV | |
| | | | 1 | 0 | 1 | +15 mV | |
| | | | 1 | 1 | 0 | +30 mV | |
| Current sense external divider error correction range (with respect to the input). | 5–3 | os_div_range | b5 | b4 | b3 | Trim | |
| | | | 0 | 0 | 0 | −5 mV | |
| | | | 0 | 0 | 1 | −10 mV | |
| Compensates for the mismatch error of the external resistor dividers at Pins 2 and 3. | | | 0 | 1 | 0 | −20 mV | |
| | | | 1 | 0 | 0 | +5 mV | |
| | | | 1 | 0 | 1 | +10 mV | |
| | | | 1 | 1 | 0 | +20 mV | |
| Set differential current sense gain. | 2–0 | diff_gain | b2 | b1 | b0 | Gain | Range |
| | | | 0 | 0 | 0 | 65 | 34.0 mV–44.5 mV |
| | | | 0 | 0 | 1 | 85 | 26.0 mV–34.0 mV |
| | | | 0 | 1 | 0 | 110 | 20.0 mV–26 mV |
| | | | 1 | 0 | 0 | 135 | 16.0 mV–20.0 mV |
| | | | 1 | 0 | 1 | 175 | 12.0 mV–16.0 mV |
| | | | 1 | 1 | 0 | 230 | 9.8 mV–12.0 mV |
| Set current transformer input gain. | 5 | ct_range | | | b5 | Gain | Range |
| | | | | | 0 | 4.5 | 0.45 V–0.68 V |
| | | | | | 1 | 2.57 | 0.79 V–1.20 V |
| OCP mode. Disables OCP shutdown. | 7 | curr_lim_dis | | | b7 | Mode | |
| | | | | | 0 | OCP timer starts when $C_{CMP}$ > 0.5 V | |
| | | | | | 1 | No OCP shutdown | |
| OCP Ride Through. Sets the OCP timer duration before OCP shutdown occurs. | 4–3 | ocpts1 Reg12h | | b4 | b3 | Period | |
| | | ocpts0 Reg12h | | 0 | 0 | 1 s | |
| | | | | 0 | 1 | 2 s | |
| | | | | 1 | 0 | 3 s | |
| | | | | 1 | 1 | 4 s | |
| | 2 | ocpts2 | | X | X | 100 ms | |

| Description | Bit No. | Name | Bit | Bit | Bit | Option | | | |
|---|---|---|---|---|---|---|---|---|---|
| Option: Pulse/$AC_{SENSE}$1/MON1. | 3–1 | mn1s2 | b3 | b2 | b1 | | flag | ov | uv |
| | | mn1s1 | 0 | 0 | 0 | iopin = $AC_{SENSE}$1 | | | |
| | | mnls0 | 0 | 0 | 1 | iopin = $AC_{SENSE}$1 | | | |
| | | | 0 | 1 | 0 | +ve ov iopin < 1.15 V | 0 | 0 | 0 |
| | | | | | | +ve ov iopin > 1.25 V | 1 | 1 | 0 |
| | | | 0 | 1 | 1 | +ve uv iopin < 1.25 V | 0 | 0 | 1 |
| | | | | | | +ve uv iopin > 1.35 V | | | |
| | | | 1 | 0 | 0 | −ve ov iopin < 1.25 V | 0 | 1 | 0 |
| | | | | | | −ve ov iopin > 1.35 V | 1 | 0 | 0 |
| | | | 1 | 0 | 1 | −ve uv iopin < 1.15 V | 0 | 0 | 0 |
| | | | | | | −ve uv iopin > 1.25 V | 1 | 0 | 1 |
| | | | 1 | 1 | 0 | flag iopin < 1.15 V | 0 | 0 | 0 |
| | | | | | | flag iopin > 1.25 V | 1 | 0 | 0 |
| | | | 1 | 1 | 1 | flag iopin < 1.15 V | 1 | 0 | 0 |
| | | | | | | flag iopin > 1.25 V | | | |
| Option: $AC_{SENSE}$2/MON | | | | | | | | | |
| | 7–5 | mn2s2 | b7 | b6 | b5 | | flag | ov | uv |
| | | mn2s1 | 0 | 0 | 0 | iopin = $AC_{SENSE}$2 | | | |
| | | mn2s0 | 0 | 0 | 1 | iopin = $AC_{SENSE}$2 | | | |
| | | | 0 | 1 | 0 | +ve ov iopin < 1.15 V | 0 | 0 | 0 |
| | | | | | | +ve ov iopin > 1.25 V | 1 | 1 | 0 |
| | | | 0 | 1 | 1 | +ve uv iopin < 1.25 V | 0 | 0 | 1 |
| | | | | | | +ve uv iopin > 1.35 V | 1 | 0 | 0 |
| | | | 1 | 0 | 0 | −ve ov iopin < 1.25 V | 0 | 1 | 0 |
| | | | | | | −ve ov iopin > 1.35 V | 1 | 0 | 0 |
| | | | 1 | 0 | 1 | −ve uv iopin < 1.15 V | 0 | 0 | 0 |
| | | | | | | −ve uv iopin > 1.25 V | 1 | 0 | 1 |
| | | | 1 | 1 | 0 | flag iopin < 1.15 V | 0 | 0 | 0 |
| | | | | | | flag iopin > 1.25V | 1 | 0 | 0 |
| | | | 1 | 1 | 1 | flag iopin < 1.15V | 1 | 0 | 0 |
| | | | | | | flag iopin > 1.25 V | 0 | 0 | 0 |
| Option: PSON/MON3 | 4–2 | mn3s2 | b4 | b3 | b2 | | flag | ov | uv |
| | | mn3s1 | 0 | 0 | 0 | iopin = PSON on = low | | | |
| | | mn3s0 | 0 | 0 | 1 | iopin = PSON on = high | | | |
| | | | 0 | 1 | 0 | +ve ov iopin < 1.15 V | 0 | 0 | 0 |
| | | | | | | +ve ov iopin > 1.25 V | 1 | 1 | 0 |
| | | | 0 | 1 | 1 | +ve uv iopin < 1.25 V | 0 | 0 | 1 |
| | | | | | | +ve uv iopin > 1.35 V | 1 | 0 | 0 |
| | | | 1 | 0 | 0 | −ve ov iopin < 1.25 V | 0 | 1 | 0 |
| | | | | | | −ve ov iopin > 1.35 V | 1 | 0 | 0 |
| | | | 1 | 0 | 1 | −ve uv iopin < 1.15 V | 0 | 0 | 0 |
| | | | | | | –ve uv iopin > 1.25 V | 1 | 0 | 1 |
| | | | 1 | 1 | 0 | flag iopin < 1.15 V | 0 | 0 | 0 |
| | | | | | | flag iopin > 1.25 V | 1 | 0 | 0 |
| | | | 1 | 1 | 1 | flag iopin < 1.15 V | 1 | 0 | 0 |
| | | | | | | flag iopin > 1.25 V | 0 | 0 | 0 |
| Option: DC_OK/MON4 | | | | | | | | | |
| | 7–5 | mn4s2 | b7 | b6 | b5 | | flag | ov | uv |
| | | mn4s1 | 0 | 0 | 0 | iopin = DC_OK | | | |
| | | mn4s0 | 0 | 0 | 1 | iopin = DC_OK | | | |

| Description | Bit No. | Name | Bit | Bit | Bit | Option | | | |
|---|---|---|---|---|---|---|---|---|---|
| To set DC_OK polarity, see polDC_OK. | | | 0 | 1 | 0 | +ve ov iopin < 1.15 V | 0 | 0 | 0 |
| | | | | | | +ve ov iopin > 1.25 V | 1 | 1 | 0 |
| | | | 0 | 1 | 1 | +ve uv iopin < 1.25 V | 0 | 0 | 1 |
| | | | | | | +ve uv iopin > 1.35 V | 1 | 0 | 0 |
| | | | 1 | 0 | 0 | −ve ov iopin < 1.25 V | 0 | 1 | 0 |
| | | | | | | −ve ov iopin > 1.35 V | 1 | 0 | 0 |
| | | | 1 | 0 | 1 | −ve uv iopin < 1.15 V | 0 | 0 | 0 |
| | | | | | | −ve uv iopin > 1.25 V | 1 | 0 | 1 |
| | | | 1 | 1 | 0 | flag iopin < 1.15 V | 0 | 0 | 0 |
| | | | | | | flag iopin > 1.25 V | 1 | 0 | 0 |
| | | | 1 | 1 | 1 | flag iopin < 1.15 V | 1 | 0 | 0 |
| | | | | | | flag iopin > 1.25 V | 0 | 0 | 0 |
| Option: $V_{REF}$/AC_OK/MON5. | 4–2 | mn5s2 | b4 | b3 | b2 | | flag | ov | uv |
| | | mn5s1 | 0 | 0 | 0 | iopin = AC_OK | | | |
| | | mn5s0 | 0 | 0 | 1 | iopin = AC_OK | | | |
| | | | 0 | 1 | 0 | iopin = AC_OK | | | |
| To set AC_OK polarity, see polDC_OK. | | | | | | | | | 0 |
| | | | 0 | 1 | 0 | +ve ov iopin < vdac | 0 | 0 | |
| | | | | | | +ve ov iopin > vdac | 1 | 1 | 0 |
| | | | 0 | 1 | 1 | +ve uv iopin < vdac | 0 | 0 | 1 |
| | | | | | | +ve uv iopin > vdac | 1 | 0 | 0 |
| | | | 1 | 0 | 0 | −ve ov iopin < vdac | 0 | 1 | 0 |
| | | | | | | −ve ov iopin > vdac | | | |
| | | | 1 | 0 | 1 | −ve uv iopin < vdac | 0 | 0 | 0 |
| | | | | | | −ve uv iopin > vdac | | | |
| | | | 1 | 1 | 0 | flag iopin < vdac | 0 | 0 | 0 |
| | | | | | | flag iopin > vdac | 1 | 0 | 0 |
| | | | 1 | 1 | 1 | 2.5 V ref out | | | |
| AC sense source. | 2 | acss | | | b2 | Source | | | |
| | | | | | 0 | AC_OK from $AC_{SENSE}1$ | | | |
| | | | | | 1 | AC_OK from $AC_{SENSE}2$ | | | |
| PSON delay/debounce time. | 1–0 | psonts1 | | b1 | b2 | Period | | | |
| | | psonts0 | | 0 | 0 | 80 ms | | | |
| | | | | 0 | 1 | 0 ms | | | |
| | | | | 1 | 0 | 40 ms | | | |
| | | | | 1 | 1 | 160 ms | | | |
| DC_OK on delay. | 1–0 | pokts1 | | b1 | b0 | Period | | | |
| Delay time from dc outputs being enabled to DC_OK being asserted. | | pokts0 | | 0 | 0 | 400 ms | | | |
| | | | | 0 | 1 | 200 ms | | | |
| | | | | 1 | 0 | 800 ms | | | |
| | | | | 1 | 1 | 1600 ms | | | |
| DC_OK off delay. | 7–6 | pots1 | | b7 | b6 | period | | | |
| Delay time from PSON forcingDC_OK to be deasserted to PEN being deasserted. | | pots0 | | 0 | 0 | 2 ms | | | |
| | | | | 0 | 1 | 0 ms | | | |
| | | | | 1 | 0 | 1 ms | | | |
| | | | | 1 | 1 | 4 ms | | | |

| Description | Bit No. | Name | Bit | Bit | Bit | Option | |
|---|---|---|---|---|---|---|---|
| Current share capture range. | 5–4 | $I_{SHARE}$_capture | b5 | | b4 | Range | |
| Maximum output voltage control range due to the current share action. | | | | 0 | 0 | 1% | |
| | | | | 0 | 1 | 2% | |
| | | | | 1 | 0 | 3% | |
| | | | | 1 | 1 | 4% | |
| Soft-start mode provides option for soft-startramp to be gated by acsnsok | 2 | gateramp | | | b2 | Mode | |
| | | | | | 0 | Soft-start gated by pen only | |
| | | | | | 1 | Soft-start gated by acsnsok and pen | |
| Soft-start step rise time (output rise time) | 3–2 | ssrsl | | b3 | b2 | Rise time | |
| | | ssrs0 | | 0 | 0 | 300 µs | |
| | | | | 0 | 1 | 10 ms | |
| | | | | 1 | 0 | 20 ms | |
| | | | | 1 | 1 | 40 ms | |
| PEN start-up mode | 3 | gatepen | | | b3 | Mode | |
| Provides option for PEN to be gated by acsnsok. | | | | | 0 | PEN not gated | |
| | | | | | 1 | PEN gated by acsnsok | |
| Load overvoltage debounce | 1–0 | loadov_recover | | b1 | b0 | Period | |
| | | | | 0 | 0 | 100 µs | |
| | | | | 0 | 1 | 200 µs | |
| | | | | 1 | 0 | 300 µs | |
| | | | | 1 | 1 | 400 µs | |
| OrFET Reverse Voltage Threshold. | 7–6 | rev_volt_off | | b7 | b6 | Threshold | |
| | | | | 0 | 0 | 100 mV | |
| Reverse voltage at which the ORFET turns off. | | | | 0 | 1 | 150 mV | |
| | | | | 1 | 0 | 200 mV | |
| | | | | 1 | 1 | 250 mV | |
| OrFET Forward Voltage Threshold | 5–4 | rev_volt_on | | b5 | b4 | Threshold | |
| | | | | 0 | 0 | 20 mV | |
| Reverse voltage at which the OrFET turns on | | | | 0 | 1 | 30 mV | |
| | | | | 1 | 0 | 40 mV | |
| | | | | 1 | 1 | 50 mV | |
| Share_OK Window Threshold | 1–0 | Share_OK_thresh | | b1 | b0 | Threshold voltage | |
| | | | | 0 | 0 | ±5% | ±100 mV |
| | | | | 0 | 1 | ±10% | ±200 mV |
| | | | | 1 | 0 | ±15% | ±300 mV |
| | | | | 1 | 1 | ±20% | ±400 mV |
| Restart Mode | 7 | rsm | | | b7 | Mode | |
| Provides an option to auto-restart after approximately 1 sec. | | | | | 0 | OV, UV, OC faults latch | |
| | | | | | 1 | Auto-restarts after OCP or undervoltage | |
| This applies only to UVP and OCP faults not to OVP faults. | | | | | | | |
| Set PEN Output Polarity. | 6 | polpen0 | | b7 | b6 | | |
| Also selects open-drain N-channel or P-channel. | 7 | polpen1 | | | | | |
| | | | | | | FET option | Polarity |
| | | | | 0 | 0 | N | – |
| | | | | 0 | 1 | P | + |
| | | | | 1 | 0 | P | – |
| | | | | 1 | 1 | N | + |

| Description | Bit No. | Name | Bit | Bit | Bit | Option | |
|---|---|---|---|---|---|---|---|
| Set CBD Output Polarity | 5 | polcbd0 | | b6 | b5 | FET option | Polarity |
| | 6 | polcbd1 | | 0 | 0 | N | – |
| | | | | 0 | 1 | P | + |
| | | | | 1 | 0 | P | – |
| | | | | 1 | 1 | N | + |
| Set OrFET Gate Drive Polarity | 3 | polfg | | | b3 | Polarity | |
| This is an open-drain N-FET | | | | | 0 | True = low (N-FET on) | |
| | | | | | 1 | True = high (N-FET off) | |
| Set DC_OK Output Polarity. | 5 | mn4s0 | | b5 | b5 | FET option | Polarity |
| Also selects open-drain N-channel or P-channel. | 5 | polDC_OK | | 0 | 0 | N | + |
| | | | | 0 | 1 | P | – |
| | | | | 1 | 0 | P | – |
| | | | | 1 | 1 | N | + |
| Set $I_{SHARE}$ Clamp Release threshold. Percent of nominal output voltage. | 0 | $I_{SHARE}$_clamp | | | b0 | Soft-start threshold % | |
| | | | | | 0 | 75 | |
| | | | | | 1 | 88 | |
| Configure Soft OTP Option | 0 | softotp | | | b0 | Mode | |
| | | | | | 0 | MON5 OV causes shutdown. | |
| | | | | | 1 | MON5 OV turns off and then restarts when temperature falls. | |
| Select CBD Latch Mode | 0 | cbdlm | | | b0 | Mode | |
| | | | | | 0 | cbdlm = nonlatching | |
| | | | | | 1 | cbdlm = latching | |
| Set AC_OK Output Polarity | 2 | mn5s0 | | b4 | b2 | | |
| Also selects open-drain N-channel or P-channel | 4 | polAC_OK | | | | | |
| | | | | | | FET Option | Polarity |
| | | | | 0 | 0 | N | + |
| | | | | 0 | 1 | P | – |
| | | | | 1 | 0 | P | – |
| | | | | 1 | 1 | N | + |
| Lock EEPROM Contents | 7–0 | eeprom_locks | | | bn | Locks EEPROM range: | |
| | | lock7 | | | 7 | | |
| | | lock6 | | | 6 | 8140h–817Fh | |
| | | lock5 | | | 5 | 8120h–813Fh | |
| | | lock4 | | | 4 | 8100h–811Fh | |
| | | lock3 | | | 3 | 80C0h–80FFh | |
| | | lock2 | | | 2 | 8080h–80BFh | |
| | | lock1 | | | 1 | 8040h–807Fh | |
| | | lock0 | | | 0 | 8000h–803Fh | |
| Eliminate offset correction. | 4 | selects_gnd_offset | | b4 | | gnd_offset | ISHARE_amp_offset |
| Shorts 2 × 50 mV sources in current share circuit. | | | | 0 | | 100 mV | 50 mV |
| | | | | 1 | | 0 mV | 0 mV |
| Disable groundOK monitor. | 1 | gndok_dis | | | b1 | | |
| An open circuit GND pin does not affect $V_{DD}$OK. | | | | | 0 | GND monitoring enabled. | |
| | | | | | 1 | GND monitoring disabled, that is, always OK. | |

# APPENDIX B—TEST NAME TABLE

This table is included for ADI's internal reference use This is a cross reference for the ADI test program.

**Table 46.**

| Specification | Test Name |
|---|---|
| Supplies | |
| $V_{DD}$ | $V_{DD}$ |
| $I_{DD}$, Current Consumption | $I_{DD}$ |
| Peak $I_{DD}$, during EEPROM Erase Cycle | |
| UNDERVOLTAGE LOCKOUT, $V_{DD}$ | |
| Start-Up Threshold | $V_{DD\ (ON)}$ |
| Stop Threshold | $V_{DD\ (OFF)}$ |
| Hysteresis | $V_{DDHYS}$ |
| 2.5 V Ref Out | $V_{REF}$ |
| Output Voltage | $V_{REF}$ |
| Line Regulation | $V_{LINE}$ |
| Load Regulation | $V_{LOAD}$ |
| Temperature Stability | $TC_{REF}$ |
| Long-Term Stability | $V_{REF_STAB}$ |
| Current Limit | $I_{MAX}$ |
| Output Resistance | $R_O$ |
| Load Capacitance | $C_L$ |
| Ripple Due to Autozero | $V_{REF_RIPPLE}$ |
| POWER BLOCK PROTECTION | |
| $V_{DD}$ Overvoltage | $V_{OVP}$ |
| $V_{DD}$ Overvoltage Debounce | $T_{DFILTER}$ |
| $V_{REF}$ Overvoltage | $V_{RMOVP}$ |
| $V_{REFOUT}$ Undervoltage | $V_{ROUVP}$ |
| Open Ground | $V_{GND}$ |
| Debounce | $T_{DEBOUNCE}$ |
| POWER-ON RESET | |
| DC Level | $V_{POR}$ |
| DIFFERENTIAL LOAD VOLTAGE SENSE INPUT, ($V_S$–, $V_S$+) | |
| $V_S$– Input Voltage | $V_{DVCM}$ |
| $V_S$+ Input Voltage | $V_{DVIN_MAX}$ |
| $V_S$– Input Resistance | $V_{DVINRN}$ |
| $V_S$+ Input Resistance | $V_{DVINRP}$ |
| $V_{NOM}$ Adjustment Range | $V_{DVADJ}$ |
| Set Load Voltage Trim Step | $V_{DVTRIM}$ |
| Minimum Set Load Overvoltage Trim Range | $V_{DVLOV}$ |
| Set Load Overvoltage Trim Step | $V_{LOVTRIM}$ |
| Recover from Load OV False to $F_G$ True | $T_{LOADOV_FALSE}$ |
| Operate Time from Load OV to $F_G$ False | $T_{LOADOV_TRUE}$ |
| LOCAL VOLTAGE SENSE, $V_{LS}$, AND FALSE UV CLAMP | |
| Input Voltage Range | $V_{LS_RANGE}$ |
| Stage Gain | $A_{CLAMP}$ |
| False UV Clamp, $V_{LS}$ Input Voltage Nominal, and Trim Range | $V_{CLMPTRIM}$ |
| Clamp Trim Step | $V_{CLMPSTEP}$ |

| Specification | Test Name |
|---|---|
| Local Overvoltage | $V_{LSOV}$ |
| Nominal and Trim Range | |
| OV Trim Step, | $V_{LSOVSTEP}$ |
| OV Trim Step, | $V_{LSOVSTEP}$ |
| Noise Filter, for OVP Function Only | $T_{NFOVP}$ |
| Local Undervoltage | $V_{LSUV}$ |
| Nominal and Trim Range | |
| UV Trim Step | $V_{LSUVSTEP}$ |
| UV Trim Step | $V_{LSUVSTEP}$ |
| Noise Filter, for UVP Function Only | $T_{NFUVP}$ |
| VOLTAGE ERROR AMPLIFIER | $V_{CMP}$ |
| Reference Voltage | $V_{REF_VCMP}$ |
| Temperature Coefficient | $TC_V$ |
| Long-Term Voltage Stability | $V_{STAB}$ |
| Soft-start Period Range | $T_{SSRANGE}$ |
| Set Soft-start Period | $T_{SS}$ |
| Unity Gain Bandwidth | GBW |
| Transconductance | $G_{mVCMP}$ |
| Source Current | $I_{SOURCE_VCMP}$ |
| Sink Current | $I_{SINK_VCMP}$ |
| DIFFERENTIAL CURRENT SENSE INPUT, $C_S$– $C_S$+ | |
| Common-Mode Range, | $V_{CM_RANGE}$ |
| External Divider Tolerance Trim Range (with respect to input) | $V_{OS_DIV_RANGE}$ |
| External Divider Tolerance Trim Step Size (with respect to input) | $V_{OS_DIV_STEP}$ |
| DC Offset Trim Range (os_dc_range) (with respect to input) | $V_{OS_DC_RANGE}$ |
| DC Offset Trim Step Size (with respect to input) | $V_{OS_DC_STEP}$ |
| Total Offset Temperature Drift | $T_{DRIFT}$ |
| Gain Range (Isense_range) | Isense_range |
| Gain Setting 1 (16h, B2–0 = 000) | $G_{65X}$ |
| Gain Setting 2 (16h, B2–0 = 001) | $G_{85X}$ |
| Gain Setting 3 (16h, B2–0 = 010) | $G_{110X}$ |
| Gain Setting 4 (16h, B2–0 = 100) | $G_{135X}$ |
| Gain Setting 5 (16h, B2–0 = 101) | $G_{175X}$ |
| Gain Setting 6 (16h, B2–0 = 110) | $G_{230X}$ |
| CURRENT SENSE CALIBRATION | |
| Full Scale (No Offset), Attenuation Range | $V_{SHR}$ |
| Current Share Trim Step (At SHRO), | $V_{SHRSTEP}$ |
| Current Sense Accuracy, (40 mV) | |
| Cal. Accuracy, 20 mV at $C_S$+, $C_S$– | $Tol_{CSHR}$ |
| Cal. Accuracy, 40 mV at $C_S$+, $C_S$– | $Tol_{CSHR}$ |
| Cal. Accuracy, 40 mV at $C_S$+, $C_S$– | $Tol_{CSHR}$ |

| Specification | Test Name |
|---|---|
| SHARE BUS OFFSET | |
| Current Share Offset Range | $V_{ZO}$ |
| Zero Current Offset Trim Step | $V_{ZOSTEP}$ |
| CURRENT TRANSFORMER SENSE INPUT | $I_{CT}$ |
| Gain Setting 0 | $G_{CT_X4}$ |
| Gain Setting 1 | $G_{CT_X2}$ |
| CT Input Sensitivity (Gain Set 0) | $V_{CT_X4}$ |
| CT Input Sensitivity (Gain Set 1) | $V_{CT_X2}$ |
| Input Impedance | $R_{IN_CT}$ |
| Source Current | $I_{SOURCE_CT}$ |
| Source Current Step Size | $I_{STEP_CT}$ |
| Reverse Current for Extended SMBus Addressing | $I_{REV}$ |
| CURRENT LIMIT ERROR AMPLIFIER | |
| Current Limit Trim Range | $C_{LIM}$ |
| Current Limit Trim Step | $C_{LIMSTEP}$ |
| Current Limit Trim Step | $C_{LIMSTEP}$ |
| Transconductance | $G_{mCCMP}$ |
| Output Source Current | $I_{SOURCE_CCMP}$ |
| Output Sink Current | $I_{SINK_CCMP}$ |
| CURRENT SHARE DRIVER | |
| Output Voltage | $V_{SHRO_1K}$ |
| Short-Circuit Source Current | $I_{SHRO_SHORT}$ |
| Source Current | $I_{SHRO_SOURCE}$ |
| Sink Current | $I_{SHRO_SINK}$ |
| CURRENT SHARE DIFFERENTIAL SENSE AMPLIFIER | |
| $V_S$– Input Voltage | |
| $V_{SHRS}$ Input Voltage | |
| Input Impedance | $R_{IN_SHR_DIFF}$ |
| Gain | $G_{SHR_DIFF}$ |
| CURRENT SHARE ERROR AMPLIFIER | |
| Transconductance, SHRS to SCM | $G_{mSCMP}$ |
| Output Source Current | $I_{SOURCE_SCMP}$ |
| Output Sink Current | $I_{SINK_SCMP}$ |
| Input Offset Voltage | $V_{IN_SHR_OFF}$ |
| Share OK Window Comparator Threshold (Share Drive Error) | $V_{SHR_THRES}$ |
| CURRENT LIMIT | |
| Current Limit Control Lower Threshold | $V_{CLIM_THRES_MIN}$ |
| Current Limit Control Upper Threshold | $V_{CLIM_THRES_MAX}$ |
| CURRENT SHARE CAPTURE | |
| Current Share Capture Range | $SHR_{CAPT_RANGE}$ |
| Capture Threshold | $V_{SHR_CAPT_THRES}$ |
| FET OR GATE DRIVE | |
| Output Low Level (On) | $V_{LO_FET}$ |
| Output Leakage Current | $I_{OL_FET}$ |
| Polarity Select, Vgateon | |

| Specification | Test Name |
|---|---|
| REVERSE VOLTAGE COMPARATOR, FS, FD | |
| Common-Mode Range | |
| Input Impedance | $R_{FS}$, $R_{FD}$ |
| Reverse Voltage Detector Turn-Off Threshold | $V_{RVD_THRES_OFF}$ |
| Reverse Voltage Detector Turn-On Threshold | $V_{RVD_THRES_ON}$ |
| $AC_{SENSE}1/AC_{SENSE}2$ COMPARATOR (AC or Bulk Sense) | |
| Threshold Voltage | $V_{SNSADJ_THRES}$ |
| Threshold Adjust Range | $V_{SNSADJ_RANGE}$ |
| Threshold Trim Step | $V_{SNSADJ_STEP}$ |
| Hysteresis Voltage | $V_{SNSHST}$ |
| Hysteresis Adjust Range | $V_{SNSHYS_RANGE}$ |
| Hysteresis Trim Step | $V_{SNSHYS_STEP}$ |
| Noise Filter | $T_{NFSNS}$ |
| PULSE-IN | |
| Threshold Voltage | $V_{PULSEMIN}$ |
| Pulseok on delay | $T_{PULSEON}$ |
| Pulseok off delay | $T_{PULSEOFF}$ |
| OSCILLATOR AND TIMING | |
| General Tolerance on Time Delays | |
| OCP | |
| OCP Threshold Voltage | $V_{OCP_THRES}$ |
| OCP Shutdown Delay Time (Continuous Period in Current Limit) | $T_{OCP_SLOW}$ |
| OCP Fast Shutdown Delay Time | $T_{OCP_FAST}$ |
| MON1, MON2, MON3, MON4 | |
| Sense Voltage | $V_{MON1}$ |
| Hysteresis | $V_{MON1_HST}$ |
| OVP Noise Filter | $T_{NFOVP_MON1}$ |
| UVP Noise Filter | $T_{NFUVP_MON1}$ |
| OTP (MON5) | |
| Sense Voltage Range | $V_{OTP_RANGE}$ |
| OTP Trim Step | $V_{OTP_STEP}$ |
| Hysteresis | $I_{OTP_HST}$ |
| OVP Noise Filter | $T_{NFOVP_OTP}$ |
| UVP Noise Filter | $T_{NFUVP_OTP}$ |
| PSON | |
| Input Low Level | $V_{IL_PSON}$ |
| Input High Level | $V_{IH_PSON}$ |
| Debounce | $T_{NF_PSON}$ |
| PEN, DC_OK, CBD, AC_OK | |
| Open-Drain N-Channel Option | |
| Output Low Level = On | $V_{OL_PEN}$ |
| Open-Drain P-Channel | |
| Output High Level = On | $V_{OH_PEN}$ |
| Leakage Current | $I_{OH_PEN}$ |

| Specification | Test Name |
|---|---|
| DC_OK | |
| DC_OK, On Delay (Power-On and OK Delay) | $T_{DCOK_ON}$ |
| DC_OK, Off Delay (Power-Off Early Warning) | $T_{DCOK_OFF}$ |
| SMBus, SDL/SCL | |
| Input Voltage Low | $V_{IL}$ |
| Input Voltage High | $V_{IH}$ |
| Output Voltage Low | $V_{OL}$ |
| Pull-Up Current | $I_{PULLUP}$ |
| Leakage Current | $I_{LEAK}$ |
| ADD0, HARDWIRED ADDRESS BIT | |
| ADD0 Low Level | |
| ADD0 Floating | |
| ADD0 High | |

| Specification | Test Name |
|---|---|
| SERIAL BUS TIMING | |
| Clock Frequency | $f_{SCLK}$ |
| Glitch Immunity | $t_{SW}$ |
| Bus Free Time | $t_{BUF}$ |
| Start Setup Time | $t_{SU;STA}$ |
| Start Hold Time | $t_{HD;STA}$ |
| SCL Low Time | $t_{LOW}$ |
| SCL High Time | $t_{HIGH}$ |
| SCL, SDA Rise Time | $t_r$ |
| SCL, SDA Fall Time | $t_f$ |
| Data Setup Time | $t_{SU;DAT}$ |
| Data Hold Time | $t_{HD;DAT}$ |
| EEPROM RELIABILITY | |
| Endurance | |
| Data Retention | |

# OUTLINE DIMENSIONS

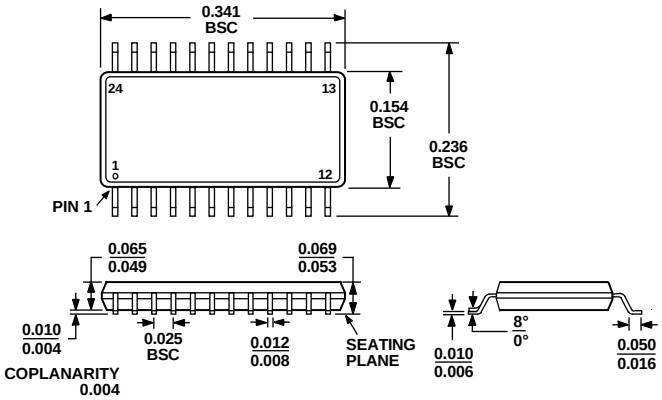


COMPLIANT TO JEDEC STANDARDS MO-137AE

*Figure 39. 24-Lead QSOP (RQ-24)*
*Dimensions shown in millimeters*

## ORDERING GUIDE

| Model | Temperature Range | Package Description | Package Option |
|---|---|---|---|
| ADM1041ARQ | −40°C to +85°C | 24-Lead QSOP | RQ-24 |
| ADM1041ARQ-REEL | −40°C to +85°C | 24-Lead QSOP | RQ-24 |
| ADM1041ARQ-REEL7 | −40°C to +85°C | 24-Lead QSOP | RQ-24 |

Purchase of licensed I²C components of Analog Devices or one of its sublicensed Associated Companies conveys a license for the purchaser under the Philips I²C Patent Rights to use these components in an I²C system, provided that the system conforms to the I²C Standard Specification as defined by Philips.

© 2004 Analog Devices, Inc. All rights reserved. Trademarks and registered trademarks are the property of their respective owners.
D04521-0-5/04(A)

ANALOG DEVICES

www.analog.com

# OCEAN CHIPS
## Океан Электроники
### Поставка электронных компонентов

Компания «Океан Электроники» предлагает заключение долгосрочных отношений при поставках импортных электронных компонентов на взаимовыгодных условиях!

Наши преимущества:

- Поставка оригинальных импортных электронных компонентов напрямую с производств Америки, Европы и Азии, а так же с крупнейших складов мира;
- Широкая линейка поставок активных и пассивных импортных электронных компонентов (более 30 млн. наименований);
- Поставка сложных, дефицитных, либо снятых с производства позиций;
- Оперативные сроки поставки под заказ (от 5 рабочих дней);
- Экспресс доставка в любую точку России;
- Помощь Конструкторского Отдела и консультации квалифицированных инженеров;
- Техническая поддержка проекта, помощь в подборе аналогов, поставка прототипов;
- Поставка электронных компонентов под контролем ВП;
- Система менеджмента качества сертифицирована по Международному стандарту ISO 9001;
- При необходимости вся продукция военного и аэрокосмического назначения проходит испытания и сертификацию в лаборатории (по согласованию с заказчиком);
- Поставка специализированных компонентов военного и аэрокосмического уровня качества (Xilinx, Altera, Analog Devices, Intersil, Interpoint, Microsemi, Actel, Aeroflex, Peregrine, VPT, Syfer, Eurofarad, Texas Instruments, MS Kennedy, Miteq, Cobham, E2V, MA-COM, Hittite, Mini-Circuits, General Dynamics и др.);

Компания «Океан Электроники» является официальным дистрибьютором и эксклюзивным представителем в России одного из крупнейших производителей разъемов военного и аэрокосмического назначения **«JONHON»**, а так же официальным дистрибьютором и эксклюзивным представителем в России производителя высокотехнологичных и надежных решений для передачи СВЧ сигналов **«FORSTAR»**.

AVIC JONHON

**«JONHON»** (основан в 1970 г.)

Разъемы специального, военного и аэрокосмического назначения:

(Применяются в военной, авиационной, аэрокосмической, морской, железнодорожной, горно- и нефтедобывающей отраслях промышленности)

**«FORSTAR»** (основан в 1998 г.)

ВЧ соединители, коаксиальные кабели, кабельные сборки и микроволновые компоненты:

(Применяются в телекоммуникациях гражданского и специального назначения, в средствах связи, РЛС, а так же военной, авиационной и аэрокосмической отраслях промышленности).

FORSTAR®

Телефон: 8 (812) 309-75-97 (многоканальный)
Факс: 8 (812) 320-03-32
Электронная почта: ocean@oceanchips.ru
Web: http://oceanchips.ru/
Адрес: 198099, г. Санкт-Петербург, ул. Калинина, д. 2, корп. 4, лит. А