3.3 VOLT TIME SLOT INTERCHANGE DIGITAL SWITCH 512 x 512

IDT72V70200

FEATURES:

- **512 x 512 channel non-blocking switching at 2.048 Mb/s**
- **Per-channel variable or constant throughput delay**
- **Automatic identification of ST-BUS®/GCI interfaces**
- **Accept 16 serial data streams of 2.048 Mb/s**
- **Automatic frame offset delay measurement**
- **Per-stream frame delay offset programming**
- **Per-channel high impedance output control**
- **Per-channel Processor Mode**
- **Control interface compatible to Intel/Motorola CPUs**
- **Connection memory block programming**
- **IEEE-1149.1 (JTAG) Test Port**
- **Available in** 100-pin Thin Quad Flatpack (TQFP)
- **3.3V Power Supply**
- **Operating Temperature Range -40°C to +85°C**

DESCRIPTION:

The IDT72V70200 is a non-blocking digital switch that has a capacity of 512 x 512 channels at 2.048 Mb/s. Some of the main features are: programmable stream and channel control, Processor Mode, input offset delay and high-impedance output control.

Per-stream input delay control is provided for managing large multi-chip switches that transport both voice channel and concatenated data channels. In addition, input streams can be individually calibrated for input frame offset.

FUNCTIONAL BLOCK DIAGRAM

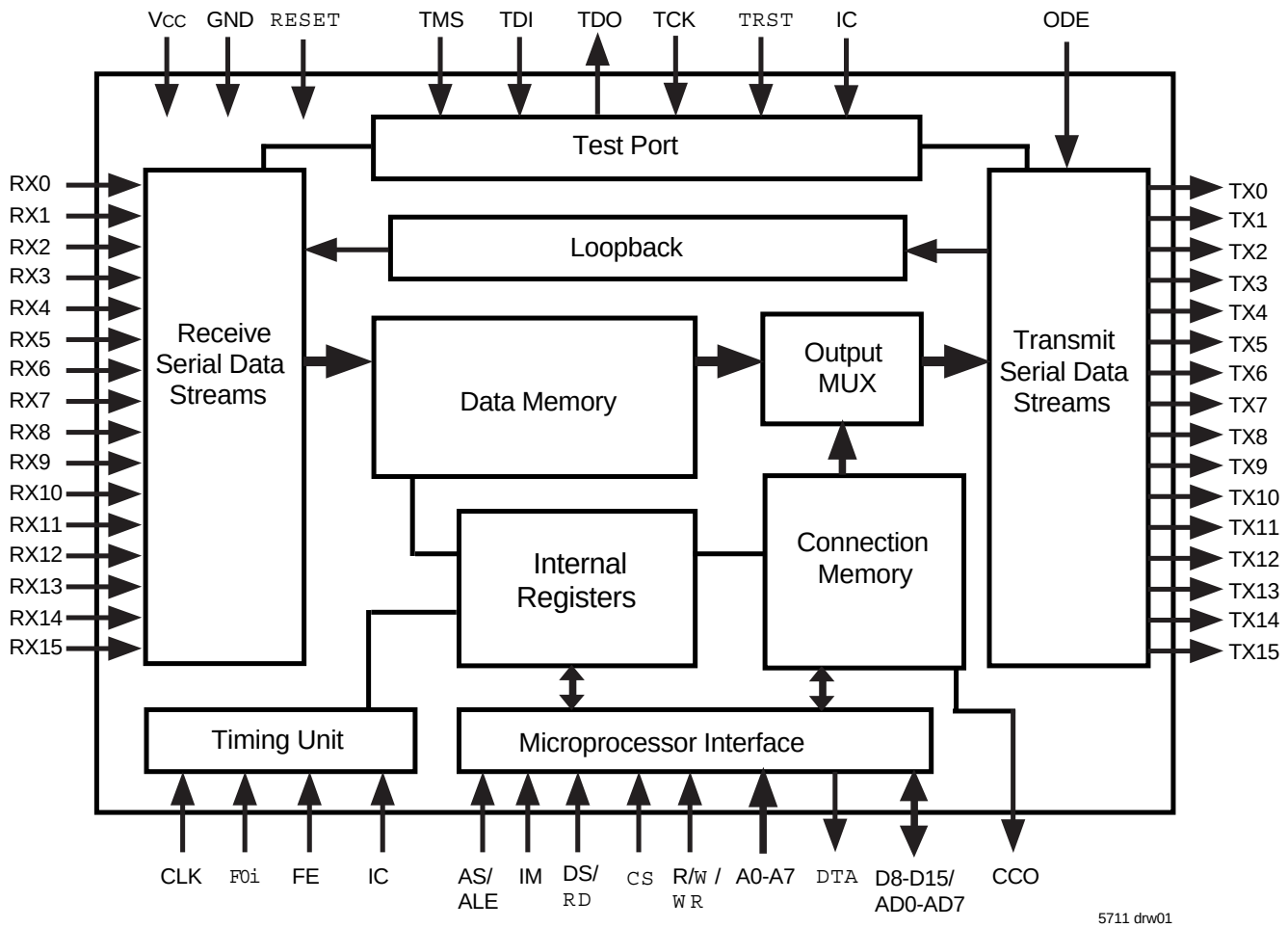

IDT, the IDT logo are registered trademarks of Integrated Device Technology, Inc.

AUGUST 2001

© 2001 Integrated Device Technology, Inc. All rights reserved. Product specifications subject to change without notice.

PIN CONFIGURATIONS

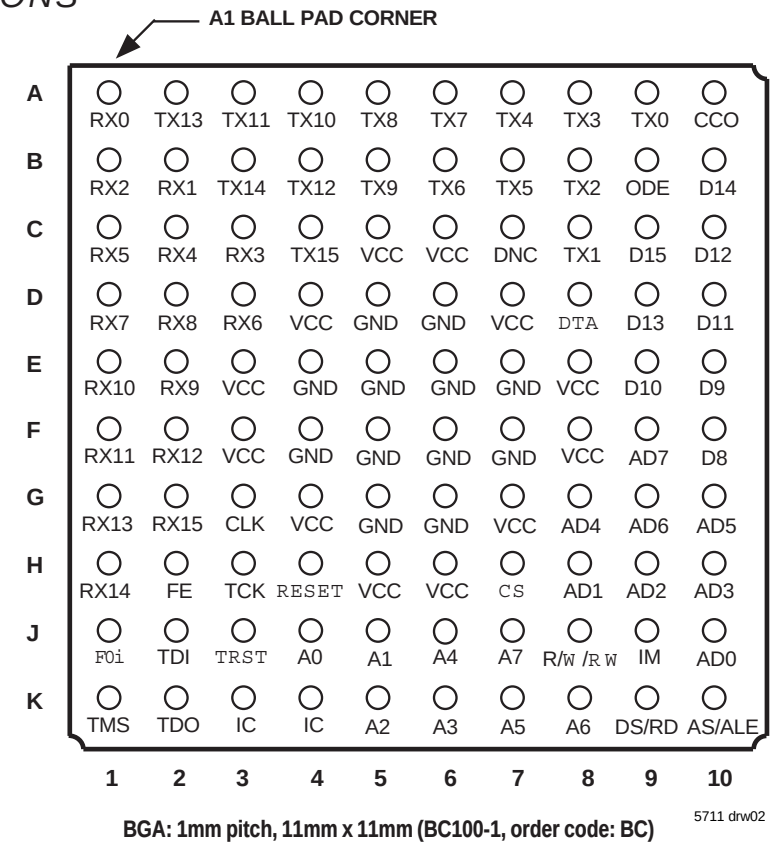

BGA: 1mm pitch, 11mm x 11mm (BC100-1, order code: BC)
TOP VIEW

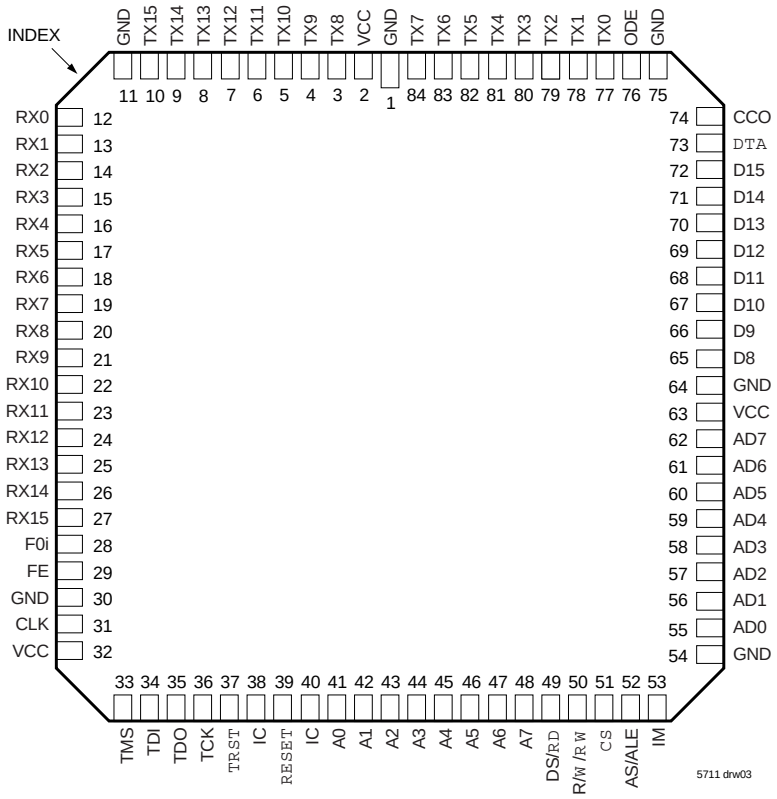

PLCC: 0.05in. pitch, 1.15in. x 1.15in. (PL84-1, order code: J)
TOP VIEW

NOTES:
1. DNC - Do Not Connect
2. IC - Internal Connection, tie to GROUND for normal operation.
3. All I/O pins are 5V tolerant except for TMS, TDI and $\overline{\text{TRST}}$.

PIN CONFIGURATIONS (CONTINUED)

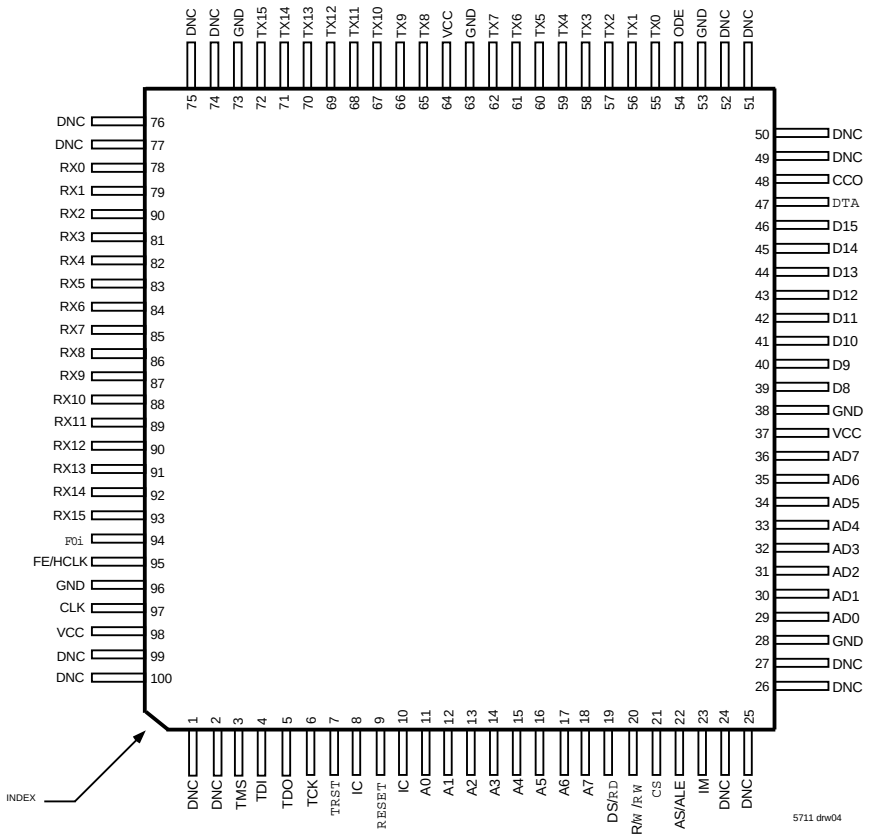

TQFP: 0.50mm pitch, 14mm x 14mm (PN100-1, order code: PF)
TOP VIEW

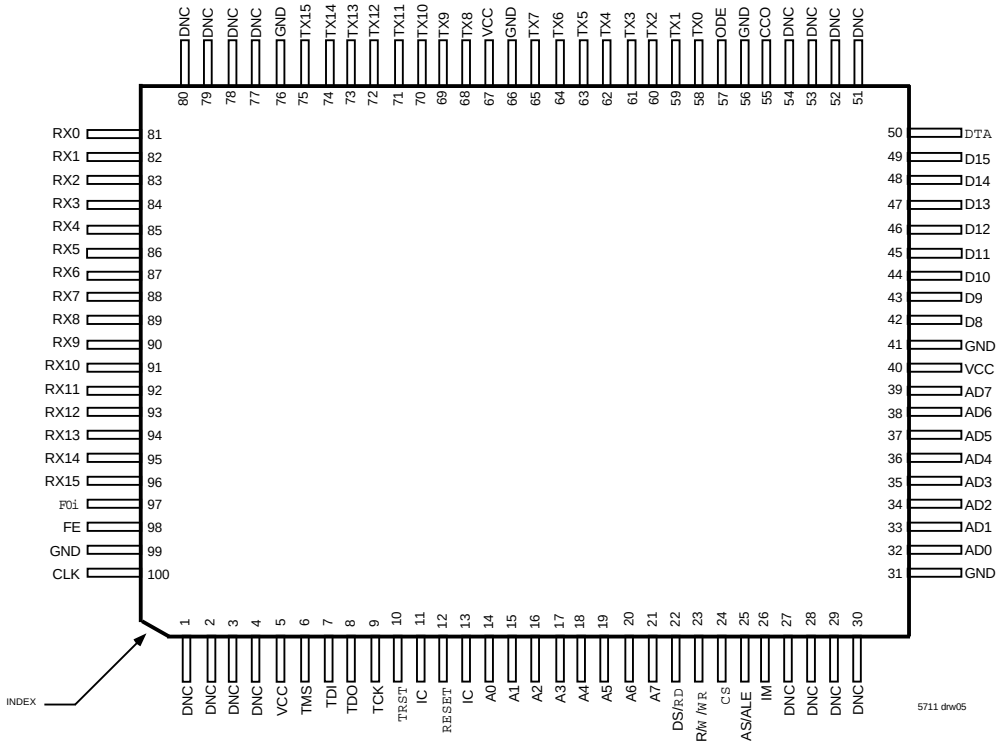

PQFP: 0.65mm pitch, 14mm x 20mm (PQ100-2, order code: PQF)
TOP VIEW

PIN DESCRIPTION

SYMBOL	NAME	I/O	DESCRIPTION
GND	Ground.		Ground Rail.
Vcc	Vcc		+3.3 Volt Power Supply.
TX0-15(1)	TX Output 0 to 15 (Three-state Outputs)	O	Serial data output stream. These streams have a data rate of 2.048 Mb/s.
RX0-15(1)	RX Input 0 to 15	I	Serial data input stream. These streams have a data rate of 2.048 Mb/s.
$\overline{F0i}$(1)	Frame Pulse	I	This input accepts and automatically identifies frame synchronization signals formatted according to ST-BUS® and GCI specifications.
FE(1)	Frame Evaluation	I	This pin is the frame measurement input.
CLK(1)	Clock	I	Serial clock for shifting data in/out on the serial streams (RX/TX 0-15). This input accepts a 4.096 MHz clock.
TMS	Test Mode Select	I	JTAG signal that controls the state transitions of the TAP controller. This pin is pulled HIGH by an internal pull-up when not driven.
TDI	Test Serial Data In	I	JTAG serial test instructions and data are shifted in on this pin. This pin is pulled HIGH by an internal pull-up when not driven.
TDO	Test Serial Data Out	O	JTAG serial data is output on this pin on the falling edge of TCK. This pin is held in high-impedance state when JTAG scan is not enabled.
TCK(1)	Test Clock	I	Provides the clock to the JTAG test logic.
$\overline{TRST}$	Test Reset	I	Asynchronously initializes the JTAG TAP controller by putting it in the Test-Logic-reset state. This pin is pulled by an internal pull-up when not driven. This pin should be pulsed LOW on power-up, or held LOW, to ensure that the IDT72V70200 is in the normal functional mode.
IC(1)	Internal Connection	I	Connect to GND for normal operation. This pin must be LOW for the IDT72V70200 to function normally and to comply with IEEE 1114 (JTAG) boundary scan requirements.
$\overline{RESET}$(1)	Device Reset (Schmitt Trigger Input)	I	This input (active LOW) puts the IDT72V70200 in its reset state that clears the device internal counters, registers and brings TX0-15 and microport data outputs to a high-impedance state. The time constant for a power up reset circuit must be a minimum of five times the rise time of the power supply. In normal operation, the $\overline{RESET}$ pin must be held LOW for a minimum of 100ns to reset the device.
A0-7(1)	Address 0-7	I	When non-multiplexed CPU bus operation is selected, these lines provide the A0-A7 address lines to the internal memories.
DS/$\overline{RD}$(1)	Data Strobe/Read	I	For Motorola multiplexed bus operation, this input is DS. This active HIGH DS input works in conjunction with $\overline{CS}$ to enable the read and write operations. For Motorola non-multiplexed CPU bus operation, this input is DS. This active LOW input works in conjunction with $\overline{CS}$ to enable the read and write operations. For Intel multiplexed bus operation, this input is $\overline{RD}$. This active LOW input sets the data bus lines (AD0-7, D8-15) as outputs.
R/$\overline{W}$ / $\overline{WR}$(1)	Read/Write / Write	I	In the cases of Motorola non-multiplexed and multiplexed bus operations, this input is R/$\overline{W}$. This input controls the direction of the data bus lines (AD0-7, D8-15) during a microprocessor access. For Intel multiplexed bus operation, this input is $\overline{WR}$. This active LOW input is used with $\overline{RD}$ to control the data bus (AD0-7) lines as inputs.
$\overline{CS}$(1)	Chip Select	I	Active LOW input used by a microprocessor to activate the microprocessor port of IDT72V70200.
AS/ALE(1)	Address Strobe or Latch Enable	I	This input is used if multiplexed bus operation is selected via the IM input pin. For Motorola non-multiplexed bus operation, connect this pin to ground.
IM(1)	CPU Interface Mode	I	When IM is HIGH, the microprocessor port is in the multiplexed mode. When IM is LOW, the microprocessor port is in non-multiplexed mode.
AD0-7(1)	Address/Data Bus 0 to 7	I/O	These pins are the eight least significant data bits of the microprocessor port. In multiplexed mode, these pins are also the input address bits of the microprocessor port.
D8-15(1)	Data Bus 8-15	I/O	These pins are the eight most significant data bits of the microprocessor port.
$\overline{DTA}$(1)	Data Transfer Acknowledgment	O	This active LOW output signal indicates that a data bus transfer is complete. When the bus cycle ends, this pin drives HIGH and then goes high-impedance, allowing for faster bus cycles with a weaker pull-up resistor. A pull-up resistor is required to hold a HIGH level when the pin is in high-impedance.
CCO(1)	Control Output	O	This is a 4.096 Mb/s output containing 512 bits per frame respectively. The level of each bit is determined by the CCO bit in the connection memory. See External Drive Control Section.
ODE(1)	Output Drive Enable	I	This is the output enable control for the TX0 to TX15 serial outputs. When ODE input is LOW and the OSB bit of the IMS register is LOW, TX0-15 are in a high-impedance state. If this input is HIGH, the TX0-15 output drivers are enabled. However, each channel may still be put into a high-impedance state by using the per channel control bit in the connection memory.

NOTE:
1. These pins are 5V tolerant.

FUNCTIONAL DESCRIPTION

The IDT72V70200 is capable of switching 512 x 512, 64 Kbit/s PCM or N x 64 Kbit/s channel data. The device maintains frame integrity in data applications and minimum throughput delay for voice applications on a per channel basis.

The serial input streams of the IDT72V70200 can have a bit rate of 2.048 Mb/s and are arranged in 125µs wide frames, which contain 32 channels respectively. The data rates on input and output streams are identical.

In Processor Mode, the microprocessor can access input and output time-slots on a per channel basis allowing for transfer of control and status information. The IDT72V70200 automatically identifies the polarity of the frame synchronization input signal and configures the serial streams to either ST-BUS® or GCI formats.

With the variety of different microprocessor interfaces, IDT72V70200 has provided an Input Mode pin (IM) to help integrate the device into different microprocessor based environments: Non-multiplexed or Multiplexed. These interfaces provide compatibility with multiplexed and Motorola non-multiplexed buses. The device can also resolve different control signals eliminating the use of glue logic necessary to convert the signals (R/$\overline{W}$/$\overline{WR}$, DS/$\overline{RD}$, AS/ALE).

The frame offset calibration function allows users to measure the frame offset delay using a frame evaluation pin (FE). The input offset delay can be programmed for individual streams using internal frame input offset registers, see Table 8.

The internal loopback allows the TX output data to be looped around to the RX inputs for diagnostic purposes.

A functional Block Diagram of the IDT72V70200 is shown in Figure 1.

DATA AND CONNECTION MEMORY

The received serial data is converted to parallel format by internal serial-to-parallel converters and stored sequentially in the data memory. The 8KHz input frame pulse ($\overline{F0i}$) is used to generate channel and frame boundaries of the input serial data. Depending on the interface mode select (IMS) register, the usable data memory may be as large as 512 bytes.

Data to be output on the serial streams (TX0-15) may come from either the data memory or connection memory. For data output from data memory (connection mode), addresses in the connection memory are used. For data to be output from connection memory, the connection memory control bits must set the particular TX output in Processor Mode. One time-slot before the data is to be output, data from either connection memory or data memory is read internally. This allows enough time for memory access and parallel-to-serial conversion.

CONNECTION AND PROCESSOR MODES

In the Connection Mode, the addresses of the input source data for all output channels are stored in the connection memory. The connection memory is mapped in such a way that each location corresponds to an output channel on the output streams. For details on the use of the source address data (CAB and SAB bits), see Table 10. Once the source address bits are programmed by the microprocessor, the contents of the data memory at the selected address are transferred to the parallel-to-serial converters and then onto a TX output stream.

By having the each location in the connection memory specify an input channel, multiple outputs can specify the same input address. This can be a powerful tool used for broadcasting data.

In Processor Mode, the microprocessor writes data to the connection memory. Each location in the connection memory corresponds to a particular output stream and channel number and is transferred directly to the parallel-to-serial converter one time-slot before it is to be output. This data will be output on the TX streams in every frame until the data is changed by the microprocessor.

As the IDT72V70200 can be used in a wide variety of applications, the device also has memory locations to control the outputs based on operating mode. Specifically, the IDT72V70200 provides five per-channel control bits for the following functions: processor or connection mode, constant or variable delay, enables/three-state the TX output drivers and enables/disable the loopback function. In addition, one of these bits allows the user to control the CCO output.

If an output channel is set to a high-impedance state through the connection memory, the TX output will be in a high-impedance state for the duration of that channel. In addition to the per-channel control, all channels on the ST-BUS® outputs can be placed in a high impedance state by either pulling the ODE input pin low or programming the Output Stand-By (OSB) bit in the interface mode selection register. This action overrides the per-channel programming in the connection memory bits.

The connection memory data can be accessed via the microprocessor interface. The addressing of the devices internal registers, data and connection memories is performed through the address input pins and the Memory Select (MS) bit of the control register. For details on device addressing, see Software Control and Control Register bits description (Table 3 and 5).

SERIAL DATA INTERFACE TIMING

The master clock frequency must always be twice the data rate. For serial data rates of 2.048 Mb/s, the master clock (CLK) must be at 4.096 MHz. The input and output stream data rates will always be identical.

The input 8 KHz frame pulse can be in either ST-BUS® or GCI format. The IDT72V70200 automatically detects the presence of an input frame pulse and identifies it as either ST-BUS® or GCI. In ST-BUS® format, every second falling edge of the master clock marks a bit boundary and the data is clocked in on the rising edge of CLK, three quarters of the way into the bit cell, see Figure 7. In GCI format, every second rising edge of the master clock marks the bit boundary and data is clocked in on the falling edge of CLK at three quarters of the way into the bit cell, see Figure 8.

INPUT FRAME OFFSET SELECTION

Input frame offset selection allows the channel alignment of individual input streams to be offset with respect to the output stream channel alignment (i.e. $\overline{F0i}$). Although all input data comes in at the same speed, delays can be caused by variable path serial backplanes and variable path lengths which may be implemented in large centralized and distributed switching systems. Because data is often delayed, this feature is useful in compensating for the skew between clocks.

Each input stream can have its own delay offset value by programming the frame input offset registers (FOR). The maximum allowable skew is +4.5 master clock (CLK) periods forward with resolution of ½ clock period. The output frame offset cannot be offset or adjusted. See Figure 5, Table 8 and 9 for delay offset programming.

SERIAL INPUT FRAME ALIGNMENT EVALUATION

The IDT72V70200 provides the frame evaluation (FE) input to determine different data input delays with respect to the frame pulse $\overline{F0i}$.

A measurement cycle is started by setting the start frame evaluation (SFE) bit low for at least one frame. When the SFE bit in the IMS register is changed from low to high, the evaluation starts. Two frames later, the complete frame evaluation (CFE) bit of the frame alignment register (FAR) changes from low to high to signal that a valid offset measurement is ready to be read from bits 0

to 11 of the FAR register. The SFE bit must be set to zero before a new measurement cycle started.

In ST-BUS® mode, the falling edge of the frame measurement signal (FE) is evaluated against the falling edge of the ST-BUS® frame pulse. In GCI mode, the rising edge of FE is evaluated against the rising edge of the GCI frame pulse. See Table 7 and Figure 4 for the description of the frame alignment register.

MEMORY BLOCK PROGRAMMING

The IDT72V70200 provides users with the capability of initializing the entire connection memory block in two frames. To set bits 11 to 15 of every connection memory location, first program the desired pattern in bits 5 to 9 of the IMS register.

The block programming mode is enabled by setting the memory block program (MBP) bit of the control register high. When the block programming enable (BPE) bit of the IMS register is set to high, the block programming data will be loaded into the bits 11 to 15 of every connection memory location. The other connection memory bits (bit 0 to bit 10) are loaded with zeros. When the memory block programming is complete, the device resets the BPE bit to zero.

LOOPBACK CONTROL

The loopback control (LPBK) bit of each connection memory location allows the TX output data to be looped backed internally to the RX input for diagnostic purposes.

If the LPBK bit is high, the associated TX output channel data is internally looped back to the RX input channel (i.e., data from TX n channel m routes to the RX n channel m internally); if the LPBK bit is low, the loopback feature is disabled. For proper per-channel loopback operation, the contents of frame delay offset registers must be set to zero.

DELAY THROUGH THE IDT72V70200

The switching of information from the input serial streams to the output serial streams results in a throughput delay. The device can be programmed to perform time-slot interchange functions with different throughput delay capabilities on the per-channel basis. For voice applications, variable throughput delay is best as it ensures minimum delay between input and output data. In wideband data applications, constant throughput delay is best as the frame integrity of the information is maintained through the switch.

The delay through the device varies according to the type of throughput delay selected in the $\overline{V}$/C bit of the connection memory.

VARIABLE DELAY MODE ($\overline{V}$/C BIT = 0)

In this mode, the delay is dependent only on the combination of source and destination channels and is independent of input and output streams. The minimum delay achievable in the IDT72V70200 is three time-slots. If the input channel data is switched to the same output channel (channel n, frame p), it will be output in the following frame (channel n, frame p+1). The same is true if input channel n is switched to output channel n+1 or n+2. If the input channel n is switched to output channel n+3, n+4,..., the new output data will appear in the same frame. Table 1 shows the possible delays for the IDT72V70200 in the variable delay mode.

CONSTANT DELAY MODE ($\overline{V}$/C BIT = 1)

In this mode, frame integrity is maintained in all switching configurations by making use of a multiple data memory buffer. Input channel data is written into the data memory buffers during frame n will be read out during frame n+2. In the IDT72V70200, the minimum throughput delay achievable in the constant delay mode will be one frame. For example, when input time-slot 31 is switched to output time-slot 0. The maximum delay of 94 time-slots of delay occurs when time-slot 0 in a frame is switched to time-slot 31 in the frame. See Table 2.

MICROPROCESSOR INTERFACE

The IDT72V70200 provides a parallel microprocessor interface for multiplexed or non-multiplexed bus structures. This interface is compatible with Motorola non-multiplexed and multiplexed buses.

If the IM pin is low a Motorola non-multiplexed bus should be connected to the device. If the IM pin is high, the device monitors the AS/ALE and DS/$\overline{RD}$ to determine what mode the IDT72V70200 should operate in.

If DS/$\overline{RD}$ is low at the rising edge of AS/ALE, then the mode 1 multiplexed timing is selected. If DS/$\overline{RD}$ is high at the rising edge of AS/ALE, then the mode 2 multiplexed bus timing is selected.

For multiplexed operation, the required signals are the 8-bit data and address (AD0-AD7), 8-bit Data (D8-D15), Address strobe/Address latch enable (AS/ ALE), Data strobe/Read (DS/$\overline{RD}$), Read/Write /Write (R/$\overline{W}$ / $\overline{WR}$), Chip select ($\overline{CS}$) and Data transfer acknowledge ($\overline{DTA}$). See Figure 11 and Figure 12 for multiplexed parallel microport timing.

For the Motorola non-multiplexed bus, the required signals are the 16-bit data bus (AD0-AD7, D8-D15), 8-bit address bus (A0-A7) and 4 control lines ($\overline{CS}$, DS, R/$\overline{W}$ and $\overline{DTA}$). See Figure 13 and 14 for Motorola non-multiplexed microport timing.

The IDT72V70200 microport provides access to the internal registers, connection and data memories. All locations provide read/write access except for the data memory and the frame alignment register which are read only.

MEMORY MAPPING

The address bus on the microprocessor interface selects the internal registers and memories of the IDT72V70200.

If the A7 address input is low, then A6 through A0 are used to address the interface mode selection (IMS), control (CR), frame alignment (FAR) and frame input offset (FOR) registers (Table 4). If the A7 is high, A6 and A5 are low, then A4 through A0 are used to select 32 locations corresponding to data rate of the ST-BUS®. The address input lines and the stream address bits (STA) of the control register allow access to the entire data and connection memories. The control and IMS registers together control all the major functions of the device, see Figure 3.

As explained in the Serial Data Interface Timing and Switching Configurations sections, after system power-up, the IMS register should be programmed immediately to establish the desired switching configuration.

The data in the control register consists of the memory block programming bit (MBP), the memory select bit (MS) and the stream address bits (STA). As explained in the Memory Block Programming section, the MBP bit allows the entire connection memory block to be programmed. The memory select bit is used to designate the connection memory or the data Memory. The stream address bits select internal memory subsections corresponding to input or output serial streams.

The data in the IMS register consists of block programming bits (BPD0-BPD4), block programming enable bit (BPE), output stand by bit (OSB) and start frame evaluation bit (SFE). The block programming and the block programming enable bits allows users to program the entire connection memory (see Memory Block Programming section). If the ODE pin is low, the OSB bit enables (if high) or disables (if low) all ST-BUS® output drivers. If the ODE pin is high, the contents of the OSB bit is ignored and all TX output drivers are enabled.

CONNECTION MEMORY CONTROL

The CCO pin is a 4.096 Mb/s output, which carries 512 bits. The contents of the CCO bit of each connection memory location are output on the CCO pin once every frame. The contents of the CCO bits of the connection memory are transmitted sequentially on to the CCO pin and are synchronous with the data rates on the other serial streams.

The CCO bit is output one channel before the corresponding channel on the serial streams. For example, the contents of the CCO bit in position 0 (TX0, CH0) of the connection memory is output on the first clock cycle of channel 31 through CCO pin. The contents of the CCO bit in position 32 (TX1, CH0) of the connection memory is output on the second clock cycle of channel 31 via CCO pin.

If the ODE pin or the OSB bit is high, the OE bit of each connection memory location controls the output drivers-enables (if high) or disables (if low). See Table 4 for detail.

The processor channel (PC) bit of the connection memory selects between Processor Mode and Connection Mode. If high, the contents of the connection memory are output on the TX streams. If low, the stream address bit (SAB) and the channel address bit (CAB) of the connection memory defines the source information (stream and channel) of the time-slot that will be switched to the output from data memory.

The $\overline{V}$/C (Variable/Constant Delay) bit in each connection memory location allows the per-channel selection between variable and constant throughput delay modes.

If the LPBK bit is high, the associated TX output channel data is internally looped back to the RX input channel (i.e., RX n channel m data comes from the TX n channel m). If the LPBK bit is low, the loopback feature is disabled. For proper per-channel loopback operation, the contents of the frame delay offset registers must be set to zero.

INITIALIZATION OF THE IDT72V70200

After power up, the state of the connection memory is unknown. As such, the outputs should be put in high impedance by holding the ODE low. While the ODE is low, the microprocessor can initialize the device, program the active paths, and disable unused outputs by programming the OE bit in connection memory. Once the device is configured, the ODE pin (or OSB bit depending on initialization) can be switched.

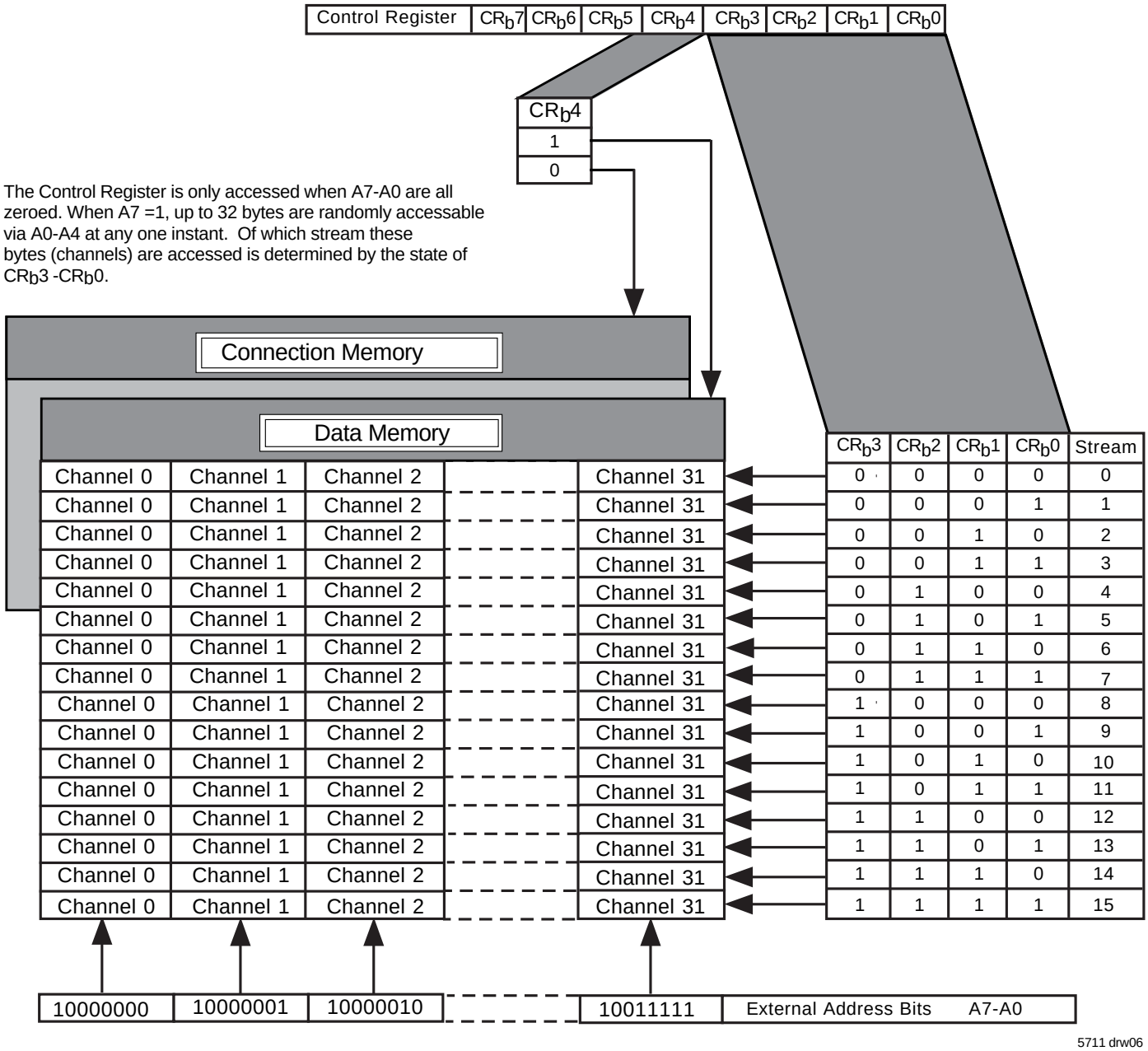

Figure 3. Addressing Internal Memories

TABLE 1 — VARIABLE THROUGHPUT DELAY VALUE

Input Rate	Delay for Variable Throughput Delay Mode (m – output channel number) (n – input channel number)		
	m < n	m = n, n+1, n+2	m > n+2
2.048 Mb/s	32 – (n-m) time-slots	m-n + 32 time-slots	m-n time-slots

TABLE 2 — CONSTANT THROUGHPUT DELAY VALUE

Input Rate	Delay for Constant Throughput Delay Mode (m – output channel number) (n – input channel number)
2.048 Mb/s	32 + (32 – n) + m time-slots

TABLE 3 — INTERNAL REGISTER AND ADDRESS MEMORY MAPPING

A7[1]	A6	A5	A4	A3	A2	A1	A0	Location
0	0	0	0	0	0	0	0	Control Register, CR
0	0	0	0	0	0	0	1	Interface Mode Selection Register, IMS
0	0	0	0	0	0	1	0	Frame Alignment Register, FAR
0	0	0	0	0	0	1	1	Frame Input Offset Register 0, FOR0
0	0	0	0	0	1	0	0	Frame Input Offset Register 1, FOR1
0	0	0	0	0	1	0	1	Frame Input Offset Register 2, FOR2
0	0	0	0	0	1	1	0	Frame Input Offset Register 3, FOR3
1	0	0	0	0	0	0	0	Ch0
1	0	0	0	0	0	0	1	Ch1
1	0	0	.	.	.	.	.	.
1	0	0	1	1	1	1	0	Ch30
1	0	0	1	1	1	1	1	Ch31

NOTE:

1. Bit A7 must be high for access to data and connection memory positions. Bit A7 must be low for access to registers.

TABLE 4 — OUTPUT HIGH IMPEDANCE CONTROL

OE bit in Connection Memory	ODE pin	OSB bit in IMS Register	TX Output Driver Status
0	Don't Care	Don't Care	Per Channel High-Impedance
1	0	0	High-Impedance
1	0	1	Enable
1	1	1	Enable
1	1	0	Enable

TABLE 5 — CONTROL REGISTER (CR) BITS

Read/Write Address: 00H,
Reset Value: 0000H.

15	14	13	12	11	10	9	8	7	6	5	4	3	2	1	0
0	0	0	0	0	0	0	0	0	0	MBP	MS	STA3	STA2	STA1	STA0

Bit	Name	Description
15-6	Unused	Must be zero for normal operation.
5	MBP (Memory Block Program)	When 1, the connection memory block programming feature is ready for the programming of Connection Memory high bits, bit 11 to bit 15. When 0, this feature is disabled.
4	MS (Memory Select)	When 0, connection memory is selected for read or write operations. When 1, the data memory is selected for read operations and connection memory is selected for write operations. (No microprocessor write operation is allowed for the data memory.)
3-0	STA3-0 (Stream Address Bits)	The binary value expressed by these bits refers to the input or output data stream, which corresponds to the subsection of memory made accessible for subsequent operations. (STA3 = MSB, STA0 = LSB)

TABLE 6 — INTERFACE MODE SELECTION (IMS) REGISTER BITS

Read/Write Address: 01H,
Reset Value: 0000H.

15	14	13	12	11	10	9	8	7	6	5	4	3	2	1	0
0	0	0	0	0	0	BPD4	BPD3	BPD2	BPD1	BPD0	BPE	OSB	SFE	0	0

Bit	Name	Description
15-10	Unused	Must be zero for normal operation.
9-5	BPD4-0 (Block Programming Data)	These bits carry the value to be loaded into the connection memory block whenever the memory block programming feature is activated. After the MBP bit in the control register is set to 1 and the BPE bit is set to 1, the contents of the bits BPD4-0 are loaded into bit 15 and 11 of the connection memory. Bit 10 to bit 0 of the connection memory are set to 0.
4	BPE (Begin Block Programming Enable)	A zero to one transition of this bit enables the memory block programming function. The BPE and BPD4-0 bits in the IMS register have to be defined in the same write operation. Once the BPE bit is set HIGH, the device requires two frames to complete the block programming. After the programming function has finished, the BPE bit returns to zero to indicate the operation is completed. When the BPE = 1, the BPE or MBP can be set to 0 to ensure proper operation. When BPE = 1, the other bit in the IMS register must not be changed for two frames to ensure proper operation.
3	OSB (Output Stand By)	When ODE = 0 and OSB = 0, the output drivers of TX0 to TX15 are in high impedance mode. When ODE = 0 and OSB = 1, the output driver of TX0 to TX15 function normally. When ODE = 1, TX0 to TX15 output drivers function normally.
2	SFE (Start Frame Evaluation)	A zero to one transition in this bit starts the frame evaluation procedure. When the CFE bit in the FAR register changes from zero to one, the evaluation procedure stops. To start another fame evaluation cycle, set this bit to zero for at least one frame.
1-0	Unused	Must be zero for normal operation.

TABLE 7 — FRAME ALIGNMENT REGISTER (FAR) BITS

Read/Write Address: 02H,
Reset Value: 0000H.

15	14	13	12	11	10	9	8	7	6	5	4	3	2	1	0
0	0	0	CFE	FD11	FD10	FD9	FD8	FD7	FD6	FD5	FD4	FD3	FD2	FD1	FD0

Bit	Name	Description
15-13	Unused	Must be zero for normal operation.
12	CFE (Complete Frame Evaluation)	When CFE = 1, the frame evaluation is completed and bits FD10 to FD0 bits contains a valid frame alignment offset. This bit is reset to zero, when SFE bit in the IMS register is changed from 1 to 0.
11	FD11 (Frame Delay Bit 11)	The falling edge of FE (or rising edge for GCI mode) is sampled during the CLK-high phase (FD11 = 1) or during the CLK-low phase (FD11 = 0). This bit allows the measurement resolution to ½ CLK cycle.
10-0	FD10-0 (Frame Delay Bits)	The binary value expressed in these bits refers to the measured input offset value. These bits are rest to zero when the SFE bit of the IMS register changes from 1 to 0. (FD10 – MSB, FD0 – LSB)

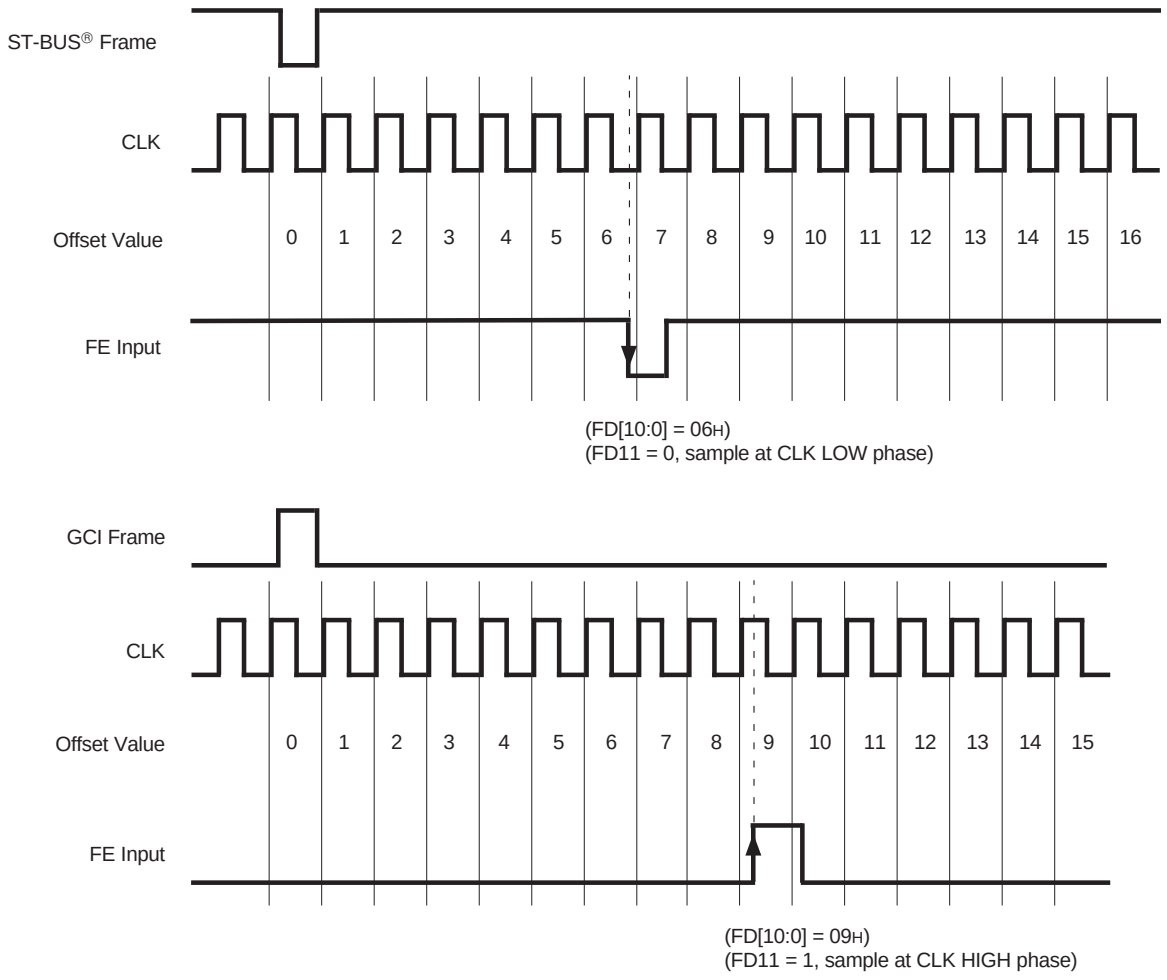

5711 drw07

Figure 4. Example for Frame Alignment Measurement

TABLE 8 — FRAME INPUT OFFSET REGISTER (FOR) BITS

Read/Write Address: 03_H for FOR0 register,
04_H for FOR1 register,
05_H for FOR2 register,
06_H for FOR3 register,

Reset Value: 0000_H for all FOR registers.

15	14	13	12	11	10	9	8	7	6	5	4	3	2	1	0
OF32	OF31	OF30	DLE3	OF22	OF21	OF20	DLE2	OF12	OF11	OF10	DLE1	OF02	OF01	OF00	DLE0

FOR0 Register

15	14	13	12	11	10	9	8	7	6	5	4	3	2	1	0
OF72	OF71	OF70	DLE7	OF62	OF61	OF60	DLE6	OF52	OF51	OF50	DLE5	OF42	OF41	OF40	DLE4

FOR1 Register

15	14	13	12	11	10	9	8	7	6	5	4	3	2	1	0
OF112	OF111	OF110	DLE11	OF102	OF101	OF100	DLE10	OF92	OF91	OF90	DLE9	OF82	OF81	OF80	DLE8

FOR2 Register

15	14	13	12	11	10	9	8	7	6	5	4	3	2	1	0
OF152	OF151	OF150	DLE15	OF142	OF141	OF140	DLE14	OF132	OF131	OF130	DLE13	OF122	OF121	OF120	DLE12

FOR3 Register

Name[1]	Description
OFn2, OFn1, OFn0 (Offset Bits 2, 1 & 0)	These three bits define how long the serial interface receiver takes to recognize and store bit 0 from the RX input pin: i.e., to start a new frame. The input frame offset can be selected to +4.5 clock periods from the point where the external frame pulse input signal is applied to the $\overline{F0i}$ input of the device. See Figure 5.
DLEn (Data Latch Edge)	ST-BUS® mode: DLEn = 0, if clock rising edge is at the ¾ point of the bit cell. DLEn = 1, if when clock falling edge is at the ¾ of the bit cell. GCI mode: DLEn = 0, if clock falling edge is at the ¾ point of the bit cell. DLEn = 1, if when clock rising edge is at the ¾ of the bit cell.

NOTE:
1. n denotes an input stream number from 0 to 15.

TABLE 9 — OFFSET BITS (OFn2, OFn1, OFn0, DLEn) & FRAME DELAY BITS (FD11, FD2-0)

Input Stream Offset	Measurement Result from Frame Delay Bits				Corresponding Offset Bits			
	FD11	FD2	FD1	FD0	OFn2	OFn1	OFn0	DLEn
No clock period shift (Default)	1	0	0	0	0	0	0	0
+ 0.5 clock period shift	0	0	0	0	0	0	0	1
+ 1.0 clock period shift	1	0	0	1	0	0	1	0
+ 1.5 clock period shift	0	0	0	1	0	0	1	1
+ 2.0 clock period shift	1	0	1	0	0	1	0	0
+ 2.5 clock period shift	0	0	1	0	0	1	0	1
+ 3.0 clock period shift	1	0	1	1	0	1	1	0
+ 3.5 clock period shift	0	0	1	1	0	1	1	1
+ 4.0 clock period shift	1	1	0	0	1	0	0	0
+ 4.5 clock period shift	0	1	0	0	1	0	0	1

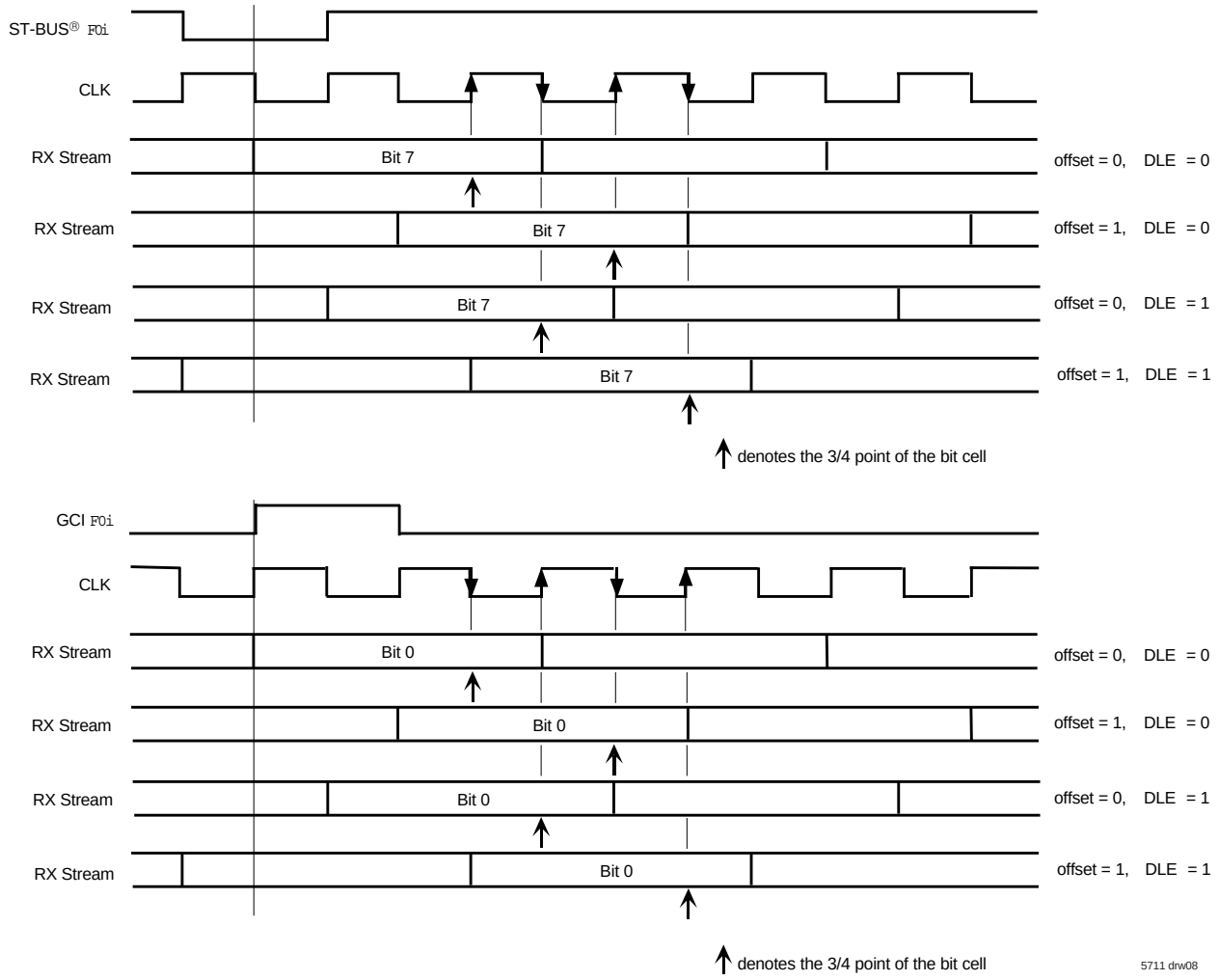

Figure 5. Examples for Input Offset Delay Timing

TABLE 10 — CONNECTION MEMORY BITS

15	14	13	12	11	10	9	8	7	6	5	4	3	2	1	0
LPBK	$\overline{V}$/C	PC	CCO	OE	SAB3	SAB2	SAB1	SAB0	0	0	CAB4	CAB3	CAB2	CAB1	CAB0

Bit	Name	Description
15	LPBK (Per Channel Loopback)	When 1, the RX n channel m data comes from the TX n channel m. For proper per channel loopback operations, set the delay offset register bits OFn[2:0] to zero for the streams which are in the loopback mode.
14	$\overline{V}$/C (Variable/Constant Throughput Delay)	This bit is used to select between the variable (LOW) and constant delay (HIGH) mode on a per-channel basis.
13	PC (Processor Channel)	When 1, the contents of the connection memory are output on the corresponding output channel and stream. Only the lower byte (bit 7 – bit 0) will be output to the TX output pins. When 0, the contents of the connection memory are the data memory address of the switched input channel and stream.
12	CCO (Control Channel Output)	This bit is output on the CCO pin one channel early. The CCO bit for stream 0 is output first.
11	OE (Output Enable)	This bit enables the TX output drivers on a per-channel basis. When 1, the output driver functions normally. When 0, the output driver is in a high-impedance state.
10-8,7[1]	SAB3-0 (Source Stream Address Bits)	The binary value is the number of the data stream for the source of the connection.
6,5[1]	Unused	Must be zero for normal operation.
4-0[1]	CAB4-0 (Source Channel Address Bits)	The binary value is the number of the channel for the source of the connection.

NOTE:

1. If bit 13 (PC) of the corresponding connection memory location is 1 (device in processor mode), then these entire 8 bits (SAB0, bits 6-5, CAB4 - CAB0) are output on the output channel and stream associated with this location.

JTAG SUPPORT

The IDT72V70200 JTAG interface conforms to the Boundary-Scan standard IEEE-1149.1. This standard specifies a design-for-testability technique called Boundary-Scan Test (BST). The operation of the boundary-scan circuitry is controlled by an external test access port (TAP) Controller.

TEST ACCESS PORT (TAP)

The Test Access Port (TAP) provides access to the test functions of the IDT72V70200. It consists of three input pins and one output pin.

•Test Clock Input (TCK)

TCK provides the clock for the test logic. The TCK does not interfere with any on-chip clock and thus remain independent. The TCK permits shifting of test data into or out of the Boundary-Scan register cells concurrently with the operation of the device and without interfering with the on-chip logic.

•Test Mode Select Input (TMS)

The logic signals received at the TMS input are interpreted by the TAP Controller to control the test operations. The TMS signals are sampled at the rising edge of the TCK pulse. This pin is internally pulled to Vcc when it is not driven from an external source.

•Test Data Input (TDI)

Serial input data applied to this port is fed either into the instruction register or into a test data register, depending on the sequence previously applied to the TMS input. Both registers are described in a subsequent section. The received input data is sampled at the rising edge of TCK pulses. This pin is internally pulled to Vcc when it is not driven from an external source.

•Test Data Output (TDO)

Depending on the sequence previously applied to the TMS input, the contents of either the instruction register or data register are serially shifted out towards the TDO. The data out of the TDO is clocked on the falling edge of the TCK pulses. When no data is shifted through the boundary scan cells, the TDO driver is set to a high impedance state.

•Test Reset ($\overline{TRST}$)

Reset the JTAG scan structure. This pin is internally pulled to VCC.

INSTRUCTION REGISTER

In accordance with the IEEE 1149.1 standard, the IDT72V70200 uses public instructions. The IDT72V70200 JTAG Interface contains a two-bit instruction register. Instructions are serially loaded into the instruction register from the TDI when the TAP Controller is in its shifted-IR state. Subsequently, the instructions are decoded to achieve two basic functions: to select the test data register that may operate while the instruction is current, and to define the serial test data register path, which is used to shift data between TDI and TDO during data register scanning. See Table below for Instruction decoding.

Value	Instruction	Function
000	EXTEST	Select Boundary Scan Register
001	EXTEST	Select Boundary Scan Register
010	Sample/preload	Select Boundary Scan Register
011	Sample/preload	Select Boundary Scan Register
100	Sample/preload	Select Boundary Scan Register
101	Sample/preload	Select Boundary Scan Register
110	Bypass	Select Bypass Register
111	Bypass	Select Bypass Register

JTAG Instruction Register Decoding

TEST DATA REGISTER

As specified in IEEE 1149.1, the IDT72V70200 JTAG Interface contains two test data registers:

•The Boundary-Scan register

The Boundary-Scan register consists of a series of Boundary-Scan cells arranged to form a scan path around the boundary of the IDT72V70200 core logic.

•The Bypass Register

The Bypass register is a single stage shift register that provides a one-bit path from TDI to its TDO. The IDT72V70200 boundary scan register contains 118 bits. Bit 0 in Table 11 Boundary Scan Register is the first bit clocked out. All three-state enable bits are active high.

TABLE 11 — BOUNDARY SCAN REGISTER BITS

Device Pin	Boundary Scan Bit 0 to bit 117		
	Three-State Control	Output Scan Cell	Input Scan Cell
TX7	0	1	
TX6	2	3	
TX5	4	5	
TX4	6	7	
TX3	8	9	
TX2	10	11	
TX1	12	13	
TX0	14	15	
ODE			16
CCO	17	18	
$\overline{DTA}$		19	
D15	20	21	22
D14	23	24	25
D13	26	27	28
D12	29	30	31
D11	32	33	34
D10	35	36	37
D9	38	39	40
D8	41	42	43
AD7	44	45	46
AD6	47	48	49
AD5	50	51	52
AD4	53	54	55
AD3	56	57	58
AD2	59	60	61
AD1	62	63	64
AD0	65	66	67
IM			68
AD/ALE			69
$\overline{CS}$			70
R/$\overline{W}$ / $\overline{WR}$			71
DS/$\overline{RD}$			72
A7			73
A6			74
A5			75

Device Pin	Boundary Scan Bit 0 to bit 117		
	Three-State Control	Output Scan Cell	Input Scan Cell
A4			76
A3			77
A2			78
A1			79
A0			80
IC			81
$\overline{RESET}$			82
CLK			83
FE			84
$\overline{F0i}$			85
RX15			86
RX14			87
RX13			88
RX12			89
RX11			90
RX10			91
RX9			92
RX8			93
RX7			94
RX6			95
RX5			96
RX4			97
RX3			98
RX2			99
RX1			100
RX0			101
TX15	102	103	
TX14	104	105	
TX13	106	107	
TX12	108	109	
TX11	110	111	
TX10	112	113	
TX9	114	115	
TX8	116	117	

ABSOLUTE MAXIMUM RATINGS(1)

Symbol	Parameter	Min.	Max.	Unit
V_{CC}	Supply Voltage	-0.3	5.0	V
V_i	Voltage on Digital Inputs	GND -0.3	5.5	V
I_O	Current at Digital Outputs		20	mA
T_S	Storage Temperature	-65	+125	°C
P_D	Package Power Dissapation	—	1	W

NOTE:
1. Exceeding these values may cause permanent damage. Functional operation under these conditions is not implied.

RECOMMENDED DC OPERATING CONDITIONS

Symbol	Parameter	Min.	Typ.	Max.	Units
V_{CC}	Positive Supply	3.0	—	3.6	V
V_{IH}	Input HIGH Voltage (3.3V)	2.0	—	V_{CC}	V
V_{IH}	Input HIGH Voltage (5.0V)	2.0	—	5.5	V
V_{IL}	Input LOW Voltage	GND	—	0.8	V
T_{OP}	Operating Temperature Commercial	-40	—	+85	°C

NOTE:
1. Voltages are with respect to ground unless other wise stated.

DC ELECTRICAL CHARACTERISTICS

Symbol	Characteristics	Min.	Typ.	Max.	Units
I_{CC}(1)	Supply Current @ 2.048 Mb/s	—	7	10	mA
I_{IL}(2)	Input Leakage (input pins)	—	—	15	µA
I_{BL}	Input Leakage (I/O pins)	—	—	50	µA
C_I	Input Pin Capacitance	—	—	10	pF
I_{OZ}	High-impedance Leakage	—	—	5	µA
V_{OH}	Output HIGH Voltage	2.4	—	—	V
V_{OL}	Output LOW Voltage	—	—	0.4	V
C_O	Output Pin Capacitance	—	—	10	pF

NOTE:
1. Outputs Unloaded.
2. For TDI, TMS, and TRST pins, the maximum leakage current is 50µA.

S1 is open circuit except when testing output levels or high impedance states.

S2 is switched to V_{CC} or GND when testing output levels or high impedance states.

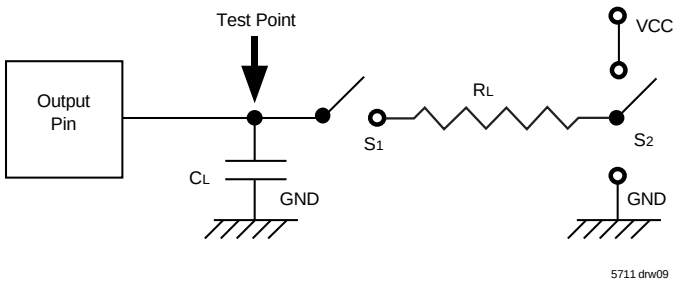

Figure 6. Output Load

AC ELECTRICAL CHARACTERISTICS - FRAME PULSE AND CLK

Symbol	Characteristics	Min.	Typ.	Max.	Units
t_{FPW}	Frame Pulse Width (ST-BUS®, GCI) — Bit rate = 2.048 Mb/s	26	—	295	ns
t_{FPS}	Frame Pulse Setup time before CLK falling (ST-BUS® or GCI)	5	—	—	ns
t_{FPH}	Frame Pulse Hold Time from CLK falling (ST-BUS® or GCI)	10	—	—	ns
t_{CP}	CLK Period — Bit rate = 2.048 Mb/s	190	—	300	ns
t_{CH}	CLK Pulse Width HIGH — Bit rate = 2.048 Mb/s	85	—	150	ns
t_{CL}	CLK Pulse Width LOW — Bit rate = 2.048 Mb/s	85	—	150	ns
t_r, t_f	Clock Rise/Fall Time	—	—	10	ns

AC ELECTRICAL CHARACTERISTICS - SERIAL STREAMS (1)

Symbol	Characteristics	Min.	Typ.	Max.	Unit	Test Conditions
t_{SIS}	RX Setup Time	0	—	—	ns	
t_{SIH}	RX Hold Time	10	—	—	ns	
t_{SOD}	TX Delay – Active to Active	— —	— —	30 40	ns ns	C_L = 30pF C_L = 200pF
t_{DZ}	TX Delay – Active to High-Z	—	—	32	ns	R_L = 1KΩ, C_L = 200pF
t_{ZD}	TX Delay – High-Z to Active	—	—	32	ns	R_L = 1KΩ, C_L = 200pF
t_{ODE}	Output Driver Enable (ODE) Delay	—	—	32	ns	R_L = 1KΩ, C_L = 200pF
t_{XCD}	CCO Output Delay	— —	— —	30 40	ns ns	C_L = 30pF C_L = 200pF

NOTE:
1. High Impedance is measured by pulling to the appropriate rail with R_L, with timing corrected to cancel time taken to discharge C_L.

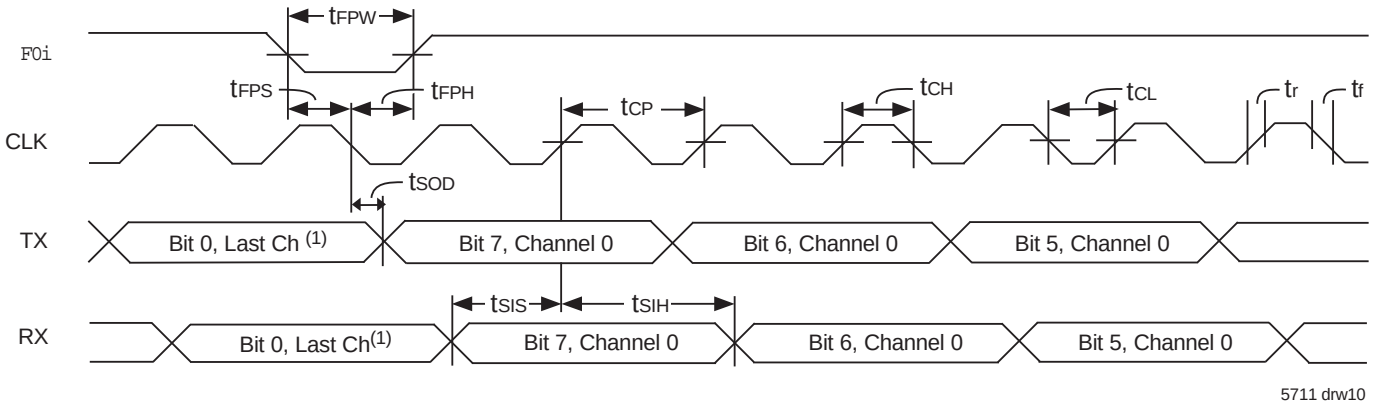

Figure 7. ST-BUS® Timing

NOTE:
1. last channel = ch 31.

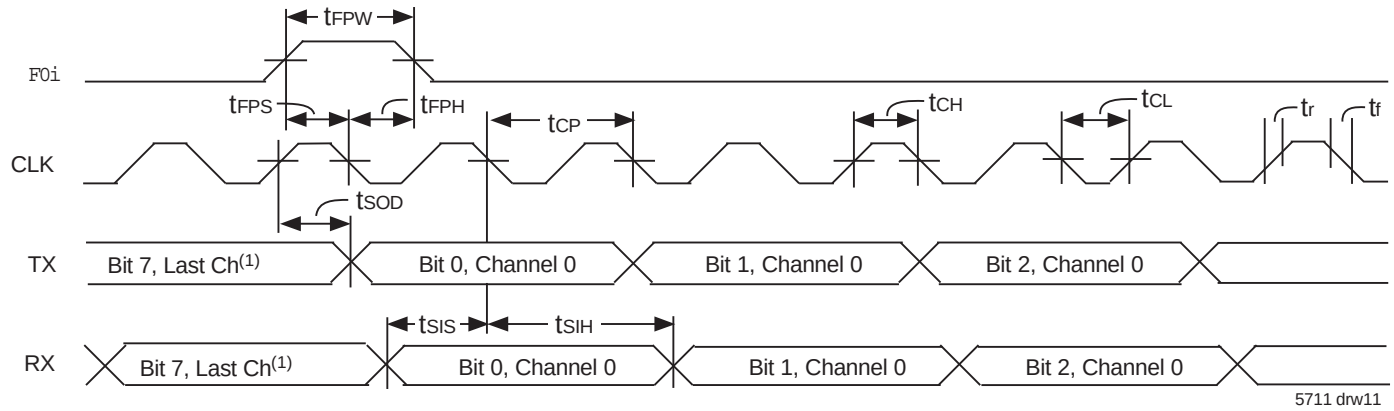

Figure 8. GCI Timing

NOTE:
1. last channel = ch 31.

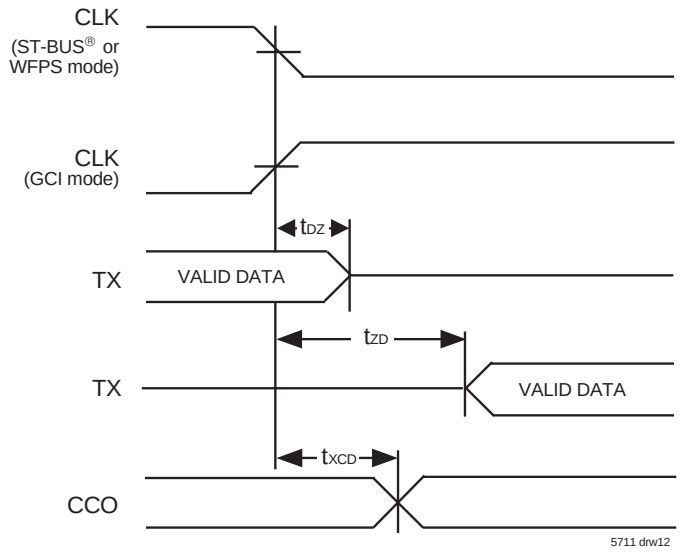

Figure 9. Serial Output and External Control

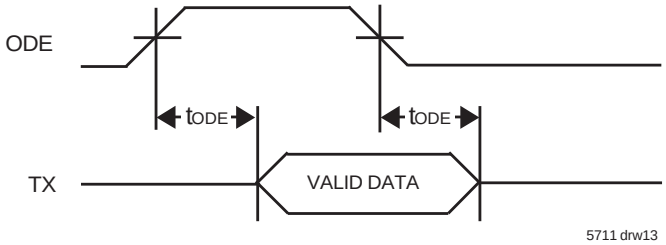

Figure 10. Output Driver Enable (ODE)

AC ELECTRICAL CHARACTERISTICS - MULTIPLEXED BUS TIMING (INTEL)

Symbol	Parameter	Min.	Typ.	Max.	Units	Test Conditions
t_{ALW}	ALE Pulse Width	20			ns	
t_{ADS}	Address Setup from ALE falling	3			ns	
t_{ADH}	Address Hold from ALE falling	3			ns	
t_{ALRD}	$\overline{RD}$ Active after ALE falling	3			ns	
t_{DDR}	Data Setup from $\overline{DTA}$ LOW on Read	5			ns	C_L = 150pF
t_{CSRW}	$\overline{CS}$ Hold after $\overline{RD}$/$\overline{WR}$	5			ns	
t_{RW}	$\overline{RD}$ Pulse Width (Fast Read)	45			ns	
t_{CSR}	$\overline{CS}$ Setup from $\overline{RD}$	0			ns	
t_{DHR}(1)	Data Hold after $\overline{RD}$	10		20	ns	C_L = 150pF, R_L = 1K
t_{WW}	WR Pulse Width (Fast Write)	45			ns	
t_{ALWR}	WR Delay after ALE falling	3			ns	
t_{CSW}	$\overline{CS}$ Setup from $\overline{WR}$	0			ns	
t_{DSW}	Data Setup from $\overline{WR}$ (Fast Write)	20			ns	
t_{SWD}	Valid Data Delay on Write (Slow Write)			122	ns	
t_{DHW}	Data Hold after $\overline{WR}$ Inactive	5			ns	
t_{AKD}	Acknowledgment Delay:					
	Reading/Writing Registers			43/43	ns	C_L = 150pF
	Reading/Writing Memory			760/750	ns	C_L = 150pF
t_{AKH}(1)	Acknowledgment Hold Time			22	ns	C_L = 150pF, R_L = 1K

NOTE:
1. High Impedance is measured by pulling to the appropriate rail with R_L, with timing corrected to cancel time taken to discharge C_L.

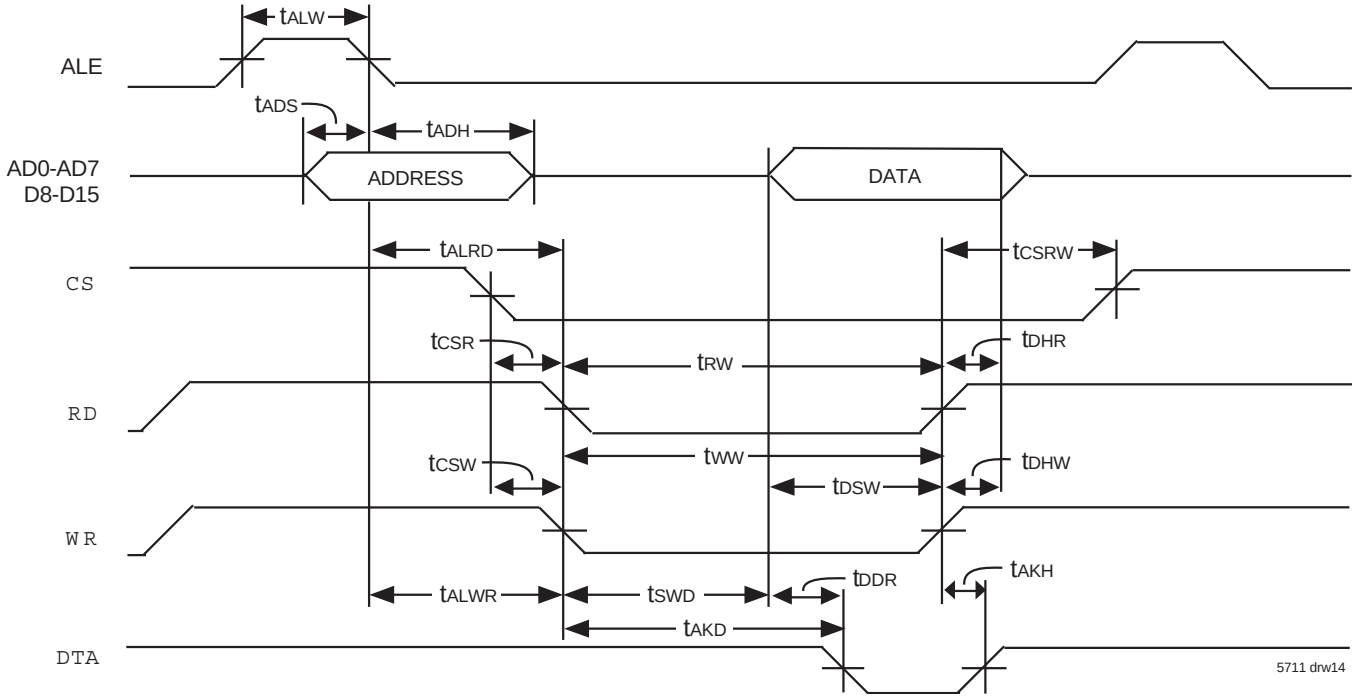

Figure 11. Multiplexed Bus Timing (Intel Mode)

AC ELECTRICAL CHARACTERISTICS - MULTIPLEXED BUS TIMING (MOTOROLA)

Symbol	Parameter	Min.	Typ.	Max.	Units	Test Conditions
t_{ASW}	ALE Pulse Width	20			ns	
t_{ADS}	Address Setup from AS falling	3			ns	
t_{ADH}	Address Hold from AS falling	3			ns	
t_{DDR}	Data Setup from $\overline{DTA}$ LOW on Read	5			ns	C_L = 150pF
t_{CSH}	$\overline{CS}$ Hold after DS falling	0			ns	
t_{CSS}	$\overline{CS}$ Setup from DS rising	0			ns	
t_{DHW}	Data Hold after Write	5			ns	
t_{DWS}	Data Setup from DS – Write (Fast Write)	20			ns	
t_{SWD}	Valid Data Delay on Write (Slow Write)			122	ns	
t_{RWS}	R/$\overline{W}$ Setup from DS Rising	60			ns	
t_{RWH}	R/$\overline{W}$ Hold from DS Rising	5			ns	
t_{DHR}(1)	Data Hold after Read	10		20	ns	C_L = 150pF, R_L = 1K
t_{DSH}	DS Delay after AS falling	10			ns	
t_{AKD}	Acknowledgment Delay:					
	Reading/Writing Registers			43/43	ns	C_L = 150pF
	Reading/Writing Memory			760/750	ns	C_L = 150pF
t_{AKH}(1)	Acknowledgment Hold Time			22	ns	C_L = 150pF, R_L = 1K

NOTE:
1. High Impedance is measured by pulling to the appropriate rail with R_L, with timing corrected to cancel time taken to discharge C_L.

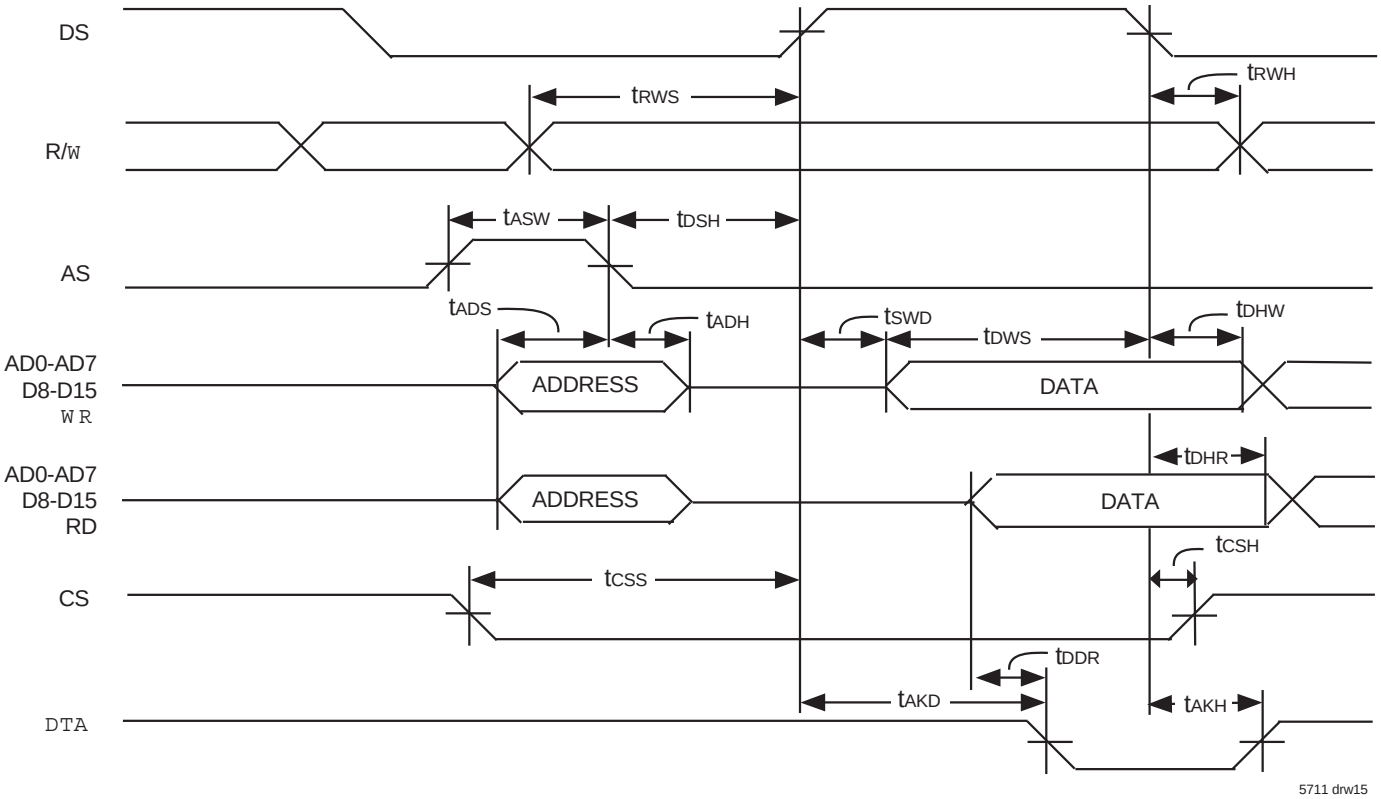

Figure 12. Multiplexed Bus Timing (Motorola Mode)

AC ELECTRICAL CHARACTERISTICS-MOTOROLA NON-MULTIPLEXED BUS MODE

Symbol	Parameter	Min.	Typ.	Max.	Units	Test Conditions
t_{CSS}	CS Setup from DS falling	0			ns	
t_{RWS}	R/W Setup from DS falling	10			ns	
t_{ADS}	Address Setup from DS falling	2			ns	
t_{CSH}	CS Hold after DS rising	0			ns	
t_{RWH}	R/W Hold after DS Rising	2			ns	
t_{ADH}	Address Hold after DS Rising	2			ns	
t_{DDR}	Data Setup from DTA LOW on Read	2			ns	C_L = 150pF
t_{DHR}	Data Hold on Read	10		20	ns	C_L = 150pF, R_L = 1K
t_{DSW}	Data Setup on Write (Fast Write)	0	—		ns	
t_{SWD}	Valid Data Delay on Write (Slow Write)			122	ns	
t_{DHW}	Data Hold on Write	5			ns	
t_{AKD}	Acknowledgment Delay:					
	Reading/Writing Registers			43/43	ns	C_L = 150pF
	Reading/Writing Memory			760/750	ns	C_L = 150pF
t_{AKH}(1)	Acknowledgment Hold Time			22	ns	C_L = 150pF, R_L = 1K

NOTE:
1. High Impedance is measured by pulling to the appropriate rail with R_L, with timing corrected to cancel time taken to discharge C_L.

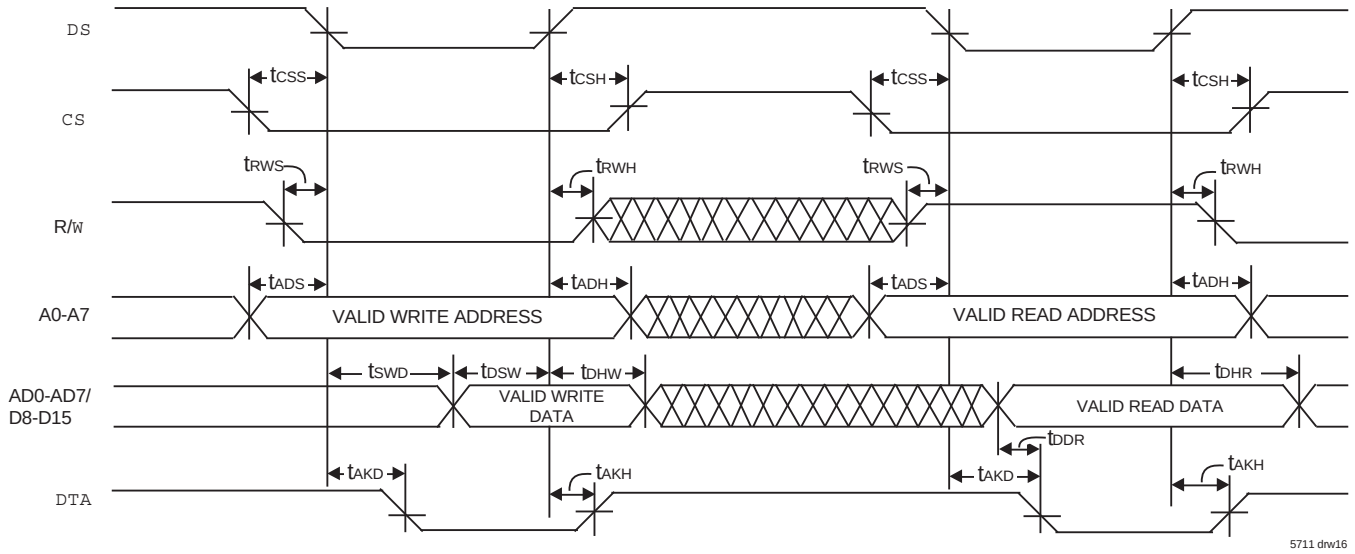

Figure 13. Motorola Non-Multiplexed Asyncrounous Bus Timing

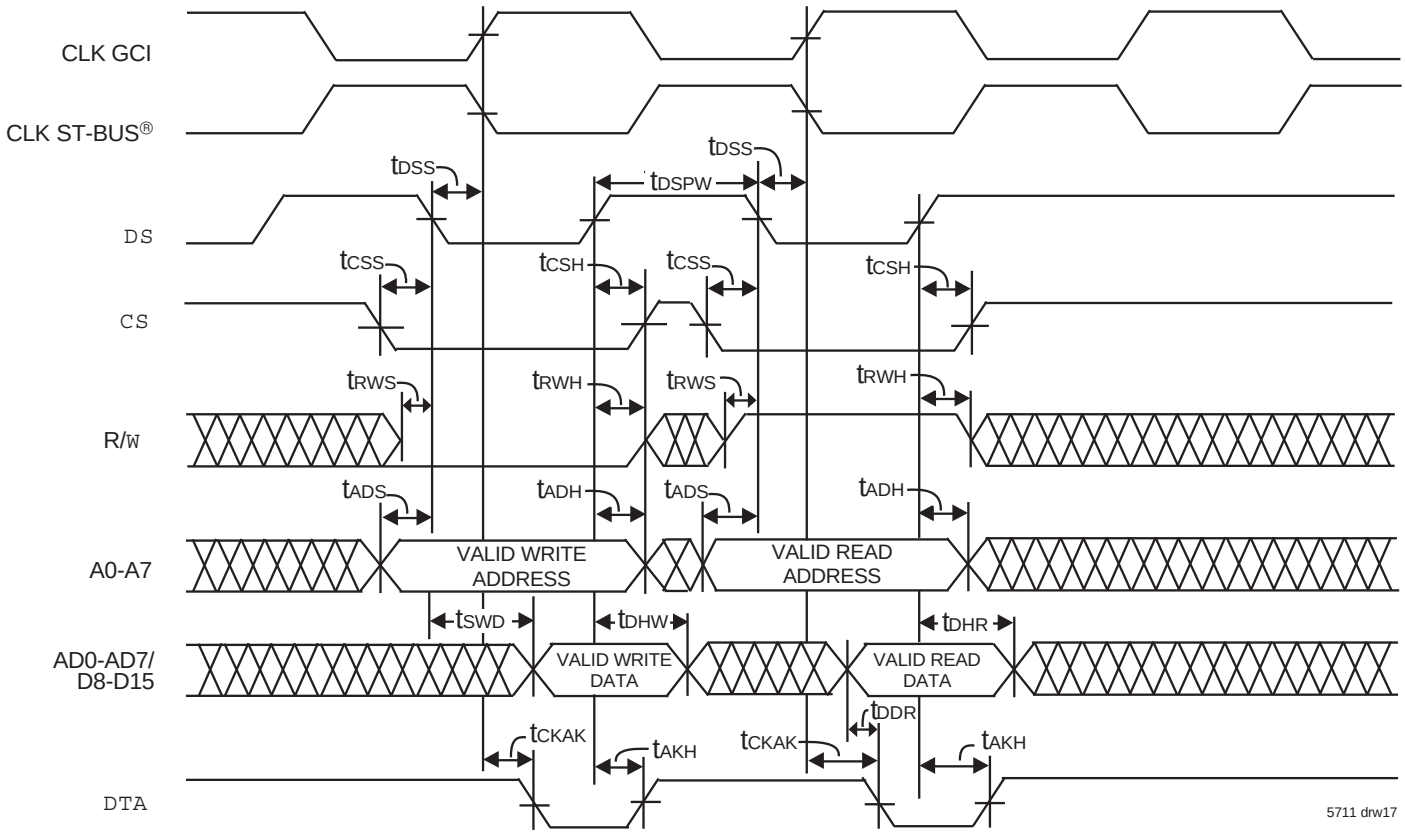

Figure 14. Motorola Non-Multiplexed Syncrounous Bus Timing

ORDERING INFORMATION

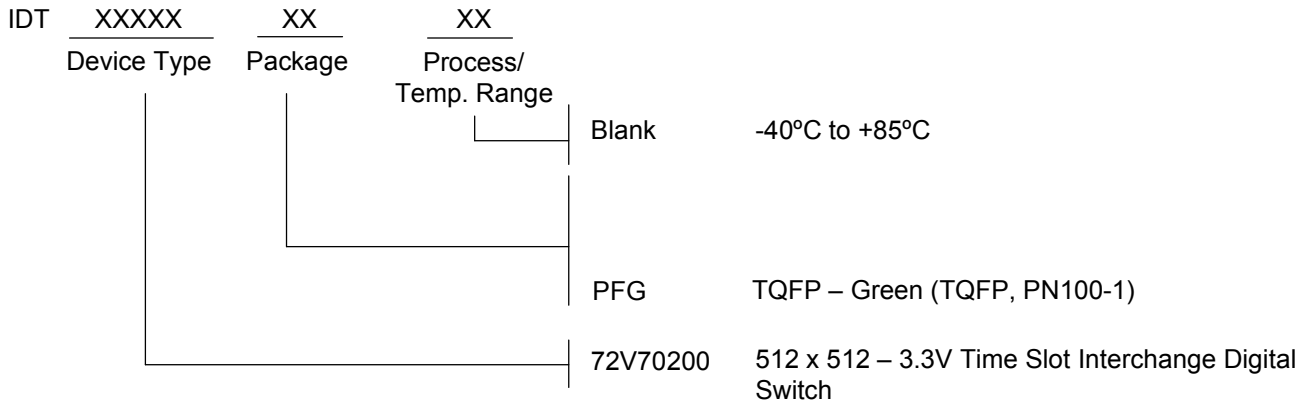

DATASHEET DOCUMENT HISTORY

5/19/2000	pgs. 1, 3, 17 and 23.
8/15/2000	pgs. 1, 2, 3, 5, 12 and 23.
9/22/2000	pgs. 3, 12 and 17.
1/04/2001	pgs. 6, 11, 17, 19, 20, 21 and 22.
1/25/2001	pgs. 17 and 22.
08/06/2001	pgs. 4, 10, 15, and 22.
12/16/14	Pg 1 and 24 removed JG, BGG and PQFG packages.

CORPORATE HEADQUARTER
2975 Stender Way
Santa Clara, CA 95054

for SALES:
800-345-7015 or 408-727-6116
fax: 408-492-8674
www.idt.com

for Tech Support:
408-330-1753
email: FIFOhelp@idt.com

OCEAN CHIPS
Океан Электроники
Поставка электронных компонентов

Компания «Океан Электроники» предлагает заключение долгосрочных отношений при поставках импортных электронных компонентов на взаимовыгодных условиях!

Наши преимущества:

- Поставка оригинальных импортных электронных компонентов напрямую с производств Америки, Европы и Азии, а так же с крупнейших складов мира;
- Широкая линейка поставок активных и пассивных импортных электронных компонентов (более 30 млн. наименований);
- Поставка сложных, дефицитных, либо снятых с производства позиций;
- Оперативные сроки поставки под заказ (от 5 рабочих дней);
- Экспресс доставка в любую точку России;
- Помощь Конструкторского Отдела и консультации квалифицированных инженеров;
- Техническая поддержка проекта, помощь в подборе аналогов, поставка прототипов;
- Поставка электронных компонентов под контролем ВП;
- Система менеджмента качества сертифицирована по Международному стандарту ISO 9001;
- При необходимости вся продукция военного и аэрокосмического назначения проходит испытания и сертификацию в лаборатории (по согласованию с заказчиком);
- Поставка специализированных компонентов военного и аэрокосмического уровня качества (Xilinx, Altera, Analog Devices, Intersil, Interpoint, Microsemi, Actel, Aeroflex, Peregrine, VPT, Syfer, Eurofarad, Texas Instruments, MS Kennedy, Miteq, Cobham, E2V, MA-COM, Hittite, Mini-Circuits, General Dynamics и др.);

Компания «Океан Электроники» является официальным дистрибьютором и эксклюзивным представителем в России одного из крупнейших производителей разъемов военного и аэрокосмического назначения **«JONHON»**, а так же официальным дистрибьютором и эксклюзивным представителем в России производителя высокотехнологичных и надежных решений для передачи СВЧ сигналов **«FORSTAR»**.

AVIC JONHON

«JONHON» (основан в 1970 г.)

Разъемы специального, военного и аэрокосмического назначения:

(Применяются в военной, авиационной, аэрокосмической, морской, железнодорожной, горно- и нефтедобывающей отраслях промышленности)

«FORSTAR» (основан в 1998 г.)

ВЧ соединители, коаксиальные кабели, кабельные сборки и микроволновые компоненты:

(Применяются в телекоммуникациях гражданского и специального назначения, в средствах связи, РЛС, а так же военной, авиационной и аэрокосмической отраслях промышленности).

FORSTAR®

Телефон: 8 (812) 309-75-97 (многоканальный)
Факс: 8 (812) 320-03-32
Электронная почта: ocean@oceanchips.ru
Web: http://oceanchips.ru/
Адрес: 198099, г. Санкт-Петербург, ул. Калинина, д. 2, корп. 4, лит. А