RoHS

Sxx08xSx & Sxx08x Series

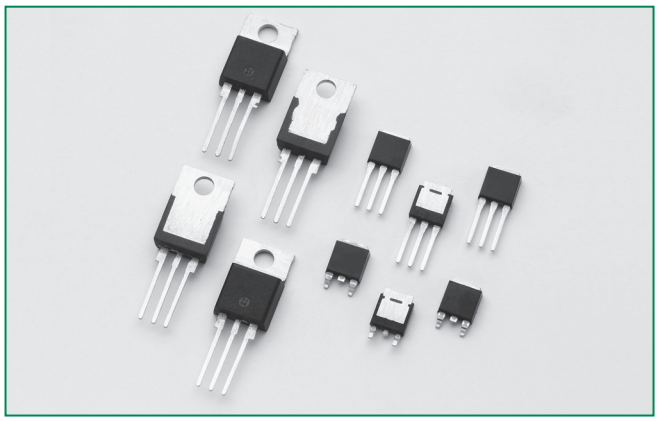

Agency Approval

Agency	Agency File Number
	L Package: E71639

Main Features

Symbol	Value	Unit
$I_{T(RMS)}$	8	A
V_{DRM}/V_{RRM}	400 to 1000	V
I_{GT}	0.2 to 15	mA

Description

Excellent unidirectional switches for phase control applications such as heating and motor speed controls.

Sensitive gate SCRs are easily triggered with microAmps of current as furnished by sense coils, proximity switches, and microprocessors.

Standard phase control SCRs are triggered with few milliamperes of current at less than 1.5V potential.

Features & Benefits

- RoHS compliant
- Glass – passivated junctions
- Voltage capability up to 1000 V
- Surge capability up to 100 A

Applications

Typical applications are capacitive discharge systems for strobe lights, nailers, staplers and gas engine ignition. Also controls for power tools, home/brown goods and white goods appliances.

Internally constructed isolated packages are offered for ease of heat sinking with highest isolation voltage.

Schematic Symbol

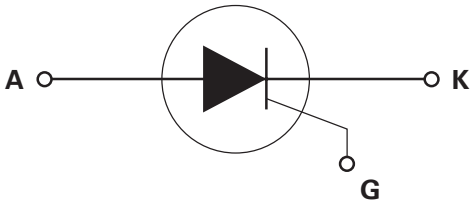

©2011 Littelfuse, Inc
Specifications are subject to change without notice.
Please refer to http://www.littelfuse.com for current information.

Absolute Maximum Ratings — Sensitive SCRs

Symbol	Parameter	Test Conditions		Value	Unit
$I_{T(RMS)}$	RMS on-state current	Sxx08LSy	T_C = 80°C	8	A
		Sxx08RSy Sxx08DSy Sxx08VSy	T_C = 95°C		
$I_{T(AV)}$	Average on-state current	Sxx08LSy	T_C = 80°C	5.1	A
		Sxx08RSy Sxx08DSy Sxx08VSy	T_C = 95°C		
I_{TSM}	Peak non-repetitive surge current	single half cycle; f = 50Hz; T_J (initial) = 25°C		83	A
		single half cycle; f = 60Hz; T_J (initial) = 25°C		100	
I^2t	I^2t Value for fusing	t_p = 8.3 ms		41	A^2s
di/dt	Critical rate of rise of on-state current	f = 60 Hz ; T_J = 110°C		70	A/µs
I_{GTM}	Peak gate current	T_J = 110°C		1.6	A
$P_{G(AV)}$	Average gate power dissipation	T_J = 110°C		0.4	W
T_{stg}	Storage temperature range			-40 to 150	°C
T_J	Operating junction temperature range			-40 to 110	°C

Note: xx = voltage, y = sensitivity

Absolute Maximum Ratings — Standard SCRs

Symbol	Parameter	Test Conditions		Value	Unit
$I_{T(RMS)}$	RMS on-state current	Sxx08L	T_C = 100°C	8	A
		Sxx08R Sxx08D Sxx08V	T_C = 110°C		
$I_{T(AV)}$	Average on-state current	Sxx08L	T_C = 100°C	5.1	A
		Sxx08R Sxx08D Sxx08V	T_C = 110°C		
I_{TSM}	Peak non-repetitive surge current	single half cycle; f = 50Hz; T_J (initial) = 25°C		83	A
		single half cycle; f = 60Hz; T_J (initial) = 25°C		100	
I^2t	I^2t Value for fusing	t_p = 8.3 ms		41	A^2s
di/dt	Critical rate-of-rise of on-state current	f = 60 Hz T_J = 125°C		100	A/µs
I_{GM}	Peak gate current	T_J = 125°C		2	A
$P_{G(AV)}$	Average gate power dissipation	T_J = 125°C		0.5	W
T_{stg}	Storage temperature range			-40 to 150	°C
T_J	Operating junction temperature range			-40 to 125	°C

Note: xx = voltage

©2011 Littelfuse, Inc
Specifications are subject to change without notice.
Please refer to http://www.littelfuse.com for current information.

Electrical Characteristics (T_J = 25°C, unless otherwise specified) – Sensitive SCRs

Symbol	Test Conditions		Value		Unit
			Sxx08xS2	Sxx08xS3	
I_{GT}	V_D = 6V R_L = 100 Ω	MAX.	200	500	µA
V_{GT}		MAX.	0.8		V
dv/dt	$V_D = V_{DRM}$; R_{GK} = 1kΩ; T_J = 110°C	TYP.	8		V/µs
V_{GD}	$V_D = V_{DRM}$ R_L = 3.3 kΩ T_J = 110°C	MIN.	0.2		V
V_{GRM}	I_{GR} = 10µA	MIN.	6		V
I_H	I_T = 20mA (initial)	MAX.	6	8	mA
t_q	I_T=2A; t_p=50µs; dv/dt=5V/µs; di/dt=-30A/µs	MAX.	50	45	µs
t_{gt}	I_G = 2 x I_{GT} PW = 15µs I_T = 12A	TYP.	4	5	µs

Note: xx = voltage x = package

Electrical Characteristics (T_J = 25°C, unless otherwise specified) – Standard SCRs

Symbol	Test Conditions			Value	Unit
				Sxx08x	
I_{GT}	V_D = 12V R_L = 60 Ω		MAX.	15	mA
V_{GT}			MAX.	1.5	V
dv/dt	$V_D = V_{DRM}$; gate open; T_J = 100°C	400V	MIN.	350	V/µs
		600V		300	
		800V		250	
		1000V		100	
	$V_D = V_{DRM}$; gate open; T_J = 125°C	400V		250	
		600V		225	
		800V		200	
V_{GD}	$V_D = V_{DRM}$ R_L = 3.3 kΩ T_J = 125°C		MIN.	0.2	V
I_H	I_T = 200mA (initial)		MAX.	30	mA
t_q	I_T=2A; t_p=50µs; dv/dt=5V/µs; di/dt=-30A/µs		MAX.	35	µs
t_{gt}	I_G = 2 x I_{GT} PW = 15µs I_T = 16A		TYP.	2	µs

Note: xx = voltage x = package

Static Characteristics

Symbol	Test Conditions					Value	Unit
V_{TM}	I_T = 16A; t_p = 380 µs				MAX.	1.6	V
I_{DRM} / I_{RRM}	$V_{DRM} = V_{RRM}$	Sxx08xyy	T_J = 25°C	400 - 600V	MAX.	5	µA
			T_J = 110°C	400 - 600V		250	
		Sxx08x	T_J = 25°C	400 - 800V		10	
				1000V		20	
			T_J = 100°C	400 - 800V		200	
				1000V		3000	
			T_J = 125°C	400 - 800V		500	

Note: xx = voltage, x = package, yy = sensitivity

©2011 Littelfuse, Inc
Specifications are subject to change without notice.
Please refer to http://www.littelfuse.com for current information.

Thermal Resistances

Symbol	Parameter		Value	Unit
$R_{\theta(J-C)}$	Junction to case (AC)	Sxx08RSy	1.8	°C/W
		Sxx08LSy	3.4	
		Sxx08VSy	2.1	
		Sxx08DSy	1.5	
		Sxx08R	1.8	
		Sxx08L	3.4	
		Sxx08V	2.0	
		Sxx08D	1.5	
$R_{\theta(J-A)}$	Junction to ambient	Sxx08RSy	40	°C/W
		Sxx08LSy	65	
		Sxx08VSy	85	
		Sxx08R	40	
		Sxx08L	50	
		Sxx08V	70	

Note: xx = voltage, y = sensitivity

Figure 1: Normalized DC Gate Trigger Current vs. Junction Temperature (Sensitive SCR)

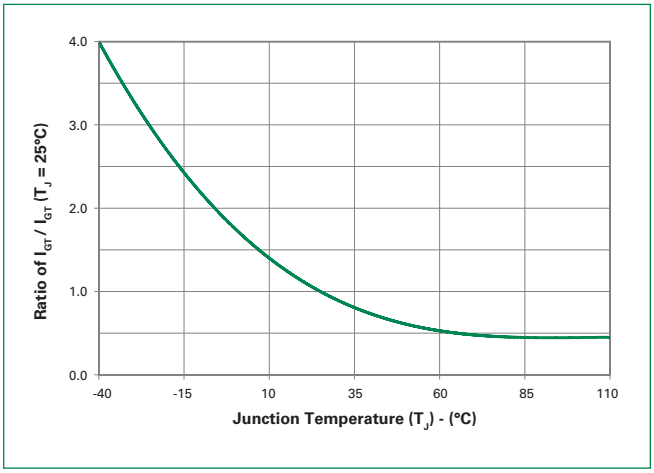

Figure 2: Normalized DC Gate Trigger Current vs. Junction Temperature (Standard SCR)

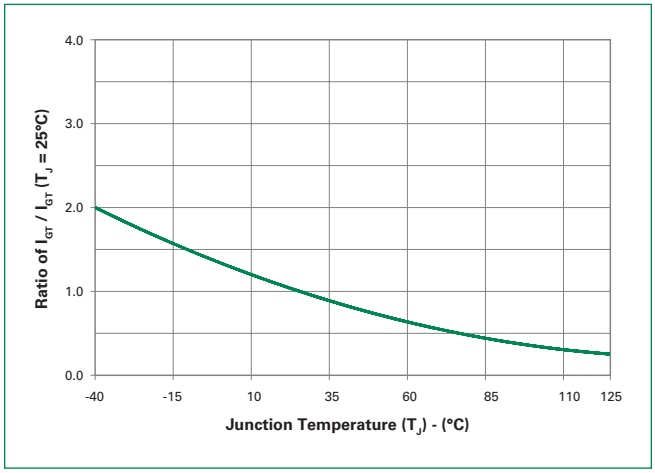

©2011 Littelfuse, Inc
Specifications are subject to change without notice.
Please refer to http://www.littelfuse.com for current information.

Figure 3: Normalized DC Gate Trigger Voltage vs. Junction Temperature

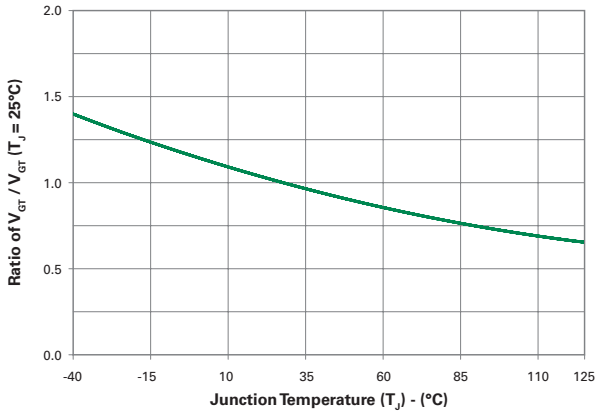

Figure 4: Normalized DC Holding Current vs. Junction Temperature

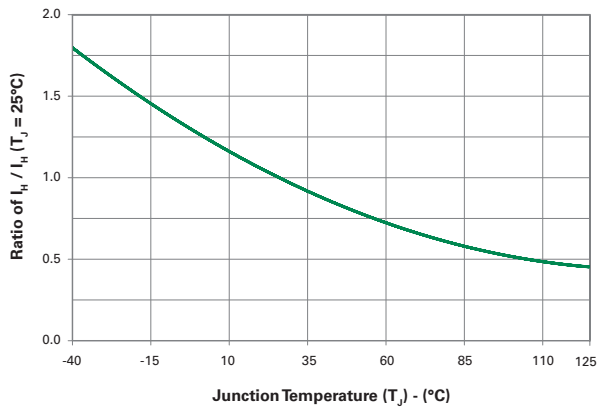

Figure 5: On-State Current vs. On-State Voltage (Typical)

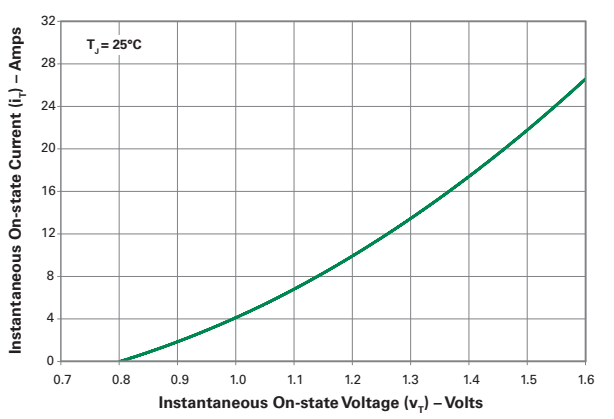

Figure 6: Power Dissipation (Typical) vs. RMS On-State Current

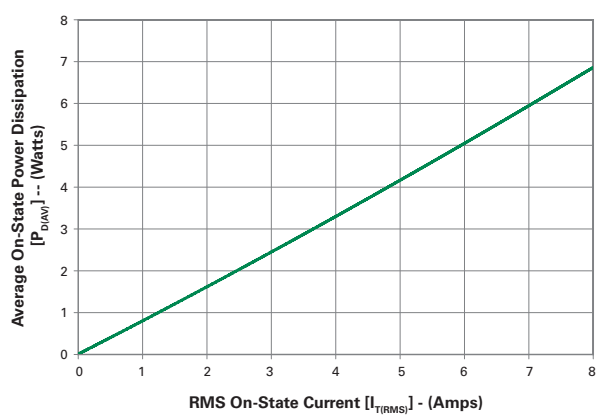

Figure 7: Maximum Allowable Case Temperature vs. RMS On-State Current

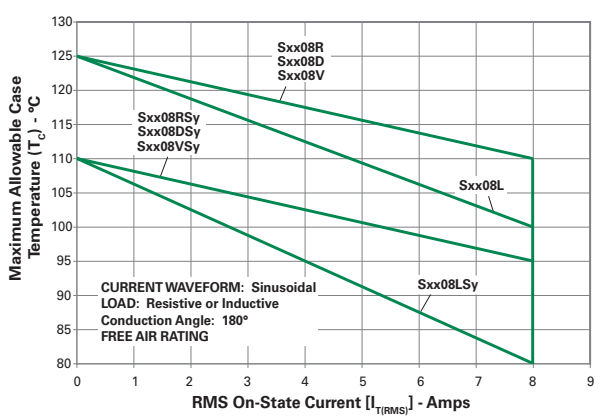

Figure 8: Maximum Allowable Case Temperature vs. Average On-State Current

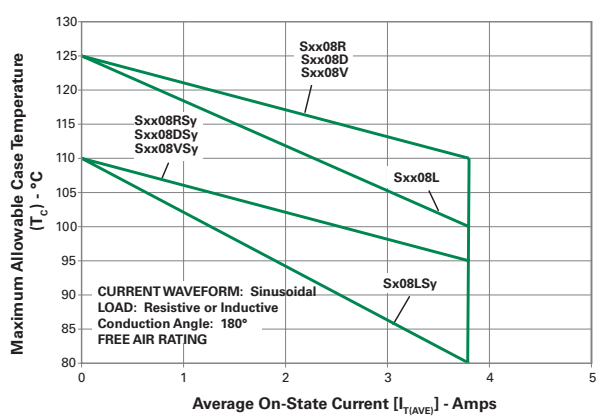

©2011 Littelfuse, Inc
Specifications are subject to change without notice.
Please refer to http://www.littelfuse.com for current information.

Figure 9: Maximum Allowable Ambient Temperature vs. RMS On-State Current

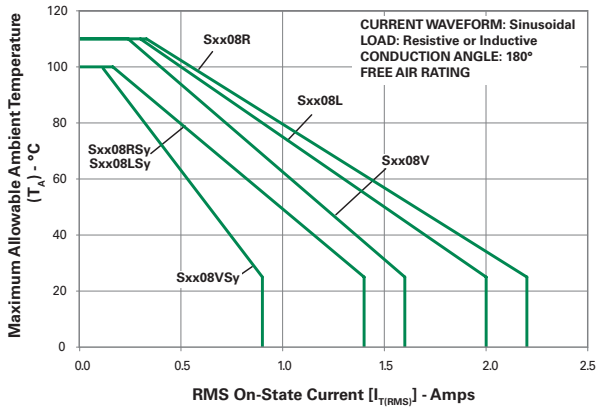

Figure 10: Maximum Allowable Ambient Temperature vs. Average On-State Current

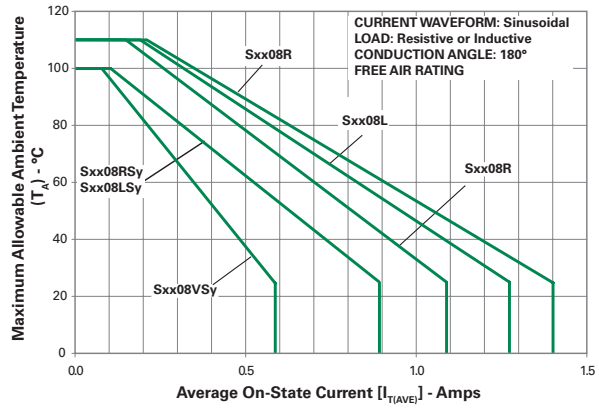

Note: xx = voltage, y = sensitivity

Figure 11: Peak Capacitor Discharge Current

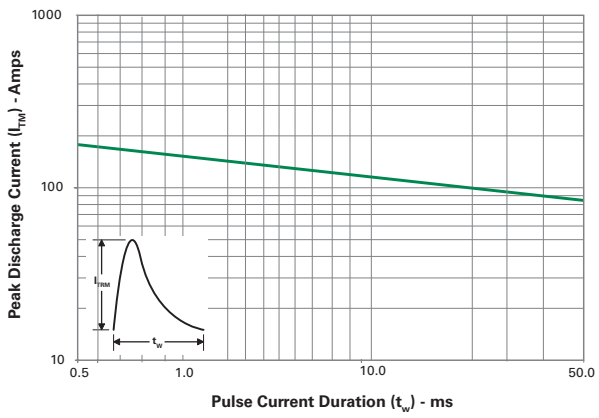

Figure 12: Peak Capacitor Discharge Current Derating

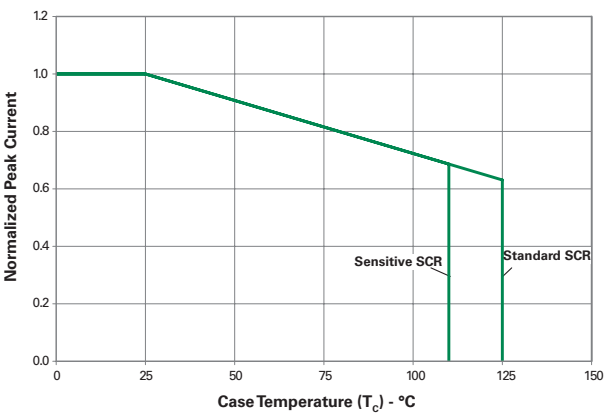

Figure 13: Surge Peak On-State Current vs. Number of Cycles

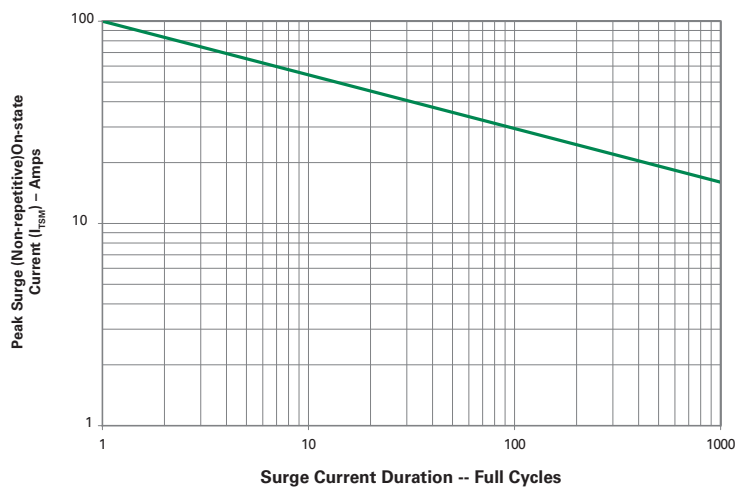

SUPPLY FREQUENCY: 60 Hz Sinusoidal
LOAD: Resistive
RMS On-State Current: [$I_{T(RMS)}$]: Maximum Rated Value at Specified Case Temperature

Notes:
1. Gate control may be lost during and immediately following surge current interval.
2. Overload may not be repeated until junction temperature has returned to steady-state rated value.

©2011 Littelfuse, Inc
Specifications are subject to change without notice.
Please refer to http://www.littelfuse.com for current information.

Soldering Parameters

Reflow Condition		Pb – Free assembly
Pre Heat	-Temperature Min ($T_{s(min)}$)	150°C
	-Temperature Max ($T_{s(max)}$)	200°C
	-Time (min to max) (t_s)	60 – 180 secs
Average ramp up rate (Liquidus Temp) (T_L) to peak		5°C/second max
$T_{S(max)}$ to T_L - Ramp-up Rate		5°C/second max
Reflow	-Temperature (T_L) (Liquidus)	217°C
	-Temperature (t_L)	60 – 150 seconds
Peak Temperature (T_P)		$260^{+0/-5}$ °C
Time within 5°C of actual peak Temperature (t_p)		20 – 40 seconds
Ramp-down Rate		5°C/second max
Time 25°C to peak Temperature (T_P)		8 minutes Max.
Do not exceed		280°C

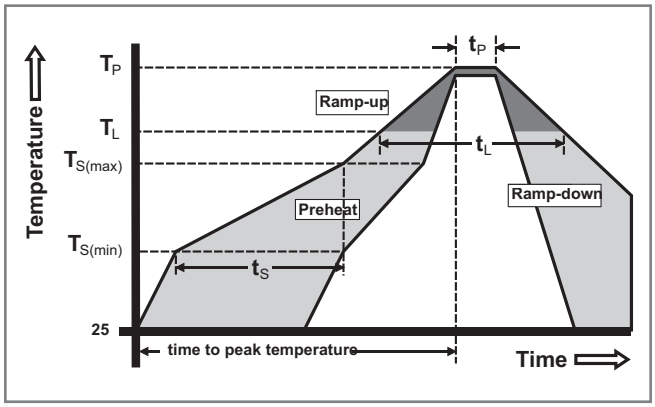

Physical Specifications

Terminal Finish	100% Matte Tin-plated
Body Material	UL recognized epoxy meeting flammability classification 94V-0
Lead Material	Copper Alloy

Design Considerations

Careful selection of the correct device for the application's operating parameters and environment will go a long way toward extending the operating life of the Thyristor. Good design practice should limit the maximum continuous current through the main terminals to 75% of the device rating. Other ways to ensure long life for a power discrete semiconductor are proper heat sinking and selection of voltage ratings for worst case conditions. Overheating, overvoltage (including dv/dt), and surge currents are the main killers of semiconductors. Correct mounting, soldering, and forming of the leads also help protect against component damage.

Environmental Specifications

Test	Specifications and Conditions
AC Blocking	MIL-STD-750, M-1040, Cond A Applied Peak AC voltage @ 125°C for 1008 hours
Temperature Cycling	MIL-STD-750, M-1051, 100 cycles; -40°C to +150°C; 15-min dwell-time
Temperature/ Humidity	EIA / JEDEC, JESD22-A101 1008 hours; 320V - DC: 85°C; 85% rel humidity
High Temp Storage	MIL-STD-750, M-1031, 1008 hours; 150°C
Low-Temp Storage	1008 hours; -40°C
Thermal Shock	MIL-STD-750, M-1056 10 cycles; 0°C to 100°C; 5-min dwell-time at each temperature; 10 sec (max) transfer time between temperature
Autoclave	EIA / JEDEC, JESD22-A102 168 hours (121°C at 2 ATMs) and 100% R/H
Resistance to Solder Heat	MIL-STD-750 Method 2031
Solderability	ANSI/J-STD-002, category 3, Test A
Lead Bend	MIL-STD-750, M-2036 Cond E

©2011 Littelfuse, Inc
Specifications are subject to change without notice.
Please refer to http://www.littelfuse.com for current information.

Dimensions — TO-220AB (R-Package) — Non-Isolated Mounting Tab Common with Center Lead

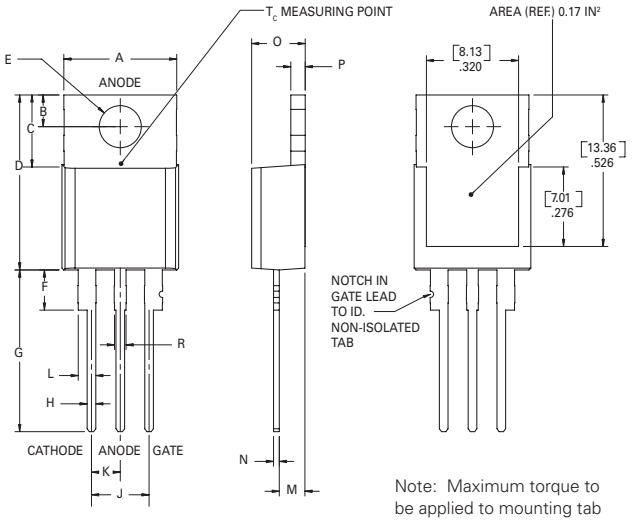

Note: Maximum torque to be applied to mounting tab is 8 in-lbs. (0.904 Nm).

Dimension	Inches		Millimeters	
	Min	Max	Min	Max
A	0.380	0.420	9.65	10.67
B	0.105	0.115	2.67	2.92
C	0.230	0.250	5.84	6.35
D	0.590	0.620	14.99	15.75
E	0.142	0.147	3.61	3.73
F	0.110	0.130	2.79	3.30
G	0.540	0.575	13.72	14.61
H	0.025	0.035	0.64	0.89
J	0.195	0.205	4.95	5.21
K	0.095	0.105	2.41	2.67
L	0.060	0.075	1.52	1.91
M	0.085	0.095	2.16	2.41
N	0.018	0.024	0.46	0.61
O	0.178	0.188	4.52	4.78
P	0.045	0.060	1.14	1.52
R	0.038	0.048	0.97	1.22

Dimensions — TO-220AB (L-Package) — Isolated Mounting Tab

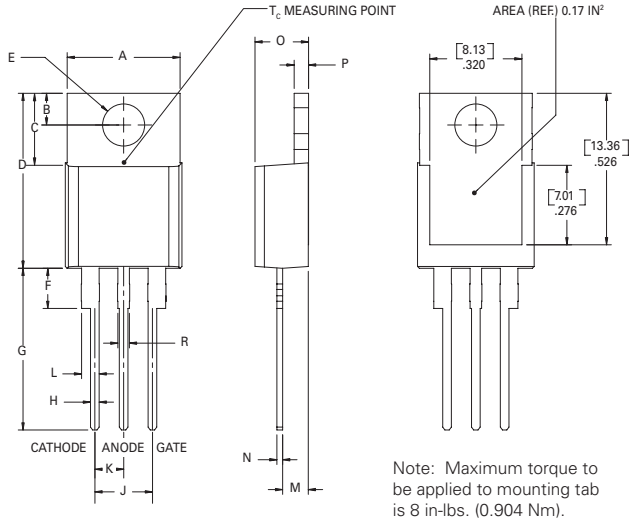

Note: Maximum torque to be applied to mounting tab is 8 in-lbs. (0.904 Nm).

Dimension	Inches		Millimeters	
	Min	Max	Min	Max
A	0.380	0.420	9.65	10.67
B	0.105	0.115	2.67	2.92
C	0.230	0.250	5.84	6.35
D	0.590	0.620	14.99	15.75
E	0.142	0.147	3.61	3.73
F	0.110	0.130	2.79	3.30
G	0.540	0.575	13.72	14.61
H	0.025	0.035	0.64	0.89
J	0.195	0.205	4.95	5.21
K	0.095	0.105	2.41	2.67
L	0.060	0.075	1.52	1.91
M	0.085	0.095	2.16	2.41
N	0.018	0.024	0.46	0.61
O	0.178	0.188	4.52	4.78
P	0.045	0.060	1.14	1.52
R	0.038	0.048	0.97	1.22

©2011 Littelfuse, Inc
Specifications are subject to change without notice.
Please refer to http://www.littelfuse.com for current information.

Dimensions — TO-251AA (V/I-Package) — V/I-PAK Through Hole

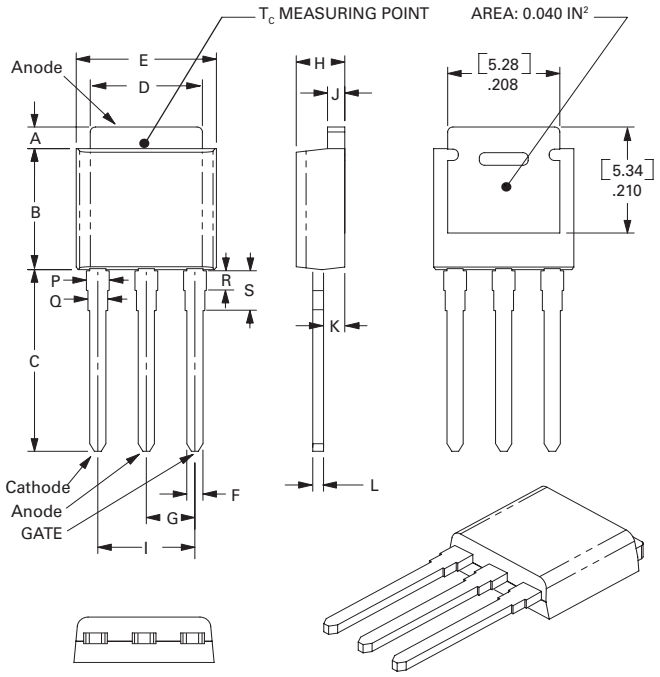

Dimension	Inches			Millimeters		
	Min	Typ	Max	Min	Typ	Max
A	0.040	0.044	0.050	1.02	1.11	1.27
B	0.235	0.242	0.245	5.97	6.15	6.22
C	0.350	0.361	0.375	8.89	9.18	9.53
D	0.205	0.208	0.213	5.21	5.29	5.41
E	0.255	0.262	0.265	6.48	6.66	6.73
F	0.027	0.031	0.033	0.69	0.80	0.84
G	0.087	0.090	0.093	2.21	2.28	2.36
H	0.085	0.092	0.095	2.16	2.34	2.41
I	0.176	0.180	0.184	4.47	4.57	4.67
J	0.018	0.020	0.023	0.46	0.51	0.58
K	0.038	0.040	0.044	0.97	1.01	1.12
L	0.018	0.020	0.023	0.46	0.52	0.58
P	0.042	0.047	0.052	1.06	1.20	1.32
Q	0.034	0.039	0.044	0.86	1.00	1.11
R	0.034	0.039	0.044	0.86	1.00	1.11
S	0.074	0.079	0.084	1.86	2.00	2.11

Dimensions — TO-252AA (D-Package) — D-PAK Surface Mount

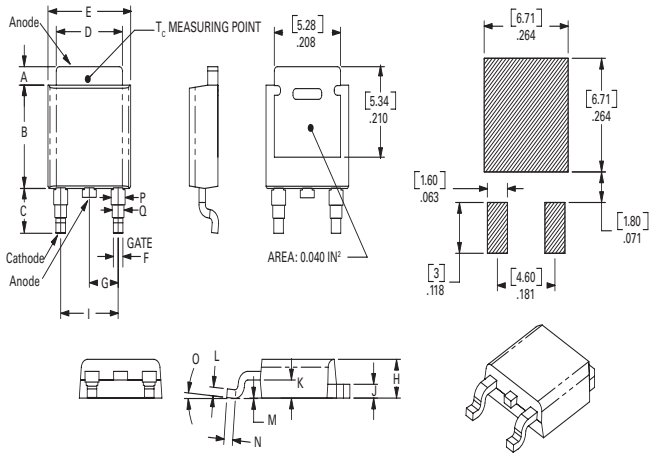

Dimension	Inches			Millimeters		
	Min	Typ	Max	Min	Typ	Max
A	0.040	0.043	0.050	1.02	1.09	1.27
B	0.235	0.243	0.245	5.97	6.16	6.22
C	0.106	0.108	0.113	2.69	2.74	2.87
D	0.205	0.208	0.213	5.21	5.29	5.41
E	0.255	0.262	0.265	6.48	6.65	6.73
F	0.027	0.031	0.033	0.69	0.80	0.84
G	0.087	0.090	0.093	2.21	2.28	2.36
H	0.085	0.092	0.095	2.16	2.33	2.41
I	0.176	0.179	0.184	4.47	4.55	4.67
J	0.018	0.020	0.023	0.46	0.51	0.58
K	0.038	0.040	0.044	0.97	1.02	1.12
L	0.018	0.020	0.023	0.46	0.51	0.58
M	0.000	0.000	0.004	0.00	0.00	0.10
N	0.021	0.026	0.027	0.53	0.67	0.69
O	0°	0°	5°	0°	0°	5°
P	0.042	0.047	0.052	1.06	1.20	1.32
Q	0.034	0.039	0.044	0.86	1.00	1.11

©2011 Littelfuse, Inc
Specifications are subject to change without notice.
Please refer to http://www.littelfuse.com for current information.

Product Selector

Part Number	Voltage				Gate Sensitivity	Type	Package
	400V	600V	800V	1000V			
Sxx08RS2	X	X			0.2mA	Sensitive SCR	TO-220R
Sxx08LS2	X	X			0.2mA	Sensitive SCR	TO-220L
Sxx08VS2	X	X			0.2mA	Sensitive SCR	TO-251
Sxx08DS2	X	X			0.2mA	Sensitive SCR	TO-252
Sxx08RS3	X	X			0.5mA	Sensitive SCR	TO-220R
Sxx08LS3	X	X			0.5mA	Sensitive SCR	TO-220L
Sxx08VS3	X	X			0.5mA	Sensitive SCR	TO-251
Sxx08DS3	X	X			0.5mA	Sensitive SCR	TO-252
Sxx08R	X	X	X	X	15mA	Standard SCR	TO-220R
Sxx08L	X	X	X	X	15mA	Standard SCR	TO-220L
Sxx08V	X	X	X	X	15mA	Standard SCR	TO-251
Sxx08D	X	X	X	X	15mA	Standard SCR	TO-252

Note: xx = Voltage

Packing Options

Part Number	Marking	Weight	Packing Mode	Base Quantity
Sxx08L/Ryy	Sxx08L/Ryy	2.2 g	Bulk	500
Sxx08L/RyyTP	Sxx08L/Ryy	2.2 g	Tube	500 (50 per tube)
Sxx08DyyTP	Sxx08Dyy	0.3 g	Tube	750 (75 per tube)
Sxx08DyyRP	Sxx08Dyy	0.3 g	Embossed Carrier	2500
Sxx08VyyTP	Sxx08Vyy	0.4 g	Tube	750 (75 per tube)
Sxx08L/R	Sxx08L/R	2.2 g	Bulk	500
Sxx08L/RTP	Sxx08L/R	2.2 g	Tube	500 (50 per tube)
Sxx08DTP	Sxx08D	0.3 g	Tube	750 (75 per tube)
Sxx08DRP	Sxx08D	0.3 g	Embossed Carrier	2500
Sxx08VTP	Sxx08V	0.4 g	Tube	750 (75 per tube)

Note: xx = Voltage; yy = Sensitivity

©2011 Littelfuse, Inc
Specifications are subject to change without notice.
Please refer to http://www.littelfuse.com for current information.

TO-252 Embossed Carrier Reel Pack (RP) Specifications

Meets all EIA-481-2 Standards

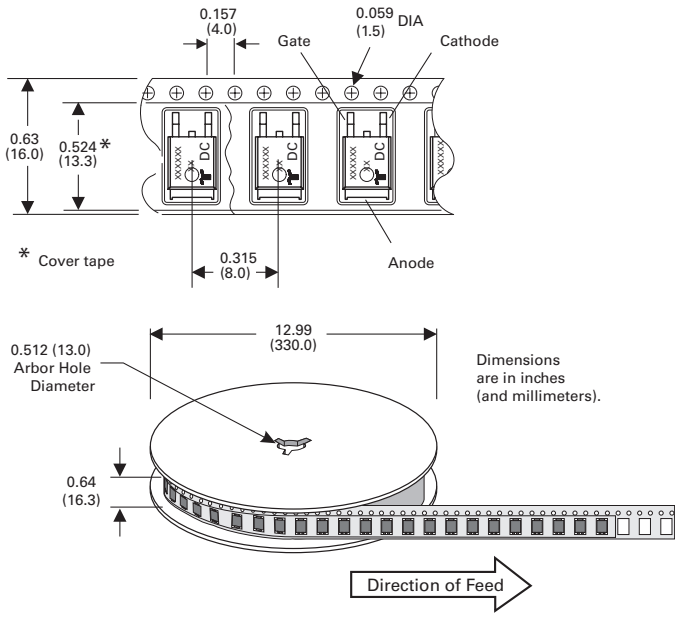

Part Numbering System

S 60 08 L S2 56

DEVICE TYPE
S: SCR

VOLTAGE RATING
40: 400V
60: 600V
80: 800V
K0: 1000V

CURRENT RATING
08: 8A

PACKAGE TYPE
L: TO-220 Isolated
R: TO-220 Non-Isolated
V: TO-251 (V/I-Pak)
D: TO-252 (D-Pak)

SENSITIVITY & TYPE
Sensitive SCR:
S2: 200µA
S3: 500µA
Standard SCR:
(blank): 15mA

LEAD FORM DIMENSIONS
xx: Lead Form Option

Part Marking System

TO-220 AB – (R Package)

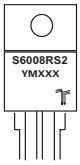

TO-220 AB – (L Package)

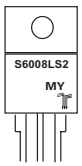

TO-251AA – (V Package)
TO-252AA – (D Package)

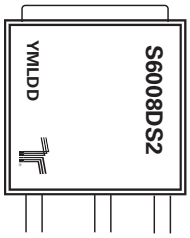

©2011 Littelfuse, Inc
Specifications are subject to change without notice.
Please refer to http://www.littelfuse.com for current information.

OCEAN CHIPS
Океан Электроники
Поставка электронных компонентов

Компания «Океан Электроники» предлагает заключение долгосрочных отношений при поставках импортных электронных компонентов на взаимовыгодных условиях!

Наши преимущества:

- Поставка оригинальных импортных электронных компонентов напрямую с производств Америки, Европы и Азии, а так же с крупнейших складов мира;
- Широкая линейка поставок активных и пассивных импортных электронных компонентов (более 30 млн. наименований);
- Поставка сложных, дефицитных, либо снятых с производства позиций;
- Оперативные сроки поставки под заказ (от 5 рабочих дней);
- Экспресс доставка в любую точку России;
- Помощь Конструкторского Отдела и консультации квалифицированных инженеров;
- Техническая поддержка проекта, помощь в подборе аналогов, поставка прототипов;
- Поставка электронных компонентов под контролем ВП;
- Система менеджмента качества сертифицирована по Международному стандарту ISO 9001;
- При необходимости вся продукция военного и аэрокосмического назначения проходит испытания и сертификацию в лаборатории (по согласованию с заказчиком);
- Поставка специализированных компонентов военного и аэрокосмического уровня качества (Xilinx, Altera, Analog Devices, Intersil, Interpoint, Microsemi, Actel, Aeroflex, Peregrine, VPT, Syfer, Eurofarad, Texas Instruments, MS Kennedy, Miteq, Cobham, E2V, MA-COM, Hittite, Mini-Circuits, General Dynamics и др.);

Компания «Океан Электроники» является официальным дистрибьютором и эксклюзивным представителем в России одного из крупнейших производителей разъемов военного и аэрокосмического назначения **«JONHON»**, а так же официальным дистрибьютором и эксклюзивным представителем в России производителя высокотехнологичных и надежных решений для передачи СВЧ сигналов **«FORSTAR»**.

AVIC JONHON

«JONHON» (основан в 1970 г.)

Разъемы специального, военного и аэрокосмического назначения:

(Применяются в военной, авиационной, аэрокосмической, морской, железнодорожной, горно- и нефтедобывающей отраслях промышленности)

«FORSTAR» (основан в 1998 г.)

ВЧ соединители, коаксиальные кабели, кабельные сборки и микроволновые компоненты:

(Применяются в телекоммуникациях гражданского и специального назначения, в средствах связи, РЛС, а так же военной, авиационной и аэрокосмической отраслях промышленности).

FORSTAR®

Телефон: 8 (812) 309-75-97 (многоканальный)
Факс: 8 (812) 320-03-32
Электронная почта: ocean@oceanchips.ru
Web: http://oceanchips.ru/
Адрес: 198099, г. Санкт-Петербург, ул. Калинина, д. 2, корп. 4, лит. А