Quad Precision Op Amp (LT1014) Dual Precision Op Amp (LT1013)

FEATURES

- Single Supply Operation
  - Input Voltage Range Extends to Ground
  - Output Swings to Ground While Sinking Current
- Pin Compatible to 1458 and 324 with Precision Specs
- *Guaranteed* Offset Voltage: 150μV Max
- *Guaranteed* Low Drift: 2μV/°C Max
- *Guaranteed* Offset Current: 0.8nA Max
- *Guaranteed* High Gain
  - 5mA Load Current: 1.5 Million Min
  - 17mA Load Current: 0.8 Million Min
- *Guaranteed* Low Supply Current: 500μA Max
- Low Voltage Noise, 0.1Hz to 10Hz: $0.55\mu V_{P-P}$

Low Current Noise—Better than OP-07, $0.07pA/\sqrt{Hz}$

APPLICATIONS

- Battery-Powered Precision Instrumentation
  - Strain Gauge Signal Conditioners
  - Thermocouple Amplifiers
  - Instrumentation Amplifiers
- 4mA to 20mA Current Loop Transmitters
- Multiple Limit Threshold Detection
- Active Filters
- Multiple Gain Blocks

LT, LTC, LTM, Linear Technology and the Linear logo are registered trademarks of Linear Technology Corporation. All other trademarks are the property of their respective owners.

DESCRIPTION

The LT®1014 is the first precision quad operational amplifier which directly upgrades designs in the industry standard 14-pin DIP LM324/LM348/OP-11/4156 pin configuration. It is no longer necessary to compromise specifications, while saving board space and cost, as compared to single operational amplifiers.

The LT1014's low offset voltage of 50μV, drift of 0.3μV/°C, offset current of 0.15nA, gain of 8 million, common mode rejection of 117dB and power supply rejection of 120dB qualify it as four truly precision operational amplifiers. Particularly important is the low offset voltage, since no offset null terminals are provided in the quad configuration. Although supply current is only 350μA per amplifier, a new output stage design sources and sinks in excess of 20mA of load current, while retaining high voltage gain.

Similarly, the LT1013 is the first precision dual op amp in the 8-pin industry standard configuration, upgrading the performance of such popular devices as the MC1458/MC1558, LM158 and OP-221. The LT1013's specifications are similar to (even somewhat better than) the LT1014's.

Both the LT1013 and LT1014 can be operated off a single 5V power supply: input common mode range includes ground; the output can also swing to within a few millivolts of ground. Crossover distortion, so apparent on previous single-supply designs, is eliminated. A full set of specifications is provided with ±15V and single 5V supplies.

TYPICAL APPLICATION

3-Channel Thermocouple Thermometer

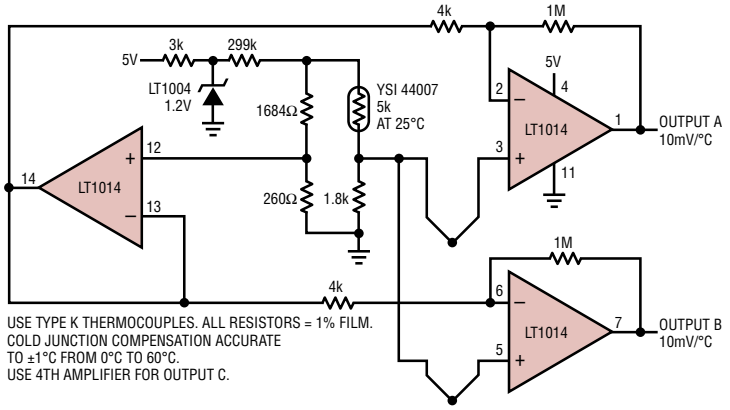

LT1014 Distribution of Offset Voltage

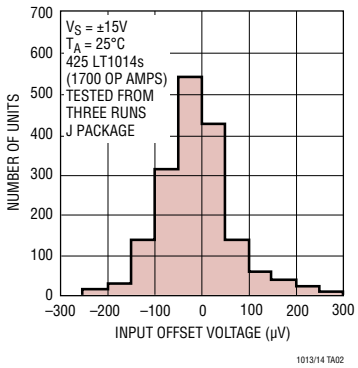

ABSOLUTE MAXIMUM RATINGS (Note 1)

Supply Voltage ..... ±22V
Differential Input Voltage..... ±30V
Input Voltage..... Equal to Positive Supply Voltage
..... 5V Below Negative Supply Voltage
Output Short-Circuit Duration ..... Indefinite
Storage Temperature Range
All Grades .....–65°C to 150°C

Lead Temperature (Soldering, 10 sec.) ..... 300°C
Operating Temperature Range
LT1013AM/LT1013M/
LT1014AM/LT1014M.....–55 °C to 125°C
LT1013AC/LT1013C/LT1013D
LT1014AC/LT1014C/LT1014D..... 0°C to 70°C
LT1013I/ LT1014I .....–40°C to 85°C

PIN CONFIGURATION

LT1013

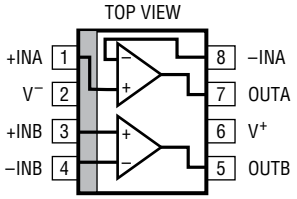

S8 PACKAGE
8-LEAD PLASTIC SO

NOTE: THIS PIN CONFIGURATION DIFFERS FROM THE STANDARD 8-PIN DUAL-IN-LINE CONFIGURATION

T_{JMAX} = 150°C, θ_{JA} = 190°C/W

LT1013

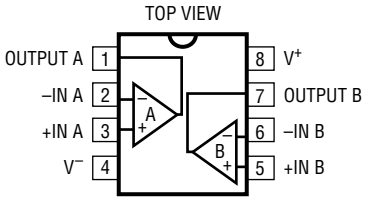

N8 PACKAGE
8-LEAD PDIP
T_{JMAX} = 150°C, θ_{JA} = 130°C

J8 PACKAGE
8-LEAD CERDIP
T_{JMAX} = 150°C, θ_{JA} = 100°C

OBSOLETE PACKAGE

Consider the N or S8 Packages for Alternate Source

LT1013

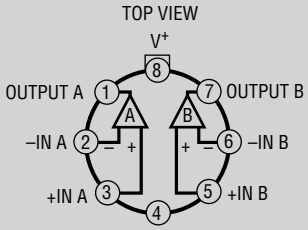

H PACKAGE
8-LEAD TO-5 METAL CAN

T_{JMAX} = 125°C, θ_{JA} = 55°C/W

OBSOLETE PACKAGE

Consider the N or S8 (Not N8) Packages for Alternate Source

LT1014

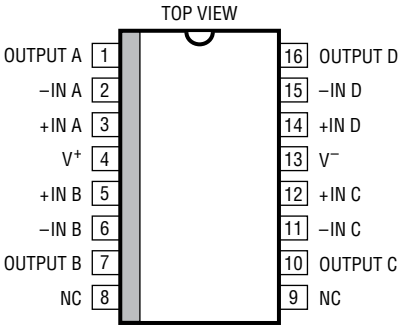

SW PACKAGE
16-LEAD PLASTIC SO

T_{JMAX} = 150°C, θ_{JA} = 130°C/W

LT1014

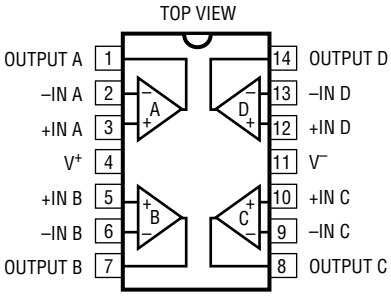

N PACKAGE
14-LEAD PDIP
T_{JMAX} = 150°C, θ_{JA} = 100°C

J PACKAGE
14-LEAD CERDIP
T_{JMAX} = 150°C, θ_{JA} = 100°C

OBSOLETE PACKAGE

Consider the N or SW Packages for Alternate Source

ORDER INFORMATION http://www.linear.com/product/LT1013#orderinfo

LEAD FREE FINISH	TAPE AND REEL	PART MARKING	PACKAGE DESCRIPTION	TEMPERATURE RANGE
LT1013DS8#PBF	LT1013DS8#TRPBF	1013	8-Lead Plastic SO	0°C to 70°C
LT1013IS8#PBF	LT1013IS8#TRPBF	1013I	8-Lead Plastic SO	–40°C to 85°C
LT1013ACN8#PBF	LT1013ACN8#TRPBF	LT1013ACN8	8-Lead PDIP	0°C to 70°C
LT1013CN8#PBF	LT1013CN8#TRPBF	LT1013CN8	8-Lead PDIP	0°C to 70°C
LT1013DN8#PBF	LT1013DN8#TRPBF	LT1013DN8	8-Lead PDIP	0°C to 70°C
LT1013IN8#PBF	LT1013IN8#TRPBF	LT1013IN8	8-Lead PDIP	–40°C to 85°C
LT1014DSW#PBF	LT1014DSW#TRPBF	LT1014DSW	16-Lead Plastic SO	0°C to 70°C
LT1014ISW#PBF	LT1014ISW#TRPBF	LT1014ISW	16-Lead Plastic SO	–40°C to 85°C
LT1014ACN#PBF	LT1014ACN#TRPBF	LT1014ACN	14-Lead PDIP	0°C to 70°C
LT1014CN#PBF	LT1014CN#TRPBF	LT1014CN	14-Lead PDIP	0°C to 70°C
LT1014DN#PBF	LT1014DN#TRPBF	LT1014DN	14-Lead PDIP	0°C to 70°C
LT1014IN#PBF	LT1014IN#TRPBF	LT1014IN	14-Lead PDIP	–40°C to 85°C
LT1013AMJ8#PBF	LT1013AMJ8#TRPBF	LT1013AMJ8	8-Lead CERDIP	–55°C to 125°C **(OBSOLETE)**
LT1013MJ8#PBF	LT1013MJ8#TRPBF	LT1013MJ8	8-Lead CERDIP	–55°C to 125°C **(OBSOLETE)**
LT1013ACJ8#PBF	LT1013ACJ8#TRPBF	LT1013ACJ8	8-Lead CERDIP	0°C to 70°C **(OBSOLETE)**
LT1013CJ8#PBF	LT1013CJ8#TRPBF	LT1013CJ8	8-Lead CERDIP	0°C to 70°C **(OBSOLETE)**
LT1013AMH#PBF	LT1013AMH#TRPBF	LT1013AMH	8-Lead TO-5 Metal Can	–55°C to 125°C **(OBSOLETE)**
LT1013MH#PBF	LT1013MH#TRPBF	LT1013MH	8-Lead TO-5 Metal Can	–55°C to 125°C **(OBSOLETE)**
LT1013ACH#PBF	LT1013ACH#TRPBF	LT1013ACH	8-Lead TO-5 Metal Can	0°C to 70°C **(OBSOLETE)**
LT1013CH#PBF	LT1013CH#TRPBF	LT1013CH	8-Lead TO-5 Metal Can	0°C to 70°C **(OBSOLETE)**
LT1014AMJ#PBF	LT1014AMJ#TRPBF	LT1014AMJ	14-Lead CERDIP	–55°C to 125°C **(OBSOLETE)**
LT1014MJ#PBF	LT1014MJ#TRPBF	LT1014MJ	14-Lead CERDIP	–55°C to 125°C **(OBSOLETE)**
LT1014ACJ#PBF	LT1014ACJ#TRPBF	LT1014ACJ	14-Lead CERDIP	0°C to 70°C **(OBSOLETE)**
LT1014CJ#PBF	LT1014CJ#TRPBF	LT1014CJ	14-Lead CERDIP	0°C to 70°C **(OBSOLETE)**

Consult LTC Marketing for parts specified with wider operating temperature ranges.

For more information on lead free part marking, go to: http://www.linear.com/leadfree/

For more information on tape and reel specifications, go to: http://www.linear.com/tapeandreel/. Some packages are available in 500 unit reels through designated sales channels with #TRMPBF suffix.

ELECTRICAL CHARACTERISTICS

T_A = 25°C. V_S = ±15V, V_{CM} = 0V unless otherwise noted.

SYMBOL	PARAMETER	CONDITIONS	LT1013AM/AC LT1014AM/AC MIN	TYP	MAX	LT1013C/D/I/M LT1014C/D/I/M MIN	TYP	MAX	UNITS
V_{OS}	Input Offset Voltage	LT1013 LT1014 LT1013D/I, LT1014D/I		40 50	150 180		60 60 200	300 300 800	µV µV µV
	Long-Term Input Offset Voltage Stability			0.4			0.5		µV/Mo.
I_{SO}	Input Offset Current			0.15	0.8		0.2	1.5	nA
I_B	Input Bias Current			12	20		15	30	nA
e_n	Input Noise Voltage	0.1Hz to 10Hz		0.55			0.55		$µV_{P-P}$
e_n	Input Noise Voltage Density	f_O = 10Hz f_O = 1000Hz		24 22			24 22		nV/√Hz nV/√Hz
i_n	Input Noise Current Density	f_O = 10Hz		0.07			0.07		pA/√Hz
	Input Resistance – Differential Common Mode	(Note 2)	100	400 5		70	300 4		MΩ GΩ
A_{VOL}	Large-Signal Voltage Gain	V_O = ±10V, R_L = 2k V_O = ±10V, R_L = 600Ω	1.5 0.8	8.0 2.5		1.2 0.5	7.0 2.0		V/µV V/µV
	Input Voltage Range		13.5 −15.0	13.8 −15.3		13.5 −15.0	13.8 −15.3		V V
CMRR	Common Mode Rejection Ratio	V_{CM} = 13.5V, −15.0V	100	117		97	114		dB
PSRR	Power Supply Rejection Ratio	V_S = ±2V to ±18V	103	120		100	117		dB
	Channel Separation	V_O = ±10V, R_L = 2k	123	140		120	137		dB
V_{OUT}	Output Voltage Swing	R_L = 2k	±13	±14		±12.5	±14		V
	Slew Rate		0.2	0.4		0.2	0.4		V/µs
I_S	Supply Current	Per Amplifier		0.35	0.50		0.35	0.55	mA

T_A = 25°C. V_S^+ = 5V, V_S^- = 0V, V_{OUT} = 1.4V, V_{CM} = 0V unless otherwise noted

SYMBOL	PARAMETER	CONDITIONS	LT1013AM/AC LT1014AM/AC MIN	TYP	MAX	LT1013C/D/I/M LT1014C/D/I/M MIN	TYP	MAX	UNITS
V_{OS}	Input Offset Voltage	LT1013 LT1014 LT1013D/I, LT1014D/I		60 70	250 280		90 90 250	450 450 950	µV µV µV
I_{OS}	Input Offset Current			0.2	1.3		0.3	2.0	nA
I_B	Input Bias Current			15	35		18	50	nA
A_{VOL}	Large-Signal Voltage Gain	V_O = 5mV to 4V, R_L = 500Ω		1.0			1.0		V/µV
	Input Voltage Range		3.5 0	3.8 −0.3		3.5 0	3.8 −0.3		V V
V_{OUT}	Output Voltage Swing	Output Low, No Load Output Low, 600Ω to Ground Output Low, I_{SINK} = 1mA Output High, No Load Output High, 600Ω to Ground	 4.0 3.4	15 5 220 4.4 4.0	25 10 350	 4.0 3.4	15 5 220 4.4 4.0	25 10 350	mV mV mV V V
I_S	Supply Current	Per Amplifier		0.31	0.45		0.32	0.50	mA

ELECTRICAL CHARACTERISTICS

The ● denotes the specifications which apply over the temperature range $-55°C \le T_A \le 125°C$. $V_S = \pm15V$, $V_{CM} = 0V$ unless otherwise noted.

SYMBOL	PARAMETER	CONDITIONS		LT1013AM MIN	LT1013AM TYP	LT1013AM MAX	LT1014AM MIN	LT1014AM TYP	LT1014AM MAX	LT1013M/LT1014M MIN	LT1013M/LT1014M TYP	LT1013M/LT1014M MAX	UNITS
V_{OS}	Input Offset Voltage		●		80	300		90	350		110	550	µV
		$V_S = 5V, 0V; V_O = 1.4V$											
		$-55°C \le T_A \le 100°C$	●		80	450		90	480		100	750	µV
		$V_{CM} = 0.1V, T_A = 125°C$			120	450		150	480		200	750	µV
		$V_{CM} = 0V, T_A = 125°C$			250	900		300	960		400	1500	µV
	Input Offset Voltage Drift	(Note 3)	●		0.4	2.0		0.4	2.0		0.5	2.5	µV/°C
I_{OS}	Input Offset Current		●		0.3	2.5		0.3	2.8		0.4	5.0	nA
		$V_S = 5V, 0V; V_O = 1.4V$	●		0.6	6.0		0.7	7.0		0.9	10.0	nA
I_B	Input Bias Current		●		15	30		15	30		18	45	nA
		$V_S = 5V, 0V; V_O = 1.4V$	●		20	80		25	90		28	120	nA
A_{VOL}	Large-Signal Voltage Gain	$V_O = \pm10V, R_L = 2k$	●	0.5	2.0		0.4	2.0		0.25	2.0		V/µV
CMRR	Common Mode Rejection	$V_{CM} = 13.0V, -14.9V$	●	97	114		96	114		94	113		dB
PSRR	Power Supply Rejection Ratio	$V_S = \pm2V$ to $\pm18V$	●	100	117		100	117		97	116		dB
V_{OUT}	Output Voltage Swing	$R_L = 2k$	●	±12	±13.8		±12	±13.8		±11.5	±13.8		V
		$V_S = 5V, 0V$											
		$R_L = 600\Omega$ to Ground											
		Output Low	●		6	15		6	15		6	18	mV
		Output High	●	3.2	3.8		3.2	3.8		3.1	3.8		V
I_S	Supply Current Per Amplifier		●		0.38	0.60		0.38	0.60		0.38	0.7	mA
		$V_S = 5V, 0V; V_O = 1.4V$	●		0.34	0.55		0.34	0.55		0.34	0.65	mA

ELECTRICAL CHARACTERISTICS

The ● denotes the specifications which apply over the temperature range $-40°C \le T_A \le 85°C$ for LT1013I, LT1014I, $0°C \le T_A \le 70°C$ for LT1013C, LT1013D, LT1014C, LT1014D. $V_S = \pm15V$, $V_{CM} = 0V$ unless otherwise noted.

SYMBOL	PARAMETER	CONDITIONS		LT1013AC MIN	LT1013AC TYP	LT1013AC MAX	LT1014AC MIN	LT1014AC TYP	LT1014AC MAX	LT1013C/D/I LT1014C/D/I MIN	LT1013C/D/I LT1014C/D/I TYP	LT1013C/D/I LT1014C/D/I MAX	UNITS
V_{OS}	Input Offset Voltage		●		55	240		65	270		80	400	μV
		LT1013D/I, LT1014D/I	●								230	1000	μV
		V_S = 5V, 0V; V_O = 1.4V	●		75	350		85	380		110	570	μV
		LT1013D/I, LT1014D/I V_S = 5V, 0V; V_O = 1.4V	●								280	1200	μV
	Average Input Offset Voltage Drift	(Note 3)	●		0.3	2.0		0.3	2.0		0.4	2.5	μV/°C
		LT1013D/I, LT1014D/I	●								0.7	5.0	μV/°C
I_{OS}	Input Offset Current		●		0.2	1.5		0.2	1.7		0.3	2.8	nA
		V_S = 5V, 0V; V_O = 1.4V	●		0.4	3.5		0.4	4.0		0.5	6.0	nA
I_B	Input Bias Current		●		13	25		13	25		16	38	nA
		V_S = 5V, 0V; V_O = 1.4V	●		18	55		20	60		24	90	nA
A_{VOL}	Large-Signal Voltage Gain	V_O = ±10V, R_L = 2k	●	1.0	5.0		1.0	5.0		0.7	4.0		V/μV
CMRR	Common Mode Rejection Ratio	V_{CM} = 13.0V, –15.0V	●	98	116		98	116		94	113		dB
PSRR	Power Supply Rejection Ratio	V_S = ±2V to ±18V	●	101	119		101	119		97	116		dB
V_{OUT}	Output Voltage Swing	R_L = 2k	●	±12.5	±13.9		±12.5	±13.9		±12.0	±13.9		V
		V_S = 5V, 0V; R_L = 600Ω Output Low	●		6	13		6	13		6	13	mV
		Output High	●	3.3	3.9		3.3	3.9		3.2	3.9		V
I_S	Supply Current per Amplifier		●		0.36	0.55		0.36	0.55		0.37	0.60	mA
		V_S = 5V, 0V; V_O = 1.4V	●		0.32	0.50		0.32	0.50		0.34	0.55	mA

Note 1: Stresses beyond those listed under Absolute Maximum Ratings may cause permanent damage to the device. Exposure to any Absolute Rating condition for extended periods may affect device reliability and lifetime.

Note 2: This parameter is guaranteed by design and is not tested. Typical parameters are defined as the 60% yield of parameter distributions of individual amplifiers; i.e., out of 100 LT1014s (or 100 LT1013s) typically 240 op amps (or 120) will be better than the indicated specification.

Note 3: This parameter is not 100% tested.

TYPICAL PERFORMANCE CHARACTERISTICS

Offset Voltage Drift with Temperature of Representative Units

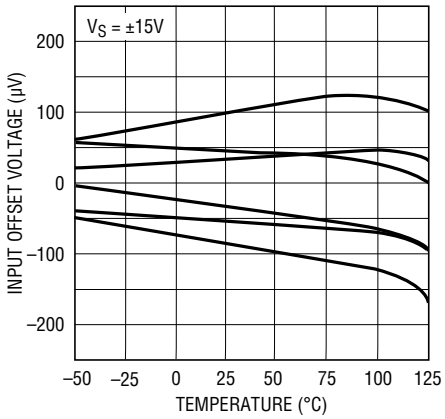

1013/14 TPC01

Offset Voltage vs Balanced Source Resistance

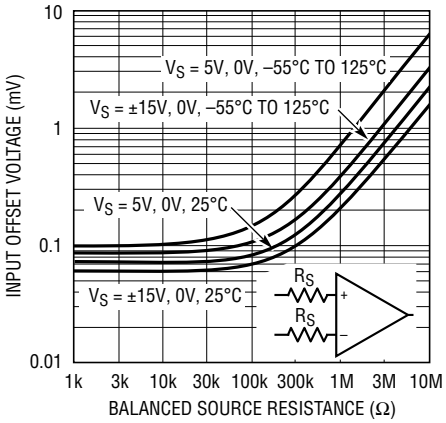

1013/14 TPC02

Warm-Up Drift

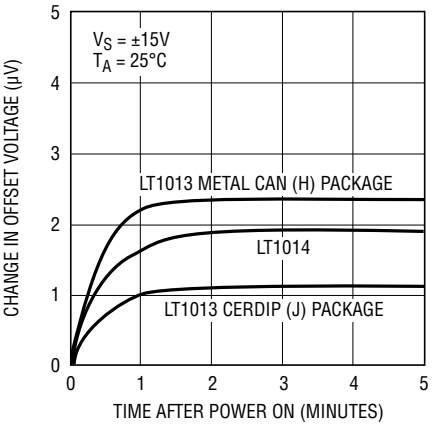

1013/14 TPC03

Common Mode Rejection Ratio vs Frequency

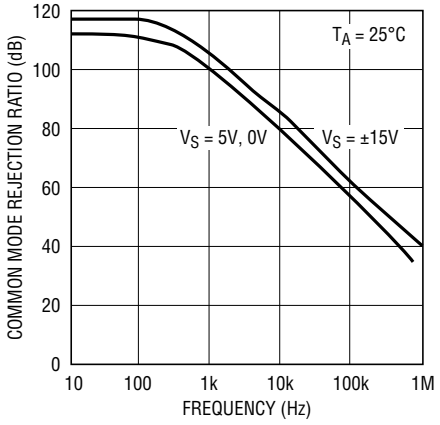

1013/14 TPC04

Power Supply Rejection Ratio vs Frequency

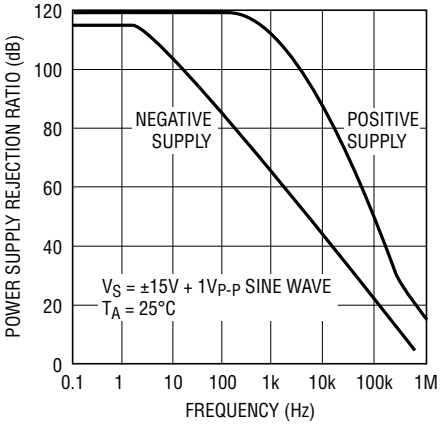

1013/14 TPC05

0.1Hz to 10Hz Noise

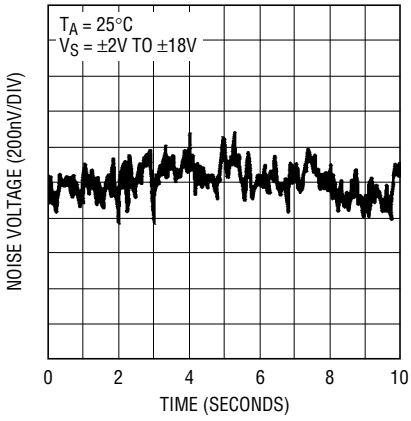

1013/14 TPC06

Noise Spectrum

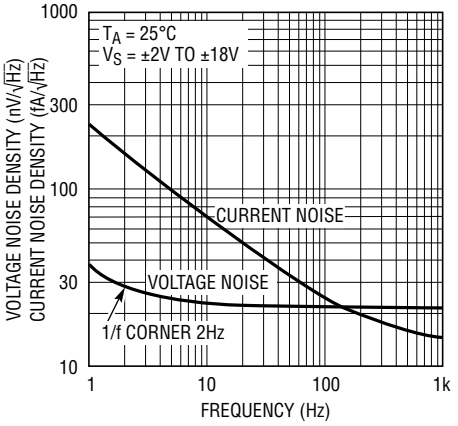

1013/14 TPC07

10Hz Voltage Noise Distribution

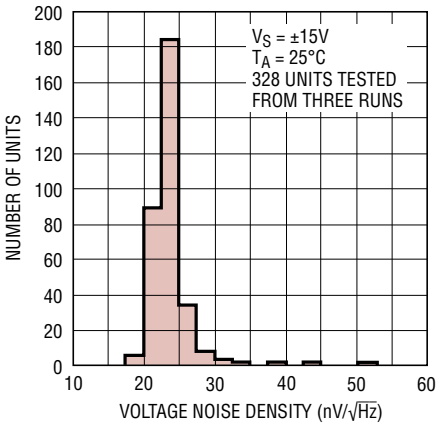

1013/14 TPC08

Supply Current vs Temperature

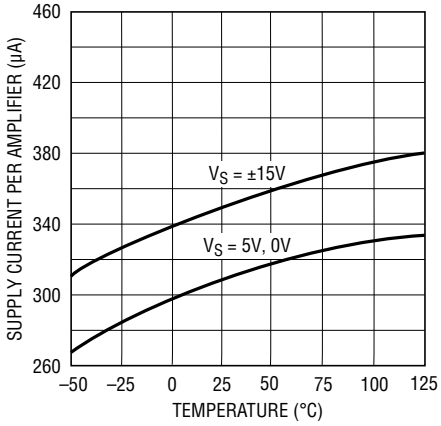

1013/14 TPC09

TYPICAL PERFORMANCE CHARACTERISTICS

Input Bias Current vs Common Mode Voltage

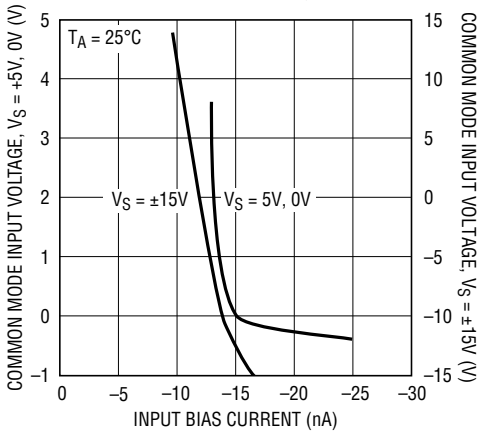

1013/14 TPC10

Input Offset Current vs Temperature

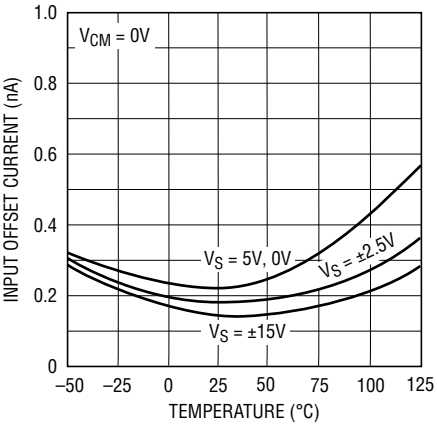

1013/14 TPC11

Input Bias Current vs Temperature

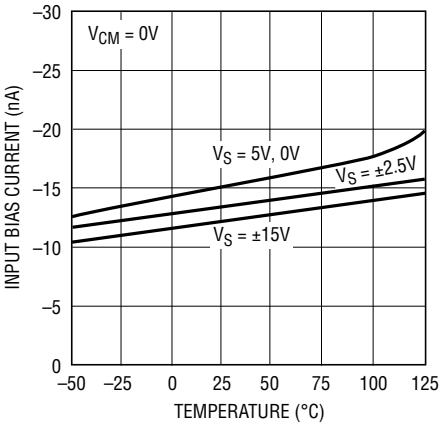

1013/14 TPC12

Output Saturation vs Sink Current vs Temperature

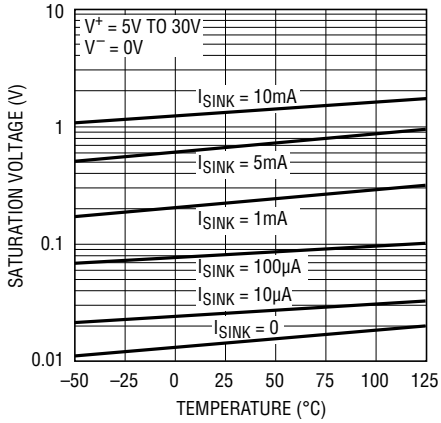

1013/14 TPC13

Small-Signal Transient Response, V_S = ±15V

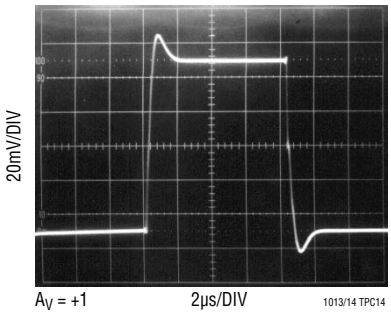

1013/14 TPC14

Large-Signal Transient Response, V_S = ±15V

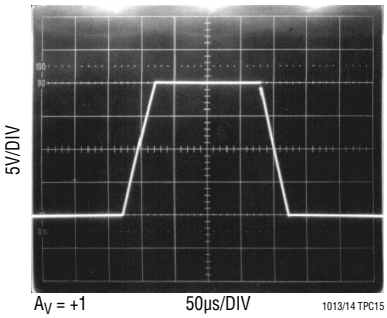

1013/14 TPC15

Small-Signal Transient Response, V_S = 5V, 0V

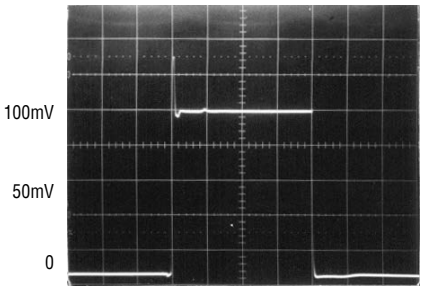

1013/14 TPC16

R_L = 600Ω TO GROUND
INPUT = 0V TO 100mV PULSE

Large-Signal Transient Response, V_S = 5V, 0V

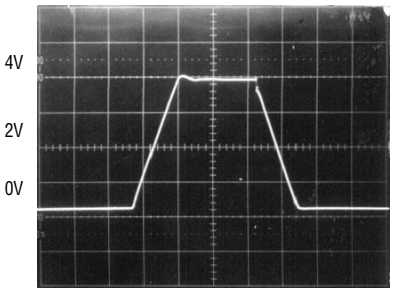

1013/14 TPC17

R_L = 4.7k TO 5V
INPUT = 0V TO 4V PULSE

Large-Signal Transient Response, V_S = 5V, 0V

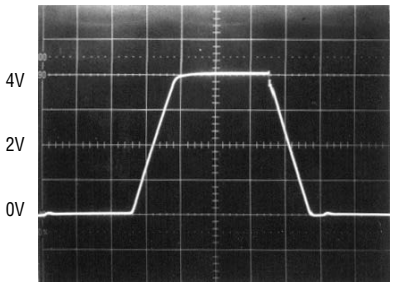

1013/14 TPC18

NO LOAD
INPUT = 0V TO 4V PULSE

TYPICAL PERFORMANCE CHARACTERISTICS

Output Short-Circuit Current vs Time

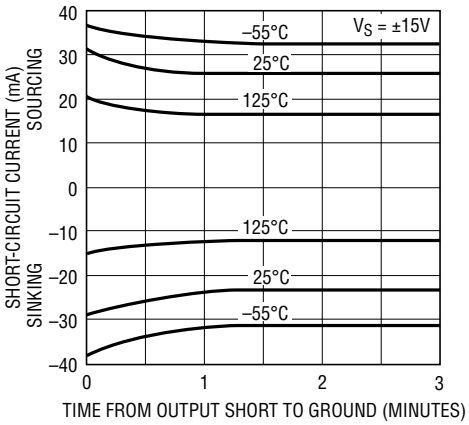

Voltage Gain vs Load Resistance

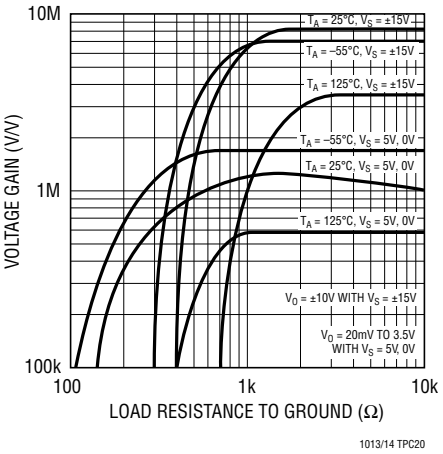

Voltage Gain vs Frequency

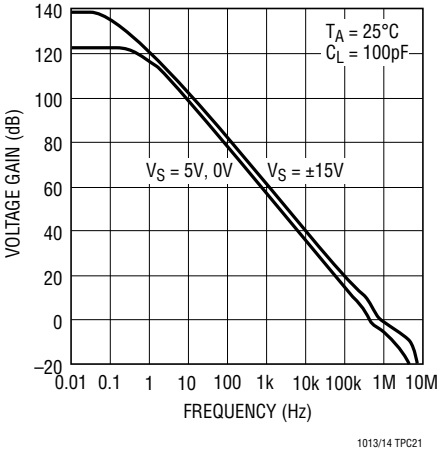

Gain, Phase vs Frequency

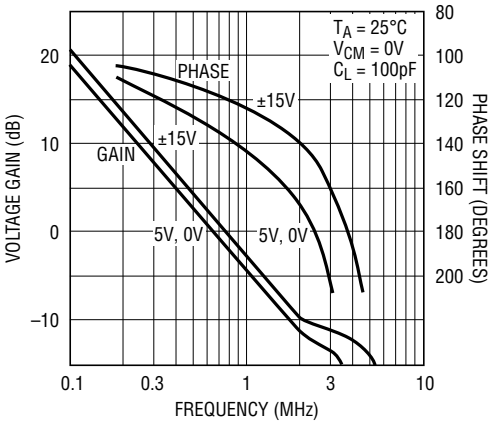

Channel Separation vs Frequency

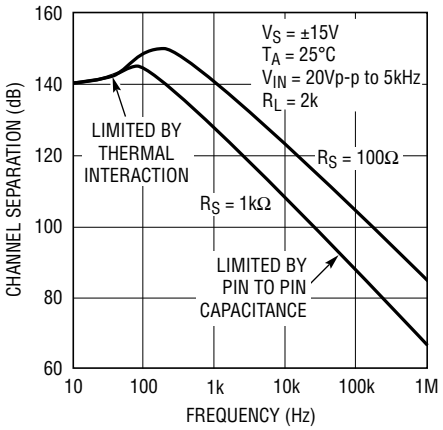

APPLICATIONS INFORMATION

Single Supply Operation

The LT1013/LT1014 are fully specified for single supply operation, i.e., when the negative supply is 0V. Input common mode range includes ground; the output swings within a few millivolts of ground. Single supply operation, however, can create special difficulties, both at the input and at the output. The LT1013/LT1014 have specific circuitry which addresses these problems.

At the input, the driving signal can fall below 0V—inadvertently or on a transient basis. If the input is more than a few hundred millivolts below ground, two distinct problems can occur on previous single supply designs, such as the LM124, LM158, OP-20, OP-21, OP-220, OP-221, OP-420:

a) When the input is more than a diode drop below ground, unlimited current will flow from the substrate (V^- terminal) to the input. This can destroy the unit. On the LT1013/LT1014, the 400Ω resistors, in series with the input (see Schematic Diagram), protect the devices even when the input is 5V below ground.

APPLICATIONS INFORMATION

b) When the input is more than 400mV below ground (at 25°C), the input stage saturates (transistors Q3 and Q4) and phase reversal occurs at the output. This can cause lock-up in servo systems. Due to a unique phase reversal protection circuitry (Q21, Q22, Q27, Q28), the LT1013/LT1014's outputs do not reverse, as illustrated below, even when the inputs are at –1.5V.

There is one circumstance, however, under which the phase reversal protection circuitry does not function: when the other op amp on the LT1013, or one specific amplifier of the other three on the LT1014, is driven hard into negative saturation at the output.

Phase reversal protection does not work on amplifier:

A when D's output is in negative saturation. B's and C's outputs have no effect.

B when C's output is in negative saturation. A's and D's outputs have no effect.

C when B's output is in negative saturation. A's and D's outputs have no effect.

D when A's output is negative saturation. B's and C's outputs have no effect.

At the output, the aforementioned single supply designs either cannot swing to within 600mV of ground (OP-20) or cannot sink more than a few microamperes while swinging to ground (LM124, LM158). The LT1013/LT1014's all-NPN output stage maintains its low output resistance and high gain characteristics until the output is saturated.

In dual supply operations, the output stage is crossover distortion-free.

Comparator Applications

The single supply operation of the LT1013/LT1014 lends itself to its use as a precision comparator with TTL compatible output:

In systems using both op amps and comparators, the LT1013/LT1014 can perform multiple duties; for example, on the LT1014, two of the devices can be used as op amps and the other two as comparators.

Voltage Follower with Input Exceeding the Negative Common Mode Range

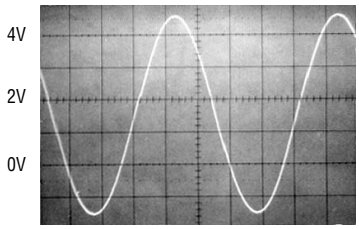

$6V_{P-P}$ INPUT, –1.5V TO 4.5V

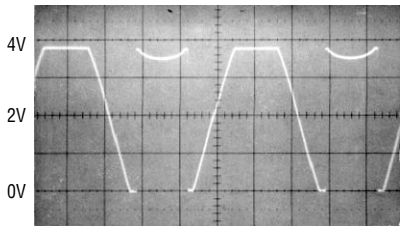

LM324, LM358, OP-20
EXHIBIT OUTPUT PHASE
REVERSAL

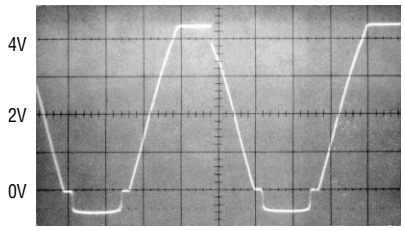

LT1013/LT1014
NO PHASE REVERSAL

Comparator Rise Response Time
10mV, 5mV, 2mV Overdrives

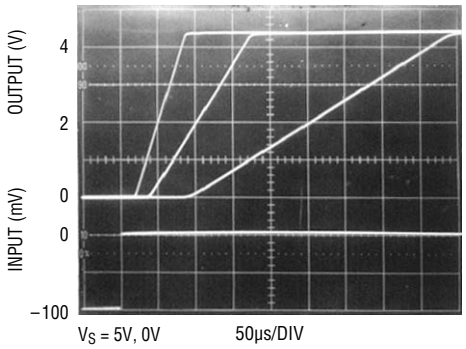

Comparator Fall Response Time
to 10mV, 5mV, 2mV Overdrives

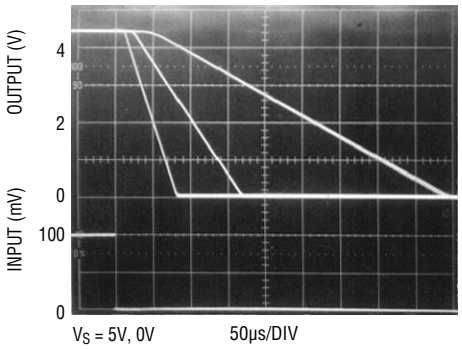

10134fe

APPLICATIONS INFORMATION

Low Supply Operation

The minimum supply voltage for proper operation of the LT1013/LT1014 is 3.4V (three Ni-Cad batteries). Typical supply current at this voltage is 290µA, therefore power dissipation is only one milliwatt per amplifier.

Noise Testing

For applications information on noise testing and calculations, please see the LT1007 or LT1008 data sheet.

Test Circuit for Offset Voltage and Offset Drift with Temperature

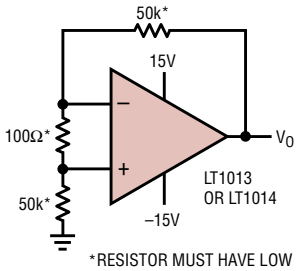

*RESISTOR MUST HAVE LOW THERMOELECTRIC POTENTIAL.
**THIS CIRCUIT IS ALSO USED AS THE BURN-IN CONFIGURATION, WITH SUPPLY VOLTAGES INCREASED TO ±20V.
$V_O = 1000V_{OS}$

LT1013/14 F06

TYPICAL APPLICATIONS

50MHz Thermal RMS-to-DC Converter

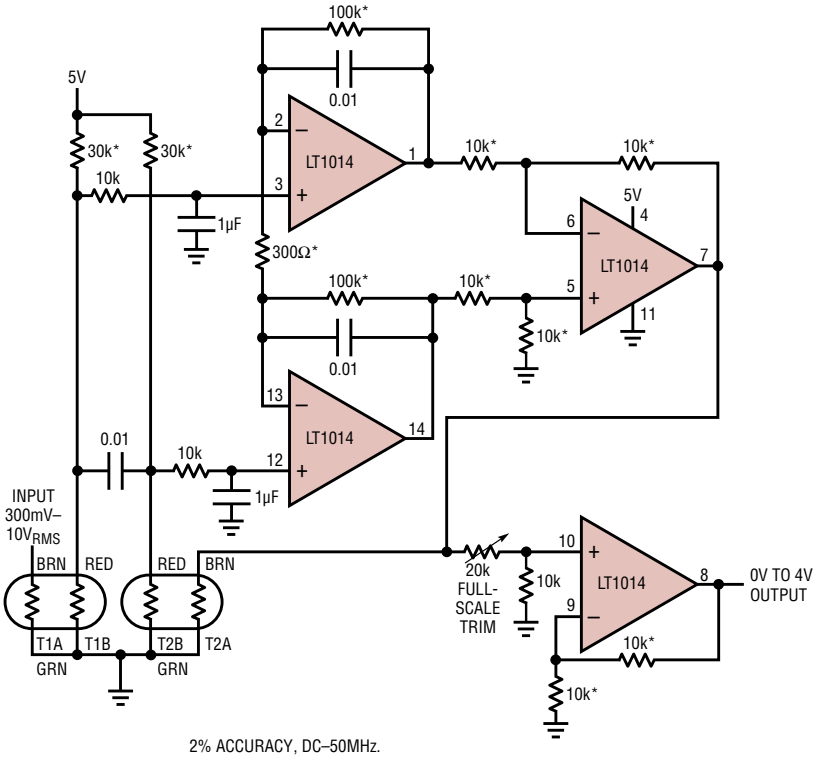

2% ACCURACY, DC–50MHz.
100:1 CREST FACTOR CAPABILITY.
* 0.1% RESISTOR.
T1–T2 = YELLOW SPRINGS INST. CO. THERMISTOR COMPOSITE #44018.
ENCLOSE T1 AND T2 IN STYROFOAM.
7.5mW DISSIPATION.

1013/14 TA03

5V Single Supply Dual Instrumentation Amplifier

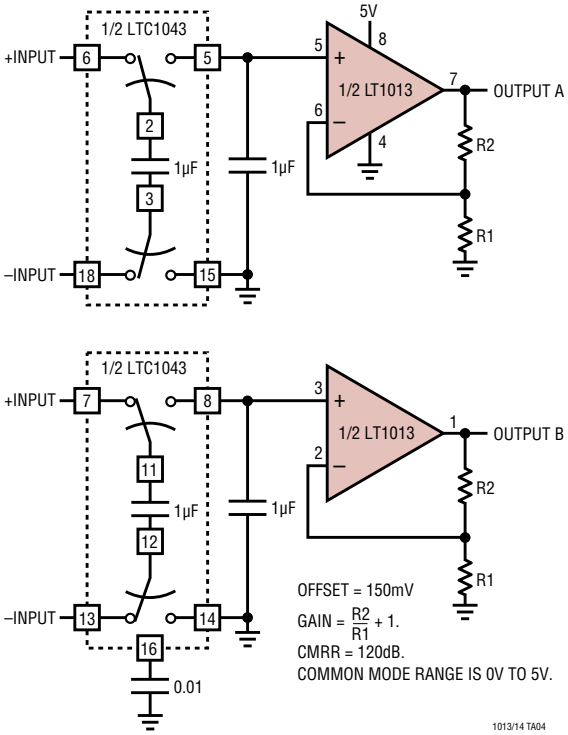

1013/14 TA04

TYPICAL APPLICATIONS

Hot-Wire Anemometer

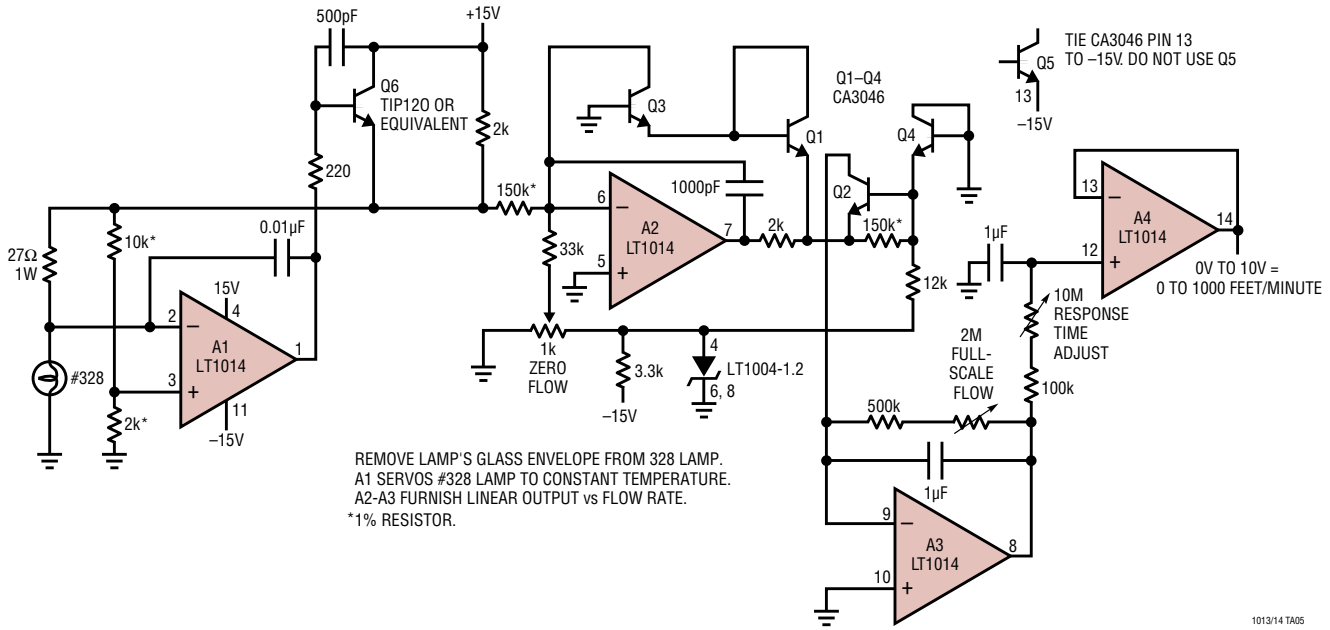

Liquid Flowmeter

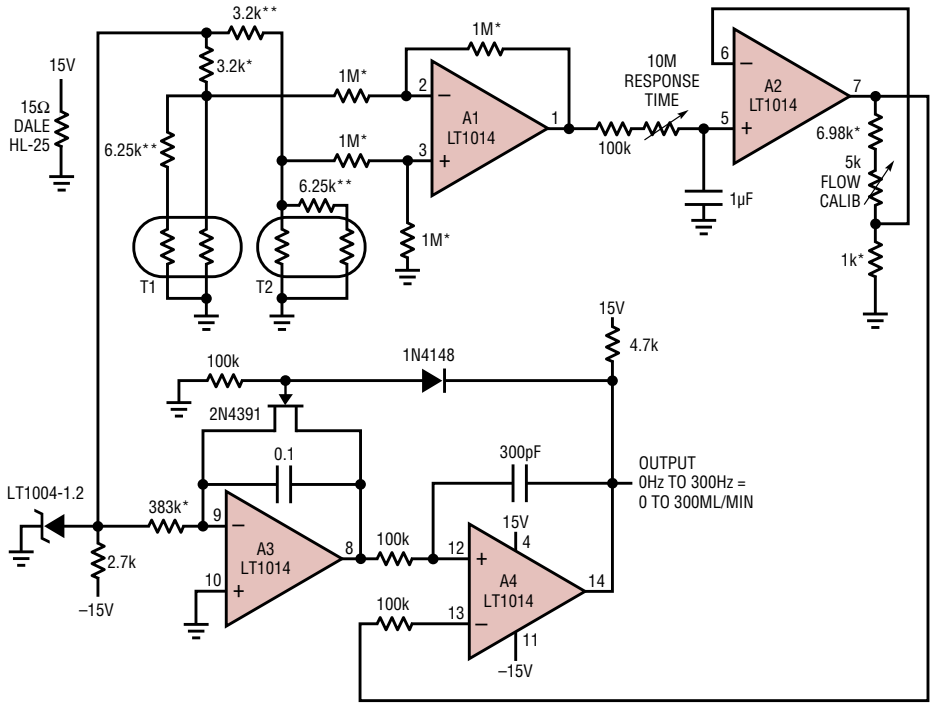

* 1% FILM RESISTOR.
** SUPPLIED WITH YSI THERMISTOR NETWORK.
T1, T2 YSI THERMISTOR NETWORK = #44201.
FLOW IN PIPE IS INVERSELY PROPORTIONAL TO RESISTANCE OF T1–T2 TEMPERATURE DIFFERENCE.
A1–A2 PROVIDE GAIN. A3–A4 PROVIDE LINEARIZED FREQUENCY OUTPUT.

1013/14 TA06

TYPICAL APPLICATIONS

5V Powered Precision Instrumentation Amplifier

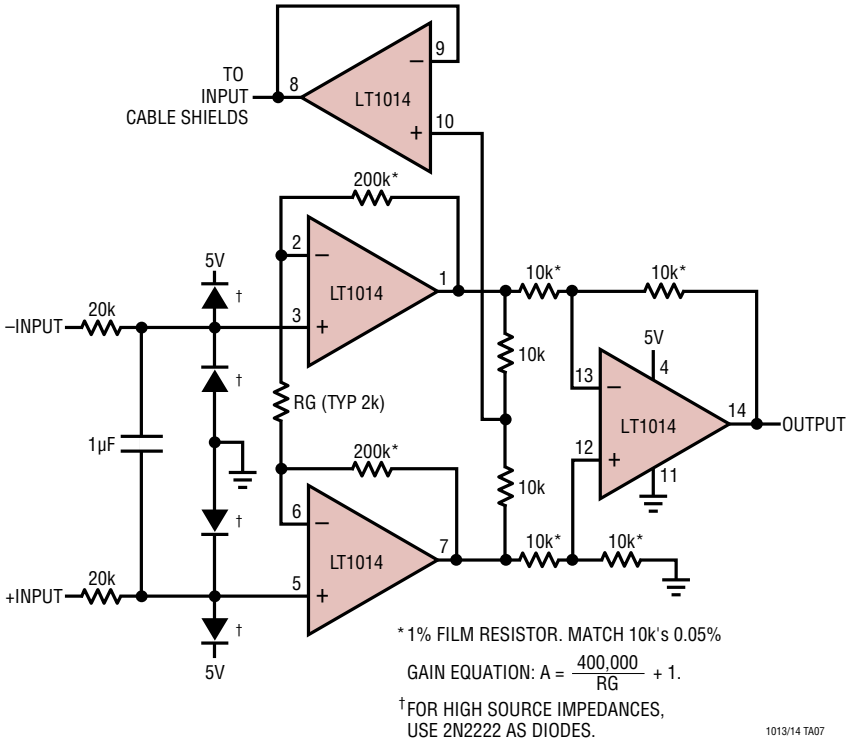

9V Battery Powered Strain Gauge Signal Conditioner

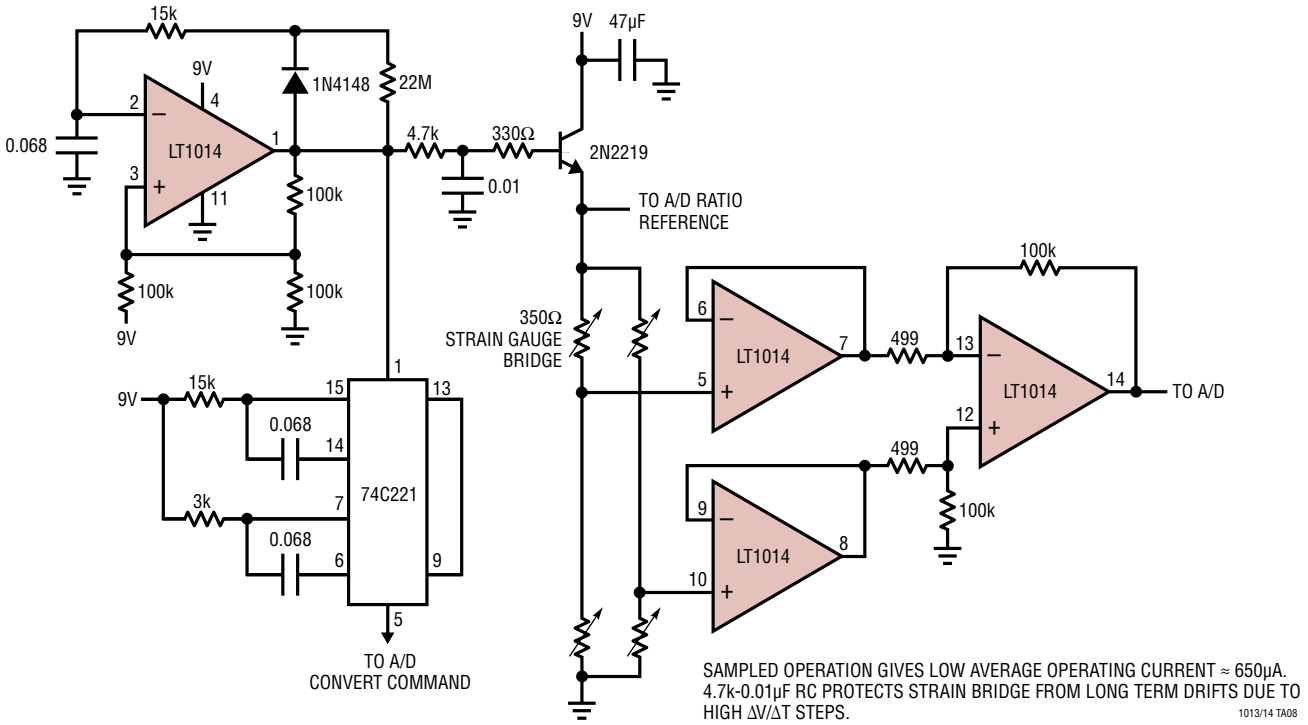

TYPICAL APPLICATIONS

5V Powered Motor Speed Controller
No Tachometer Required

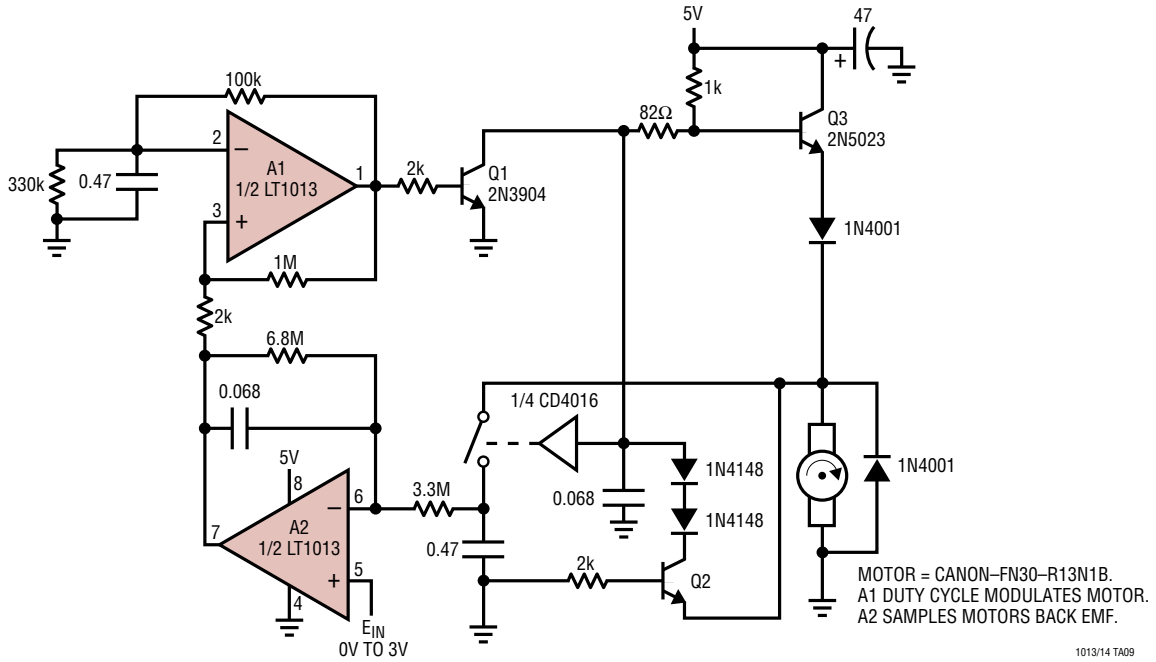

5V Powered EEPROM Pulse Generator

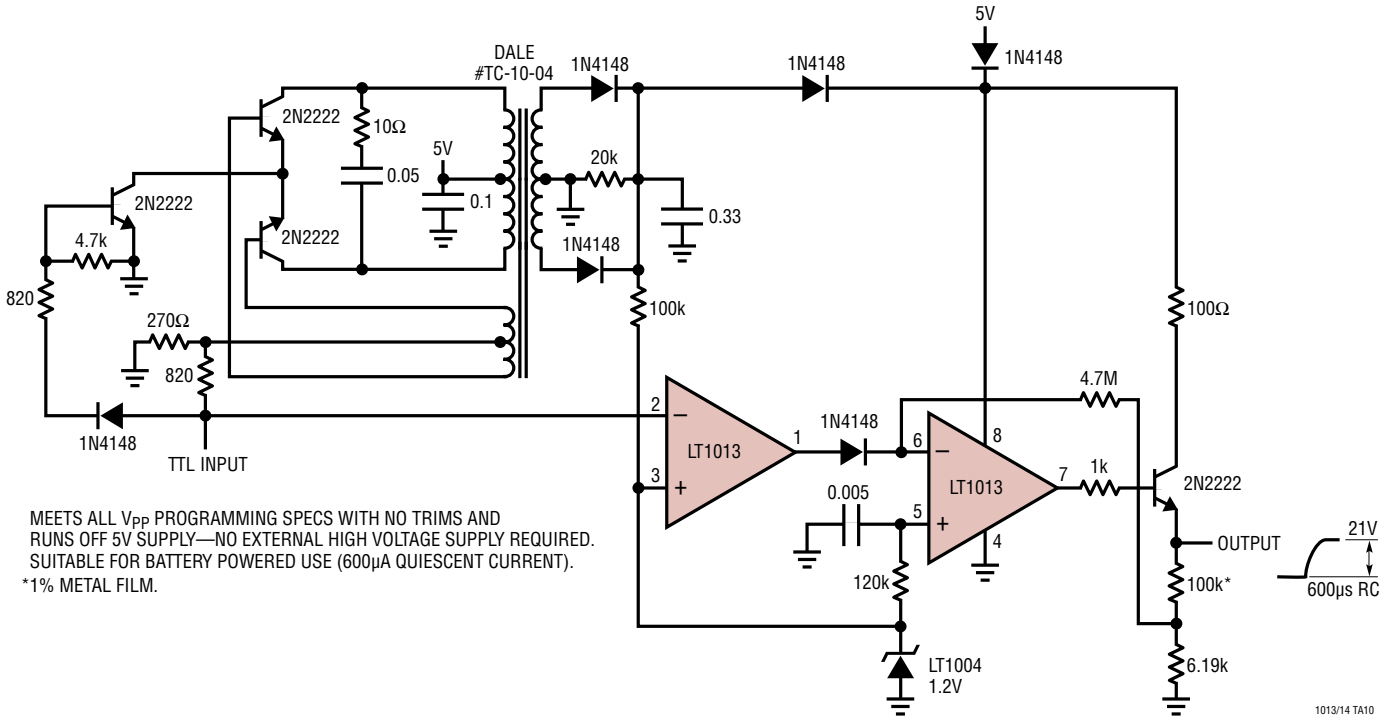

TYPICAL APPLICATIONS

Methane Concentration Detector with Linearized Output

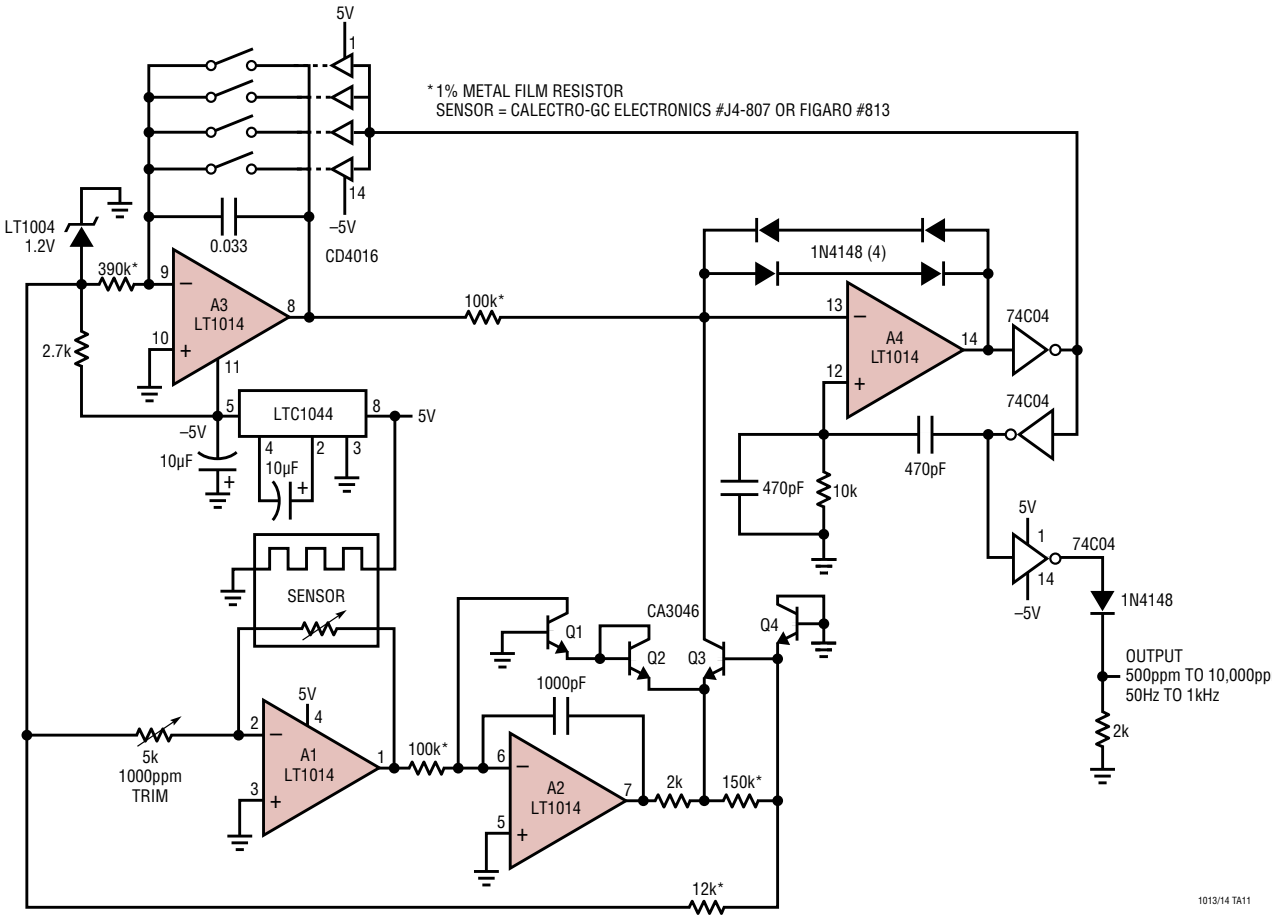

Low Power 9V to 5V Converter

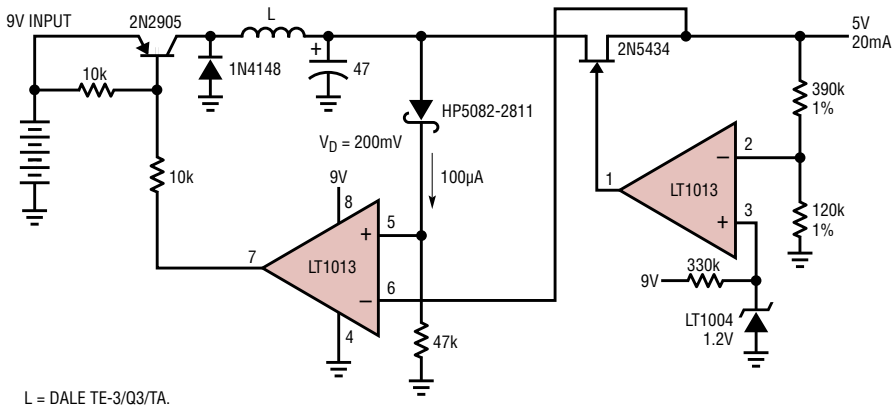

L = DALE TE-3/Q3/TA.
SHORT CIRCUIT CURRENT = 30mA.
≈ 75% EFFICIENCY.
SWITCHING PREREGULATOR CONTROLS DROP ACROSS FET TO 200mV.

TYPICAL APPLICATIONS

5V Powered 4mA to 20mA Current Loop Transmitter†

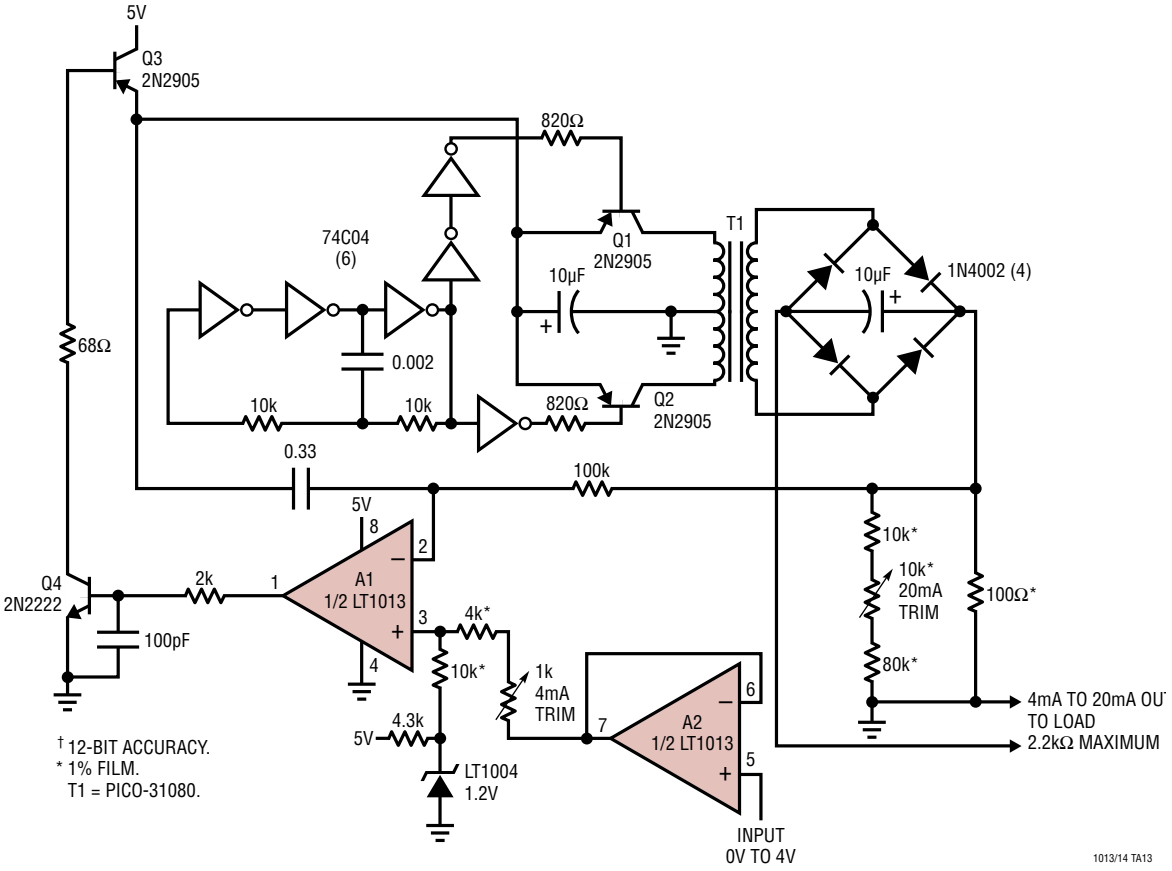

Fully Floating Modification to 4mA-20mA Current Loop†

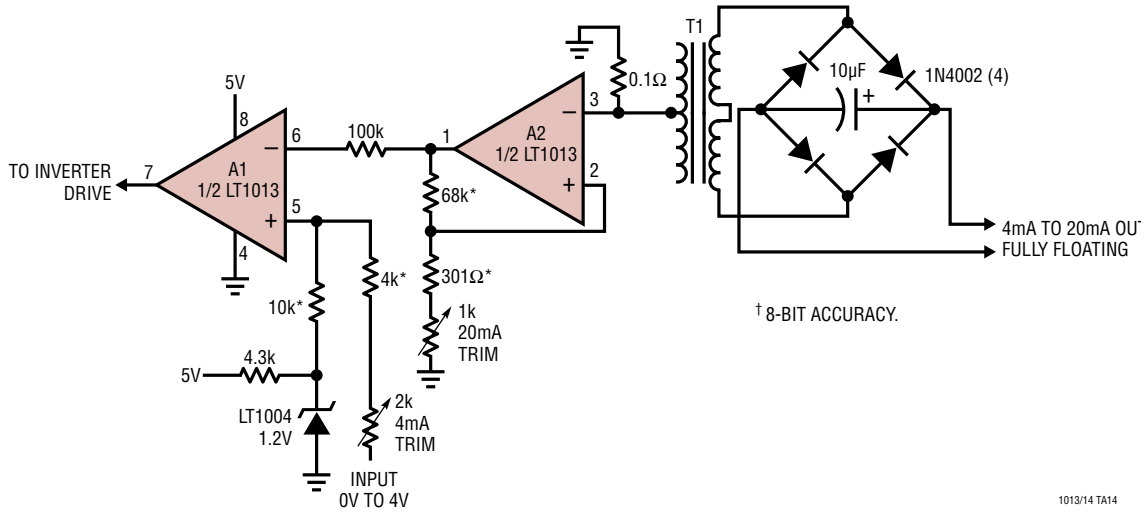

TYPICAL APPLICATIONS

5V Powered, Linearized Platinum RTD Signal Conditioner

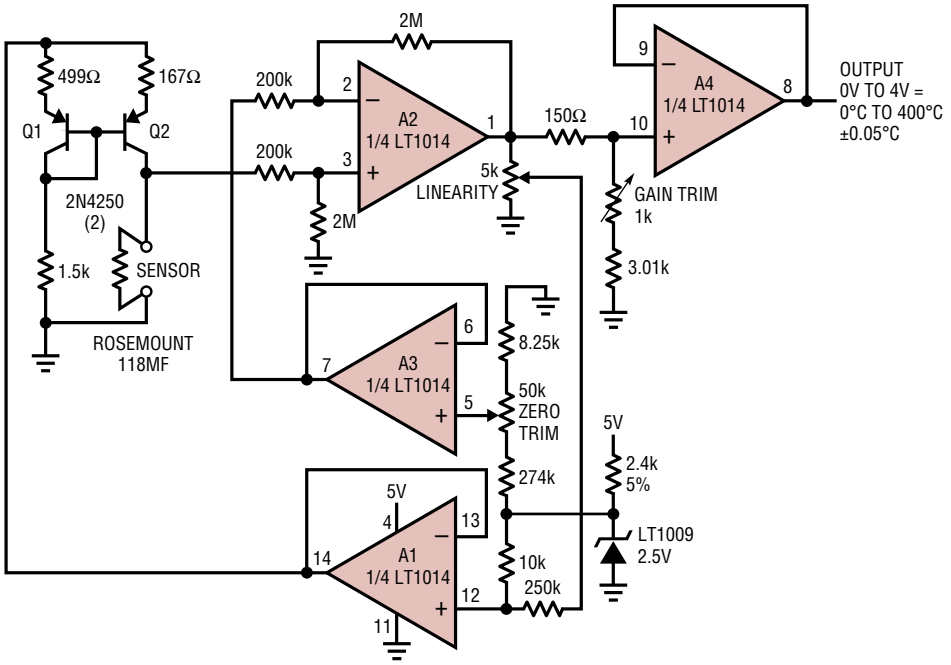

ALL RESISTORS ARE TRW-MAR-6 METAL FILM.
RATIO MATCH 2M–200K ± 0.01%.
TRIM SEQUENCE:
SET SENSOR TO 0° VALUE.
ADJUST ZERO FOR 0V OUT.
SET SENSOR TO 100°C VALUE.
ADJUST GAIN FOR 1.000V OUT.
SET SENSOR TO 400°C.
ADJUST LINEARITY FOR 4.000V OUT, REPEAT AS REQUIRED.

1013/14 TA15

Strain Gauge Bridge Signal Conditioner

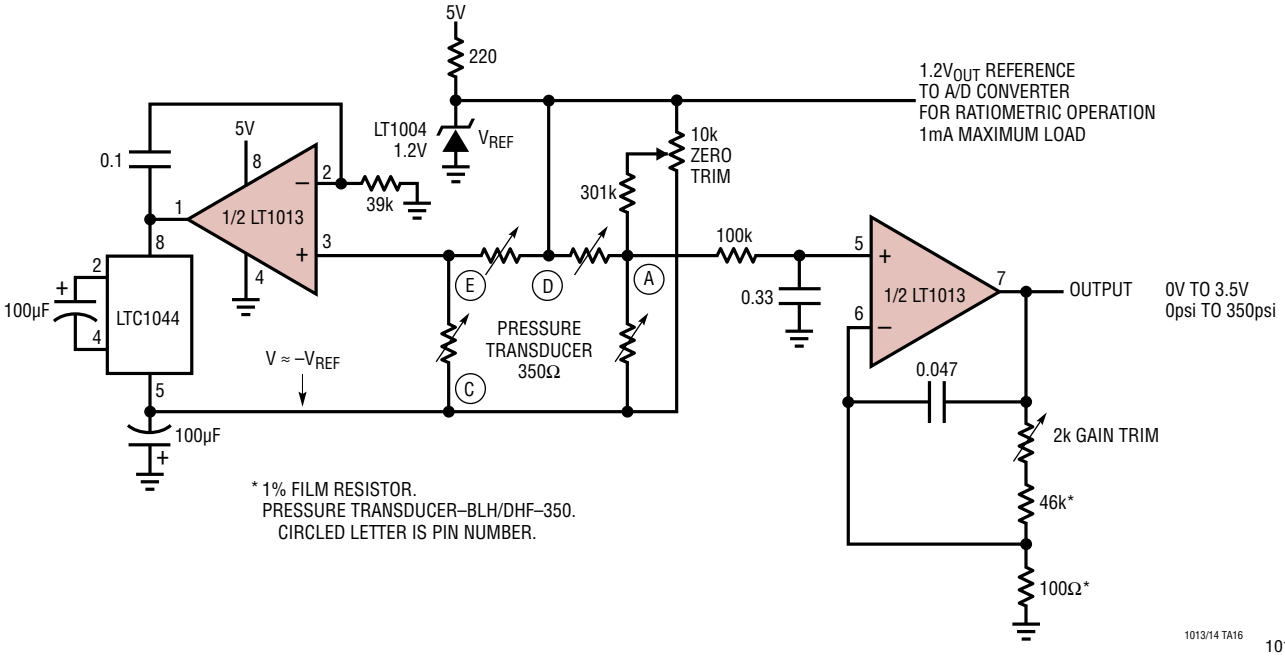

* 1% FILM RESISTOR.
PRESSURE TRANSDUCER–BLH/DHF–350.
CIRCLED LETTER IS PIN NUMBER.

1013/14 TA16

TYPICAL APPLICATIONS

LVDT Signal Conditioner

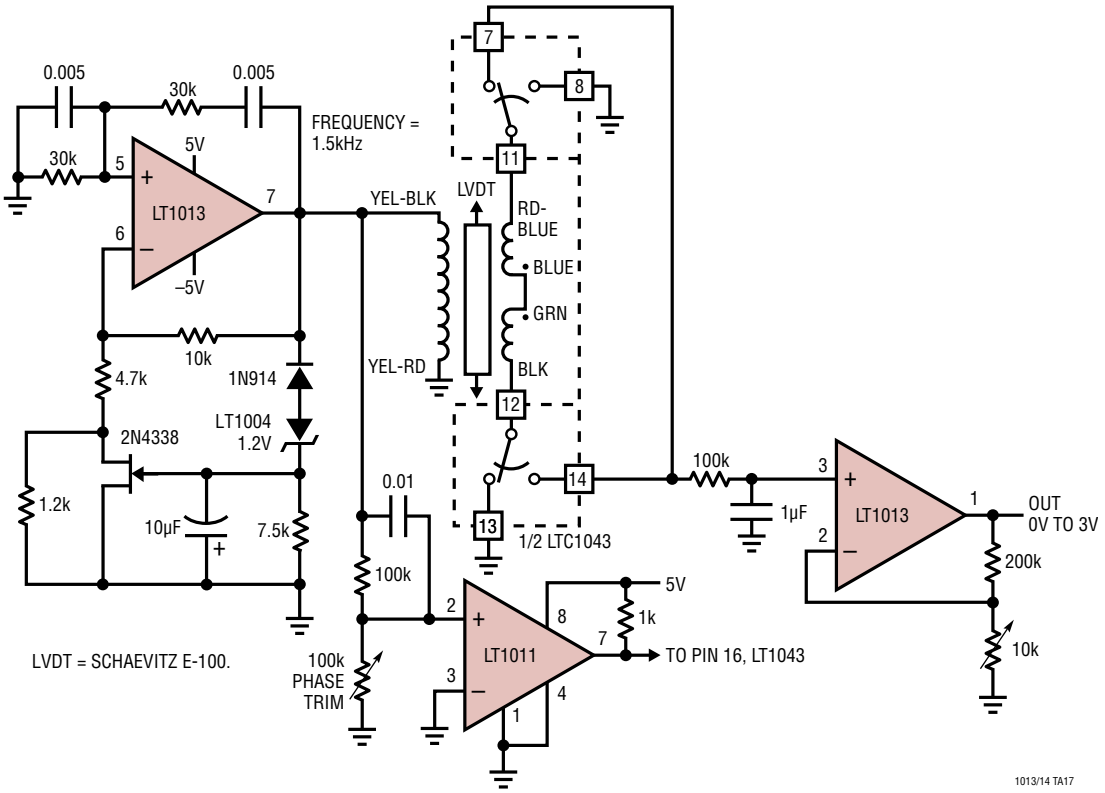

Triple Op Amp Instrumentation Amplifier with Bias Current Cancellation

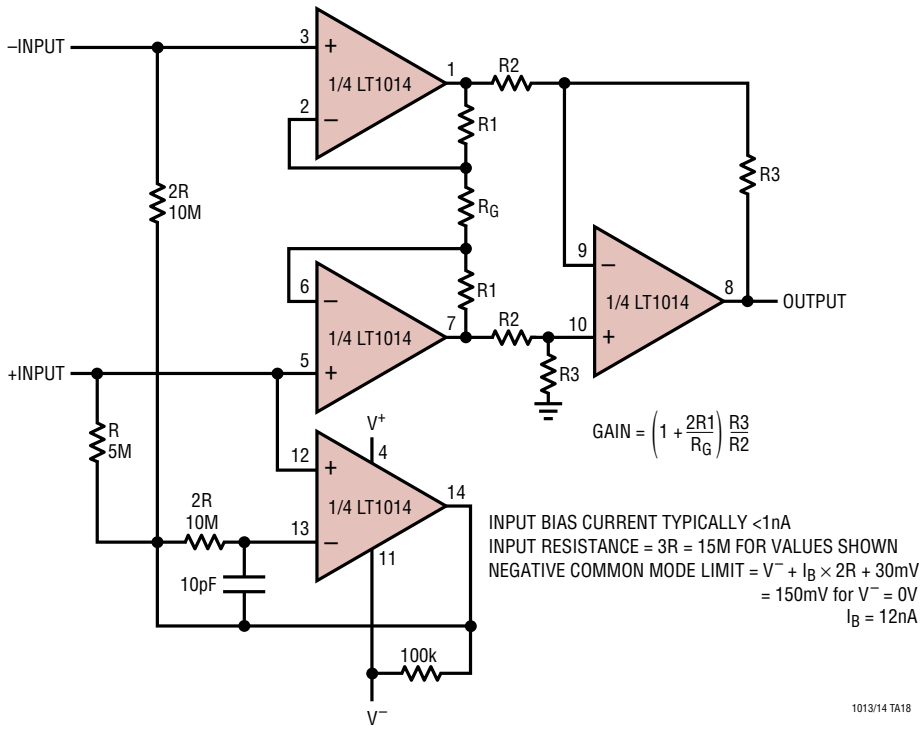

TYPICAL APPLICATIONS

Low Dropout Regulator for 6V Battery

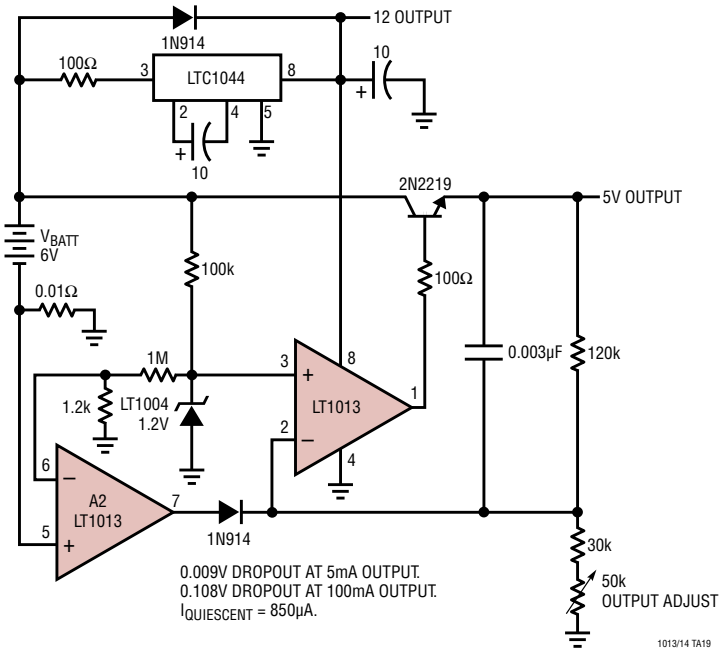

Voltage Controlled Current Source with Ground Referred Input and Output

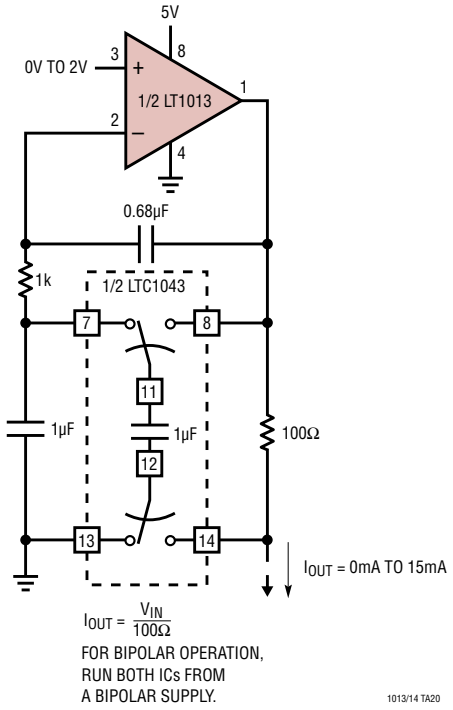

TYPICAL APPLICATIONS

6V to ±15V Regulating Converter

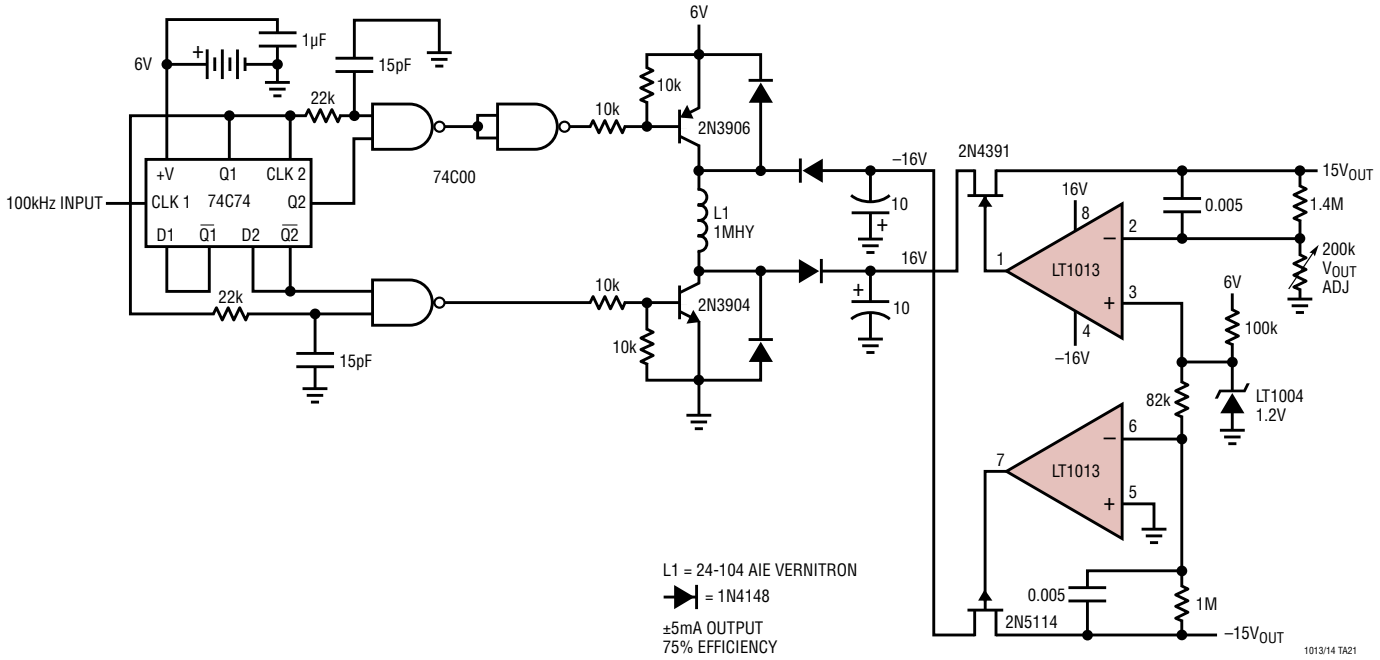

Low Power, 5V Driven, Temperature Compensated Crystal Oscillator (TXCO)†

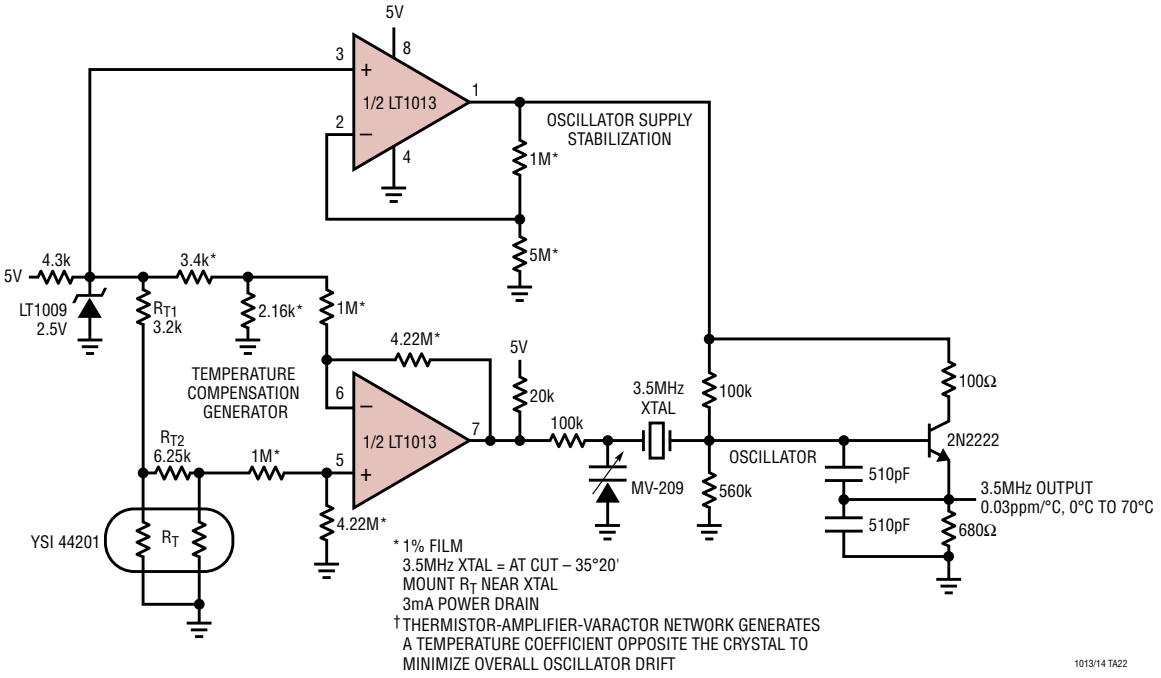

SCHEMATIC DIAGRAM

1/2 LT1013, 1/4 LT1014

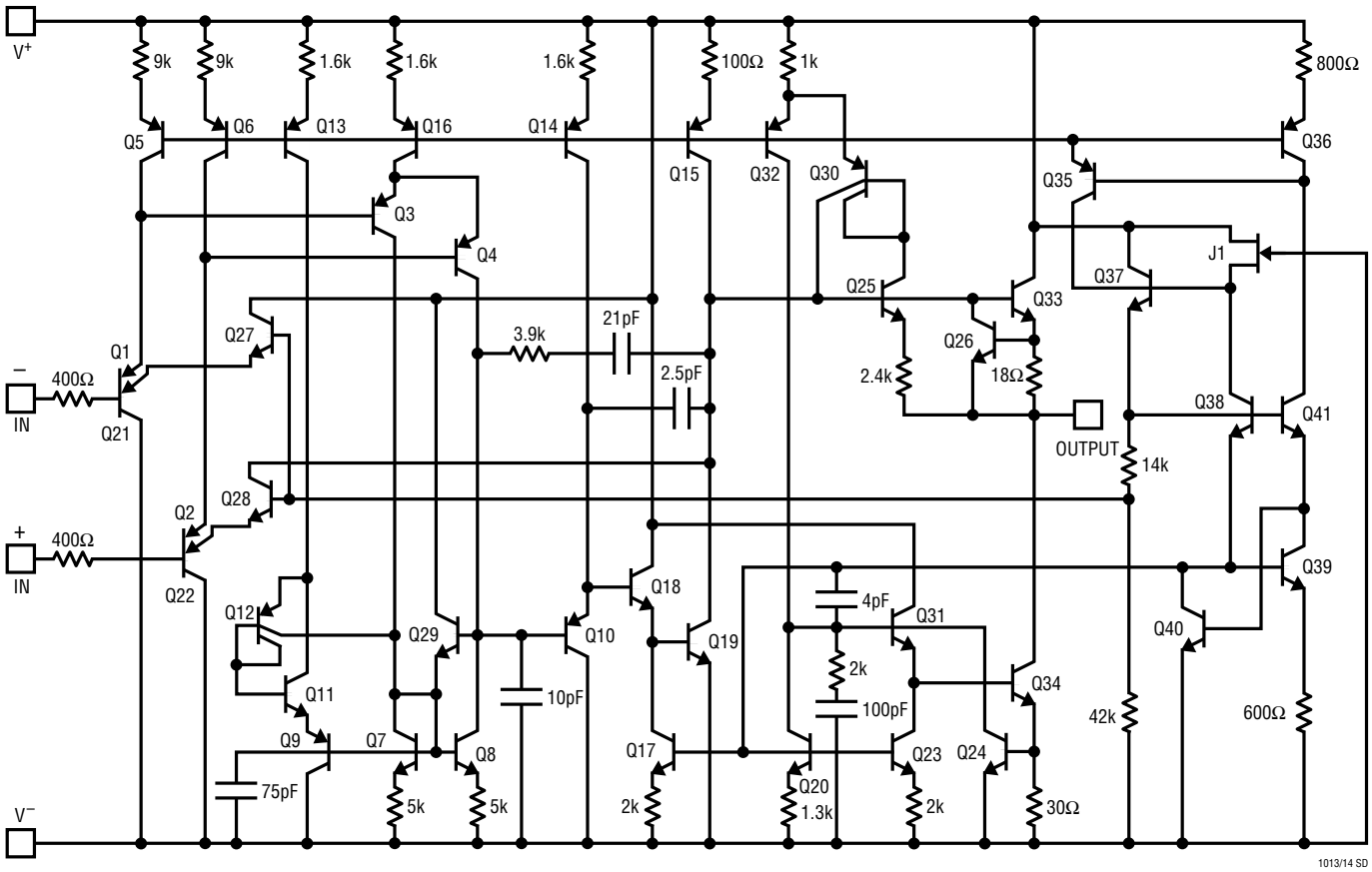

PACKAGE DESCRIPTION

Please refer to http://www.linear.com/product/LT1013#packaging for the most recent package drawings.

H Package
8-Lead TO-5 Metal Can (.200 Inch PCD)
(Reference LTC DWG # 05-08-1320)

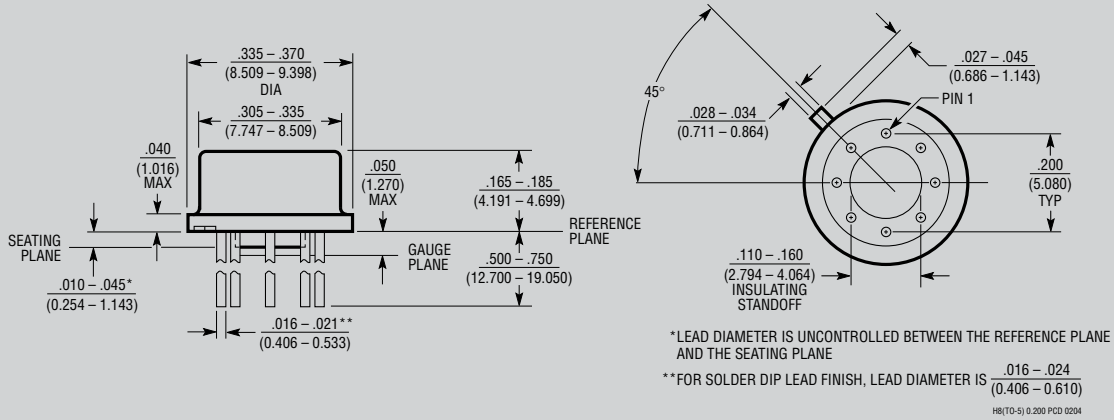

J8 Package
8-Lead CERDIP (Narrow .300 Inch, Hermetic)
(Reference LTC DWG # 05-08-1110)

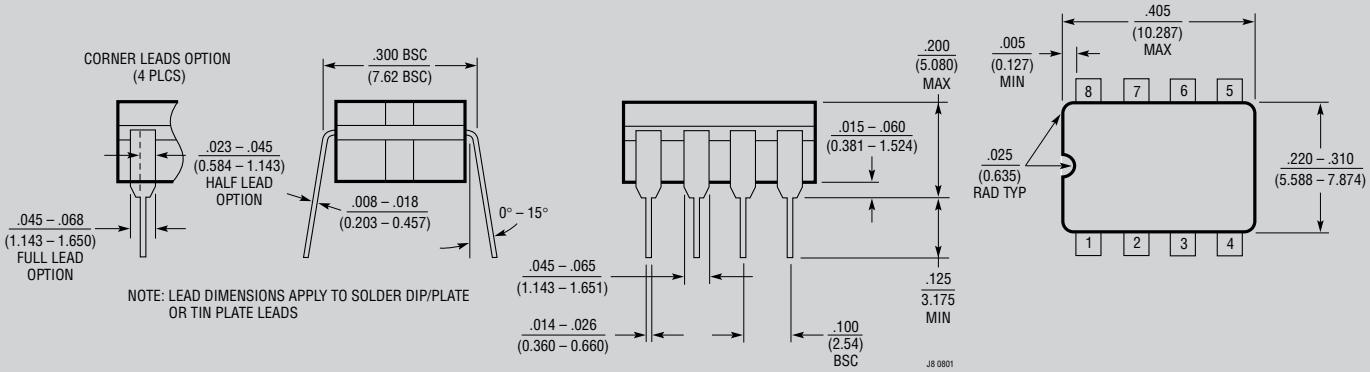

J Package
14-Lead CERDIP (Narrow .300 Inch, Hermetic)
(Reference LTC DWG # 05-08-1110)

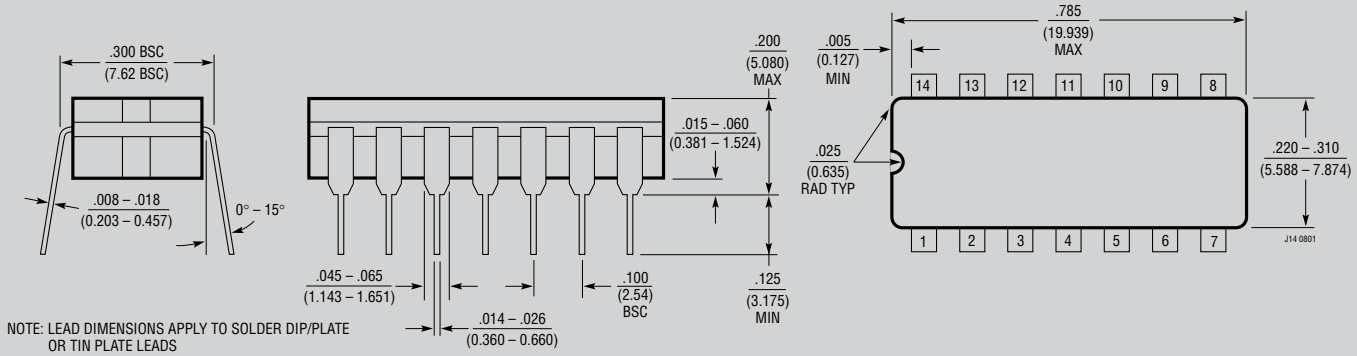

OBSOLETE PACKAGES

PACKAGE DESCRIPTION

Please refer to http://www.linear.com/product/LT1013#packaging for the most recent package drawings.

N8 Package
8-Lead PDIP (Narrow .300 Inch)
(Reference LTC DWG # 05-08-1510 Rev I)

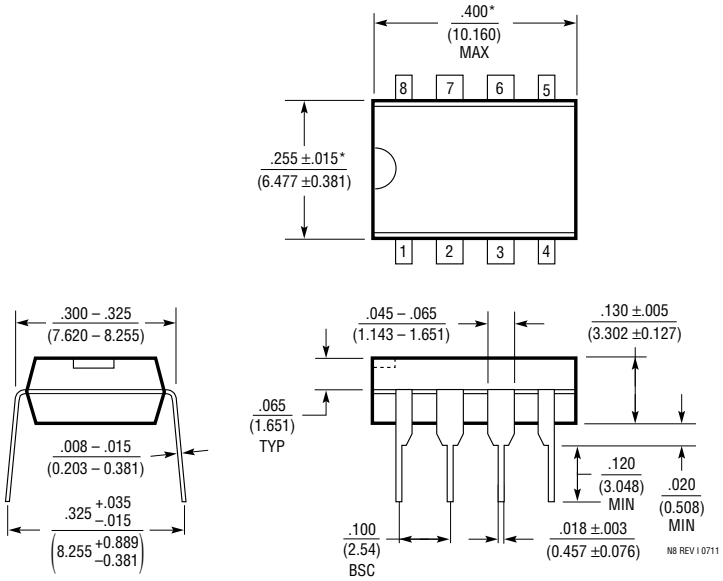

NOTE:
1. DIMENSIONS ARE $\frac{\text{INCHES}}{\text{MILLIMETERS}}$
*THESE DIMENSIONS DO NOT INCLUDE MOLD FLASH OR PROTRUSIONS.
MOLD FLASH OR PROTRUSIONS SHALL NOT EXCEED .010 INCH (0.254mm)

N Package
14-Lead PDIP (Narrow .300 Inch)
(Reference LTC DWG # 05-08-1510)

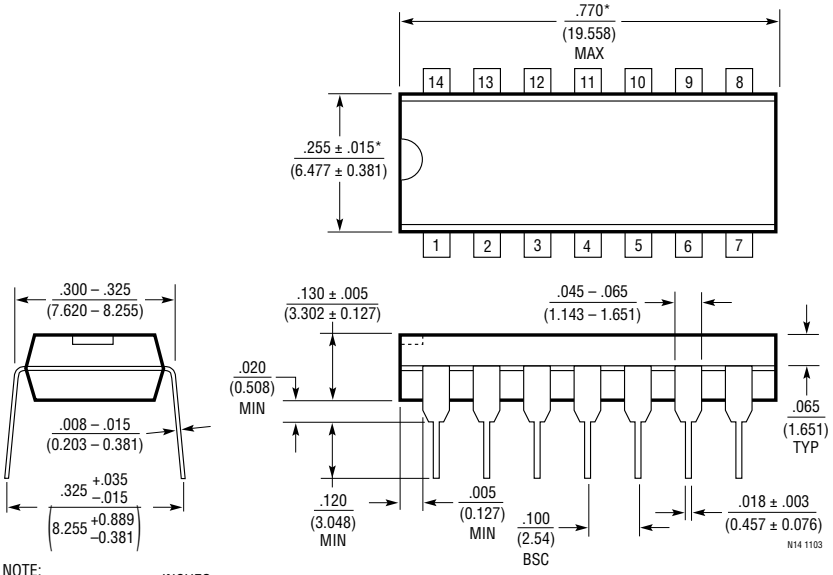

NOTE:
1. DIMENSIONS ARE $\frac{\text{INCHES}}{\text{MILLIMETERS}}$
*THESE DIMENSIONS DO NOT INCLUDE MOLD FLASH OR PROTRUSIONS.
MOLD FLASH OR PROTRUSIONS SHALL NOT EXCEED .010 INCH (0.254mm)

PACKAGE DESCRIPTION

Please refer to http://www.linear.com/product/LT1013#packaging for the most recent package drawings.

S8 Package
8-Lead Plastic Small Outline (Narrow .150 Inch)
(Reference LTC DWG # 05-08-1610 Rev G)

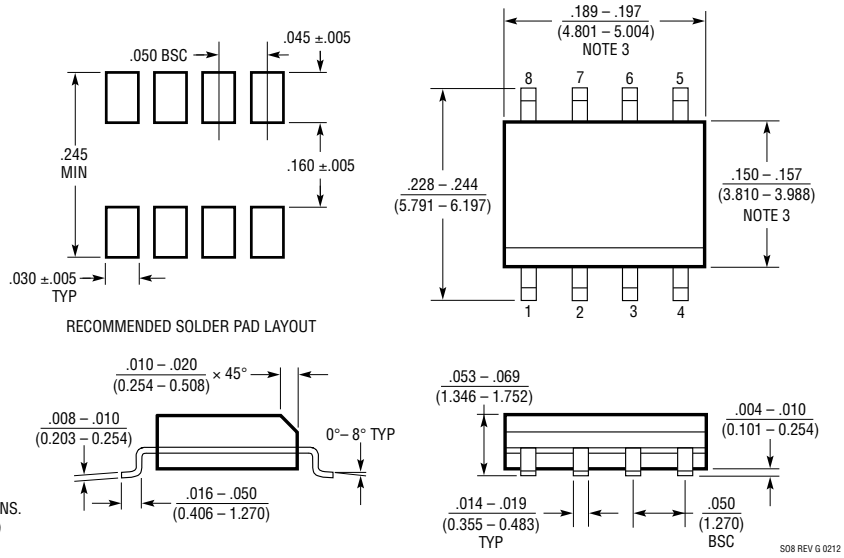

NOTE:
1. DIMENSIONS IN $\frac{\text{INCHES}}{\text{(MILLIMETERS)}}$
2. DRAWING NOT TO SCALE
3. THESE DIMENSIONS DO NOT INCLUDE MOLD FLASH OR PROTRUSIONS. MOLD FLASH OR PROTRUSIONS SHALL NOT EXCEED .006" (0.15mm)
4. PIN 1 CAN BE BEVEL EDGE OR A DIMPLE

SW Package
XX-Lead Plastic Small Outline (Wide .300 Inch)
(Reference LTC DWG # 05-08-1620)

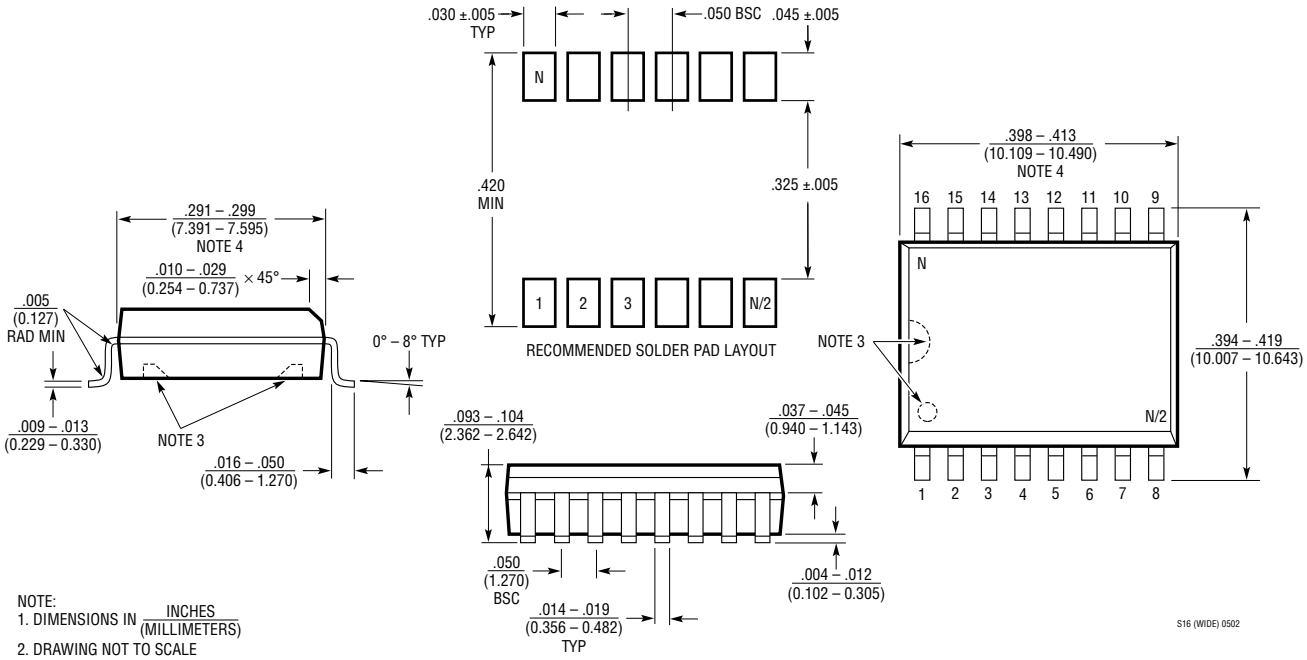

NOTE:
1. DIMENSIONS IN $\frac{\text{INCHES}}{\text{(MILLIMETERS)}}$
2. DRAWING NOT TO SCALE
3. PIN 1 IDENT, NOTCH ON TOP AND CAVITIES ON THE BOTTOM OF PACKAGES ARE THE MANUFACTURING OPTIONS. THE PART MAY BE SUPPLIED WITH OR WITHOUT ANY OF THE OPTIONS
4. THESE DIMENSIONS DO NOT INCLUDE MOLD FLASH OR PROTRUSIONS. MOLD FLASH OR PROTRUSIONS SHALL NOT EXCEED .006" (0.15mm)

REVISION HISTORY (Revision history begins at Rev D)

REV	DATE	DESCRIPTION	PAGE NUMBER
D	05/10	Updates to Typical Application “Hot-Wire Anemometer”	12
		Updated Related Parts	26
E	05/16	Corrected Package Drawing	24

Information furnished by Linear Technology Corporation is believed to be accurate and reliable. However, no responsibility is assumed for its use. Linear Technology Corporation makes no representation that the interconnection of its circuits as described herein will not infringe on existing patent rights.

TYPICAL APPLICATION

Step-Up Switching Regulator for 6V Battery

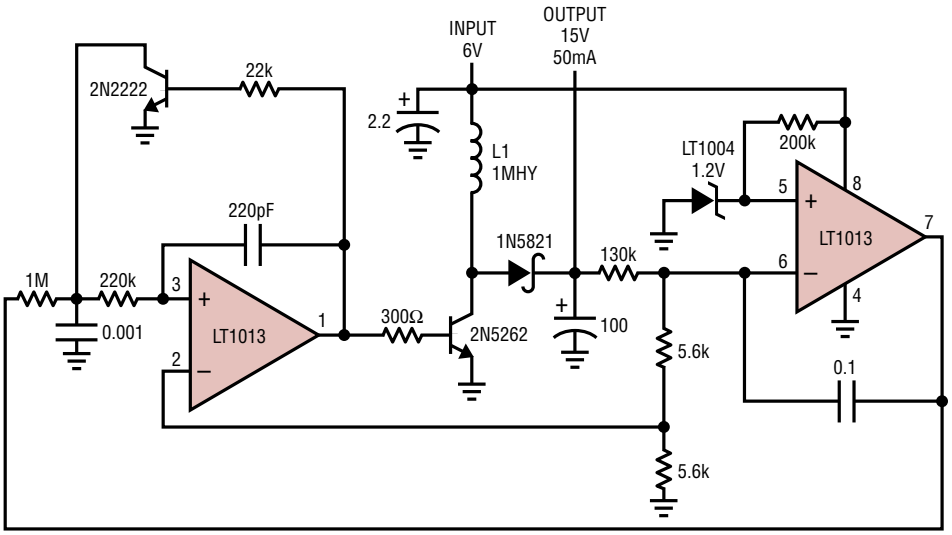

LT = AIE–VERNITRON 24–104
78% EFFICIENCY

1013/14 TA23

RELATED PARTS

PART NUMBER	DESCRIPTION	COMMENTS
LT2078/LT2079	Dual/Quad 50μA Single Supply Precision Amplifier	50μA Max I_S, 70μV Max V_{OS}
LT2178/LT2179	Dual/Quad 17μA Single Supply Precision Amplifier	17μA Max I_S, 70μV Max V_{OS}
LTC6081/LTC6082	Dual/Quad 400μA Precision Rail-to-Rail Amplifier	V_S = 2.7V to 6V, 400μA Max I_S, 70μV V_{OS} 0.8μV/°C TCV_{OS}
LTC6078/LTC6079	Dual/Quad 72μA Precision Rail-to-Rail Amplifier	V_S = 2.7V to 6V, 72μA Max I_S, 25μV V_{OS} 0.7μV/°C TCV_{OS}

Linear Technology Corporation
1630 McCarthy Blvd., Milpitas, CA 95035-7417
(408) 432-1900 • FAX: (408) 434-0507 • www.linear.com/LT1013
LT 0516 REV E • PRINTED IN USA
© LINEAR TECHNOLOGY CORPORATION 1990

OCEAN CHIPS
Океан Электроники
Поставка электронных компонентов

Компания «Океан Электроники» предлагает заключение долгосрочных отношений при поставках импортных электронных компонентов на взаимовыгодных условиях!

Наши преимущества:

- Поставка оригинальных импортных электронных компонентов напрямую с производств Америки, Европы и Азии, а так же с крупнейших складов мира;
- Широкая линейка поставок активных и пассивных импортных электронных компонентов (более 30 млн. наименований);
- Поставка сложных, дефицитных, либо снятых с производства позиций;
- Оперативные сроки поставки под заказ (от 5 рабочих дней);
- Экспресс доставка в любую точку России;
- Помощь Конструкторского Отдела и консультации квалифицированных инженеров;
- Техническая поддержка проекта, помощь в подборе аналогов, поставка прототипов;
- Поставка электронных компонентов под контролем ВП;
- Система менеджмента качества сертифицирована по Международному стандарту ISO 9001;
- При необходимости вся продукция военного и аэрокосмического назначения проходит испытания и сертификацию в лаборатории (по согласованию с заказчиком);
- Поставка специализированных компонентов военного и аэрокосмического уровня качества (Xilinx, Altera, Analog Devices, Intersil, Interpoint, Microsemi, Actel, Aeroflex, Peregrine, VPT, Syfer, Eurofarad, Texas Instruments, MS Kennedy, Miteq, Cobham, E2V, MA-COM, Hittite, Mini-Circuits, General Dynamics и др.);

Компания «Океан Электроники» является официальным дистрибьютором и эксклюзивным представителем в России одного из крупнейших производителей разъемов военного и аэрокосмического назначения **«JONHON»**, а так же официальным дистрибьютором и эксклюзивным представителем в России производителя высокотехнологичных и надежных решений для передачи СВЧ сигналов **«FORSTAR»**.

AVIC JONHON

«JONHON» (основан в 1970 г.)

Разъемы специального, военного и аэрокосмического назначения:

(Применяются в военной, авиационной, аэрокосмической, морской, железнодорожной, горно- и нефтедобывающей отраслях промышленности)

«FORSTAR» (основан в 1998 г.)

ВЧ соединители, коаксиальные кабели, кабельные сборки и микроволновые компоненты:

(Применяются в телекоммуникациях гражданского и специального назначения, в средствах связи, РЛС, а так же военной, авиационной и аэрокосмической отраслях промышленности).

FORSTAR®

Телефон: 8 (812) 309-75-97 (многоканальный)
Факс: 8 (812) 320-03-32
Электронная почта: ocean@oceanchips.ru
Web: http://oceanchips.ru/
Адрес: 198099, г. Санкт-Петербург, ул. Калинина, д. 2, корп. 4, лит. А