GENERAL SPECIFICATIONS

Electrical Capacity

Resistive Load: HS13: 6A @ 125V AC, 3A @ 250V AC, or 5A @ 30V DC
HS16: 12A @ 125V AC or 6A @ 250V AC
TS: 6A @ 125/250V AC
PS: 30A @ 125/250V AC

Other Ratings

Contact Resistance: 10 milliohms maximum
Insulation Resistance: 200 megohms minimum @ 500V DC
Dielectric Strength: 1,500V AC minimum for 1 minute minimum
Mechanical Life: HS: 15,000 operations minimum
TS: 30,000 operations minimum
PS: 10,000 operations minimum
Electrical Life: HS: 7,500 operations minimum
TS: 10,000 operations minimum
PS: 5,000 operations minimum
Indexing: 30° for HS16, TS & PS; 45° for HS13
Contact Timing: Nonshorting HS13; Shorting & Nonshorting HS16; Nonshorting TS; Nonshorting PS
Range of Operating Torque: HS16: 0.54 ~ 0.64Nm for first pole & 0.05Nm for each additional pole
HS13: 0.15 ~ 0.24Nm
TS: 0.09Nm for first pole & (0.07Nm x total number of poles) + 0.13Nm for additional poles
PS: 0.14Nm for each pole

Materials & Finishes

Knob: Phenolic resin
Shaft: HS13: brass; HS16, TS, & PS: brass with nickel plating
Bushing: HS13: brass; HS16, TS, & PS: brass with nickel plating
Case: Phenolic resin
Movable Contacts: HS13, HS16, & TS phosphor bronze; PS silver alloy
Stationary Contacts: HS13, HS16, & PS: brass with silver plating; TS: phosphor bronze
Terminals: HS: phosphor bronze; TS & PS: copper with silver plating

Environmental Data

Operating Temp Range: –10°C through +70°C (+14°F through +158°F)
Humidity: 90 ~ 98% humidity for 96 hours @ 40°C (104°F)
Vibration: 10 ~ 55 Hz with peak-to-peak amplitude of 1.5mm traversing the frequency range & returning in 1 minute; 3 right angled directions for 2 hours
Shock: 50G (490m/s^2) acceleration (tested in 3 right angled directions, with 3 shocks in each direction)

Installation

Mounting Torque: 2.94Nm (26 lb•in)
Maximum Panel Thickness: Shown with panel cutouts in following drawings
Soldering Time & Temperature: Manual Soldering (HS series only): See Profile A in Supplement section.

Standards & Certifications

UL: **File No. E44145 - Recognized only when ordered with marking on switch.**
Add "/U" or "/CUL" to end of part number to order UL recognized switch.
HS16 models 1– through 6–pole are recognized at 12A @ 125V AC & 6A @ 250V AC
See Supplement section to find UL or cULus rating details.

6 AMP SINGLE POLE/NONSHORTING/45° INDEXING

Round Shaft	D-flat Shaft	Number of Positions	Stopper Settings	Number of Terminals *	Load Terminals
HS13X	HS13X-D	2	Fixed	1 COM, 2 LOAD	1 & 2
HS13Y	HS13Y-D	3	Fixed	1 COM, 3 LOAD	1, 2, & 3
HS13Z	HS13Z-D	4	Fixed	1 COM, 4 LOAD	1, 2, 3, & 4

Schematics

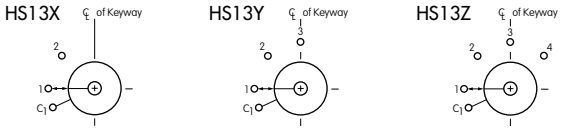

Switch is viewed from shaft end and shown in position 1. Terminal numbers are not on switch. Standard Hardware shown on last page of this section.
* Wire harness & cable assemblies offered only in Americas.

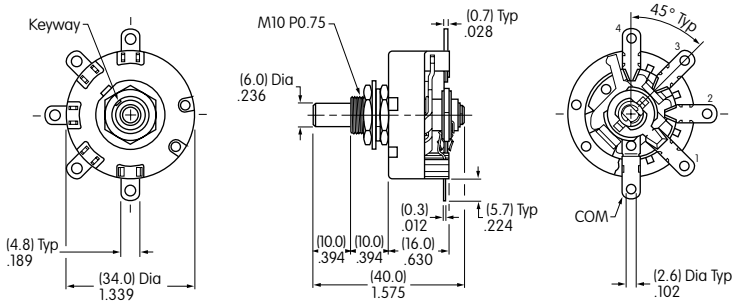

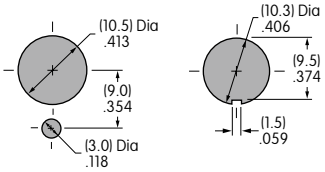

Maximum Effective Panel Thickness
With Locking Ring
.150" (3.8mm)
Without Locking Ring
.189" (4.8mm)

HS13X

12 AMP/SHORTING & NONSHORTING/30° INDEXING

Knurled Shaft		D-flat Shaft						
Nonshorting	Shorting	Nonshorting	Shorting	Pole	Number of Positions	Stopper Settings	Number of Terminals *	Schematic
HS16-1	HS16-1S	HS16-1N	HS16-1SN	1P	2-11	2, 3, 4 . . . 11	1 COM, 11 LOAD	
HS16-2	HS16-2S	HS16-2N	HS16-2SN	2P	2-11	2, 3, 4 . . . 11	2 COM, 22 LOAD	
HS16-3	HS16-3S	HS16-3N	HS16-3SN	3P	2-11	2, 3, 4 . . . 11	3 COM, 33 LOAD	
HS16-4	HS16-4S	HS16-4N	HS16-4SN	4P	2-11	2, 3, 4 . . . 11	4 COM, 44 LOAD	
HS16-5	HS16-5S	HS16-5N	HS16-5SN	5P	2-11	2, 3, 4 . . . 11	5 COM, 55 LOAD	
HS16-6	HS16-6S	HS16-6N	HS16-6SN	6P	2-11	2, 3, 4 . . . 11	6 COM, 66 LOAD	

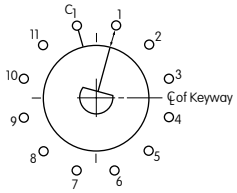

Switch is viewed from shaft end and shown in position 1. Terminal numbers are not on switch. Standard Hardware shown on last page of this section.
* Wire harness & cable assemblies offered only in Americas.

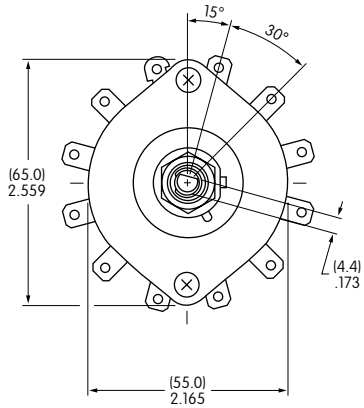

Maximum Effective Panel Thickness
With Locking Ring
.189" (4.8mm)
Without Locking Ring
.228" (5.8mm)

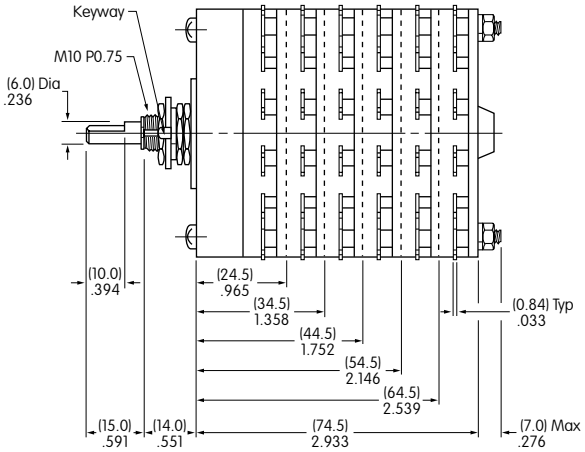

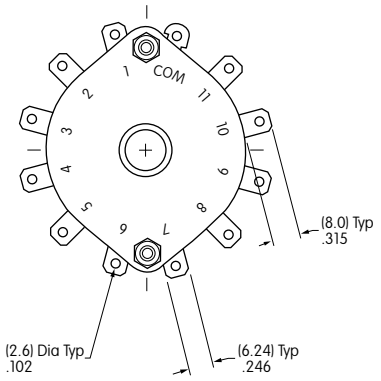

- On each deck of multipole devices common and load terminals are in the same positions as shown in the schematic above.
- Switch is viewed from the shaft end and shown in position 1.
- Terminal numbers are on the switch bottom. Stopper positions are molded on the top of the switch.
- Standard Hardware shown on last page of this section.

HS16-2N

6 AMP/NONSHORTING/ADJUSTABLE STOP/30° INDEXING

Model	Pole	Number of Positions	Stopper Settings	Number of Terminals	Shaft Type	Schematic
TS1N	1P	2-11	2, 3, 4 . . . 11	1 COM, 11 LOAD	D Flat	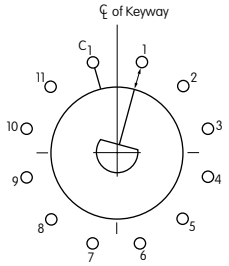 On each deck of multipole devices common & load terminals are in the same positions as shown in this schematic. Switch is viewed from the shaft end and shown in position 1. Terminal numbers are on the switch bottom. Stopper positions are molded on the top of the switch.
TS2N	2P	2-11	2, 3, 4 . . . 11	2 COM, 22 LOAD	D Flat	
TS3N	3P	2-11	2, 3, 4 . . . 11	3 COM, 33 LOAD	D Flat	
TS4N	4P	2-11	2, 3, 4 . . . 11	4 COM, 44 LOAD	D Flat	
TS5N	5P	2-11	2, 3, 4 . . . 11	5 COM, 55 LOAD	D Flat	

- Standard Hardware shown on last page of this section.

Panel Cutouts

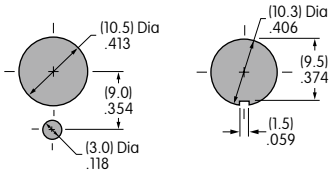

Maximum Effective Panel Thickness
With Locking Ring
.189" (4.8mm)
Without Locking Ring
.228" (5.8mm)

Top

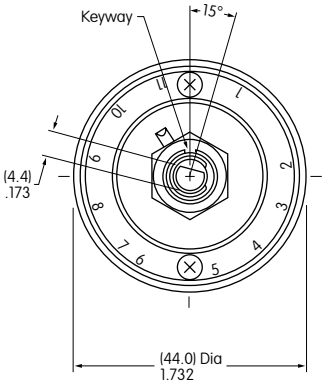

Bottom

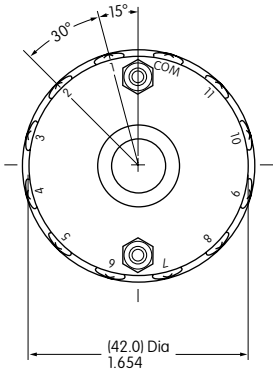

TS5N

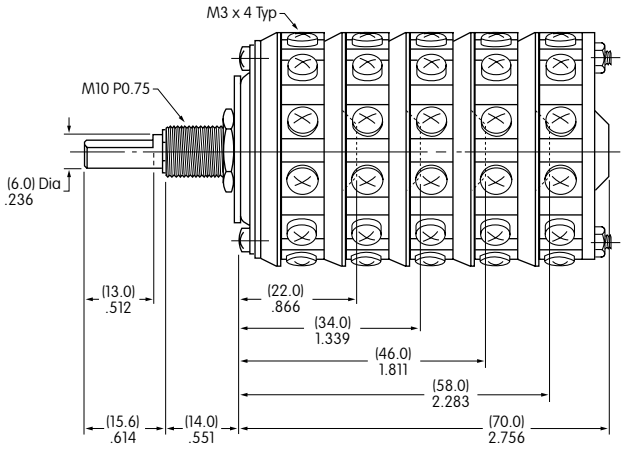

30 AMP/NONSHORTING/ADJUSTABLE STOP/30° INDEXING

Knurled Shaft	D Flat Shaft	Pole	Number of Positions	Stopper Settings	Number of Terminals	Schematic
PS1	**PS1N**	1P	2-11	2, 3, 4 . . . 11	1 COM, 11 LOAD	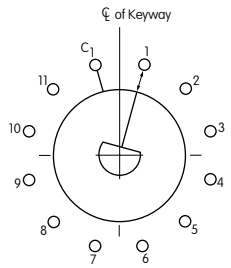
PS2	**PS2N**	2P	2-11	2, 3, 4 . . . 11	2 COM, 22 LOAD	
PS3	**PS3N**	3P	2-11	2, 3, 4 . . . 11	3 COM, 33 LOAD	
PS4	**PS4N**	4P	2-11	2, 3, 4 . . . 11	4 COM, 44 LOAD	
PS5	**PS5N**	5P	2-11	2, 3, 4 . . . 11	5 COM, 55 LOAD	

On each deck of multipole devices common & load terminals are in the same positions as shown in this schematic. Switch is viewed from the shaft end and shown in position 1. Terminal numbers are on switch bottom. Stopper positions are molded on the top of the switch.

- Standard Hardware shown on last page of this section.

Panel Cutout

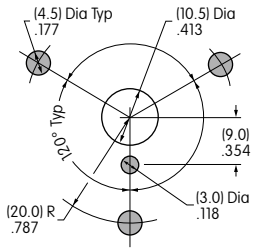

Maximum Effective Panel Thickness
Without Locking Ring
.189" (4.8mm)

Top

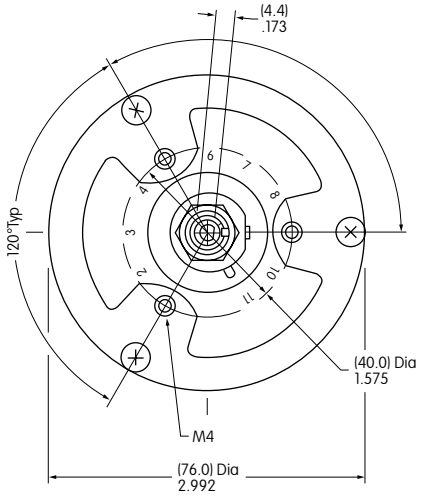

Bottom

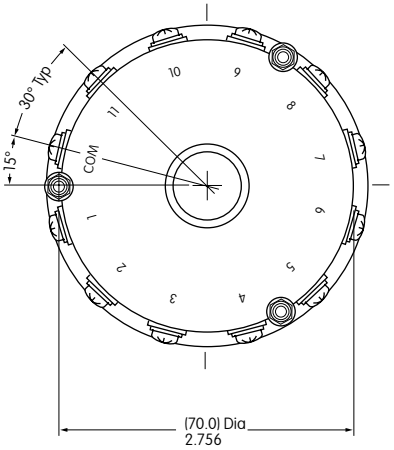

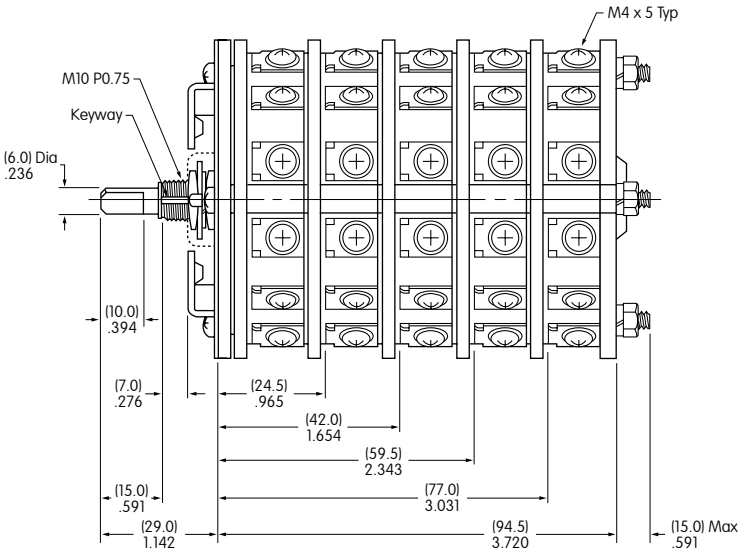

PS4N

SHAFT TYPES

D Flat Shaft

For use with
AT431 and AT432

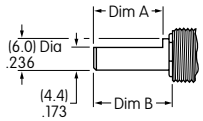

Dimension A		Dimension B	
For TS	(13.0) .512	For TS	(15.6) .614
For HS or PS	(10.0) .394	For HS or PS	(15.0) .591

Knurled Shaft

Not for use with
AT431 or AT432

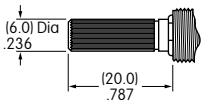

OPTIONAL KNOBS FOR D FLAT SHAFTS

AT431
Large Knob

Phenolic Resin

Black only with white indicator line

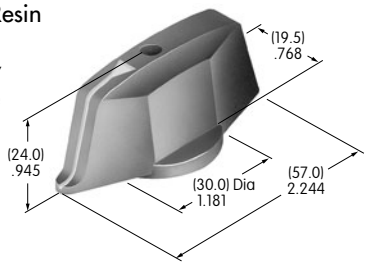

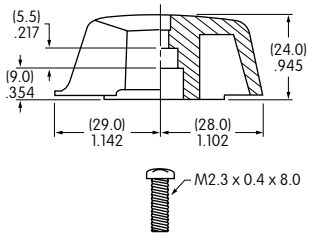

AT432
Small Knob

Phenolic Resin

Black only with white indicator line

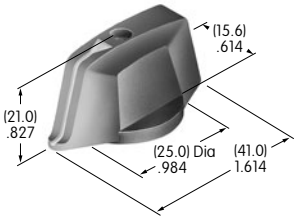

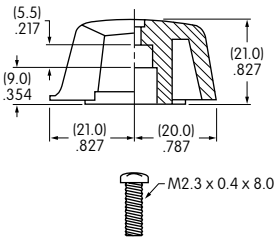

Knob Orientation

The rotary knobs used on the D-flat shafts can be oriented on the switch to suit the customer's particular front panel needs simply by sliding the knob over the square adaptor at the preferred orientation.

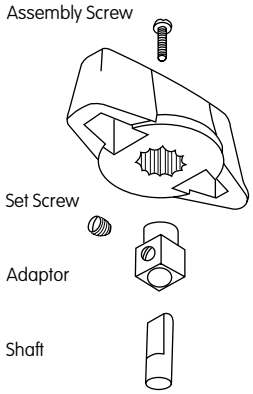

STOPPER SETTING

For HS16, TS, & PS Models

The HS16, TS, and PS switches are supplied with the stopper plate set for the maximum number of positions allowed for that model. Prior to installation, the desired stopper setting should be made:

1. Be sure the shaft is turned counterclockwise to the extreme left. If the shaft is not turned counterclockwise to the extreme left, proper setting cannot be achieved.
2. Loosen the nut far enough to allow raising the stopper plate for resetting.
3. Insert the stopper in the numbered hole for the desired stopper setting. Satisfactory switch functioning cannot be assured if the stopper plate is not properly positioned.
4. Tighten the nut firmly against the stopped plate.

Standard Hardware Supplied with HS, TS, and PS:

AT526 Hex Mounting Nut (quantity 3)
AT518 Locking Ring (quantity 1)
AT520 Split Lockwasher (quantity 1)
Use of mounting supports on PS is optional; screws are not provided.

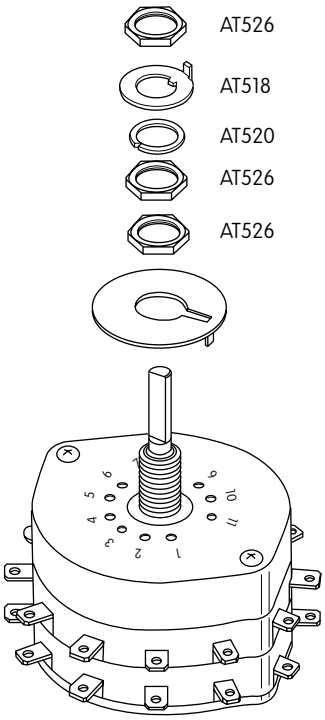

OCEAN CHIPS
Океан Электроники
Поставка электронных компонентов

Компания «Океан Электроники» предлагает заключение долгосрочных отношений при поставках импортных электронных компонентов на взаимовыгодных условиях!

Наши преимущества:

- Поставка оригинальных импортных электронных компонентов напрямую с производств Америки, Европы и Азии, а так же с крупнейших складов мира;
- Широкая линейка поставок активных и пассивных импортных электронных компонентов (более 30 млн. наименований);
- Поставка сложных, дефицитных, либо снятых с производства позиций;
- Оперативные сроки поставки под заказ (от 5 рабочих дней);
- Экспресс доставка в любую точку России;
- Помощь Конструкторского Отдела и консультации квалифицированных инженеров;
- Техническая поддержка проекта, помощь в подборе аналогов, поставка прототипов;
- Поставка электронных компонентов под контролем ВП;
- Система менеджмента качества сертифицирована по Международному стандарту ISO 9001;
- При необходимости вся продукция военного и аэрокосмического назначения проходит испытания и сертификацию в лаборатории (по согласованию с заказчиком);
- Поставка специализированных компонентов военного и аэрокосмического уровня качества (Xilinx, Altera, Analog Devices, Intersil, Interpoint, Microsemi, Actel, Aeroflex, Peregrine, VPT, Syfer, Eurofarad, Texas Instruments, MS Kennedy, Miteq, Cobham, E2V, MA-COM, Hittite, Mini-Circuits, General Dynamics и др.);

Компания «Океан Электроники» является официальным дистрибьютором и эксклюзивным представителем в России одного из крупнейших производителей разъемов военного и аэрокосмического назначения **«JONHON»**, а так же официальным дистрибьютором и эксклюзивным представителем в России производителя высокотехнологичных и надежных решений для передачи СВЧ сигналов **«FORSTAR»**.

AVIC JONHON

«JONHON» (основан в 1970 г.)

Разъемы специального, военного и аэрокосмического назначения:

(Применяются в военной, авиационной, аэрокосмической, морской, железнодорожной, горно- и нефтедобывающей отраслях промышленности)

«FORSTAR» (основан в 1998 г.)

ВЧ соединители, коаксиальные кабели, кабельные сборки и микроволновые компоненты:

(Применяются в телекоммуникациях гражданского и специального назначения, в средствах связи, РЛС, а так же военной, авиационной и аэрокосмической отраслях промышленности).

FORSTAR®

Телефон: 8 (812) 309-75-97 (многоканальный)
Факс: 8 (812) 320-03-32
Электронная почта: ocean@oceanchips.ru
Web: http://oceanchips.ru/
Адрес: 198099, г. Санкт-Петербург, ул. Калинина, д. 2, корп. 4, лит. А