Atmel AT97SC3204

Trusted Platform Module LPC Interface

SUMMARY DATASHEET

Features

- Fully compliant to the Trusted Computing Group (TCG) Trusted Platform Module (TPM) version 1.2 specification
- Compliant with TCG PC client-specific TPM Interface Specification (TIS) version 1.2
- Single-chip, turnkey solution
- Hardware asymmetric crypto engine
- Atmel® AVR® RISC microprocessor
- Internal EEPROM storage for RSA keys
- 33MHz Low Pin Count (LPC) bus for easy PC interface
- Secure hardware and firmware design and chip layout
- Internal, high-quality Random Number Generator (RNG) – FIPS 140-2 compliant
- NV storage space for 1756 bytes of user defined data
- 3.3V supply voltage
- 28-lead thin TSSOP, 28-lead wide TSSOP, or 40-pad QFN packages
- Offered in both commercial (0 to 70°C) and industrial (-40 to +85°C) temperature ranges

Description

The Atmel AT97SC3204 is a fully integrated security module designed to be integrated into personal computers and other embedded systems. It implements version 1.2 of the Trusted Computing Group (TCG) specification for Trusted Platform Modules (TPM).

The TPM includes a cryptographic accelerator capable of computing a 2048-bit RSA signature in 200ms and a 1024-bit RSA signature in 40ms. Performance of the SHA-1 accelerator is 20µs per 64-byte block.

The chip communicates with the PC through the LPC interface. The TPM supports SIRQ (for interrupts) and CLKRUN to permit clock stopping for power savings in mobile computers.

This is a summary document. The complete document is available under NDA. For more information, please contact your local Atmel sales office.

1. Pin Configurations and Pinouts

Table 1-1. Pin Configurations

Pin name	Function
V_{CC}	3.3V Supply Voltage
SB3V	Standby 3.3V Supply Voltage
GND	Ground
LRESET#	PCI Reset Input Active Low
LAD0	LPC Command, Address, Data Line Input/Output
LAD1	LPC Command, Address, Data Line Input/Output
LAD2	LPC Command, Address, Data Line Input/Output
LAD3	LPC Command, Address, Data Line Input/Output
LCLK	33MHz PCI Clock Input
LFRAME#	LPC FRAME Input
CLKRUN#	PCI Clock Run Input/Output
LPCPD#	LPC Power-Down Input
SERIRQ	Serialized Interrupt Request Input/Output
GPIO-Express-00	GPIO assigned to TPM_NV_INDEX_GPIO_00
TestI	Test Input (Disabled)
TestBI	Test Input (Disabled)
ATest	Atmel Test Pin
NC	No Connect
NBO	Not Bounded Out

Table 1-2. Pinouts

28-pin TSSOP
4.4mm x 9.7mm Body
0.65mm Pitch

28-pin TSSOP
6.1mm x 9.7mm Body
0.65mm Pitch

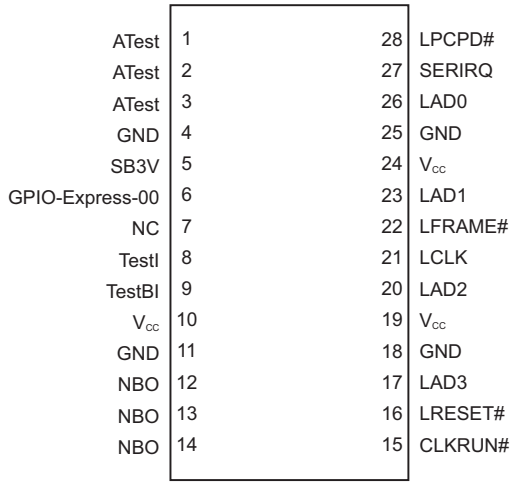

40-pin QFN
6.0mm x 6.0mm Body
0.50mm Pitch

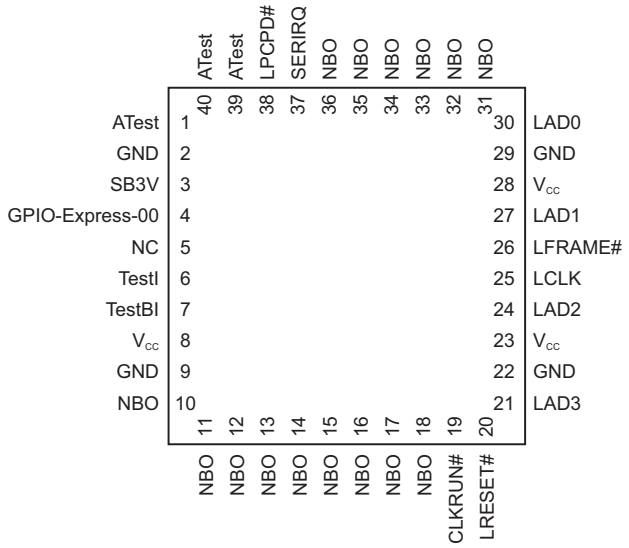

2. Block Diagram

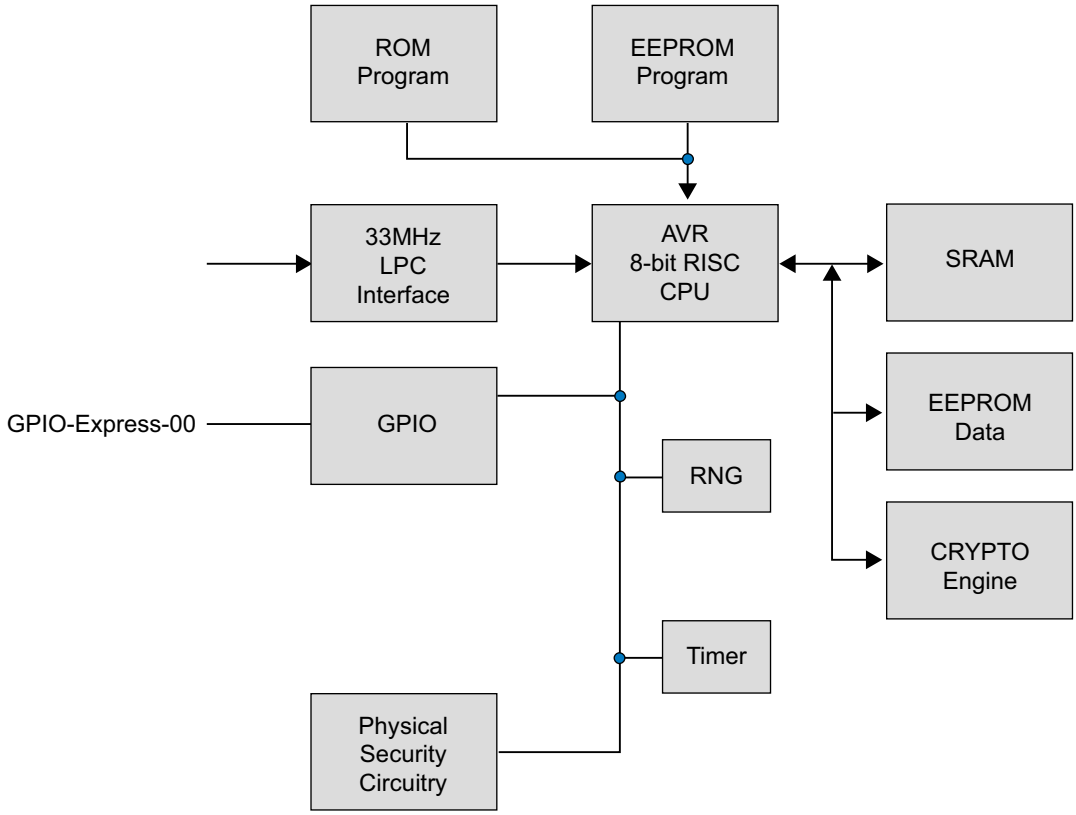

The TPM includes a hardware random number generator, including a FIPS-approved Pseudo Random Number Generator that is used for key generation and TCG protocol functions. The RNG is also available to the system to generate random numbers that may be needed during normal operation.

The chip uses a dynamic internal memory management scheme to store multiple RSA keys. Other than the standard TCG commands (TPM_FlushSpecific, TPM_Loadkey2), no system intervention is required to manage this internal key cache.

The TPM is offered to OEM and ODM manufacturers as a turnkey solution, including the firmware integrated on the chip. In addition, Atmel provides the necessary device driver software for integration into certain operating systems, along with BIOS drivers. Atmel will also provide manufacturing support software for use by OEMs and ODMs during initialization and verification of the TPM during board assembly.

Full documentation for TCG primitives can be found in the TCG TPM Main Specification, Parts 1 to 3, on the TCG Web site located at https://www.trustedcomputinggroup.org. TPM features specific to PC Client platforms are specified in the “TCG PC Client Specific TPM Interface Specification, Version 1.2”, also available on the TCG web site. Implementation guidance for 32-bit PC platforms is outlined in the “TCG PC Client Specific Implementation Specification for Conventional BIOS for TCG Version 1.2”, also available on the TCG website.

3. Ordering Information

Atmel Ordering Code	Package		Operating Range
AT97SC3204[(1)]	28X1 (28-pin thin TSSOP)	Lead-free, RoHS	Commercial (0°C to 70°C) Industrial (-40°C to 85°C)
AT97SC3204[(1)]	40ML1 (40-pin QFN)		

Note: 1. Please see the AT97SC3204 datasheet addendum for the complete catalog number ordering code.

Package Type	
28X1	28-lead, 4.4mm body width, Plastic Thin Shrink Small Outline (thin TSSOP)
40ML1	40-pad 6.0 x 6.0x0.9mm body, 0.50mm pitch, Very-thin Quad Flat No Lead (VQFN)

4. Package Drawings

4.1 28X1 — 28-lead Thin TSSOP

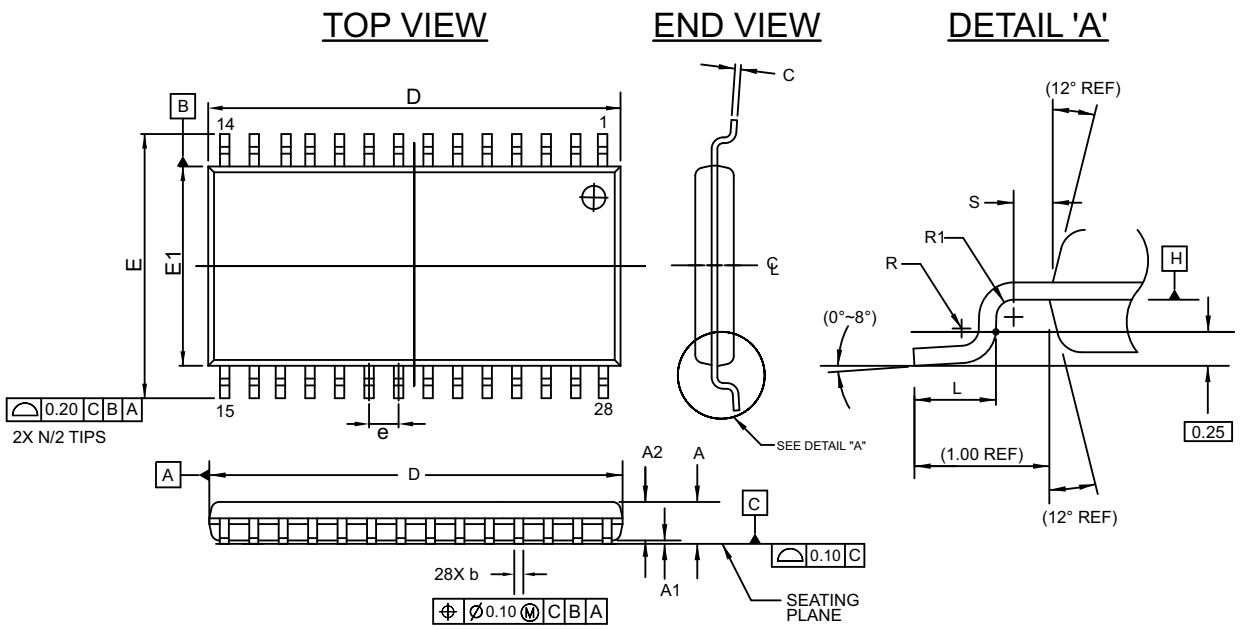

COMMON DIMENSIONS
(UNIT OF MEASURE=MM)

SYMBOL	MIN	NOM	MAX	NOTE
A	-	-	1.10	
A1	0.05	-	0.15	
A2	0.85	0.90	0.95	
b	0.19	-	0.30	2
c	0.09	-	0.20	
D	9.60	9.70	9.80	1
E	6.40BSC			
E1	4.30	4.40	4.50	1
e	0.65 BSC			
L	0.45	0.60	0.75	
R	0.09	-	-	
R1	0.09	-	-	
S	0.20	-	-	

Note:

1. Refer to JEDEC drawing MO-153,variation AE
2. Dimension D does not include mold flash, protrusions or gate burrs. Mold flash,protrusions or gate burrs shall not exceed 0.15mm per end. Dimension E1 does not include interlead flash or protrusion. Interlead flash or protrusion shall not exceed 0.25mm per side.
3. Dimension "b" does not include dambar protrusion. Allowable dambar protrusion shall be 0.08mm total in excess of the "b" dimension at maximum material condition. Minimum space between protrusion and adjacent lead is 0.07mm.

7/8/2011

Atmel Package Drawing Contact: packagedrawings@atmel.com	TITLE 28X1, 28-lead, 4.4mm Body Width, Plastic Thin Shrink Small Outline Package (TSSOP)	GPC TFL	DRAWING NO. 28X1	REV. A

4.2 40ML1 — 40-pad VQFN

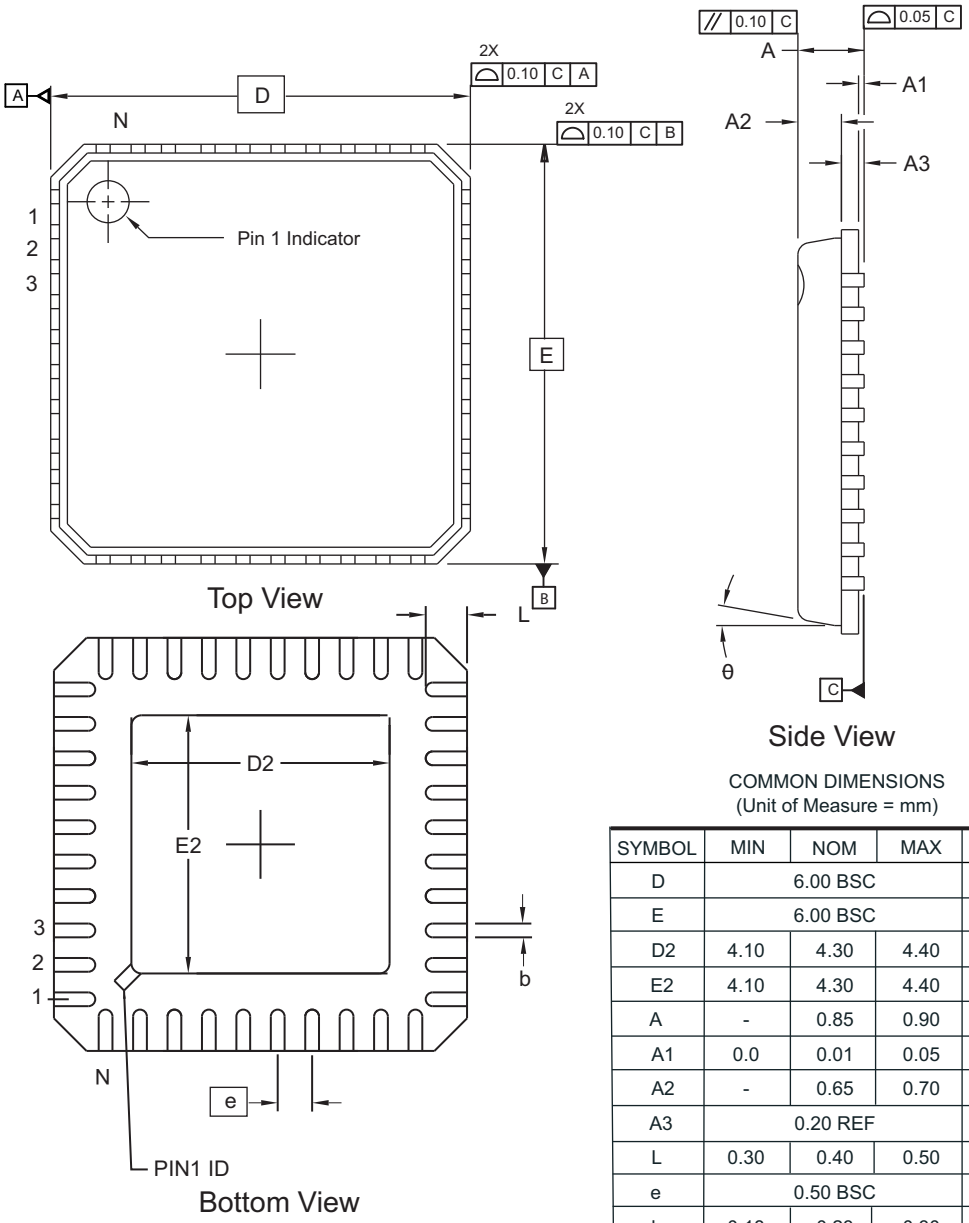

COMMON DIMENSIONS
(Unit of Measure = mm)

SYMBOL	MIN	NOM	MAX	NOTE
D		6.00 BSC		
E		6.00 BSC		
D2	4.10	4.30	4.40	
E2	4.10	4.30	4.40	
A	-	0.85	0.90	
A1	0.0	0.01	0.05	
A2	-	0.65	0.70	
A3		0.20 REF		
L	0.30	0.40	0.50	
e		0.50 BSC		
b	0.18	0.23	0.30	2

Notes:
1. This drawing is for general information only. Refer to JEDEC Drawing MO-220, Variation WJJD-2, for proper dimensions, tolerances, datums, etc.
2. Dimension b applies to metallized terminal and is measured between 0.15 mm and 0.30 mm from the terminal tip. If the terminal has the optional radius on the other end of the terminal, the dimension should not be measured in that radius area.

09/23/11

Atmel Package Drawing Contact: packagedrawings@atmel.com	TITLE 40ML1, 40-pad 6.0 x 6.0x0.9 mm Body, 0.50 mm pitch, Very-Thin Quad Flat No Lead Package (VQFN) Punched	GPC ZJI	DRAWING NO. 40ML1	REV. D

5. Revision History

Doc. Rev.	Date	Comments
5295ES	03/2013	Removed bullet from features: 2048-bit RSA® sign in 200ms. Updated footers and disclaimer page.
5295DS	12/2012	Changed GPIO6 to GPIO-Express-00. Updated package drawings 28A3 and 40ML1. Updated package drawing 28A1 to 28X1. Updated template and Atmel logos.
5295CS	03/2011	Corrected header and footers.
5295BS	10/2010	Added Industrial Grade support detail.
5295AS	01/2008	Initial document release.

Enabling Unlimited Possibilities®

Atmel Corporation 1600 Technology Drive, San Jose, CA 95110 USA **T:** (+1)(408) 441.0311 **F:** (+1)(408) 436.4200 | **www.atmel.com**

© 2013 Atmel Corporation. All rights reserved. / Rev.: Atmel-5295ES-TPM-AT97SC3204-LPC-Interface-Datasheet-Summary-032013

Atmel®, Atmel logo and combinations thereof, Enabling Unlimited Possibilities®, AVR®, and others are registered trademarks or trademarks of Atmel Corporation or its subsidiaries. Other terms and product names may be trademarks of others.

Disclaimer: The information in this document is provided in connection with Atmel products. No license, express or implied, by estoppel or otherwise, to any intellectual property right is granted by this document or in connection with the sale of Atmel products. EXCEPT AS SET FORTH IN THE ATMEL TERMS AND CONDITIONS OF SALES LOCATED ON THE ATMEL WEBSITE, ATMEL ASSUMES NO LIABILITY WHATSOEVER AND DISCLAIMS ANY EXPRESS, IMPLIED OR STATUTORY WARRANTY RELATING TO ITS PRODUCTS INCLUDING, BUT NOT LIMITED TO, THE IMPLIED WARRANTY OF MERCHANTABILITY, FITNESS FOR A PARTICULAR PURPOSE, OR NON-INFRINGEMENT. IN NO EVENT SHALL ATMEL BE LIABLE FOR ANY DIRECT, INDIRECT, CONSEQUENTIAL, PUNITIVE, SPECIAL OR INCIDENTAL DAMAGES (INCLUDING, WITHOUT LIMITATION, DAMAGES FOR LOSS AND PROFITS, BUSINESS INTERRUPTION, OR LOSS OF INFORMATION) ARISING OUT OF THE USE OR INABILITY TO USE THIS DOCUMENT, EVEN IF ATMEL HAS BEEN ADVISED OF THE POSSIBILITY OF SUCH DAMAGES. Atmel makes no representations or warranties with respect to the accuracy or completeness of the contents of this document and reserves the right to make changes to specifications and products descriptions at any time without notice. Atmel does not make any commitment to update the information contained herein. Unless specifically provided otherwise, Atmel products are not suitable for, and shall not be used in, automotive applications. Atmel products are not intended, authorized, or warranted for use as components in applications intended to support or sustain life.

OCEAN CHIPS
Океан Электроники
Поставка электронных компонентов

Компания «Океан Электроники» предлагает заключение долгосрочных отношений при поставках импортных электронных компонентов на взаимовыгодных условиях!

Наши преимущества:

- Поставка оригинальных импортных электронных компонентов напрямую с производств Америки, Европы и Азии, а так же с крупнейших складов мира;
- Широкая линейка поставок активных и пассивных импортных электронных компонентов (более 30 млн. наименований);
- Поставка сложных, дефицитных, либо снятых с производства позиций;
- Оперативные сроки поставки под заказ (от 5 рабочих дней);
- Экспресс доставка в любую точку России;
- Помощь Конструкторского Отдела и консультации квалифицированных инженеров;
- Техническая поддержка проекта, помощь в подборе аналогов, поставка прототипов;
- Поставка электронных компонентов под контролем ВП;
- Система менеджмента качества сертифицирована по Международному стандарту ISO 9001;
- При необходимости вся продукция военного и аэрокосмического назначения проходит испытания и сертификацию в лаборатории (по согласованию с заказчиком);
- Поставка специализированных компонентов военного и аэрокосмического уровня качества (Xilinx, Altera, Analog Devices, Intersil, Interpoint, Microsemi, Actel, Aeroflex, Peregrine, VPT, Syfer, Eurofarad, Texas Instruments, MS Kennedy, Miteq, Cobham, E2V, MA-COM, Hittite, Mini-Circuits, General Dynamics и др.);

Компания «Океан Электроники» является официальным дистрибьютором и эксклюзивным представителем в России одного из крупнейших производителей разъемов военного и аэрокосмического назначения **«JONHON»**, а так же официальным дистрибьютором и эксклюзивным представителем в России производителя высокотехнологичных и надежных решений для передачи СВЧ сигналов **«FORSTAR»**.

AVIC JONHON

«JONHON» (основан в 1970 г.)

Разъемы специального, военного и аэрокосмического назначения:

(Применяются в военной, авиационной, аэрокосмической, морской, железнодорожной, горно- и нефтедобывающей отраслях промышленности)

«FORSTAR» (основан в 1998 г.)

ВЧ соединители, коаксиальные кабели, кабельные сборки и микроволновые компоненты:

(Применяются в телекоммуникациях гражданского и специального назначения, в средствах связи, РЛС, а так же военной, авиационной и аэрокосмической отраслях промышленности).

FORSTAR®

Телефон: 8 (812) 309-75-97 (многоканальный)
Факс: 8 (812) 320-03-32
Электронная почта: ocean@oceanchips.ru
Web: http://oceanchips.ru/
Адрес: 198099, г. Санкт-Петербург, ул. Калинина, д. 2, корп. 4, лит. А