MLX92215-AAA

3-Wire Hall Effect Latch

Features and Benefits

- Wide operating voltage range : from 2.7V to 24V
- Chopper-stabilized amplifier stage
- Built-in negative temperature coefficient
- Reverse Supply Voltage Protection
- High ESD rating / Excellent EMC performance

Application Examples

- Consumer and Industrial
- Solid-state switch
- E-Bike
- Motorcycles
- 3-phase BLDC motor commutation

Ordering Information

Part No.	Temperature Code	Package Code	Comment
MLX92215LUA-AAA-000-BU	L (-40°C to 150°C)	UA (TO92-3L)	B_{OP}/B_{RP}= ± 3mT, TC = -1100 ppm/°C
MLX92215LSE-AAA-000-RE	L (-40°C to 150°C)	SE (TSOT-23)	B_{OP}/B_{RP}= ± 3mT, TC = -1100 ppm/°C

1 Functional Diagram

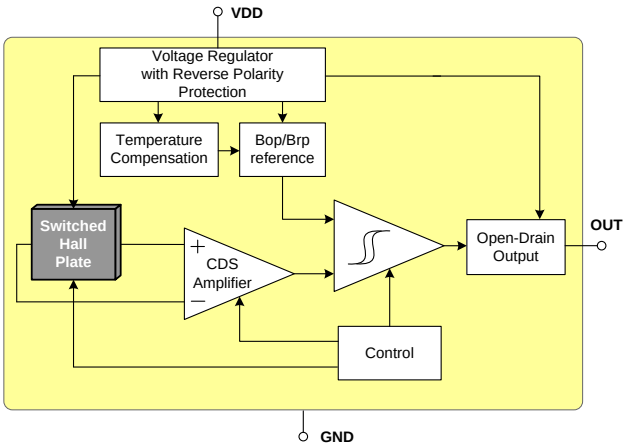

2 General Description

The Melexis MLX92215 is the second generation Hall-effect latch designed in mixed signal CMOS technology. The device integrates a voltage regulator, Hall sensor with advanced offset cancellation system and an open-drain output driver, all in a single package. Based on the existing platform, the magnetic core is using an improved offset cancellation system allowing faster and more accurate processing while being temperature insensitive and stress independent. In addition is implemented a negative temperature coefficient to compensate the natural behaviour of magnets becoming weaker with rise in temperature.

The included voltage regulator operates from 2.7 to 24V, hence covering a wide range of applications. With the built-in reverse voltage protection, a serial resistor or diode on the supply line is not required so that even remote sensors can be specified for low voltage operation down to 2.7V while being reverse voltage tolerant.

With latching magnetic characteristics, the output is turned low or high respectively with a sufficiently strong South or North pole facing the package top side. When removing the magnetic field, the device keeps its previous state.

Table of Contents

1 Functional Diagram **1**

2 General Description **1**

Table of Contents **2**

3 Glossary of Terms **3**

4 Absolute Maximum Ratings **3**

5 General Electrical Specifications **4**

6 Magnetic Specifications **5**
6.1 MLX92215LSE-AAA-000 5
6.2 MLX92215LUA-AAA-000 5

7 Output Behaviour versus Magnetic Pole **5**
7.1 South Pole Active 5

8 Performance Graphs **6**
8.1 Magnetic parameters vs. T_A 6
8.2 Magnetic parameters vs. V_{DD} 6
8.3 V_{DSon} vs. T_A 6
8.4 V_{DSon} vs. V_{DD} 6
8.5 I_{DD} vs. T_A 6
8.6 I_{DD} vs. V_{DD} 6
8.7 I_{OFF} vs. T_A 7
8.8 I_{OFF} vs. V_{OUT} 7
8.9 SE Power Derating vs. T_A 7
8.10 UA Power Derating vs. T_A 7

9 Application Information **8**
9.1 Typical Three-Wire Application Circuit 8

10 Standard information regarding manufacturability of Melexis products with different soldering processes **9**

11 ESD Precautions **9**

12 Packages **10**
12.1 SE Package (TSOT-23) 10
12.1 UA (TO92 - 3L) 11

13 Disclaimer **12**

3 Glossary of Terms

MilliTesla (mT), Gauss	Units of magnetic flux density: 1mT = 10 Gauss
RoHS	Restriction of Hazardous Substances
TSOT	Thin Small Outline Transistor (TSOT package) – also referred with the Melexis package code "SE"
ESD	Electro-Static Discharge

4 Absolute Maximum Ratings

Parameter	Symbol	Value	Units
Supply Voltage [1, 2]	V_{DD}	+27	V
Supply Voltage (Load dump) [1, 3]	V_{DD}	+32	V
Supply Current [1, 2, 4]	I_{DD}	+20	mA
Supply Current [1, 3, 4]	I_{DD}	+50	mA
Reverse Supply Voltage [1, 2]	V_{DDREV}	-24	V
Reverse Supply Voltage (Load dump)[1, 3]	V_{DDREV}	-30	V
Reverse Supply Current [1, 2, 5]	I_{DDREV}	-20	mA
Reverse Supply Current [1, 3, 5]	I_{DDREV}	-50	mA
Output Voltage [1, 2]	V_{OUT}	+27	V
Output Current [1, 2, 5]	I_{OUT}	+20	mA
Output Current [1, 3, 6]	I_{OUT}	+75	mA
Reverse Output Voltage [1]	V_{OUTREV}	-0.5	V
Reverse Output Current [1, 2]	I_{OUTREV}	-50	mA
Operating Temperature Range	T_A	-40 to +150	°C
Storage Temperature Range	T_S	-55 to +165	°C
Maximum Junction Temperature [7]	T_J	+165	°C
ESD Sensitivity – HBM [8]	-	4000	V
ESD Sensitivity – MM [9]	-	500	V
ESD Sensitivity – CDM [10]	-	1000	V
Magnetic Flux Density	B	Unlimited	mT

Exceeding the absolute maximum ratings may cause permanent damage. Exposure to absolute-maximum-rated conditions for extended periods may affect device reliability.

[1] The maximum junction temperature should not be exceeded
[2] For maximum 1 hour
[3] For maximum 0.5 s
[4] Including current through protection device
[5] Through protection device
[6] For $V_{OUT} \leq 27V$.
[7] For 1000 hours.
[8] Human Model according AEC-Q100-002 standard
[9] Machine Model according AEC-Q100-003 standard
[10] Charged Device Model according AEC-Q100-011 standard

5 General Electrical Specifications

DC Operating Parameters T_A = -40°C to 150°C, V_{DD} = 2.7V to 24V (unless otherwise specified)

Parameter	Symbol	Test Conditions	Min	Typ [1]	Max	Units
Supply Voltage	V_{DD}	Operating	2.7	-	24	V
Supply Current	I_{DD}		1.5	3.0	4.5	mA
Reverse Supply Current	I_{DDREV}	V_{DD} = -18V			1	mA
Output Leakage Current	I_{OFF}	V_{OUT} = 12V, V_{DD} = 12V, B < Brp		0.1	10	µA
Output Saturation Voltage	V_{DSon}	B > B_{OP}, V_{DD} = 3.8 to 18V, I_{OUT} = 20mA		0.2	0.5	V
Output Rise Time [2] (R_{PU} dependent)	t_R	V_{DD} = 12V, V_{PU}[3] = 5V, R_{PU} = 1kΩ C_{LOAD} = 50pF to GND	0.1	0.3	1	µs
Output Fall Time [2] (On-chip controlled)	t_F	V_{DD} = 12V, V_{PU} = 5V, R_{PU} = 1kΩ C_{LOAD} = 50pF to GND	0.1	0.3	1	µs
Chopping Frequency	f_{CHOP}			340		kHz
Output Refresh Period [2]	t_{PER}			6		µs
Delay time [2,4]	t_D	Average over 1000 successive switching events @10kHz, square wave with B≥30mT, t_{RISE}=t_{FALL}≤20µs		6		µs
Output Jitter (p-p) [2, 5]	t_{JITTER}	Over 1000 successive switching events @1kHz, square wave with B≥30mT, t_{RISE}=t_{FALL} ≤100µs		±3		µs
Maximum Switching Frequency [2,6]	f_{SW}	B≥30mT and square wave magnetic field	30	50		kHz
Power-On Time [7,8]	t_{ON}	V_{DD} = 5V, dV_{DD}/dt > 2V/us		16	35	µs
SE Package Thermal Resistance	R_{TH}	Single layer (1S) Jedec board		300		°C/W
UA Package Thermal Resistance	R_{TH}	Single layer (1S) Jedec board		200		°C/W

Table 1: Electrical specifications

[1] Typical values are defined at T_A = +25°C and V_{DD} = 12V, unless otherwise specified
[2] Guaranteed by design and verified by characterization, not production tested
[3] R_{PU} and V_{PU} are respectively the external pull-up resistor and pull-up power supply
[4] The Delay Time is the time from magnetic threshold reached to the start of the output switching
[5] Output jitter is the unpredictable deviation of the Delay time
[6] Maximum switching frequency corresponds to the maximum frequency of the applied magnetic field which is detected without loss of pulses
[7] The Power-On Time represents the time from reaching V_{DD} = V_{POR} to the first refresh of the output (first valid output state)
[8] Power-On Slew Rate is not critical for the proper device start-up

6 Magnetic Specifications

6.1 MLX92215LSE-AAA-000

DC Operating Parameters V_{DD} = 3.8 to 24V, T_a = -40°C to 150°C

Test Condition	Operating Point B_{OP} (mT)			Release Point B_{RP} (mT)			TC (ppm/°C)	Active Pole
	Min	Typ[1]	Max	Min	Typ[10]	Max	Typ[1]	
T_J = -40°C	1	3.2	5	-5	-3.2	-1	-1100	South Pole
T_J = 25°C	1	3	5	-5	-3.0	-1		
T_J = 150°C	0.5	2.6	5	-5	-2.6	-0.5		

6.2 MLX92215LUA-AAA-000

DC Operating Parameters V_{DD} = 3.8 to 24V, T_a = -40°C to 150°C

Test Condition	Operating Point B_{OP} (mT)			Release Point B_{RP} (mT)			TC (ppm/°C)	Active Pole
	Min	Typ[1]	Max	Min	Typ[10]	Max	Typ[1]	
T_J = -40°C	1	3.2	5	-5	-3.2	-1	-1100	South Pole
T_J = 25°C	1	3	5	-5	-3.0	-1		
T_J = 150°C	0.5	2.6	5	-5	-2.6	-0.5		

7 Output Behaviour versus Magnetic Pole

7.1 South Pole Active

DC Operating Parameters T_A = -40°C to 150°C, V_{DD} = 2.7V to 24V (unless otherwise specified)

Parameter	Test Conditions	OUT
South pole	$B > B_{OP}$	Low (V_{DSon})
North pole	$B < B_{RP}$	High (V_{PU}) [2]

Table 2: Output behaviour versus magnetic pole [3]

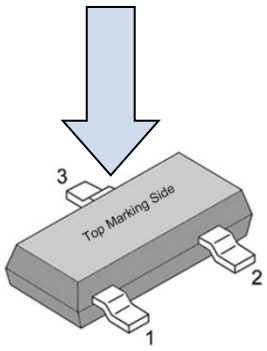

[1] Typical values are defined at T_A = +25°C and V_{DD} = 12V, unless otherwise specified
[2] Default Output state during power-up
[3] Magnetic pole facing the branded/top side of the package

8 Performance Graphs

8.1 Magnetic parameters vs. T_A

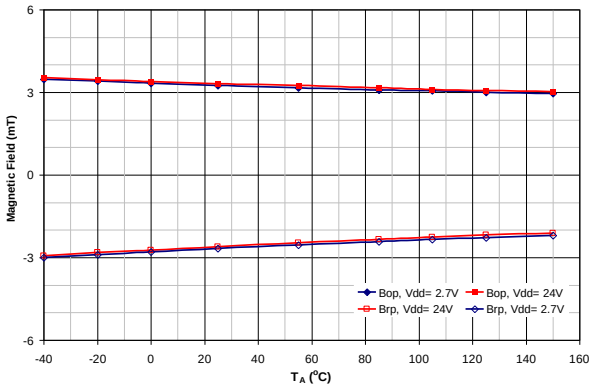

8.2 Magnetic parameters vs. V_{DD}

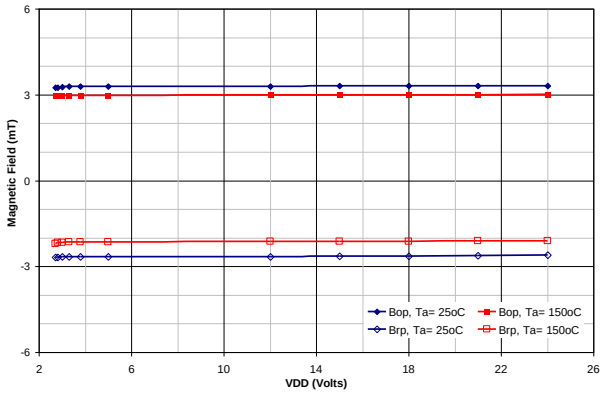

8.3 V_{DSon} vs. T_A

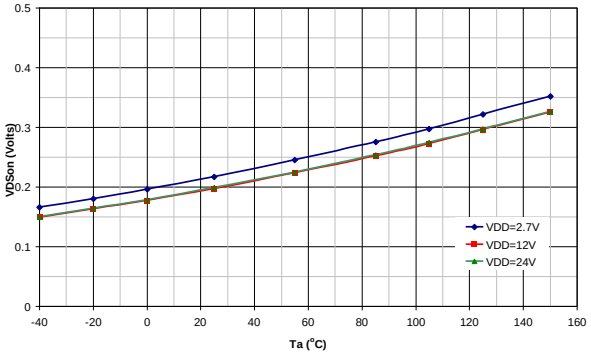

8.4 V_{DSon} vs. V_{DD}

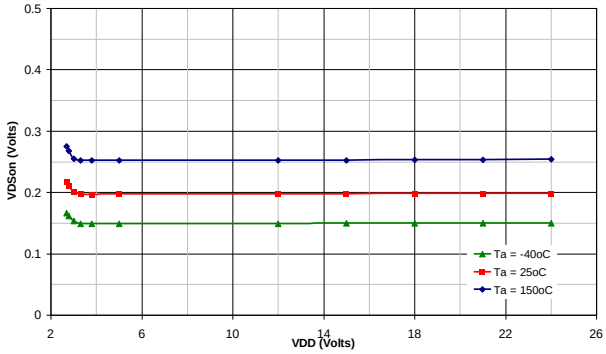

8.5 I_{DD} vs. T_A

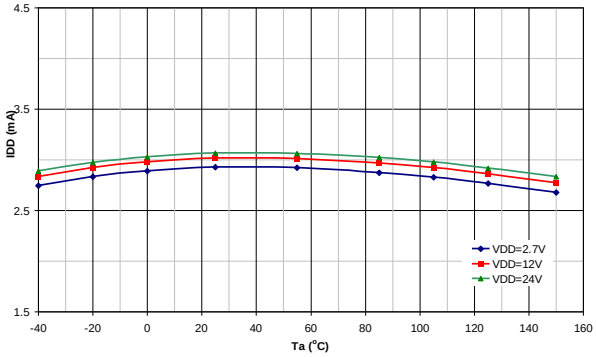

8.6 I_{DD} vs. V_{DD}

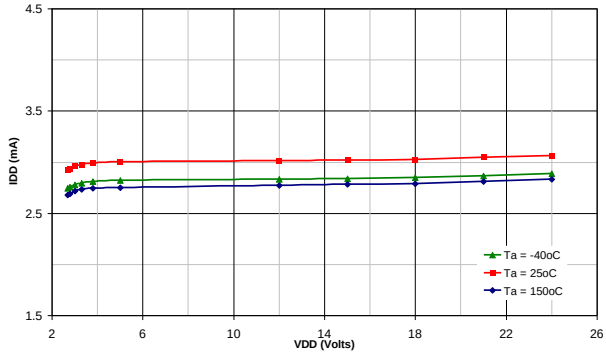

8.7 I_{OFF} vs. T_A

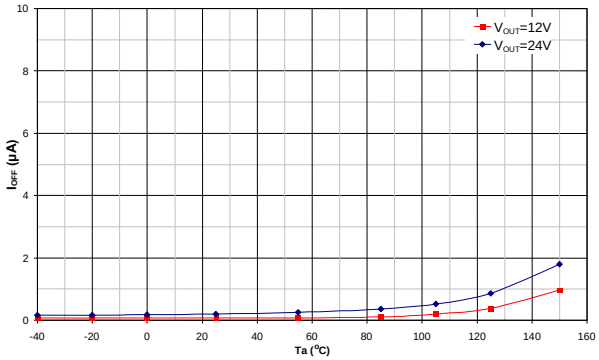

8.8 I_{OFF} vs. V_{OUT}

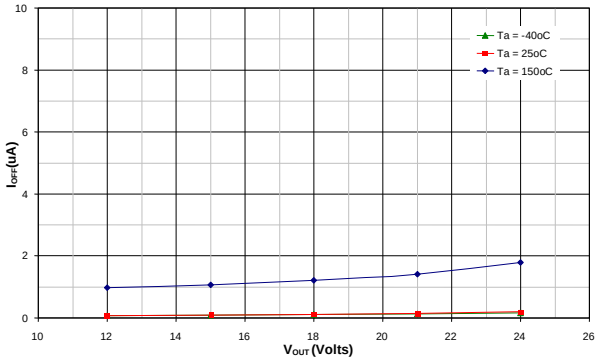

8.9 SE Power Derating vs. T_A

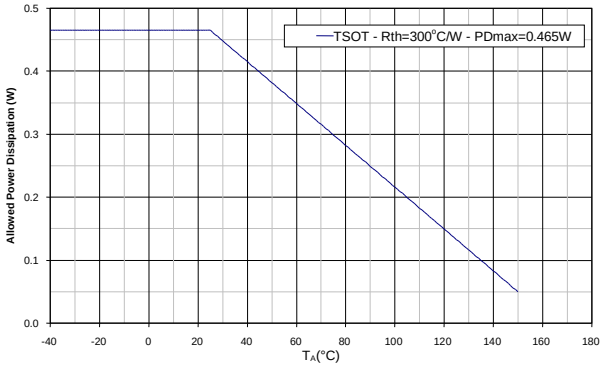

8.10 UA Power Derating vs. T_A

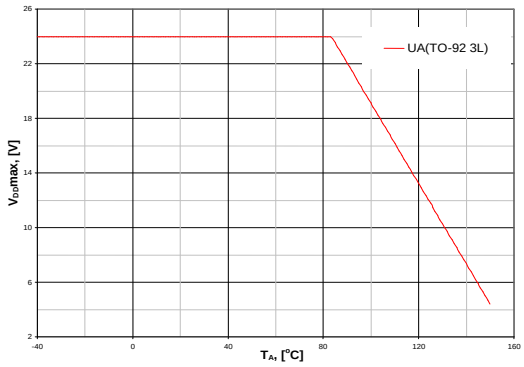

9 Application Information

9.1 Typical Three-Wire Application Circuit

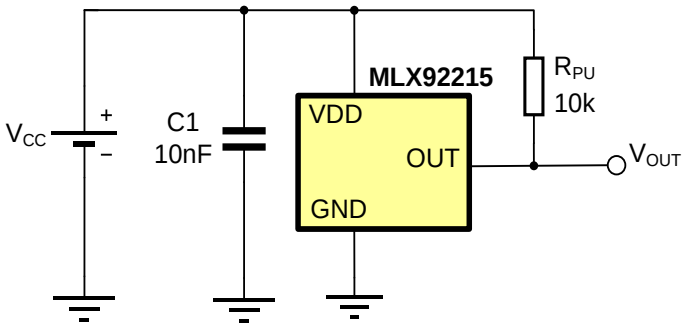

Notes:
1. For proper operation, a 10nF to 100nF bypass capacitor should be placed as close as possible to the V_{DD} and ground pin.
2. The pull-up resistor R_{PU} value should be chosen in to limit the current through the output pin below the maximum allowed continuous current for the device.
3. A capacitor connected to the output is not obligatory, because the output slope is generated internally.

10 Standard information regarding manufacturability of Melexis products with different soldering processes

Our products are classified and qualified regarding soldering technology, solderability and moisture sensitivity level according to following test methods:

Reflow Soldering SMD's (Surface Mount Devices)

- IPC/JEDEC J-STD-020
  Moisture/Reflow Sensitivity Classification for Nonhermetic Solid State Surface Mount Devices
  (classification reflow profiles according to table 5-2)
- EIA/JEDEC JESD22-A113
  Preconditioning of Nonhermetic Surface Mount Devices Prior to Reliability Testing
  (reflow profiles according to table 2)

Wave Soldering SMD's (Surface Mount Devices) and THD's (Through Hole Devices)

- EN60749-20
  Resistance of plastic- encapsulated SMD's to combined effect of moisture and soldering heat
- EIA/JEDEC JESD22-B106 and EN60749-15
  Resistance to soldering temperature for through-hole mounted devices

Iron Soldering THD's (Through Hole Devices)

- EN60749-15
  Resistance to soldering temperature for through-hole mounted devices

Solderability SMD's (Surface Mount Devices) and THD's (Through Hole Devices)

- EIA/JEDEC JESD22-B102 and EN60749-21
  Solderability

For all soldering technologies deviating from above mentioned standard conditions (regarding peak temperature, temperature gradient, temperature profile etc) additional classification and qualification tests have to be agreed upon with Melexis.

The application of Wave Soldering for SMD's is allowed only after consulting Melexis regarding assurance of adhesive strength between device and board.

Melexis is contributing to global environmental conservation by promoting **lead free** solutions. For more information on qualifications of **RoHS** compliant products (RoHS = European directive on the Restriction Of the use of certain Hazardous Substances) please visit the quality page on our website: http://www.melexis.com/quality.aspx

11 ESD Precautions

Electronic semiconductor products are sensitive to Electro Static Discharge (ESD).
Always observe Electro Static Discharge control procedures whenever handling semiconductor products.

12 Packages

12.1 SE Package (TSOT-23)

Package Outline Drawing & Hall Plate Position

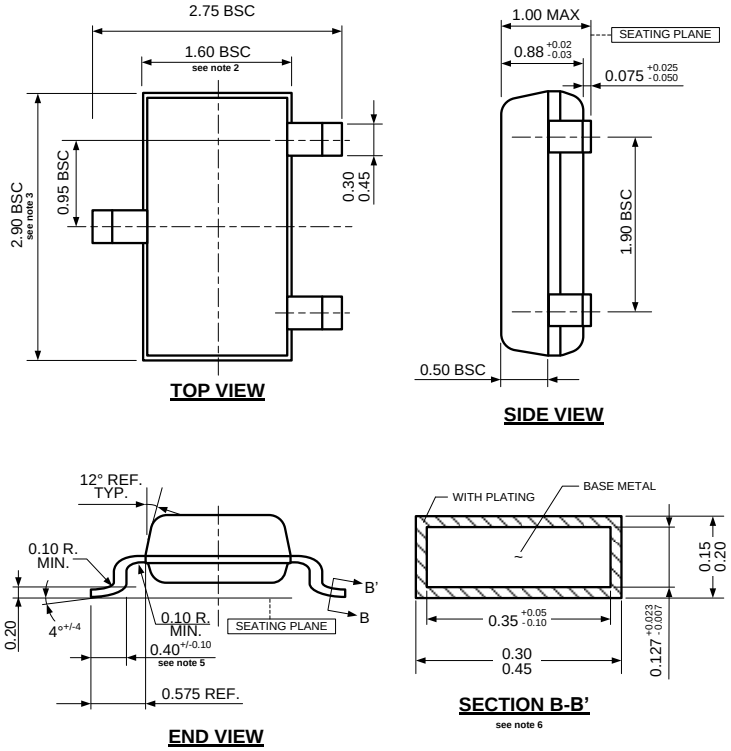

Notes:

1. All dimensions are in millimeters
2. Outermost plastic extreme width does not include mold flash or protrusions. Mold flash and protrusions shall not exceed 0.15mm per side.
3. Outermost plastic extreme length does not include mold flash or protrusions. Mold flash and protrusions shall not exceed 0.25mm per side.
4. The lead width dimension does not include dambar protrusion. Allowable dambar protrusion shall be 0.07mm total in excess of the lead width dimension at maximum material condition.
5. Dimension is the length of terminal for soldering to a substrate.
6. Dimension on SECTION B-B' applies to the flat section of the lead between 0.08mm and 0.15mm from the lead tip.
7. Formed lead shall be planar with respect to one another with 0.076mm at seating plane.

Marking:

Top side :11YY ; YY: Year (last 2 digits))

Bottom side: XXXX (XXXX: Lot Number (last 4 digits)

Hall plate location

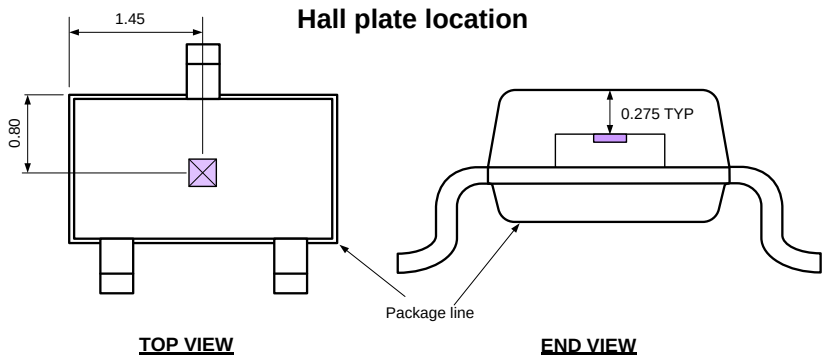

Notes:

1. All dimensions are in millimeters

Pin №	Name	Type	Function
1	VDD	Supply	Supply Voltage pin
2	OUT	Output	Open Drain output pin
3	GND	Ground	Ground pin

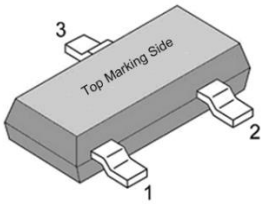

12.1 UA (TO92 - 3L)

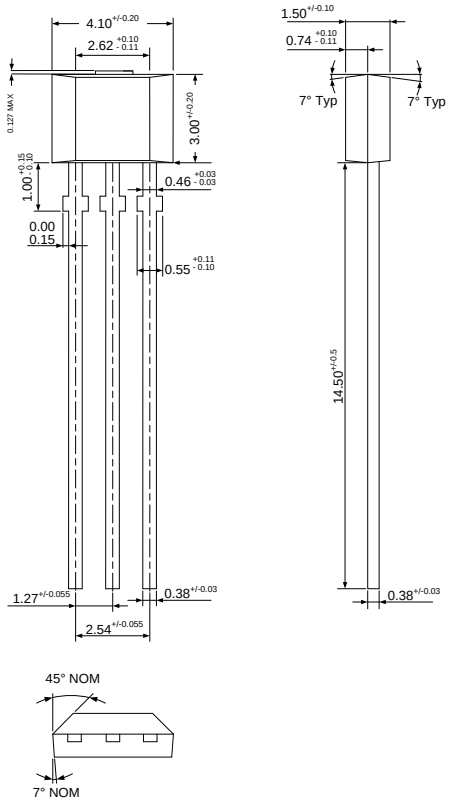

Notes:

1. All dimensions are in millimeters
2. Package dimension exclusive molding flash.
3. The end flash shall not exceed 0.127 mm on the top side.

Marking:

1st Line : xxx – last three digits from lot number

2nd Line : yww

y - last digit of year
ww - calendar week

Hall plate location

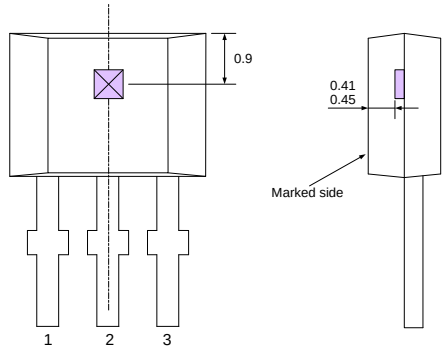

Notes:

1. All dimensions are in millimeters

Pin №	Name	Type	Function
1	VDD	Supply	Supply Voltage pin
2	GND	Ground	Ground pin
3	TEST	I/O	Analog & Digital I/O

13 Disclaimer

Devices sold by Melexis are covered by the warranty and patent indemnification provisions appearing in its Term of Sale. Melexis makes no warranty, express, statutory, implied, or by description regarding the information set forth herein or regarding the freedom of the described devices from patent infringement. Melexis reserves the right to change specifications and prices at any time and without notice. Therefore, prior to designing this product into a system, it is necessary to check with Melexis for current information. This product is intended for use in normal commercial applications. Applications requiring extended temperature range, unusual environmental requirements, or high reliability applications, such as military, medical life-support or life-sustaining equipment are specifically not recommended without additional processing by Melexis for each application.
The information furnished by Melexis is believed to be correct and accurate. However, Melexis shall not be liable to recipient or any third party for any damages, including but not limited to personal injury, property damage, loss of profits, loss of use, interrupt of business or indirect, special incidental or consequential damages, of any kind, in connection with or arising out of the furnishing, performance or use of the technical data herein. No obligation or liability to recipient or any third party shall arise or flow out of Melexis' rendering of technical or other services.
© 2012 Melexis NV. All rights reserved.

For the latest version of this document, go to our website at
www.melexis.com

Or for additional information contact Melexis Direct:

Europe, Africa:	Americas:	Asia:
Phone: +32 1367 0495	Phone: +1 248-306-5400	Phone: +32 1367 0495
E-mail: sales_europe@melexis.com	E-mail: sales_usa@melexis.com	E-mail: sales_asia@melexis.com

ISO/TS 16949 and ISO14001 Certified

OCEAN CHIPS
Океан Электроники
Поставка электронных компонентов

Компания «Океан Электроники» предлагает заключение долгосрочных отношений при поставках импортных электронных компонентов на взаимовыгодных условиях!

Наши преимущества:

- Поставка оригинальных импортных электронных компонентов напрямую с производств Америки, Европы и Азии, а так же с крупнейших складов мира;
- Широкая линейка поставок активных и пассивных импортных электронных компонентов (более 30 млн. наименований);
- Поставка сложных, дефицитных, либо снятых с производства позиций;
- Оперативные сроки поставки под заказ (от 5 рабочих дней);
- Экспресс доставка в любую точку России;
- Помощь Конструкторского Отдела и консультации квалифицированных инженеров;
- Техническая поддержка проекта, помощь в подборе аналогов, поставка прототипов;
- Поставка электронных компонентов под контролем ВП;
- Система менеджмента качества сертифицирована по Международному стандарту ISO 9001;
- При необходимости вся продукция военного и аэрокосмического назначения проходит испытания и сертификацию в лаборатории (по согласованию с заказчиком);
- Поставка специализированных компонентов военного и аэрокосмического уровня качества (Xilinx, Altera, Analog Devices, Intersil, Interpoint, Microsemi, Actel, Aeroflex, Peregrine, VPT, Syfer, Eurofarad, Texas Instruments, MS Kennedy, Miteq, Cobham, E2V, MA-COM, Hittite, Mini-Circuits, General Dynamics и др.);

Компания «Океан Электроники» является официальным дистрибьютором и эксклюзивным представителем в России одного из крупнейших производителей разъемов военного и аэрокосмического назначения **«JONHON»**, а так же официальным дистрибьютором и эксклюзивным представителем в России производителя высокотехнологичных и надежных решений для передачи СВЧ сигналов **«FORSTAR»**.

AVIC JONHON

«JONHON» (основан в 1970 г.)

Разъемы специального, военного и аэрокосмического назначения:

(Применяются в военной, авиационной, аэрокосмической, морской, железнодорожной, горно- и нефтедобывающей отраслях промышленности)

«FORSTAR» (основан в 1998 г.)

ВЧ соединители, коаксиальные кабели, кабельные сборки и микроволновые компоненты:

(Применяются в телекоммуникациях гражданского и специального назначения, в средствах связи, РЛС, а так же военной, авиационной и аэрокосмической отраслях промышленности).

FORSTAR®

Телефон: 8 (812) 309-75-97 (многоканальный)
Факс: 8 (812) 320-03-32
Электронная почта: ocean@oceanchips.ru
Web: http://oceanchips.ru/
Адрес: 198099, г. Санкт-Петербург, ул. Калинина, д. 2, корп. 4, лит. А