International
IOR Rectifier

IRAMS06UP60A

iMOTION™ Series

6A, 600V

Plug N Drive™ Integrated Power Module for Appliance Motor Drive

Description

International Rectifier's IRAMS06UP60A is an Integrated Power Module developed and optimized for electronic motor control in appliance applications specifically for VF compressor drives for refrigerators and freezer or in heating and ventilation as electronic fan controls. The IRAMS06UP60A offers an extremely compact, high performance AC motor-driver in a single isolated package for a very simple design.
A built-in temperature monitor and over-current protection, along with the short-circuit rated IGBTs and integrated under-voltage lockout function, deliver high level of protection and fail-safe operation.
The integration of the bootstrap diodes for the high-side driver section, and the single polarity power supply required to drive the internal circuitry, simplify the utilization of the module and deliver further cost reduction advantages.

Features

- Integrated Gate Drivers and Bootstrap Diodes
- Temperature Monitor
- Overcurrent shutdown
- Fully Isolated Package.
- Low $V_{CE(on)}$ Non Punch Through IGBT Technology
- Undervoltage lockout for all channels
- Matched propagation delay for all channels
- Schmitt-triggered input logic
- Cross-conduction prevention logic
- Lower di/dt gate driver for better noise immunity
- Motor Power range 0.1~0.5kW / 85~253 Vac
- Isolation $2000V_{RMS}$/1min

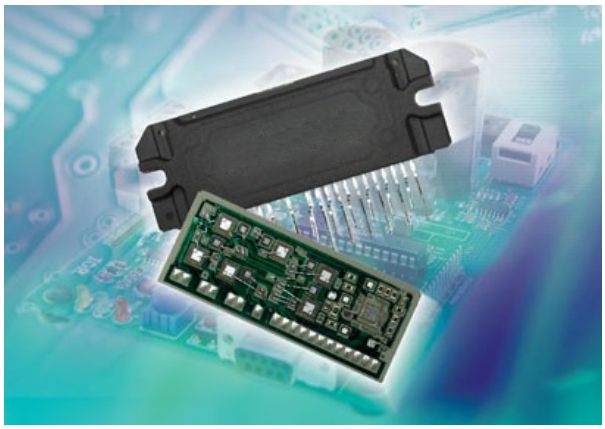

Absolute Maximum Ratings

Parameter	Description	Max. Value	Units
V_{CES}	Maximum IGBT Blocking Voltage	600	V
V^+	Positive Bus Input Voltage	450	
I_o @ T_C=25°C	RMS Phase Current	6	A
I_o @ T_C=100°C	RMS Phase Current	3	
I_{pk}	Maximum Peak Phase Current (tp<100ms)	10	
F_p	Maximum PWM Carrier Frequency	20	kHz
P_d	Maximum Power dissipation per Phase	7.5	W
V_{iso}	Isolation Voltage (1min)	2000	V_{RMS}
$T_{J\ (IGBT\ \&\ Diodes)}$	Operating Junction temperature Range	-40 to +150	°C
$T_{J\ (Driver\ IC)}$	Operating Junction temperature Range	-40 to +150	
T	Mounting torque Range (M3 screw)	0.8 to 1.0	Nm

Internal Electrical Schematic - IRAMS06UP60A

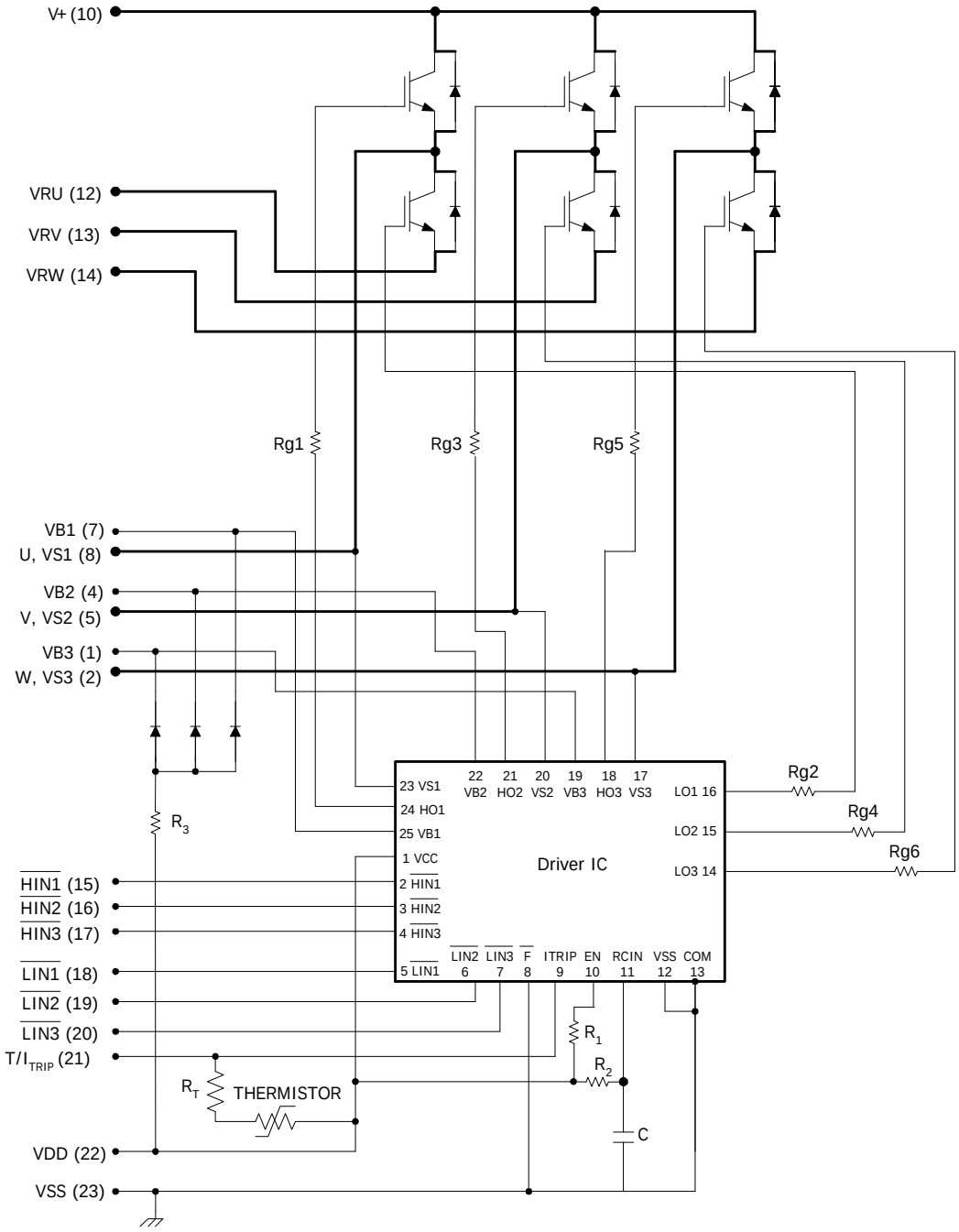

Inverter Section Electrical Characteristics @ T_J = 25°C

Symbol	Parameter	Min	Typ	Max	Units	Conditions
$V_{(BR)CES}$	Collector-to-Emitter Breakdown Voltage	600	---	---	V	V_{IN}=5V, I_C=250µA
$\Delta V_{(BR)CES}$ / ΔT	Temperature Coeff. Of Breakdown Voltage	---	0.3	---	V/°C	V_{IN}=5V, I_C=1.0mA (25°C - 150°C)
$V_{CE(ON)}$	Collector-to-Emitter Saturation Voltage	---	1.9	2.4	V	I_C=3A, V_{DD}=15V
		---	2.2	2.6		I_C=3A, V_{DD}=15V, T_J=150°C
I_{CES}	Zero Gate Voltage Collector-to-Emitter Current	---	15	45	µA	V_{IN}=5V, V^+=600V
		---	60	170		V_{IN}=5V, V^+=600V, T_J=150°C
I_{Ik_module}	Zero Gate Voltage Phase-to-phase Current	--	--	50	µA	V_{IN}=5V, V^+=600V
V_{FM}	Diode Forward Voltage Drop	---	1.45	1.85	V	I_C=3A
		---	1.25	1.65		I_C=3A, T_J=150°C

Inverter Section Switching Characteristics @ T_J = 25°C

Symbol	Parameter	Min	Typ	Max	Units	Conditions
E_{on}	Turn-On Switching Loss	---	130	235	µJ	I_C=3A, V^+=400V V_{DD}=15V, L=1mH
E_{off}	Turn-Off Switching Loss	---	65	120		
E_{tot}	Total Switching Loss	---	195	355		See CT1 T_J=25°C
E_{on}	Turn-on Swtiching Loss	---	200	345	µJ	See CT1 T_J=150°C
E_{off}	Turn-off Switching Loss	---	90	150		Energy losses include "tail" and diode reverse recovery
E_{tot}	Total Switching Loss	---	290	495		
Erec	Diode Reverse Recovery energy	---	50	110	µJ	T_J=150°C, V^+ =400V V_{DD}=15V, I_F=3A, L=1mH
t_{rr}	Diode Reverse Recovery time	---	150	200	ns	
RBSOA	Reverse Bias Safe Operating Area	FULL SQUARE				T_J=150°C, I_C=3A, V_P=600V V^+=480V, V_{DD}=+15V to 0V See CT3
SCSOA	Short Circuit Safe Operating Area	10	---	---	µs	T_J=150°C, V_P=600V, V^+=360V, V_{DD}=+15V to 0V See CT2

Thermal Resistance

Symbol	Parameter	Min	Typ	Max	Units	Conditions
$R_{th(J-C)}$	Junction to case thermal resistance, each IGBT under inverter operation.	---	---	6.5	°C/W	Flat, greased surface. Heatsink compound thermal conductivity - 1W/mK
$R_{th(J-C)}$	Junction to case thermal resistance, each Diode under inverter operation.	---	---	9	°C/W	
$R_{th(C-S)}$	Thermal Resistance case to sink	---	0.1	---	°C/W	

Absolute Maximum Ratings Driver Function

Absolute Maximum Ratings indicate substaines limits beyond which damage to the device may occur. All voltage parameters are absolute voltages referenced to V_{SS} . (Note 1)

Symbol	Definition	Min	Max	Units
$V_{S1,2,3}$	High Side offset voltage	-0.3	600	V
$V_{B1,2,3}$	High Side floating supply voltage	-0.3	20	V
V_{DD}	Low Side and logic fixed supply voltage	-0.3	20	V
V_{IN}	Input voltage LIN, HIN, T/I_{TRIP}	-0.3	7	V
T_J	Juction Temperature	-40	150	°C

Recommended Operating Conditions Driver Function

The Input/Output logic timing diagram is shown in Figure 1. For proper operation the device should be used within the recommended conditions. All voltages are absolute referenced to V_{SS}. The V_S offset is tested with all supplies biased at 15V differential (Note 1). All input pin (V_{IN}) and I_{TRIP} are clamped with a 5.2V zener diode and pull-up resistor to V_{DD}

Symbol	Definition	Min	Max	Units
$V_{B1,2,3}$	High side floating supply voltage	V_S+12	V_S+20	V
$V_{S1,2,3}$	High side floating supply offset voltage	Note 2	450	
V_{DD}	Low side and logic fixed supply voltage	12	20	V
V_{ITRIP}	T/I_{TRIP} input voltage	V_{SS}	V_{SS}+5	
V_{IN}	Logic input voltage LIN, HIN	V_{SS}	V_{SS}+5	V

Static Electrical Characteristics Driver Function

V_{BIAS} (V_{CC}, $V_{BS1,2,3}$)=15V, unless otherwise specified. The V_{IN} and I_{IN} parameters are referenced to V_{SS} and are applicable to all six channels. (Note 1)

Symbol	Definition	Min	Typ	Max	Units
$V_{IN,th+}$	Positive going input threshold	3.0	---	---	V
$V_{IN,th-}$	Negative going input threshold	---	---	0.8	V
V_{CCUV+} V_{BSUV+}	V_{CC} and V_{BS} supply undervoltage Positive going threshold	10.6	11.1	11.6	V
V_{CCUV-} V_{BSUV-}	V_{CC} and V_{BS} supply undervoltage Negative going threshold	10.4	10.9	11.4	V
V_{CCUVH} V_{BSUVH}	V_{CC} and V_{BS} supply undervoltage $I_{lockout}$ hysteresis	---	0.2	---	V
I_{QBS}	Quiescent V_{BS} supply current	---	70	120	µA
I_{QCC}	Quiscent V_{CC} supply current	---	1.6	2.3	mA
I_{LK}	Offset Supply Leakage Current	---	---	50	µA
I_{IN+}	Input bias current (OUT=LO)	---	100	220	µA
I_{IN+}	Input bias current (OUT=HI)	---	200	300	µA
V(I_{TRIP})	I_{TRIP} threshold Voltage (OUT=HI or OUT=LO)	3.85	4.3	4.75	V

Dynamic Electrical Characteristics

$V_{DD}=V_{BS}=V_{BIAS}=15V$, $I_o=1A$, $V_D=9V$, $PWM_{IN}=2kHz$, $V_{IN_ON}=V_{IN_th+}$, $V_{IN_OFF}=V_{IN_th-}$

$T_A=25°C$, unless otherwise specified

Symbol	Definition	Min	Typ	Max	Units
T_{ON}	Input to output propagation turn-on delay time (see fig.11)	-	470	-	ns
T_{OFF}	Input to output propagation turn-off delay time (see fig. 11)	-	615	-	ns
D_T	Dead Time	-	290	-	ns
I/T_{Trip}	T/I_{Trip} to six switch to turn-off propagation delay (see fig. 2)	-	750	-	ns
T_{FCLTRL}	Post I_{Trip} to six switch to turn-off clear time (see fig. 2)	-	9	-	ms

Internal NTC - Thermistor Characteristics

Parameter		Typ	Units	Conditions
R_{25}	Resistance	100 +/- 3%	kΩ	T_C = 25°C
R_{125}	Resistance	2.522 + 17.3 % /- 14.9%	kΩ	T_C = 125°C
B	B-constant (25-50°C)	4250 +/- 2%	k	$R_2 = R_1 e^{[B(1/T2 - 1/T1)]}$
Temperature Range		-40 / 125	°C	
Typ. Dissipation constant		1	mW/°C	T_C = 25°C

Note 1: For more details, see IR21365 data sheet

Note 2: Logic operational for V_s from V^- -5V to V^- +600V. Logic state held for V_s from V^- -5V to V^- -V_{BS}. (please refer to DT97-3 for more details)

Thermistor Built-in IRAMS06UP60A

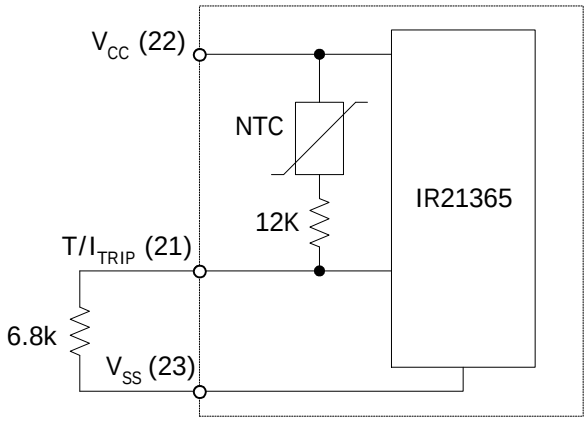

Note 3: The Maximum recommended sense voltage at the T/I_{TRIP} terminal under normal operating conditions is 3.3V.

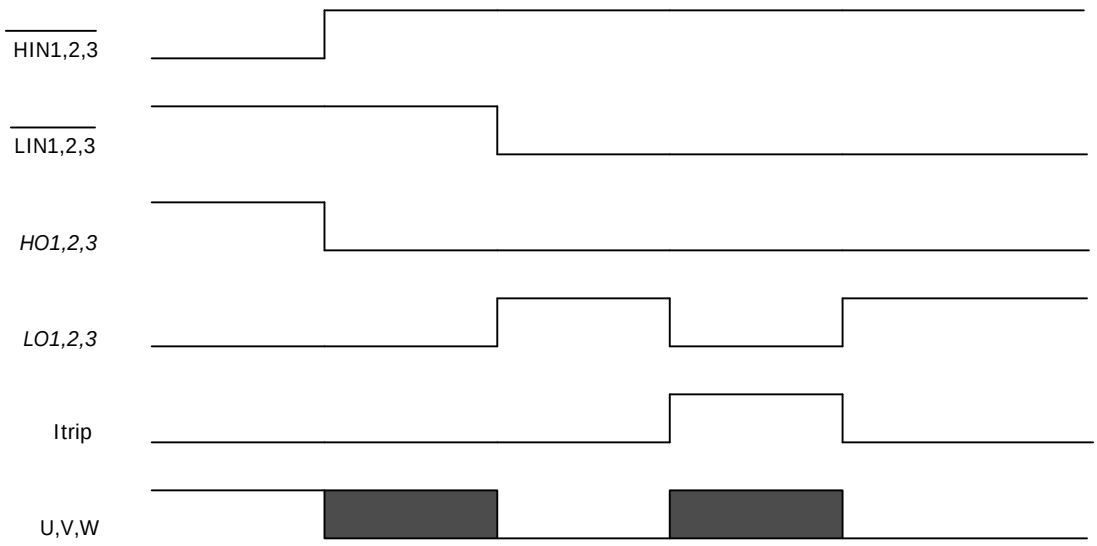

Figure1. Input/Output Timing Diagram

Note 5: The shaded area indicates that both high-side and low-side switches are off and therefore the half-bridge output voltage would be determined by the direction of current flow in the load.

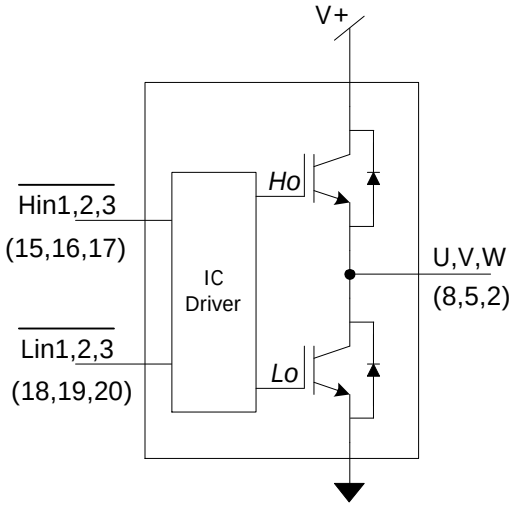

Itrip	$\overline{\text{HIN1,2,3}}$	$\overline{\text{LIN1,2,3}}$	U,V,W
0	0	1	V+
0	1	0	0
0	1	1	X
1	X	X	X

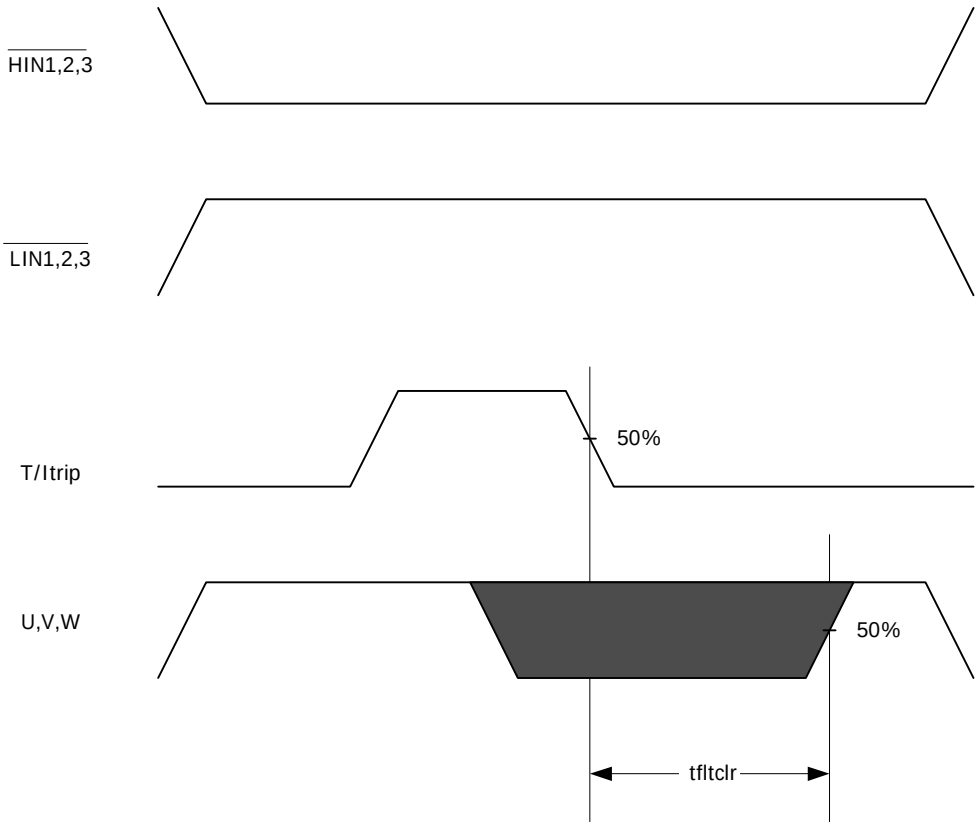

Figure 2. I_{Trip} Timing Waveform

Note 6: The shaded area indicates that both high-side and low-side switches are off and therefore the half-bridge output voltage would be determined by the direction of current flow in the load.

Module Pin-Out Description

Pin	Name	Description
1	VB3	High Side Floating Supply Voltage 3
2	W,VS3	Output 3 - High Side Floating Supply Offset Voltage
3	na	none
4	VB2	High Side Floating Supply voltage 2
5	V,VS2	Output 2 - High Side Floating Supply Offset Voltage
6	na	none
7	VB1	High Side Floating Supply voltage 1
8	U,VS1	Output 1 - High Side Floating Supply Offset Voltage
9	na	none
10	V+	Positive Bus Input Voltage
11	na	none
12	LE1	Low Side Emitter Connection - Phase 1
13	LE2	Low Side Emitter Connection - Phase 2
14	LE3	Low Side Emitter Connection - Phase 3
15	HIN1	Logic Input High Side Gate Driver - Phase 1
16	HIN2	Logic Input High Side Gate Driver - Phase 2
17	HIN3	Logic Input High Side Gate Driver - Phase 3
18	LIN1	Logic Input Low Side Gate Driver - Phase 1
19	LIN2	Logic Input Low Side Gate Driver - Phase 2
20	LIN3	Logic Input Low Side Gate Driver - Phase 3
21	T/Itrip	Temperature Monitor and Shut-down Pin
22	VCC	+15V Main Supply
23	VSS	Negative Main Supply

Typical Application Connection IRAMS06UP60A

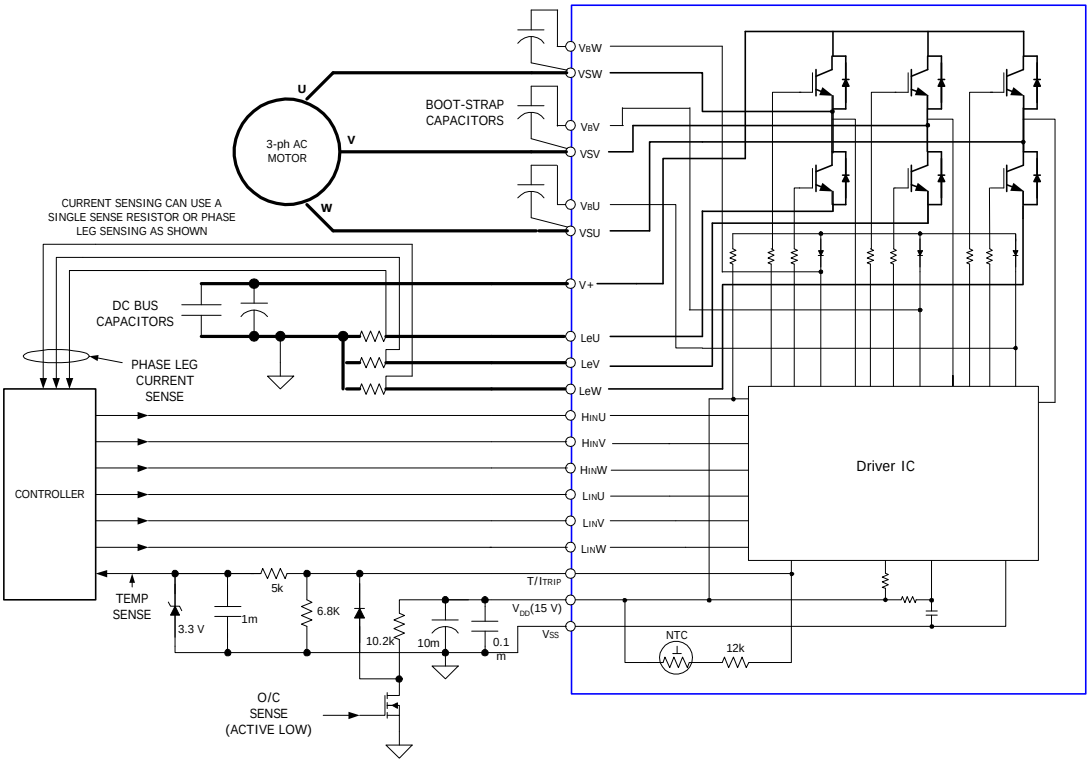

1. Electrolytic bus capacitors should be mounted as close to the module bus terminals as possible to reduce ringing and EMI problems. Additional high frequency ceramic capacitor mounted close to the module pins will further improve performance.

2. In order to provide good decoupling between V_{CC}-Gnd and V_B-V_{SS} terminals, the capacitors shown connected between these terminals should be located very close to the module pins. Additional high frequency capacitors, typically 0.1mF, are strongly recommended.

3. Value of the boot-strap capacitors depends upon the switching frequency. Their selection should be made based on IR design tip DN 98-2a, application note AN-1044 or Figure 9.

4. Low inductance shunt resistors shuld be used for phase leg current sensing. Similarly, the length of the traces between pins 12, 13 and 14 to the corresponding shunt resistors should be kept as small as possible.

5. Over-current sense signal can be obtained from external hardware detecting excessive instantaneous current in inverter.

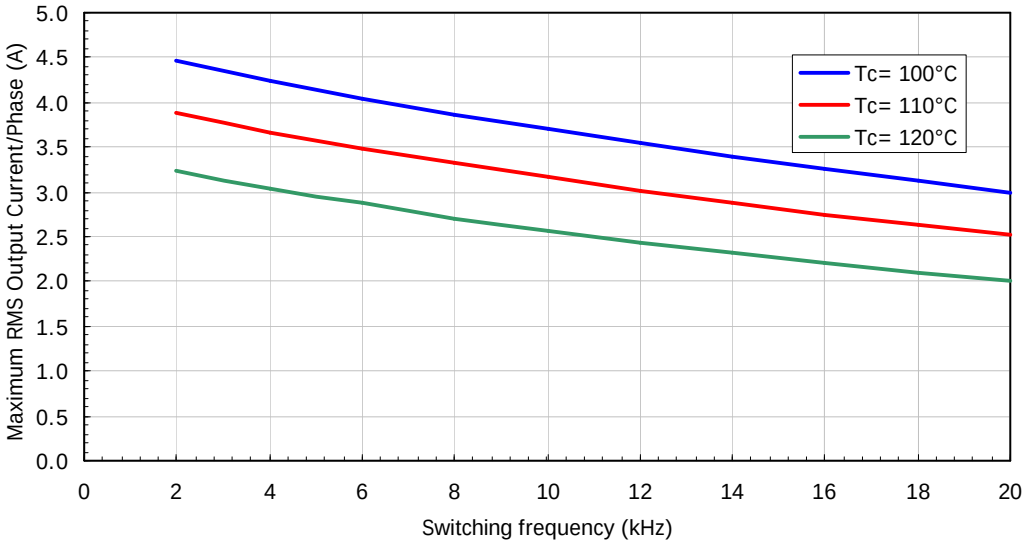

Figure 3. Maximum sinusoidal phase current as function of switching frequency
V+=400V, T_j=150°C, Modulation Depth=0.8, PF=0.6

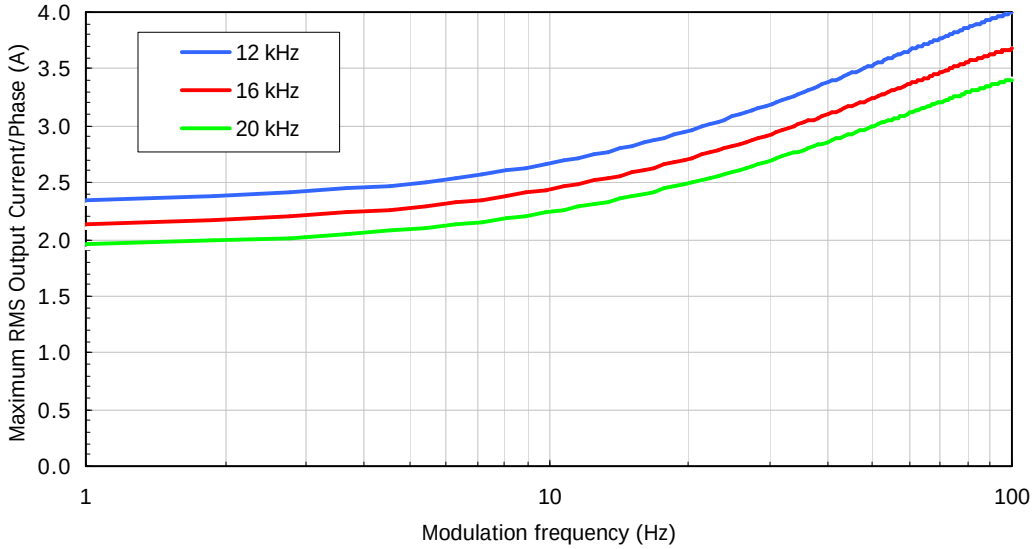

Figure 4. Maximum sinusoidal phase current as function of modulation frequency
V+=400V, T_j=150°C, T_c=100°C, Modulation Depth=0.8, PF=0.6

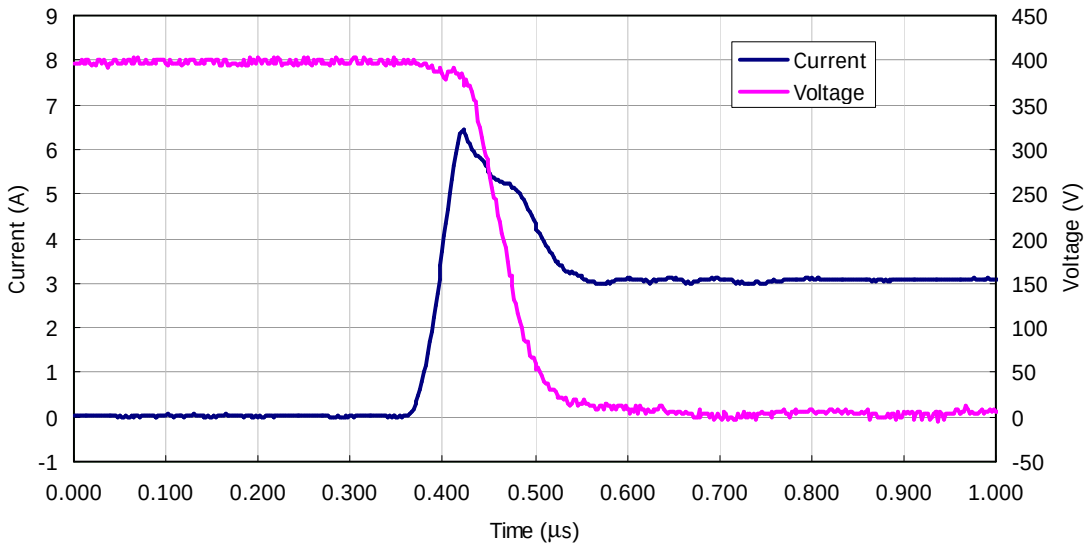

Figure 5. IGBT Turn-on. Typical turn-on waveform @T_j=125°C, V+=400V

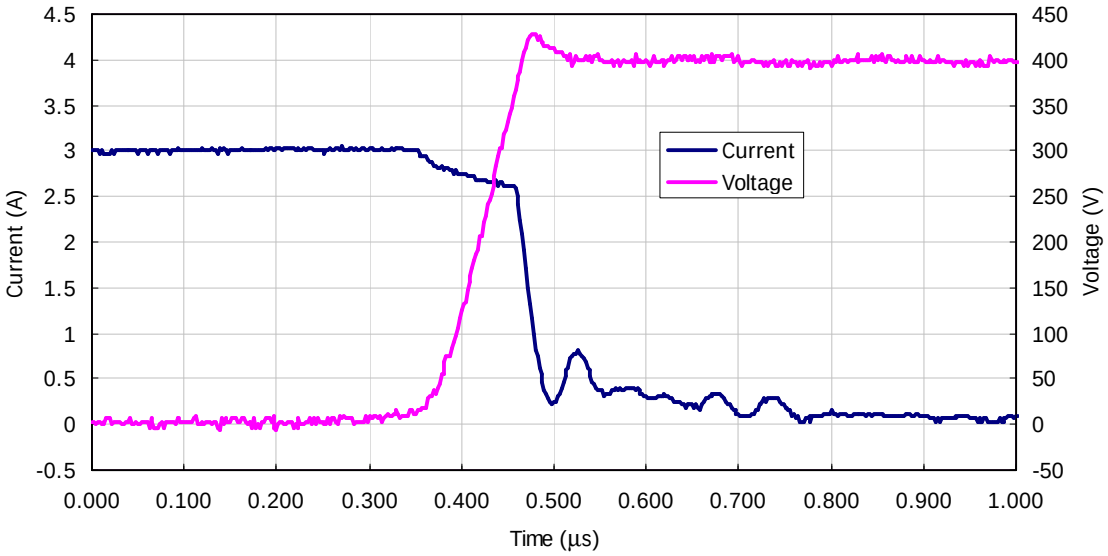

Figure 6. IGBT Turn-off. Typical turn-off waveform @T_j=125°C, V+=400V

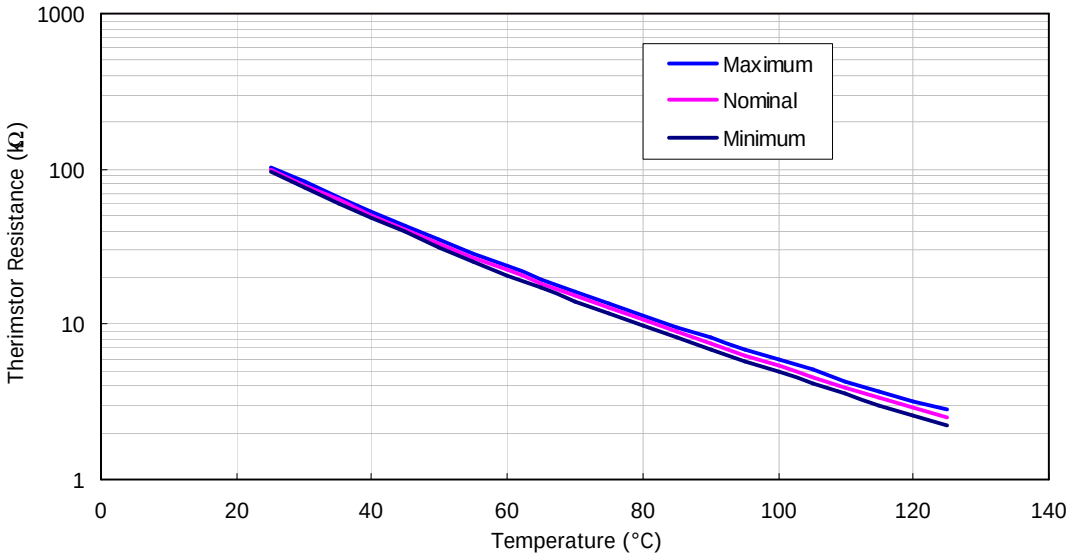

Figure 7. Variation of thermistor resistance with temperature

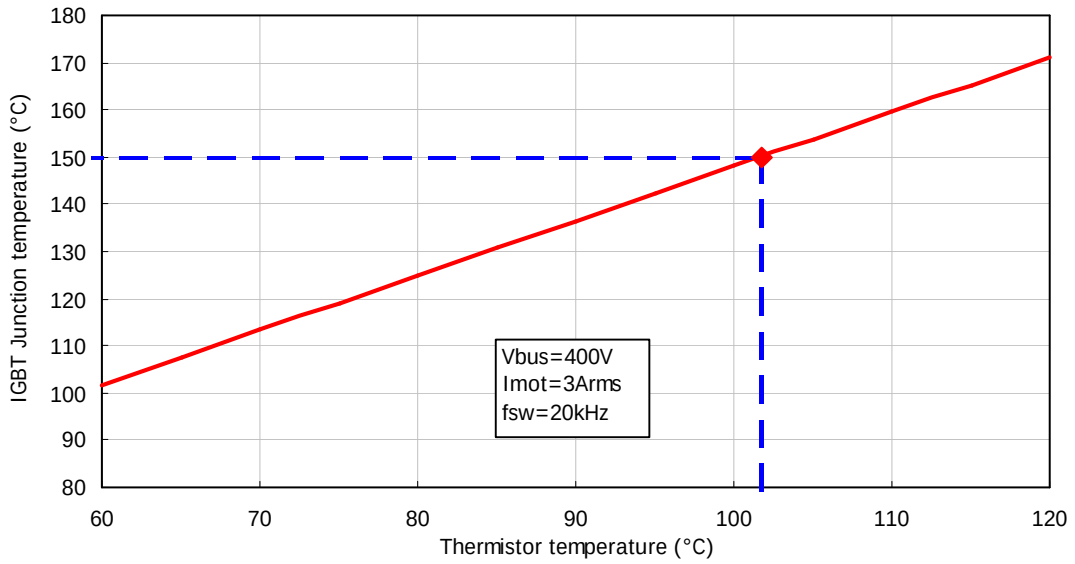

Figure 8. Estimated maximum IGBT junction temperature with thermistor temperature

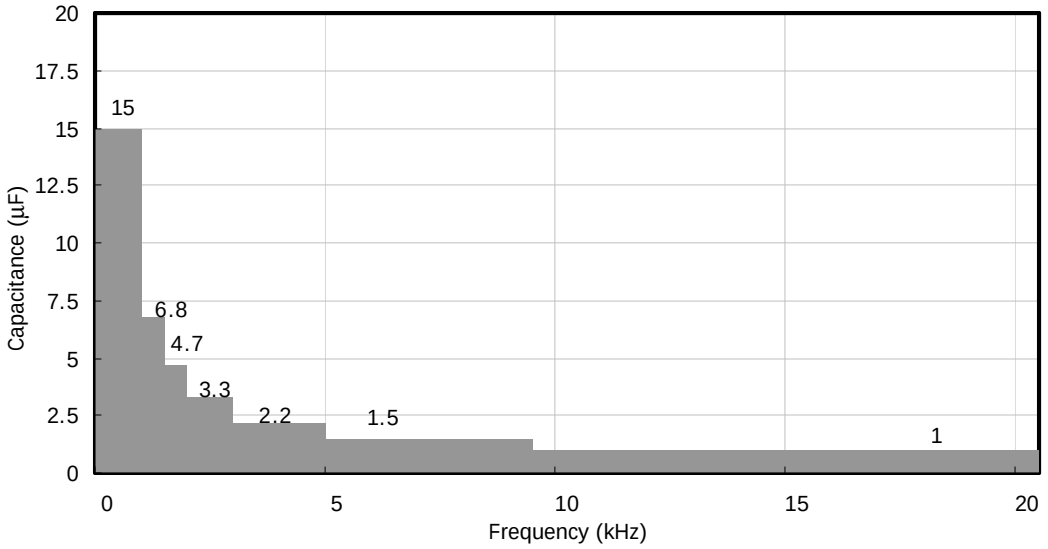

Figure 9. Recommended minimum Bootstrap Capacitor value Vs Switching Frequency

Figure 11. Switching Parameter Definitions

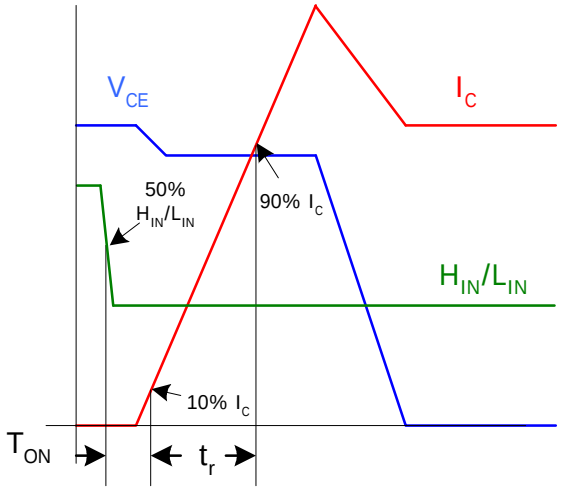

Figure 11a. Input to Output propagation turn-on delay time

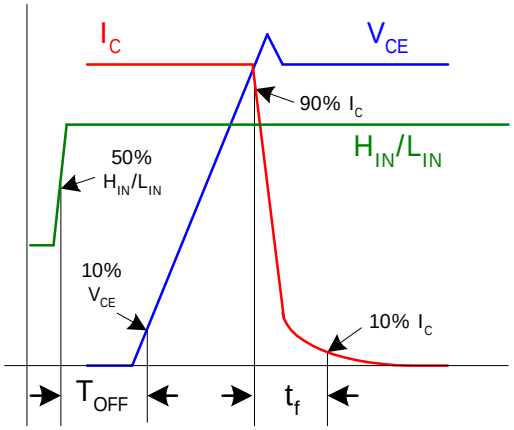

Figure 11b. Input to Output propagation turn-off delay time

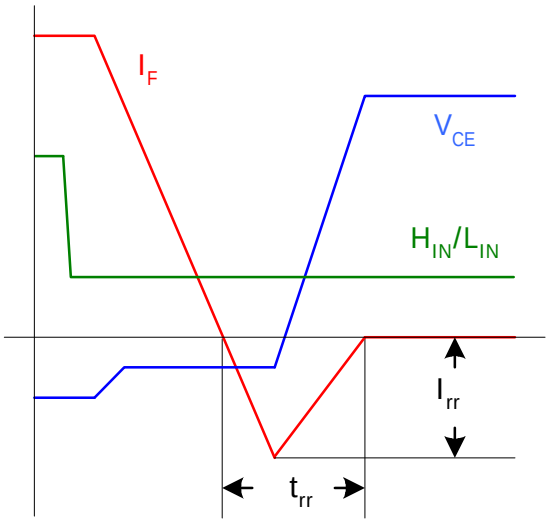

Figure 11c. Diode Reverse Recovery

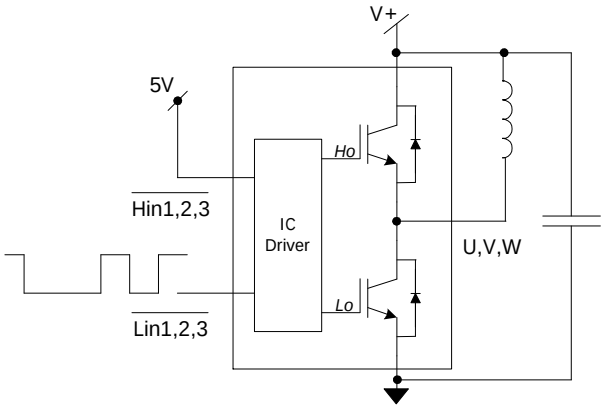

Figure CT1. Switching Loss Circuit

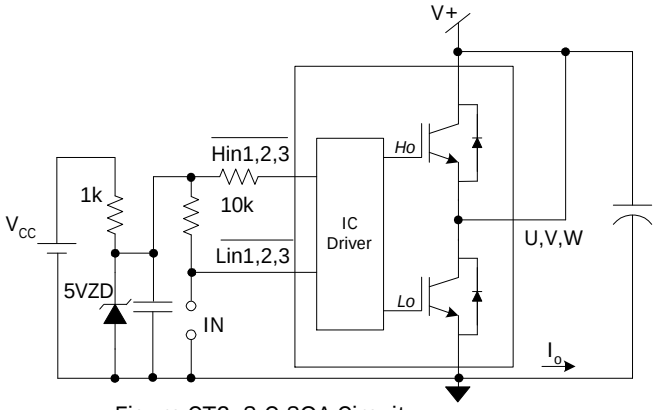

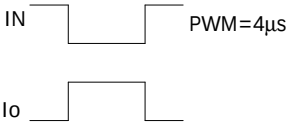

V_P=Peak Voltage on the IGBT die

Figure CT2. S.C.SOA Circuit

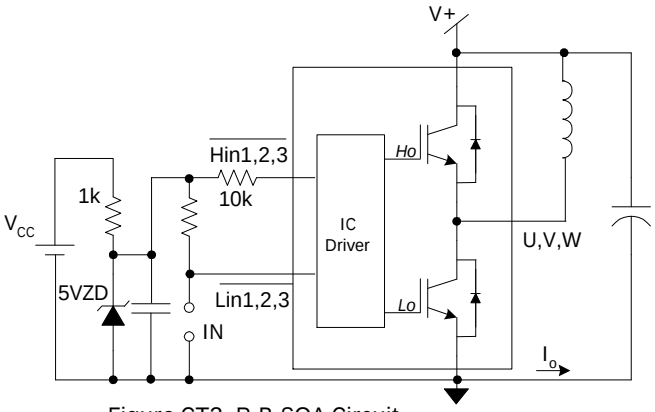

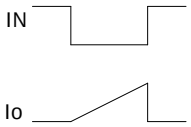

V_P=Peak Voltage on the IGBT die

Figure CT3. R.B.SOA Circuit

Package Outline

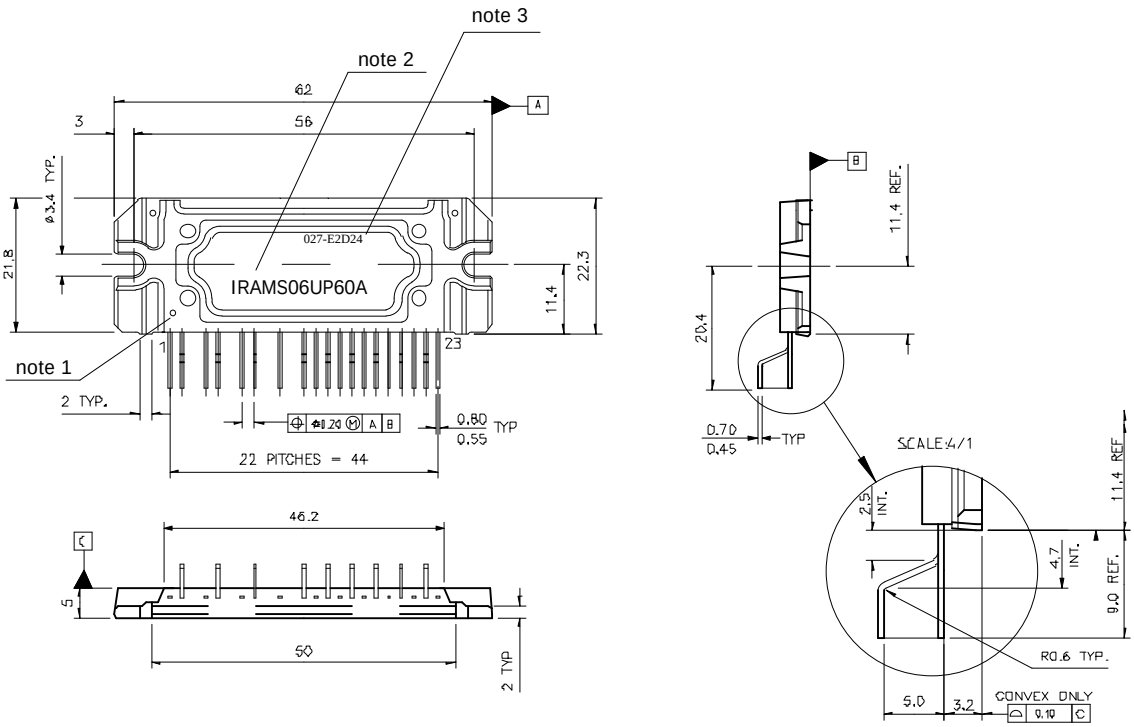

Standard pin leadforming option

Notes:

Dimensions in mm

1- Marking for pin 1 identification

2- Product Part Number

3- Lot and Date code marking

For mounting instruction, see AN1049

Package Outline

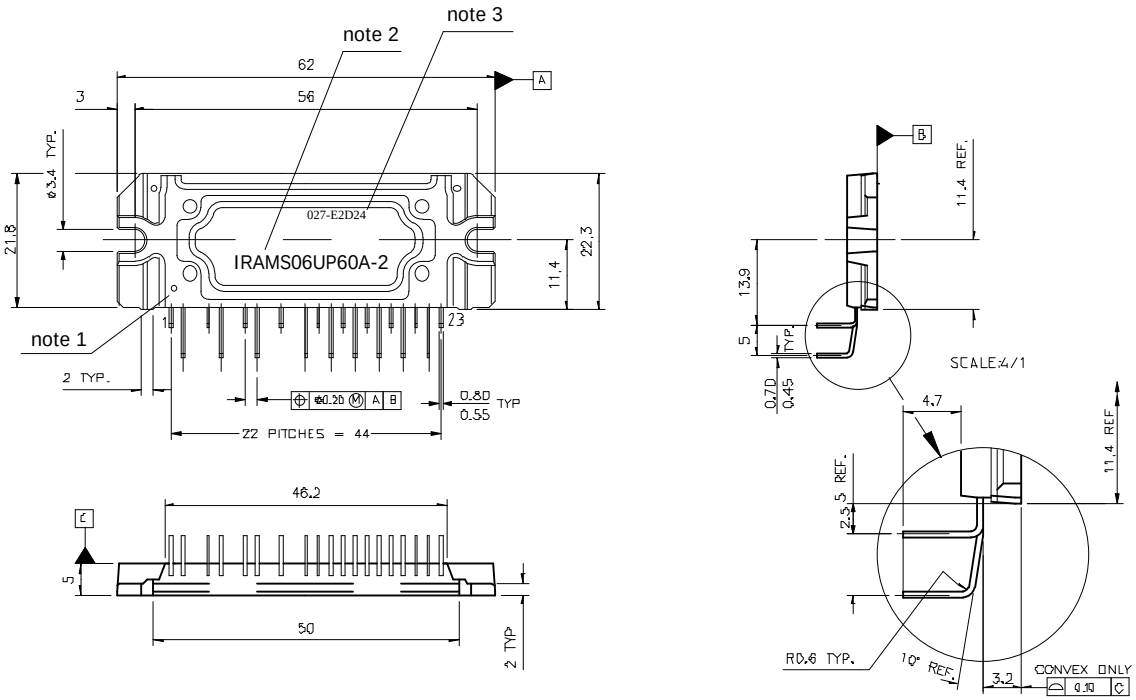

Pin leadforming option -2

Notes:

Dimensions in mm

1- Marking for pin 1 identification

2- Product Part Number

3- Lot and Date code marking

Data and Specifications are subject to change without notice

IR WORLD HEADQUARTERS: 233 Kansas St., El Segundo, California 90245, USA Tel: (310) 252-7105
TAC Fax: (310) 252-7903
Visit us at www.irf.com for sales contact information
09/04

OCEAN CHIPS
Океан Электроники
Поставка электронных компонентов

Компания «Океан Электроники» предлагает заключение долгосрочных отношений при поставках импортных электронных компонентов на взаимовыгодных условиях!

Наши преимущества:

- Поставка оригинальных импортных электронных компонентов напрямую с производств Америки, Европы и Азии, а так же с крупнейших складов мира;
- Широкая линейка поставок активных и пассивных импортных электронных компонентов (более 30 млн. наименований);
- Поставка сложных, дефицитных, либо снятых с производства позиций;
- Оперативные сроки поставки под заказ (от 5 рабочих дней);
- Экспресс доставка в любую точку России;
- Помощь Конструкторского Отдела и консультации квалифицированных инженеров;
- Техническая поддержка проекта, помощь в подборе аналогов, поставка прототипов;
- Поставка электронных компонентов под контролем ВП;
- Система менеджмента качества сертифицирована по Международному стандарту ISO 9001;
- При необходимости вся продукция военного и аэрокосмического назначения проходит испытания и сертификацию в лаборатории (по согласованию с заказчиком);
- Поставка специализированных компонентов военного и аэрокосмического уровня качества (Xilinx, Altera, Analog Devices, Intersil, Interpoint, Microsemi, Actel, Aeroflex, Peregrine, VPT, Syfer, Eurofarad, Texas Instruments, MS Kennedy, Miteq, Cobham, E2V, MA-COM, Hittite, Mini-Circuits, General Dynamics и др.);

Компания «Океан Электроники» является официальным дистрибьютором и эксклюзивным представителем в России одного из крупнейших производителей разъемов военного и аэрокосмического назначения **«JONHON»**, а так же официальным дистрибьютором и эксклюзивным представителем в России производителя высокотехнологичных и надежных решений для передачи СВЧ сигналов **«FORSTAR»**.

AVIC JONHON

«JONHON» (основан в 1970 г.)

Разъемы специального, военного и аэрокосмического назначения:

(Применяются в военной, авиационной, аэрокосмической, морской, железнодорожной, горно- и нефтедобывающей отраслях промышленности)

«FORSTAR» (основан в 1998 г.)

ВЧ соединители, коаксиальные кабели, кабельные сборки и микроволновые компоненты:

(Применяются в телекоммуникациях гражданского и специального назначения, в средствах связи, РЛС, а так же военной, авиационной и аэрокосмической отраслях промышленности).

FORSTAR®

Телефон: 8 (812) 309-75-97 (многоканальный)
Факс: 8 (812) 320-03-32
Электронная почта: ocean@oceanchips.ru
Web: http://oceanchips.ru/
Адрес: 198099, г. Санкт-Петербург, ул. Калинина, д. 2, корп. 4, лит. А