# XC6126 Series

ETR0214-005a

## Ultra Small, Highly Accurate, Single Voltage Detector

## ■GENERAL DESCRIPTION

The XC6126 series is an ultra small, highly accurate CMOS single voltage detector with very low power consumption. The device includes a highly accurate reference voltage source and uses laser trimming technologies, it maintains high accuracy over the full operation temperature range.

The device is available in both CMOS and N-channel open drain output configurations.

Ultra small package USPN-4B02 is ideally suited for small design of portable devices and high densely mounting applications. The conventional package SSOT-24 is also available for upper compatible replacements.

## ■APPLICATIONS

- Microprocessor logic reset circuitry
- System battery life and charge voltage monitors
- Memory battery back-up circuits
- Power-on reset circuits
- Power failure detection

## ■FEATURES

| | | |
|---|---|---|
| **High Accuracy** | : | ±0.8% (25℃) |
| **Temperature Characteristics** | : | ±50ppm /℃ (TYP.) |
| **Low Power Consumption** | : | 0.6μA (TYP.) (Detect: $V_{DF}$=1.8V, $V_{IN}$=1.62V)<br>0.7μA (TYP.) (Release: $V_{DF}$=1.8V, $V_{IN}$=1.98V) |
| **Operating Voltage Range** | : | 0.7V～6.0V |
| **Detect Voltage Range** | : | 1.5V～5.5V (0.1V increments) |
| **Output Configuration** | : | N-channel open drain output<br>CMOS output |
| **Detect Logic** | : | Active Low Reset |
| **Packages** | : | USPN-4B02, SSOT-24 |
| **Environmentally Friendly** | : | EU RoHS Compliant, Pb Free |

## ■TYPICAL APPLICATION CIRCUIT

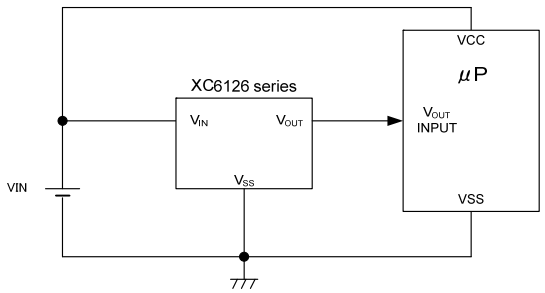


CMOS output

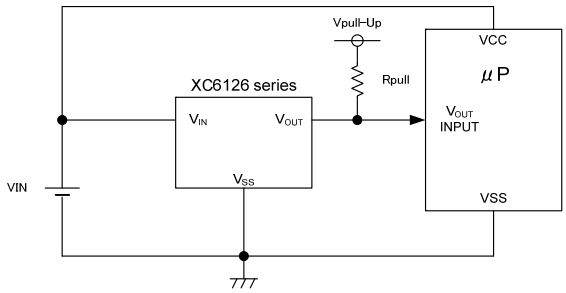


N-ch open drain output

## ■ TYPICAL PERFORMANCE CHARACTERISTICS

●Detect Voltage vs. Ambient Temperature

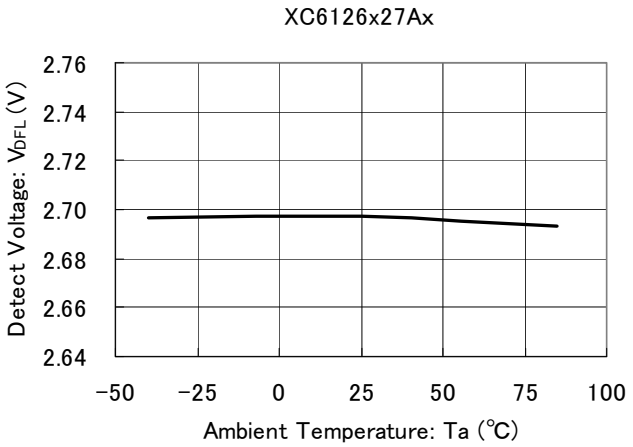

## ■PIN CONFIGURATION

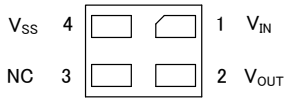


USPN-4B02
(BOTTOM VIEW)

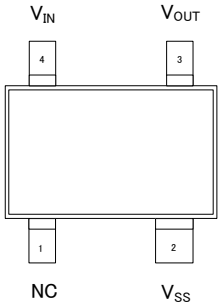


SSOT-24
(TOP VIEW)

## ■PIN ASSIGNMENT

| PIN NUMBER | | PIN NAME | FUNCTIONS |
|---|---|---|---|
| USPN-4B02 | SSOT-24 | | |
| 1 | 4 | $V_{IN}$ | Power Input |
| 2 | 3 | $V_{OUT}$ | Signal Output (Active Low) |
| 3 | 1 | NC | No connection |
| 4 | 2 | $V_{SS}$ | Ground |

## ■PRODUCT CLASSIFICATION

●Ordering Information

XC6126①②③④⑤⑥-⑦(*1)

| DESIGNATOR | ITEM | SYMBOL | DESCRIPTION |
|---|---|---|---|
| ① | Output Configuration | C | CMOS Output |
| | | N | N-ch Open Drain Output |
| ②③ | Detect Voltage | 15~55 | e.g. 2.7V → ②=2, ③=7 |
| ④ | Detect Accuracy | A | ±0.8% |
| ⑤⑥-⑦(*1) | Packages (Order Unit) | 7R-G | USPN-4B02 (5,000/Reel) |
| | | NR-G | SSOT-24 (3,000/Reel) |

(*1) The "-G" suffix denotes Halogen and Antimony free as well as being fully EU RoHS compliant.

## ■BLOCK DIAGRAMS

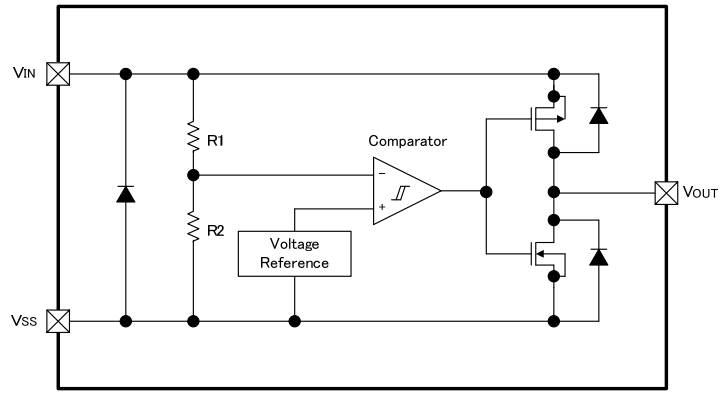


XC6126C Series

* Diodes inside the circuits are ESD protection diodes and parasitic diodes.

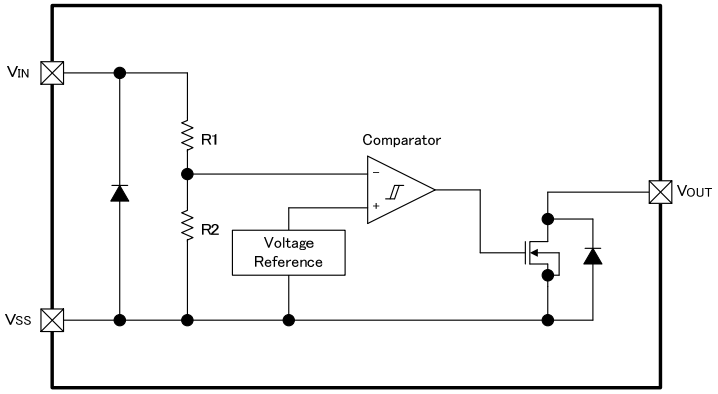


XC6126N Series

* Diodes inside the circuits are ESD protection diodes.

## ■ABSOLUTE MAXIMUM RATINGS

Ta=25℃

| PARAMETER | | SYMBOL | RATING | UNITS |
|---|---|---|---|---|
| Input Voltage | | $V_{IN}$ | $V_{SS}$-0.3～+6.5 | V |
| Output Current | | $I_{OUT}$ | 20 | mA |
| Output Voltage | XC6126C (*1) | $V_{OUT}$ | $V_{SS}$-0.3～$V_{IN}$+0.3≦6.5 | V |
| | XC6126N (*2) | | $V_{SS}$-0.3～+6.5 | |
| Power Dissipation | USPN-4B02 | Pd | 100 | mW |
| | SSOT-24 | | 150 | |
| Operating Temperature Range | | Topr | -40～+85 | °C |
| Storage Temperature Range | | Tstg | -55～+125 | °C |

Note:
(*1) CMOS Output
(*2) N-ch Open Drain Output

## ■ELECTRICAL CHARACTERISTICS

XC6126 Series

Ta=25℃

| PARAMETER | SYMBOL | CONDITIONS | MIN. | TYP. | MAX. | UNITS | CIRCUIT |
|---|---|---|---|---|---|---|---|
| Operating Voltage | $V_{IN}$ | $V_{DF(T)}$(*1)=1.5～5.5V (*2) | 0.7 (*3) | | 6.0 | V | - |
| Detect Voltage | $V_{DFL}$ | $V_{DF(T)}$=1.5～5.5V | $V_{DF(T)}$ ×0.992 | $V_{DF(T)}$ | $V_{DF(T)}$ ×1.008 | V | ① |
| | | | E-1 (*4) | | | | |
| Hysteresis Width | $V_{HYS}$ | | $V_{DFL}$ ×0.02 | $V_{DFL}$ ×0.05 | $V_{DFL}$ ×0.08 | V | ① |
| Supply Current 1 | $I_{SS1}$ | $V_{IN}$=$V_{DFL}$×0.9<br>$V_{DF(T)}$=1.5～1.8V<br>$V_{DF(T)}$=1.9～3.0V<br>$V_{DF(T)}$=3.1～5.5V | <br>-<br>-<br>- | <br>0.6<br>0.7<br>0.9 | <br>1.3<br>1.5<br>1.85 | μA | ② |
| Supply Current 2 | $I_{SS2}$ | $V_{IN}$=$V_{DFL}$×1.1(*5)<br>$V_{DF(T)}$=1.5～1.8V<br>$V_{DF(T)}$=1.9～3.0V<br>$V_{DF(T)}$=3.1～5.5V | <br>-<br>-<br>- | <br>0.7<br>0.8<br>1.0 | <br>1.55<br>1.75<br>2.25 | μA | ② |
| Output Current | $I_{OUT1}$ | $V_{IN}$=0.7V,$V_{OUT}$=0.5V(N-ch) | 0.008 | 0.2 | - | mA | ③ |
| | | $V_{IN}$=1.0V, $V_{OUT}$=0.5V(N-ch) | 0.6 | 1.5 | - | | |
| | | $V_{IN}$=2.0V(*6), $V_{OUT}$=0.5V(N-ch) | 4.5 | 7.0 | - | | |
| | | $V_{IN}$=3.0V(*7),$V_{OUT}$=0.5V(N-ch) | 7.0 | 10.0 | - | | |
| | | $V_{IN}$=4.0V(*8),$V_{OUT}$=0.5V(N-ch) | 8.5 | 11.5 | - | | |
| | | $V_{IN}$=5.0V(*9),$V_{OUT}$=0.5V(N-ch) | 9.5 | 13.0 | - | | |
| | $I_{OUT2}$ (*10) | $V_{IN}$=6.0V,$V_{OUT}$=5.5V(P-ch) | - | -4.6 | -2.8 | mA | ③ |
| Leakage Current: CMOS Output | $I_{LEAK}$ | $V_{IN}$=$V_{DFL}$×0.9,$V_{OUT}$=0V | - | -0.01 | - | μA | ③ |
| Leakage Current: N-ch Open Drain Output | | $V_{IN}$=6.0V,$V_{OUT}$=6.0V | - | 0.01 | 0.15 | μA | |
| Temperature Characteristics | $\Delta V_{DFL}$/ ($\Delta$Topr・$V_{DFL}$) | -40℃≦Topr≦85℃ | - | ±50 | - | ppm/℃ | ① |
| Detect Delay Time(*11) | $t_{DF}$ | $V_{IN}$=$V_{DFL}$×1.1(*5)→$V_{DFL}$×0.9 | - | 30 | 100 | μs | ④ |
| Release Delay Time(*12) | $t_{DR}$ | $V_{IN}$=$V_{DFL}$×0.9→$V_{DFL}$×1.1(*5) | - | 20 | 50 | μs | ④ |

Note:
(*1) $V_{DF(T)}$: Nominal detect voltage
(*2) For the N-ch Open Drain, Rpull=1MΩ, Vpull-Up=$V_{IN}$.
Rpull：An External Pull-up resistor
Vpull-Up：Pull-up Voltage
(*3)$V_{IN}$ voltage for $V_{OUT}$≦0.3V is under detect state.
(*4)For the detail value, please refer to “Voltage Table” in next page.
(*5) $V_{IN}$=6.0V where $V_{DF(T)}$= 5.5V.
(*6) For $V_{DF(T)}$＞2.0V products.
(*7) For $V_{DF(T)}$＞3.0V products.
(*8) For $V_{DF(T)}$＞4.0V products.
(*9) For $V_{DF(T)}$＞5.0V products.
(*10)For the XC6126C (CMOS output)
(*11) A time between $V_{IN}$=$V_{DFL}$ and $V_{OUT}$=$V_{DFL}$×0.45 when $V_{IN}$ falls.
(*12) A time between $V_{IN}$=$V_{DFL}$+$V_{HYS}$ and $V_{OUT}$=$V_{DFL}$×0.55 when $V_{IN}$ rises.

## ■ELECTRICAL CHARACTERISTICS (Continued)

Voltage Table 1

| NOMINAL DETECT VOLTAGE (V) | DETECT VOLTAGE (V) E-1 | |
|---|---|---|
| $V_{DF(T)}$ | $V_{DFL}$ | |
| | MIN. | MAX. |
| 1.50 | 1.4880 | 1.5120 |
| 1.60 | 1.5872 | 1.6128 |
| 1.70 | 1.6864 | 1.7136 |
| 1.80 | 1.7856 | 1.8144 |
| 1.90 | 1.8848 | 1.9152 |
| 2.00 | 1.9840 | 2.0160 |
| 2.10 | 2.0832 | 2.1168 |
| 2.20 | 2.1824 | 2.2176 |
| 2.30 | 2.2816 | 2.3184 |
| 2.40 | 2.3808 | 2.4192 |
| 2.50 | 2.4800 | 2.5200 |
| 2.60 | 2.5792 | 2.6208 |
| 2.70 | 2.6784 | 2.7216 |
| 2.80 | 2.7776 | 2.8224 |
| 2.90 | 2.8768 | 2.9232 |
| 3.00 | 2.9760 | 3.0240 |
| 3.10 | 3.0752 | 3.1248 |
| 3.20 | 3.1744 | 3.2256 |
| 3.30 | 3.2736 | 3.3264 |
| 3.40 | 3.3728 | 3.4272 |
| 3.50 | 3.4720 | 3.5280 |
| 3.60 | 3.5712 | 3.6288 |
| 3.70 | 3.6704 | 3.7296 |
| 3.80 | 3.7696 | 3.8304 |
| 3.90 | 3.8688 | 3.9312 |
| 4.00 | 3.9680 | 4.0320 |

Voltage Table 2

| NOMINAL DETECT VOLTAGE (V) | DETECT VOLTAGE (V) E-1 | |
|---|---|---|
| $V_{DF(T)}$ | $V_{DFL}$ | |
| | MIN. | MAX. |
| 4.10 | 4.0672 | 4.1328 |
| 4.20 | 4.1664 | 4.2336 |
| 4.30 | 4.2656 | 4.3344 |
| 4.40 | 4.3648 | 4.4352 |
| 4.50 | 4.4640 | 4.5360 |
| 4.60 | 4.5632 | 4.6368 |
| 4.70 | 4.6624 | 4.7376 |
| 4.80 | 4.7616 | 4.8384 |
| 4.90 | 4.8608 | 4.9392 |
| 5.00 | 4.9600 | 5.0400 |
| 5.10 | 5.0592 | 5.1408 |
| 5.20 | 5.1584 | 5.2416 |
| 5.30 | 5.2576 | 5.3424 |
| 5.40 | 5.3568 | 5.4432 |
| 5.50 | 5.4560 | 5.5440 |

## ■OPERATIONAL EXPLANATION

●Typical Application Circuit

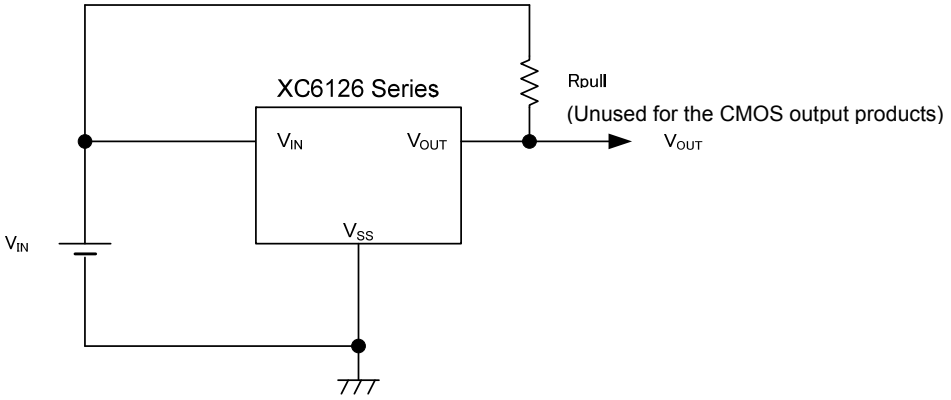


●Timing Chart

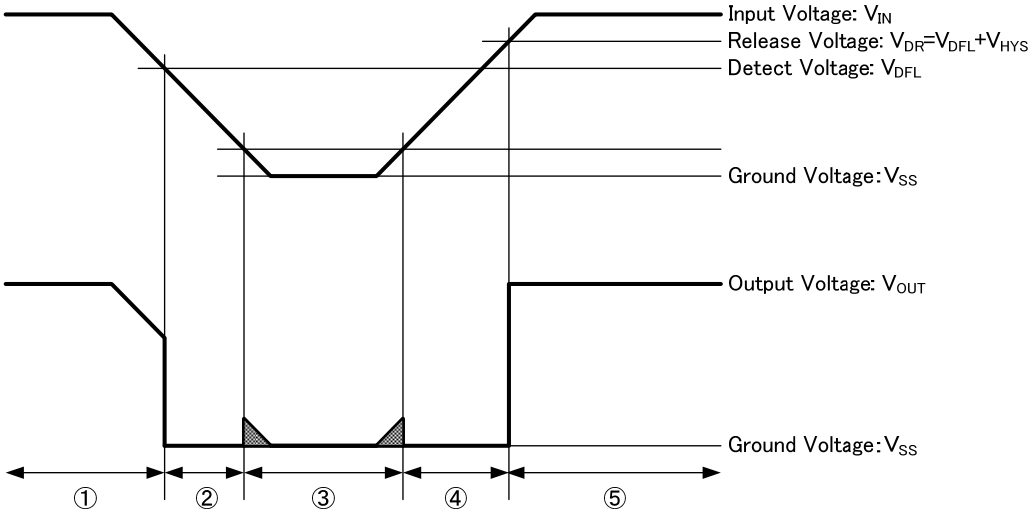


The above uses a timing chart to explain the operation of the circuit indicated in the operation explanation circuit schematic.

(1) In the initial state, an input voltage ($V_{IN}$) higher than the release voltage ($V_{DR}$) is applied, and $V_{IN}$ gradually drops.
When a voltage higher than the detect voltage ($V_{DFL}$) is applied to the input voltage ($V_{IN}$), the output voltage ($V_{OUT}$) is equal to the input voltage ($V_{IN}$).
*On the N-ch open drain output product, the VOUT pin is in a high impedance state, and when the output is pulled up, the output voltage ($V_{OUT}$) is equal to the pull-up voltage.

(2) When the input voltage ($V_{IN}$) drops below the detect voltage ($V_{DFL}$), the output voltage ($V_{OUT}$) is equal to the ground voltage ($V_{SS}$). (Detection state)
*This also applies to the N-ch open drain output product.

(3) If the input voltage ($V_{IN}$) drops below the minimum operating voltage (0.7V), the output becomes unstable.
*If the output pin on the N-ch open drain output product is pulled up, the pull-up voltage may be output as the output voltage ($V_{OUT}$).

(4) The output voltage ($V_{OUT}$) remains at the ground voltage as the input voltage ($V_{IN}$) rises past the minimum operating voltage (0.7V) and reaches the release voltage ($V_{DR}$).

(5) If the input voltage ($V_{IN}$) rises higher than the release voltage ($V_{DR}$), the output voltage ($V_{OUT}$) is equal to the input voltage ($V_{IN}$).
*On the N-ch open drain output product, the VOUT pin is in a high impedance state, and if the output is pulled up, the pull-up voltage is output as the output voltage ($V_{OUT}$) as in (1).

(6) The difference between the release voltage ($V_{DR}$) and the detect voltage ($V_{DFL}$) is the hysteresis width ($V_{HYS}$).

Note: For simplicity, the above explanation omits the circuit operation time.

# ■NOTE ON USE

1. Please use this IC within the stated maximum ratings. For temporary, transitional voltage drop or voltage rising phenomenon, the IC is liable to malfunction should the ratings be exceeded.

2. Note that there is a possibility of malfunctioning if the input voltage changes sharply or undergoes repeated, cyclical changes.

3. If the resistance $R_{IN}$ is connected between the $V_{IN}$ pin and the power supply $V_{DD}$, the voltage drop due to the flow through current in the internal circuit and $R_{IN}$ may cause oscillation when release takes place. When using the CMOS output product, oscillation due to $R_{IN}$ and the flow through current may occur without relation to release and detection, and thus $R_{IN}$ should not be connected.

4. Please use N-ch open drains configuration, when a resistor $R_{IN}$ is connected between the $V_{IN}$ pin and the power supply $V_{DD}$. In such cases, please ensure that $R_{IN}$ is less than 33kΩ.

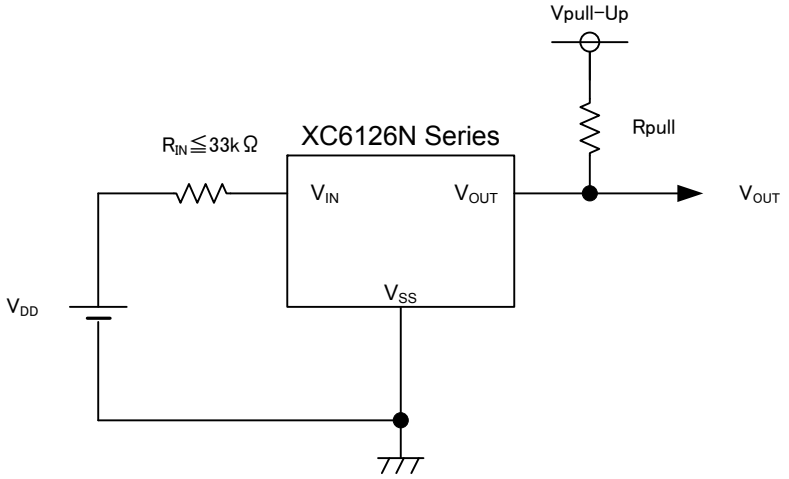


[Figure 1: Circuit connected with the input resistor fro N-ch open drain]

5. When N-ch open drain output is used, the $V_{OUT}$ voltage at detection is determined by the pull-up resistance connected to the output pin. Select the resistance based on the following considerations:

   At detection: $V_{OUT}$ = (Vpull-Up)/(1+Rpull/$R_{ON}$)
   Vpull-Up: Voltage after pull-up
   $R_{ON}$(*1): ON resistance of N-ch driver (calculated from $V_{OUT}/I_{OUT1}$ based on electrical characteristics) (*3)

Example:
   When $V_{IN}$ = 2.0V (*2), $R_{ON}$ = 0.5/4.5×10-3≒111Ω（MAX.）. If it is desired to make the $V_{OUT}$ voltage at detection 0.1V or less when Vpull-Up is 3.0 V,
   Rpull = (Vpull-Up /$V_{OUT-1}$)×$R_{ON}$=(3/0.1-1)×111 ≒ 3.2kΩ
   Therefore, to make the output voltage at detection 0.1 V or less under the above conditions, the pull-up resistance must be 3.2kΩ or higher.

(*1) Note that $R_{ON}$ becomes larger as $V_{IN}$ becomes smaller.
(*2) For $V_{IN}$ in the calculation, use the lowest value of the input voltage range you will use.
(*3) $I_{OUT1}$ in the electrical characteristics is at Ta = 25℃. $I_{OUT1}$ varies depending on the ambient temperature.
   To select a pull-up resistance taking ambient temperature into account, consult us.

   At release: $V_{OUT}$ = (Vpull-Up)/(1+Rpull/$R_{OFF}$)
   Vpull-Up: Voltage after pull-up
   $R_{OFF}$: 40MΩ (MIN.) resistance when N-ch driver is OFF (calculated from $V_{OUT}/I_{LEAK}$ based on electrical characteristics)

Example:
   Making $V_{OUT}$ 5.99 V or higher when Vpull-Up is 6.0 V:
   Rpull = (Vpull-Up/$V_{OUT-1}$)×$R_{OFF}$ = (6/5.99-1)×40×106 ≒ 66 kΩ
   Therefore, to make the output voltage at release 5.99 V or higher under the above conditions, the pull-up resistance must be 66kΩ or less.

6. Torex places an importance on improving our products and its reliability.
   However, by any possibility, we would request user fail-safe design and post-aging treatment on system or equipment.

## ■TEST CIRCUITS

Circuit 1

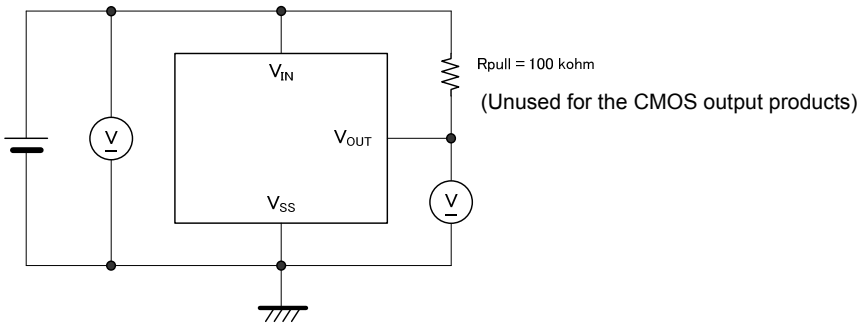


Circuit 2

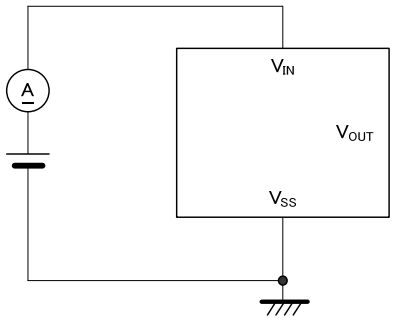


Circuit 3

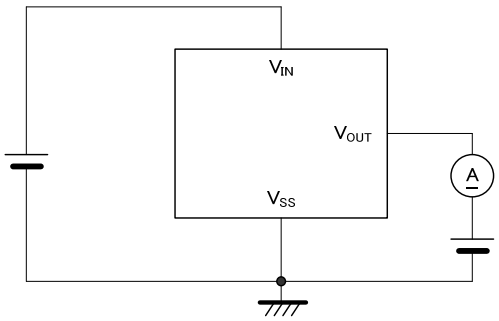


Circuit 4

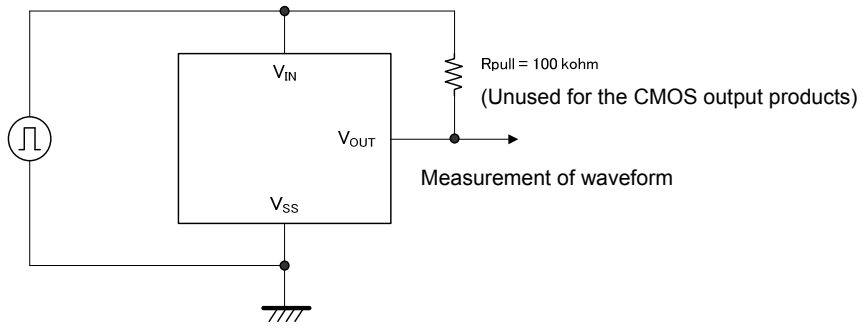

# ■TYPICAL PERFORMANCE CHARACTERISTICS

(1) Supply Current vs. Input Voltage

$V_{DF(T)}$=1.5V

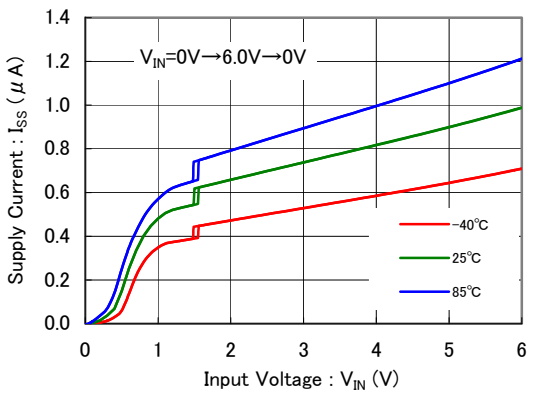


$V_{DF(T)}$=2.7V

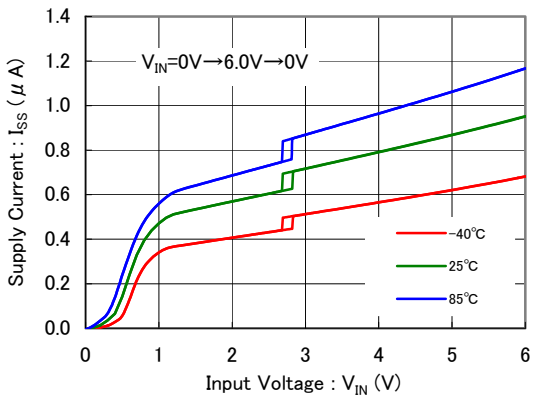


$V_{DF(T)}$=5.5V

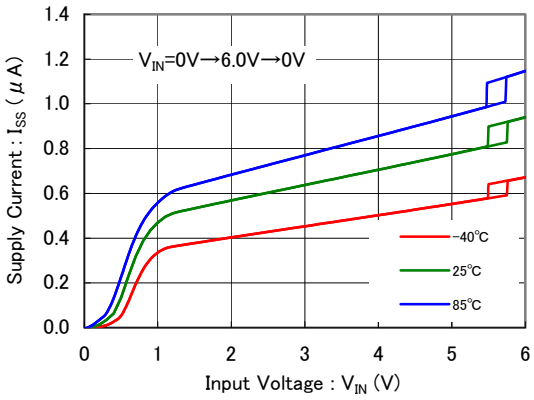


(2) Supply Current vs. Ambient Temperature

$V_{DF(T)}$=1.5V

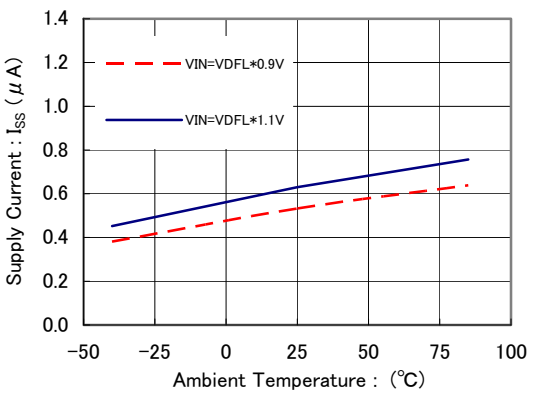


$V_{DF(T)}$=2.7V

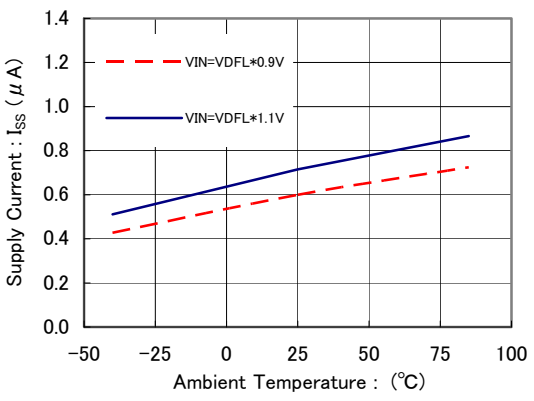


$V_{DF(T)}$=5.5V

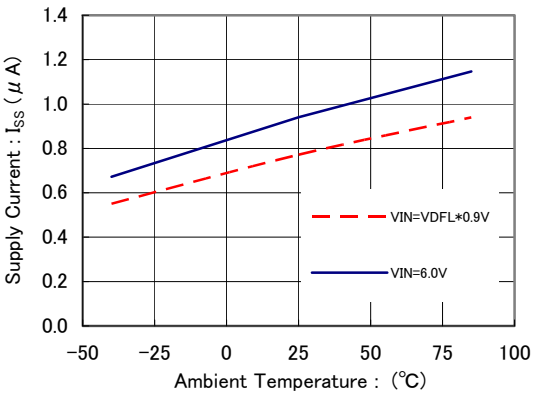

## ■TYPICAL PERFORMANCE CHARACTERISTICS (Continued)

(3) Output Voltage vs. Input Voltage1

$V_{DF(T)}$=1.5V

$V_{IN}$=1.4V～1.8V

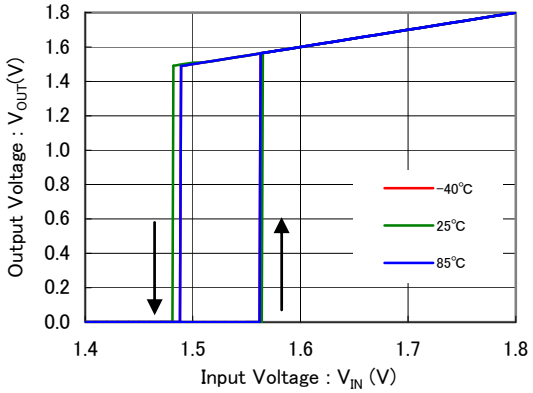


$V_{DF(T)}$=2.7V

$V_{IN}$=2.4V～

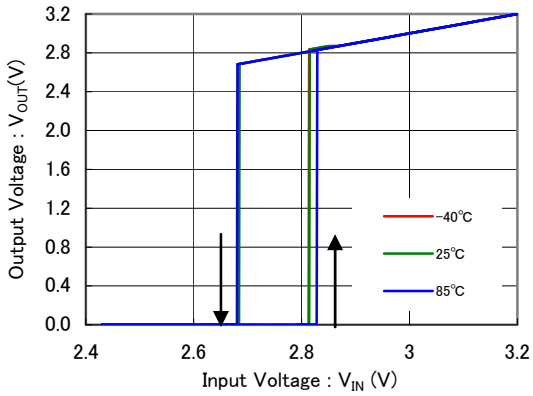


$V_{DF(T)}$=5.5V

$V_{IN}$=4.8V～

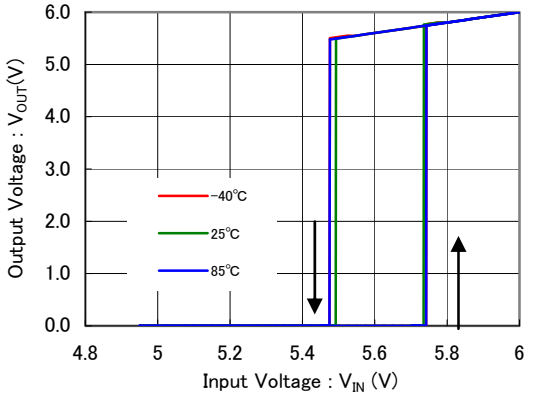


(4) Detect Voltage, Release Voltage vs. Ambient Temperature

$V_{DF(T)}$=1.5V

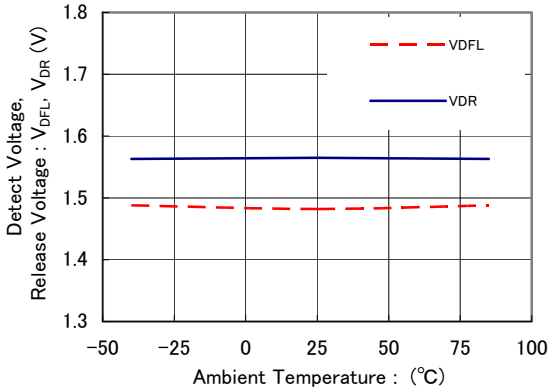


$V_{DF(T)}$=2.7V

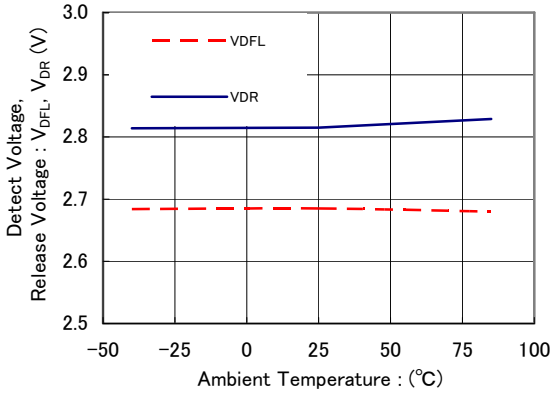


$V_{DF(T)}$=5.5V

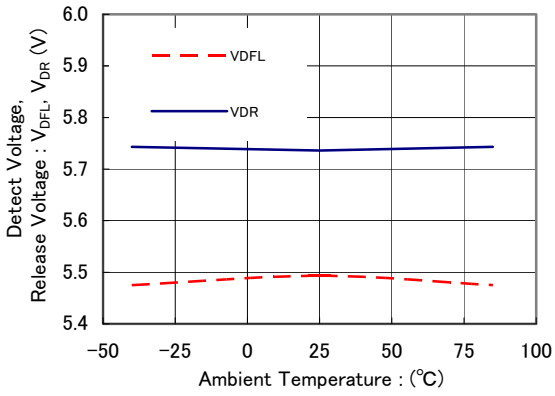

# ■TYPICAL PERFORMANCE CHARACTERISTICS (Continued)

(5) Output Voltage vs. Input Voltage2($V_{IN}$≦1.4V)

CMOS Output

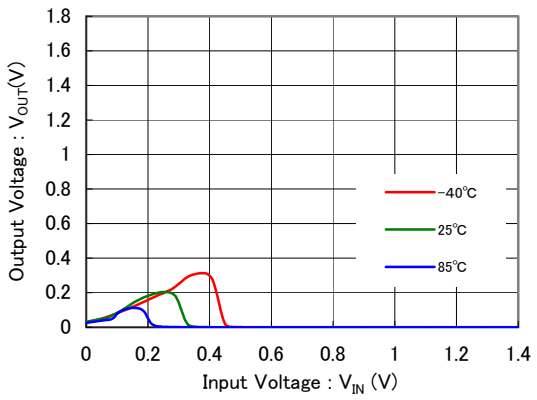


N-ch Open Drain Output

Vpull-Up=6.5V, Rpull=100kΩ

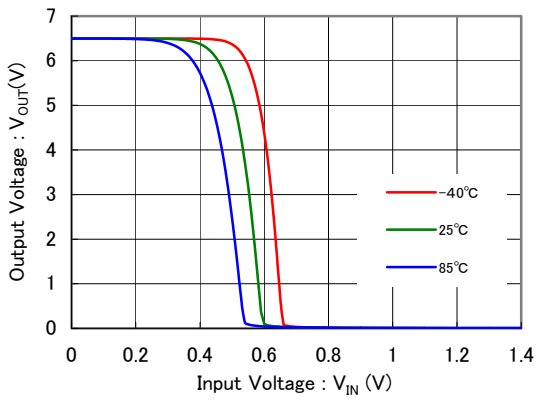


(6) Output Current (Nch Driver) vs. Input Voltage

$V_{DF(T)}$=5.5V

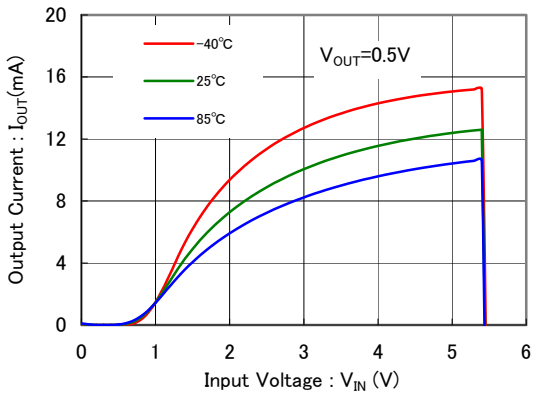


(7) Output Current (Pch Driver) vs. Input Voltage

$V_{DF(T)}$=1.5V

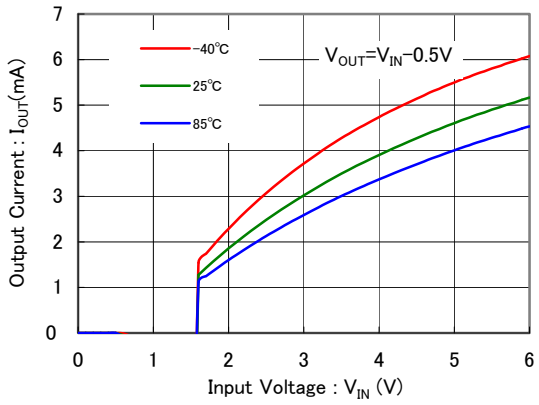


(8) Detect Delay Time vs. Ambient Temperature

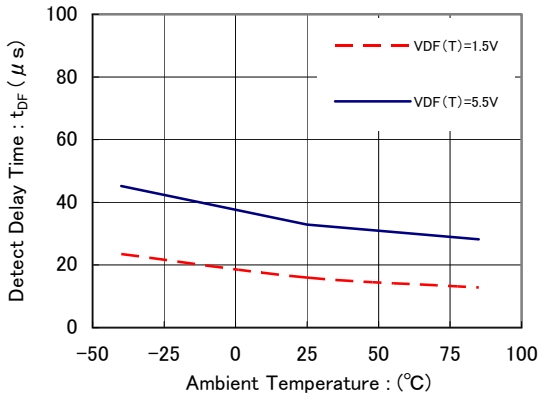


(9) Release Delay Time vs. Ambient Temperature

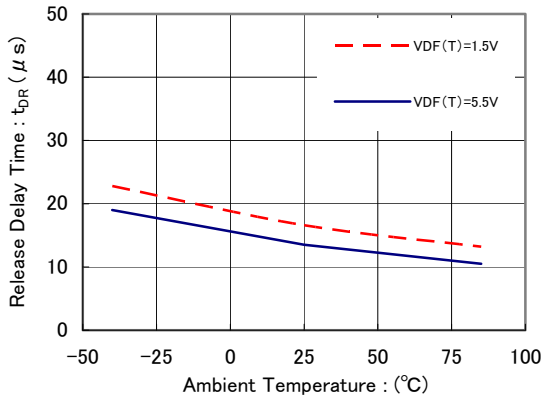

## ■TYPICAL PERFORMANCE CHARACTERISTICS (Continued)

(10) Leakage Current vs. Ambient temperature

N-ch Open Drain Output

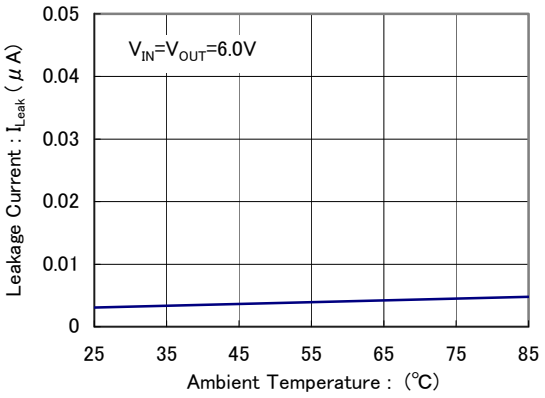

## ■PACKAGING INFORMATION

●SSOT-24 (unit:mm)

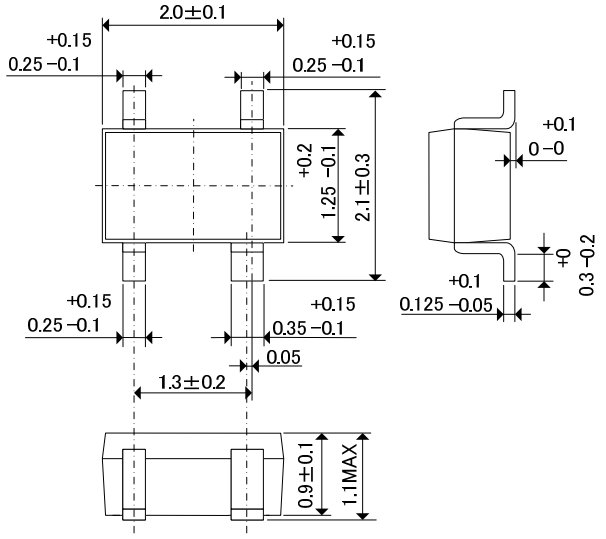


●USPN-4B02 (unit:mm)

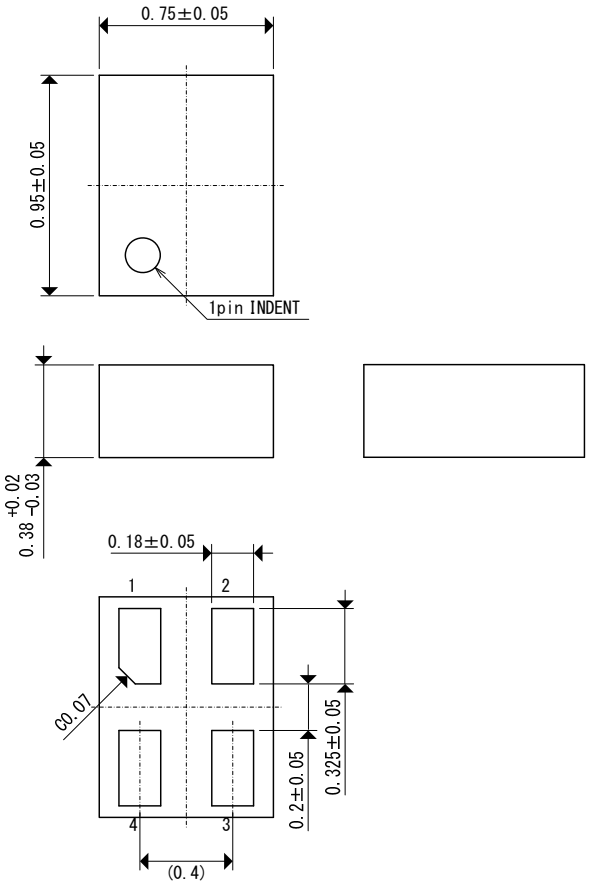


●USPN-4B02 Reference Pattern Layout (unit : mm)

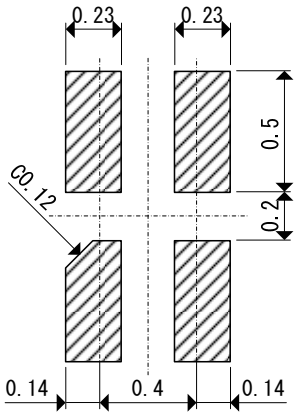


●USPN-4B02 Reference Metal Mask Design (unit : mm)

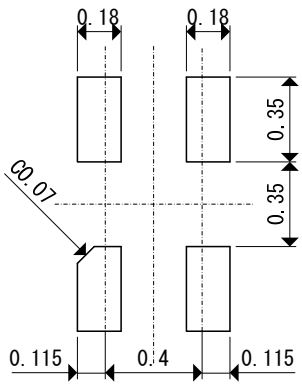

## ■MARKING RULE

SSOT-24 (With the orientation bar at the top)

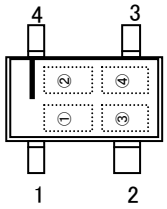


① represents product series, detect voltage range and output configuration.

| MARK | OUTPUT CONFIGURATION | DETECT VOLTAGE RANGE[V] | PRODUCT SERIES |
|---|---|---|---|
| 1 | CMOS | 1.5～2.5 | XC6126C15A**-G ～ XC6126C25A**-G |
| 2 | CMOS | 2.6～5.5 | XC6126C26A**-G ～ XC6126C55A**-G |
| 3 | Nch | 1.5～2.5 | XC6126N15A**-G ～ XC6126N25A**-G |
| 4 | Nch | 2.6～5.5 | XC6126N26A**-G ～ XC6126N55A**-G |

② represents detect voltage.

| MARK | DETECT VOLTAGE (V) | | MARK | DETECT VOLTAGE (V) | | MARK | DETECT VOLTAGE (V) | |
|---|---|---|---|---|---|---|---|---|
| 0 | - | 2.6 | A | - | 3.6 | N | 1.6 | 4.6 |
| 1 | - | 2.7 | B | - | 3.7 | P | 1.7 | 4.7 |
| 2 | - | 2.8 | C | - | 3.8 | R | 1.8 | 4.8 |
| 3 | - | 2.9 | D | - | 3.9 | S | 1.9 | 4.9 |
| 4 | - | 3.0 | E | - | 4.0 | T | 2.0 | 5.0 |
| 5 | - | 3.1 | F | - | 4.1 | U | 2.1 | 5.1 |
| 6 | - | 3.2 | H | - | 4.2 | V | 2.2 | 5.2 |
| 7 | - | 3.3 | K | - | 4.3 | X | 2.3 | 5.3 |
| 8 | - | 3.4 | L | - | 4.4 | Y | 2.4 | 5.4 |
| 9 | - | 3.5 | M | 1.5 | 4.5 | Z | 2.5 | 5.5 |

③④ represents production lot number
01 to 09, 0A to 0Z, 11 to 9Z, A1 to A9, AA to AZ, B1 to ZZ repeated
(G, I, J, O, Q, W excluded)
*No character inversion used.

## ■MARKING RULE (Continued)

USPN-4B02

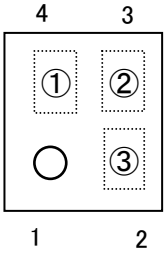


① represents product series, detect voltage range and output configuration.

| MARK | OUTPUT CONFIGURATION | DETECT VOLTAGE RANGE[V] | PRODUCT SERIES |
|---|---|---|---|
| 4 | CMOS | 1.5～2.5 | XC6126C15A**-G ～ XC6126C25A**-G |
| 5 | CMOS | 2.6～5.5 | XC6126C26A**-G ～ XC6126C55A**-G |
| 6 | Nch | 1.5～2.5 | XC6126N15A**-G ～ XC6126N25A**-G |
| 7 | Nch | 2.6～5.5 | XC6126N26A**-G ～ XC6126N55A**-G |

② represents detect voltage.

| MARK | DETECT VOLTAGE (V) | | MARK | DETECT VOLTAGE (V) | | MARK | DETECT VOLTAGE (V) | |
|---|---|---|---|---|---|---|---|---|
| 0 | - | 2.6 | A | - | 3.6 | N | 1.6 | 4.6 |
| 1 | - | 2.7 | B | - | 3.7 | P | 1.7 | 4.7 |
| 2 | - | 2.8 | C | - | 3.8 | R | 1.8 | 4.8 |
| 3 | - | 2.9 | D | - | 3.9 | S | 1.9 | 4.9 |
| 4 | - | 3.0 | E | - | 4.0 | T | 2.0 | 5.0 |
| 5 | - | 3.1 | F | - | 4.1 | U | 2.1 | 5.1 |
| 6 | - | 3.2 | H | - | 4.2 | V | 2.2 | 5.2 |
| 7 | - | 3.3 | K | - | 4.3 | X | 2.3 | 5.3 |
| 8 | - | 3.4 | L | - | 4.4 | Y | 2.4 | 5.4 |
| 9 | - | 3.5 | M | 1.5 | 4.5 | Z | 2.5 | 5.5 |

③ represents production lot number
0 to 9, A to Z repeated. (G, I, J, O, Q, W excluded)
*No character inversion used.

1. The products and product specifications contained herein are subject to change without notice to improve performance characteristics. Consult us, or our representatives before use, to confirm that the information in this datasheet is up to date.
2. We assume no responsibility for any infringement of patents, patent rights, or other rights arising from the use of any information and circuitry in this datasheet.
3. Please ensure suitable shipping controls (including fail-safe designs and aging protection) are in force for equipment employing products listed in this datasheet.
4. The products in this datasheet are not developed, designed, or approved for use with such equipment whose failure of malfunction can be reasonably expected to directly endanger the life of, or cause significant injury to, the user.
   (e.g. Atomic energy; aerospace; transport; combustion and associated safety equipment thereof.)
5. Please use the products listed in this datasheet within the specified ranges.
   Should you wish to use the products under conditions exceeding the specifications, please consult us or our representatives.
6. We assume no responsibility for damage or loss due to abnormal use.
7. All rights reserved. No part of this datasheet may be copied or reproduced without the prior permission of TOREX SEMICONDUCTOR LTD.

**TOREX SEMICONDUCTOR LTD.**

# OCEAN CHIPS
## Океан Электроники
### Поставка электронных компонентов

Компания «Океан Электроники» предлагает заключение долгосрочных отношений при поставках импортных электронных компонентов на взаимовыгодных условиях!

Наши преимущества:

- Поставка оригинальных импортных электронных компонентов напрямую с производств Америки, Европы и Азии, а так же с крупнейших складов мира;
- Широкая линейка поставок активных и пассивных импортных электронных компонентов (более 30 млн. наименований);
- Поставка сложных, дефицитных, либо снятых с производства позиций;
- Оперативные сроки поставки под заказ (от 5 рабочих дней);
- Экспресс доставка в любую точку России;
- Помощь Конструкторского Отдела и консультации квалифицированных инженеров;
- Техническая поддержка проекта, помощь в подборе аналогов, поставка прототипов;
- Поставка электронных компонентов под контролем ВП;
- Система менеджмента качества сертифицирована по Международному стандарту ISO 9001;
- При необходимости вся продукция военного и аэрокосмического назначения проходит испытания и сертификацию в лаборатории (по согласованию с заказчиком);
- Поставка специализированных компонентов военного и аэрокосмического уровня качества (Xilinx, Altera, Analog Devices, Intersil, Interpoint, Microsemi, Actel, Aeroflex, Peregrine, VPT, Syfer, Eurofarad, Texas Instruments, MS Kennedy, Miteq, Cobham, E2V, MA-COM, Hittite, Mini-Circuits, General Dynamics и др.);

Компания «Океан Электроники» является официальным дистрибьютором и эксклюзивным представителем в России одного из крупнейших производителей разъемов военного и аэрокосмического назначения **«JONHON»**, а так же официальным дистрибьютором и эксклюзивным представителем в России производителя высокотехнологичных и надежных решений для передачи СВЧ сигналов **«FORSTAR»**.

AVIC JONHON

**«JONHON»** (основан в 1970 г.)

Разъемы специального, военного и аэрокосмического назначения:

(Применяются в военной, авиационной, аэрокосмической, морской, железнодорожной, горно- и нефтедобывающей отраслях промышленности)

**«FORSTAR»** (основан в 1998 г.)

ВЧ соединители, коаксиальные кабели, кабельные сборки и микроволновые компоненты:

(Применяются в телекоммуникациях гражданского и специального назначения, в средствах связи, РЛС, а так же военной, авиационной и аэрокосмической отраслях промышленности).

FORSTAR®

Телефон: 8 (812) 309-75-97 (многоканальный)
Факс: 8 (812) 320-03-32
Электронная почта: ocean@oceanchips.ru
Web: http://oceanchips.ru/
Адрес: 198099, г. Санкт-Петербург, ул. Калинина, д. 2, корп. 4, лит. А