Date : September 05.2012

To: PIEキャラバン

PRODUCT REFERENCE DATA SHEET

Product Description	:	ZNR SURGE ABSORBER
Product Part Number	:	ERZE07A□□□
	:	ERZE07A□□□CS
	:	ERZE07B□□□CS
	:	ERZE07E□□□
	:	ERZE07F□□□

Circuit Components Business Unit
Industrial Devices Company,
Panasonic Corporation

1037-2 Kamiosatsu, Chitose City,
Hokkaido 066-8502 Japan

Prepared by : Engineering Section
Contact Person : Masayoshi Kanazawa
Title : Charge

Check by : Masashi Goto
Title : Engineer

Panasonic

[HANDLING PRECAUTIONS]

⚠Precautions for Safety

In the case that a ZNR surge absorber (Type D, Series E) (hereafter referred to as the ZNR ,or product name) is used , if an abnormality takes place because of peripheral conditions of the ZNR (material, environments, power source conditions, circuit conditions, etc. in equipment design), fire, electric shock, burn, or product failure may be occur.
The precautions for this product are described below, understand the content thoroughly before usage.
For more questions, contact us.

1. ⚠ Precautions to be strictly observe

1.1 Confirmation of performance ratings

Use the ZNR within its rated range of performance such as the Max. allowable voltage, withstanding surge current, withstanding energy, impulse life (surge life), average pulse power, and operating temperature range. If used outside the range, the ZNR can be degrade and have element fracture, which may result in smoking and ignition.

1.2 To avoid accidents due to unexpected phenomena, take the following measures

1) In the event of fracture of the ZNR, its pieces may scatter ; hence, put the case or cover of the set product in place.

2) Do not install the ZNR near combustible substances (polyvinyl chloride wires, resin moldings, etc.).
If it is difficult to do, install a nonflammable cover.

3) Across-the-line use
When the ZNR is used across a line, put a current fuse in series with the ZNR.
(Refer to Item 2.1, 1) (4) and Table 1.)

4) Use between line to ground

(1) In the case that the ZNR is used between a line to the ground, the short-circuit of the ZNR may not blow the current fuse because of grounding resistance, which may cause smoking and ignition of the ZNR's exterior resin. As the measure against it, install an earth leakage breaker on the power supply side of the ZNR position. If no earth leakage breaker is installed, use a thermal fuse together with a current fuse in series. (Refer to Table 1.)

(2) In the case that the ZNR is used between a live part and metal case, a electric shock may develop at a short circuit of the ZNR ; hence, ground the metal case to the ground or keep it from the human body.

2. Application notes

2.1 Pay attention to the following items to avoid the shortened life and failure of the ZNR

1) Circuit conditions

(1) Select a ZNR of which the maximum voltage including fluctuations in source voltage allows for the maximum permissible circuit voltage. (Refer to Table 1.)

(2) In cases that surges are intermittently applied at short intervals (for example, in the case that the voltage of the noise simulator test is impressed), do not cause them to exceed the ZNR's rated pulse power.

(3) Select a ZNR recommended in Table 1.

<1> Across the Line (Line to Line) use
If possible, use a part No. marked with * incase of voltage temporarily rises load unbalance of separately-wired loads, short between hot and neutral-line, open of neutral line in single-phase-three-wired system, and due to resonance at switching for a capacitive, inductive load.

Note/Revision

<2> Used between line to ground
Use a different Part No. from "Across-the-line use" as table 1, because of raising voltage in case of "Line to Ground Fault".
Use a part No. marked with ** in table 1, in case of the insulation resistance test (500VDC) for equipment.
When using a part of the varistor voltage that the insulation efficiency examination can not be cleared, there is a case where the surge absorber can be done by removing it from the circuit depending on the circuit condition (Refer examination of Japan Domestic Safety Regulations).

(4) Concerning current fuse

<1> We recommended to selecting a ZNR and the rated current of a current fuse as follows.
Finally, please be sure that there is no danger if the ZNR mounted on equipment breaks.

Series	E5	E7	E10
Standard Part Numbers	ERZE05+++	ERZE07+++	ERZE10+++
Fuse rated current	5A max.	7A max.	10A max.

＊ Fuses shall use rated voltages appropriate for circuits.

<2> The recommended fuse position is shown in table 1, "Example of ZNR application", however, if the load current of protected equipment is larger than that of the above recommended fuse rated current, install a current fuse at the position shown below.

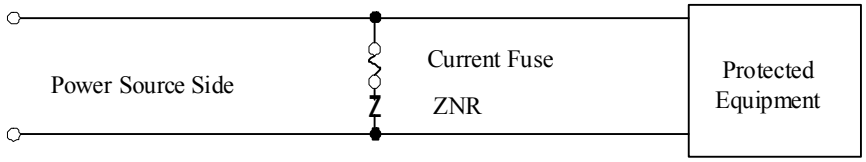

(5) Concerning thermal fuse
Set a thermal fuse to get high thermal conductivity with ZNR.

Note/Revision

Table 1 Example of ZNR application

	Measure against across-the-line surge	Measure against surge across the line and between the line and ground
Connection example	DC/AC single-phase 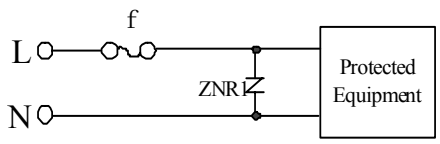 f : fuse	DC/AC single-phase 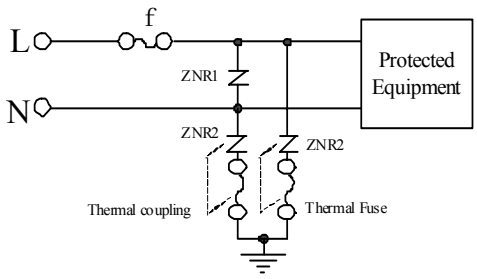 f : fuse
	AC 3-phase 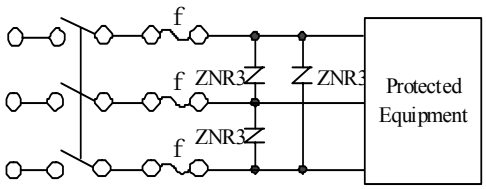 f : fuse	AC 3-phase 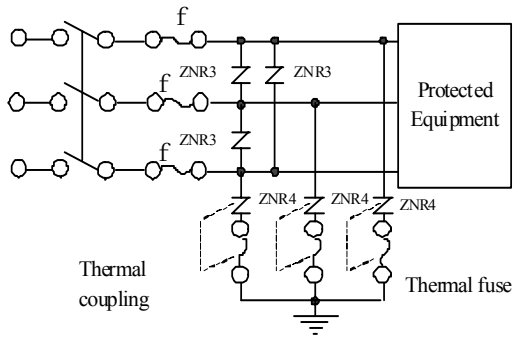 f : fuse

	Across the Line (Line to Line) use			Line to Ground use		
	ZNR	Source voltage	Nominal varistor voltage	ZNR	Source voltage	Nominal varistor voltage
Example of rating selection	ZNR1 ZNR3	AC100V	201 to 361*	ZNR2 ZNR4	AC100V～AC220V	471 511 621* 821**
		AC120V	241 to 431*			
		AC200V	471 to 621*			
		AC220V	471 to 621*		AC230V～AC240V	511 621* 821**
		AC240V	511,621*			
		AC380V	751,821*		AC380V	112**

Note/Revision

2) Operating environments

(1) The ZNR is designed to use indoors. Do not use it exposed outdoors.

(2) Do not use the ZNR in places exposed to temperatures beyond the operating temperature range, such as places exposed to sunlight and vicinities of heating equipment.

(3) Do not use the ZNR in places exposed to high temperatures and high humidity, such as places exposed directly to rain, wind, dew condensation, and vapor.

(4) Do not use the ZNR in dusty and salty places and atmospheres polluted by corrosive gases.

3) Processing conditions

(1) Do not wash the ZNR by such solvents (thinner, acetone, etc.) as its exterior resin deteriorates.

(2) Do not apply a strong vibration, shock (by falling, etc.) to the ZNR, cracking to its exterior resin and element may occur.

(3) When coating the ZNR with resin (including molding), do not use such resin.

(4) Do not bend the ZNR lead wires at the position close to its ZNR exterior resin, or apply external force to the position.

(5) When soldering the ZNR lead wires, follow the recommended condition and do not melt the solder and insulating materials constituting the ZNR.

Type D	Soldering Method	Recommended Condition	Attention
	Flow soldering	260deg.C, within 10sec.	Type D is not Reflow soldering object part.

*1 When using at the thing except the condition that it is possible to suggest to the above, confirm that there is not a problem.
The limit of the repair be once and go in solder temperature within 400deg.C and moreover within 5 seconds.

*2 Profile be careful because there is a margin of error in the way of measuring.

*3 The temperature depend on the size and the package density of the substrate.
Therefore, confirm every kind of the substrate.

● Soldering temperature-time profile to recommend

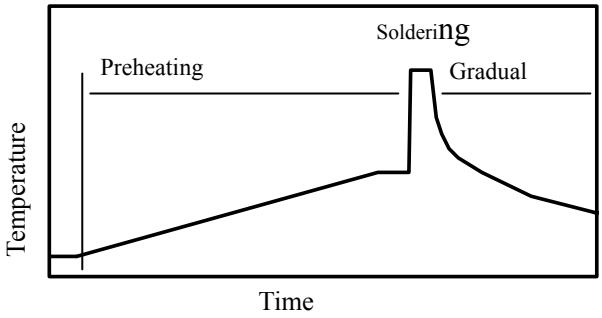

Preheating	The normal 130deg.C	max.120s
Soldering	max.260deg.C	max.10s
Gradual cooling	Gradual cooling	

Note/Revision

4) Long-term storage

(1) Do not store the ZNR under high temperatures and high humidity. Store it at temperature up to 40 degree-C and at humidity below 75%RH, and use it within two years.
Before using the ZNR that has been stored for a long period (two year or longer), confirm the solderability.

(2) Avoid atmospheres full of corrosive gases (hydrogen sulfide, sulfurous acid, chlorine, ammonia, etc.).

(3) Avoid direct sunlight and dew condensation.

3. Notices

3.1 In cases that the ZNR is used in equipment (aerospace equipment, medical equipment, etc.) requiring extremely high reliability, ask us for selection of part No., and protection coordination, etc. in advance.

3.2 There is possibility that the ZNR will unexpectedly smoke or ignite because of abnormal rise of the circuit voltage and invasion of excessive surge. To prevent that accident from spreading over the equipment and not to expand the damage, use multiplex protection such as the adoption of frame-retardant materials for housing parts and structural parts.

3.3 Package marking includes the product number, quantity, and country of origin. As a rule, country of origin should be indicated in English.

4. Substances of this product

4.1 This product not been manufactured with any ozone depleting chemical controlled under the Montreal Protocol.

4.2 This product comply with RoHS(Restriction of the use of certain Hazardous Substance in electrical and electronic equipment) Directive(2002/95/EC).

4.3 All the materials used in this part are registered material under the Law Concerning the Examination and Regulation of Manufacture, etc. of Chemical Substance

Note/Revision

[REFERENCE]

1. Scope, Part Numbers, Construction

1.1 Scope
This specification applies to the ZNR Surge Absorbers (Bulk Type).

1.2 Part Numbers

Explanation of Part Numbers

1	2	3	4	5	6	7	8	9	10	11	12
E	R	Z	E	0	7						
Product Code			Series							Design no.	

Series	
E05	Series E5
E07	Series E7
E08	Series E8
E10	Series E10
E11	Series E11
E14	Series E14

Lead Configuration		
symbol	Lead Configuration	Packaging
A	Straight Lead	Bulk
1) B	Crimped Lead	Bulk
2) E	Straight Lead	Taped
2) F	Crimped Lead	Taped

1) Cut Type
2) Series E5, E7, E8, E10, E11

Nominal Varistor Voltage

The first two digits are significant figures and the third one denotes the number of zeros following.

Note/Revision

1.3 Construction

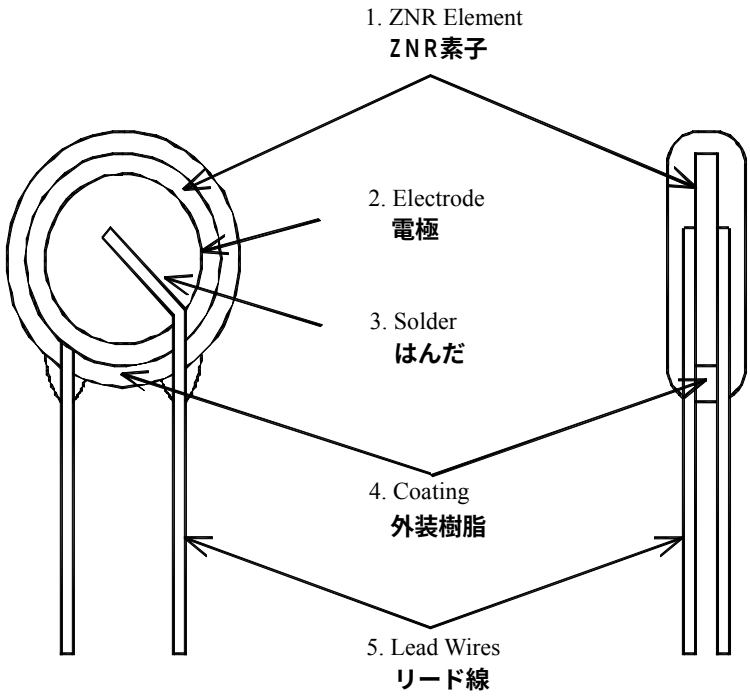

Item 部品名		Material 材質
1. ZNR Element ZNR素子		ZnO Ceramics etc. 酸化亜鉛 他
2. Electrode 電極		Silver 銀
3. Internal solder material 内部はんだ		Sn-Ag-Cu
4. Coating 外装樹脂		Epoxy Resin (UL94 V-0 Approved) エポキシ樹脂 (UL94 V-0 認定品)
5. Lead Wires リード線	Series : E5,E7 シリーズ : E5,E7	Tin(Sn100%) plated Copper-covered Steel 錫(Sn100%)メッキ銅覆鋼線
	Series : E8,E10,E11,E14 シリーズ : E8,E10,E11,E14	Tin(Sn100%) Plated Copper 錫(Sn100%)メッキ銅線

Note/Revision

2. Appearance, Dimensions

2.1 Appearance
Without dirt and crack, marking should be clear.
2.2 Dimensions
Refer to Figure 1.1 and 1.2 and table 1.1 to 1.3.

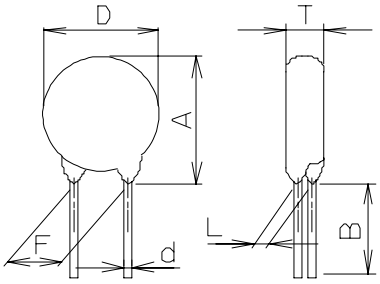

Fig. 1.1
Straight Lead Type
Part No ：ERZE**A□□□
Part No ：ERZE**A□□□CS

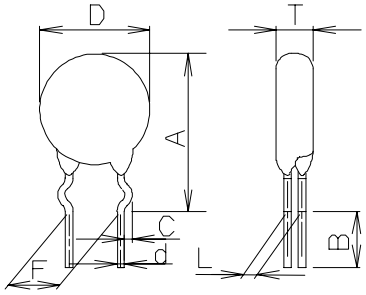

Fig. 1.2
Crimped Leads Cut Type
Part No：ERZE**B□□□CS

Note/Revision

3. Electrical Requirements

Listed below of Specifications, Test Specifications, and Test Methods.
Individual specifications is in the table 2 .

Characteristics		Specifications	Test Specifications	
3.1	Max. allowable voltage	AC：Table 2 DC：Table 2		
3.2	Rated wattage	Table 2		
3.3	Varistor voltage	V_1 ：Table 2	Measuring current :	1mA DC
3.4	Clamping voltage	Table 2	Measuring current :	Table 2
			Current Waveform :	8/20μs
3.5	Maximum peak current (Withstanding surge current)	1pulse：Table 2	Impulse :	8/20μs
		2pulse：Table 2	Impulse :	8/20μs at interval 5min
3.6	Maximum energy	Table 2	Impulse :	2ms, 1 pulse
		Table 2	Impulse :	10/1000μs, 1pulse
3.7	Temperature coefficientof varistor voltage	0 to -0.05%/deg.C	Measured voltage :	V_1
			Temp. range :	＋25deg.C to ＋85deg.C
3.8	Capacitance	Table 2	Measuring frequency :	1kHz 1MHz (below 100pF)
3.9	Dielectric loss	Table 2	Measuring frequency :	1kHz 1MHz (below 100pF)
3.10	Withstand voltage	No breakdown	Applied voltage :	Table 2
			Time :	1min

Note/Revision

Characteristics		Test Methods/Description
	Standard test condition	Environmental conditions under which every measuring is done without doubt on the measuring results. Unless specially, specified, temperature, relative humidity are 5deg.C to 35deg.C, 45 to 85%RH. respectively.
3.1	Maximum allowable voltage	The maximum Sine wave voltage (rms) that can be applied continuously or maximum DC voltage in the specified environmental temperature range.
3.2	Rated wattage	The maximum power to be loaded with in the specified environmental temperature
3.3	Varistor voltage	Voltage between both terminals of ZNR measured when CmA of DC current is applied under standard conditions. It is called Vc. Measuring the varistor voltage should be made promptly to avoid heat affection.
3.4	Clamping voltage	The maximum voltage between two terminals with the specified standard impulse current (8/20μs).
3.5	Maximum peak current (Withstanding surge current)	The maximum current within the varistor voltage change of ±10% with the standard impulse (8/20μs) applied by the specified condition.
3.6	Maximum energy	The maximum energy within the varistor voltage change of ±10% when the specified impulse is applied.
3.7	Temperature coefficient of varistor voltage	Coefficient indicating dependency of varistor voltage on specified temperature.
3.8	Capacitance	Capacitance shall be measured at 1kHz±10%、1Vrms max. (1MHz±10% below 100pF)、0V bias and 20±2deg.C.
3.9	Dielectric loss	Dielectric loss tangent shall be measured at 1kHz±10%、1Vrms max. (1MHz±10% below 100pF)、0V bias and 20±2deg.C.
3.10	Withstand voltage	The specified voltage shall be applied both terminals of the specimen connected together and metal foil closely wrapped round its body for 1 minute.
Note : Varistor Voltage change of forward direction shall be measured in the test of uni-pole surge life and DC load life.		

Note/Revision

4. Mechanical Requirements

Listed below of Specifications, Test Specifications, and Test Methods.

Characteristics		Specifications	Test Specifications
4.1	Robustness of terminations (Tensile)	No outstanding damage	Force : 9.8N(Series E5,E7,E8,E10,E11) 19.6N(Series E14) Time : 10 sec
4.2	Robustness of terminations (Bending)	No outstanding damage	Force : 4.9N(Series E5,E7,E8,E10,E11) 9.8N(Series E14)
4.3	Vibration	No outstanding damage	Frequency : 10 to 55Hz Amplitude : 0.75mm Time : each 2 hours
4.4	Solderability	Minimum 95% of the terminals should be covered with solder uniformly	Solder temp. : 235+/-5deg.C Immersed time : 2+/-0.5s
4.5	Resistance to soldering heat	ΔV1 ≦+/- 5%	Solder temp. : 260+/-5deg.C Immersed time : 10+/-1sec

Characteristics		Test Methods/Description
4.1	Robustness of terminations (Tensile)	After gradually applying the specified load and keeping the unit fixed for 10 sconds, the terminal shall be visually examined for any damage.
4.2	Robustness of terminations (Bending)	The unit shall be secured with its terminals kept vertical and the specified load is applied, gradually bent by 90° in one direction, back to the original position, then 90° in the opposite direction, and again back to the original position. The damage of the terminals is visually examined.
4.3	Vibration	After repeatedly applying a single harmonic vibration (amplitude ; 0.75mm ; double amplitude ; 1.5mm with 1 minute vibration frequency cycles(10Hz to 55Hz to 10Hz) to each of three perpendicular directions for 2 hours. The varistor shall then be visually examined.
4.4	Solderability	After dipping the terminals to a depth of about 3mm from the body, in the melted solder of 235+/-5deg.C for 2+/-0.5 seconds, the terminals are visually examined.
4.5	Resistance to Soldering Heat	After each lead shall be dipped into a solder bath having a temperature 260+/-5deg.C to a point 2.0～2.5mm from the body of the unit, be held there for specified time, and then be stored at room temperature and humidity for 1 to 2 hour. The change of Vc and mechanical damages are examined.
Note : Varistor Voltage change of forward direction shall be measured in the test of uni-pole surge life and DC load life.		

Note/Revision

5. Environmental Requirements

Listed below of Specifications, Test Specifications, and Test Methods.
Individual specifications is in the table 2.1 to 2.3 .

Characteristics		Specifications	Test Specifications
5.1	High temperature storage (Dry heat)	ΔV1 ≦ +/- 5%	Ambient temp. : 125+/-2deg.C Time : 1000h
5.2	Damp heat	ΔV1 ≦+/- 5%	Ambient condition : 40+/-2deg.C, .0 to 95%RH Time : 1000h
5.3	Low temperature storage (Cold)	ΔV1 ≦+/- 5%	Ambient temp. : -40+/-2deg.C Time : 1000 h
5.4	Heat cycle	ΔV1 ≦+/- 5% No outstanding damage	Step / Temp. / Period 1 / −40+/-3deg.C / 30min. 2 / Room Temp. / 15min. 3 / ＋125+/-2deg.C / 30min. 4 / Room Temp. / 15min. 5 cycles
5.5	High temperature load (Dry heat load)	ΔV1 ≦+/- 10%	Ambient temp. : 85+/-2deg.C Time : 1000 h
5.6	Damp heat load	ΔV1 ≦+/- 10%	Ambient condition : 40+/-2deg.C, 90 to 95%RH. Time : 1000 h
5.7	Impulse life I (Surge life I)	ΔV1 ≦+20% / -0% at listed table 2.	Impulse : 8/20μs Applied condition : 10^4 times by interval 10s
5.8	Impulse life II (Surge life II)	ΔV1 ≦+20% / -0% at listed table 2	Impulse : 8/20μs Applied condition : 10^5 times by interval 10s
Operating Temperature Range		-40deg.C to + 85deg.C	
Storage Temperature Range		-40deg.C to +125deg.C	

Note/Revision

Characteristics		Test Methods/Description
5.1	High temperature storage (Dry heat)	The specimen shall be subjected to 125+/-2deg.C for 1000 hours in a thermostatic bath without load and then stored at room temperature and humidity for 1 to 2 hours. Thereafter, the change of Vc shall be measured.
5.2	Damp heat	The specimen shall be subjected to 40+/-2deg.C, 90 to 95%RH for 1000 hours without load and then stored at room temperature and humidity for 1 to 2 hours. Thereafter, the change of Vc shall be measured.
5.3	Low temperature storage (Cold)	The specimen shall be subjected to －40+/-2deg.C without load for 1000 hours and then stored at room temperature for 1 to 2 hours. Thereafter, the change of Vc shall be measured.
5.4	Heat cycle	The temperature cycling shall be repeated 5 times and stored at room temperature and humidity for 1 to 2 hours. The change of Vc as well as mechanical damage shall be examined.
5.5	High temperature load (Dry heat load)	After being continuously applied the maximum allowable voltage at 85+/-2deg.C for 1000 hours, the specimen shall be stored at room temperature and humidity for 1 to 2 hours. Thereafter, the change of Vc shall be measured.
5.6	Damp heat load	The specimen shall be subjected to 40+/-2deg.C, 90 to 95%RH and the maximum allowable voltage for 1000 hours and then stored at room temperature and humidity for 1 to 2 hours. Thereafter, the change of Vc shall be measured.
5.7	Impulse life I (Surge life I)	After the specified impulse is applied 10000 times continuously with the interval 10 seconds at room temperature, the specimen shall be stored at room temperature and humidity for 1 to 2 hours. Thereafter, the change of Vc shall be measured.
5.8	Impulse life II (Surge life II)	After the specified impulse is applied 100000 times continuously with the interval 10 seconds at room temperature, the specimen shall be stored at room temperature and humidity for 1 to 2 hours. Thereafter, the change of Vc shall be measured.
Note : Varistor Voltage change of forward direction shall be measured in the test of uni-pole surge life and DC load life.		

Individual specifications of Dimensions and Electrical Requirements and Environmental Requirements are indicated below.

Dimensions : Table 1.1 to 1.3
Electrical Requirements : Table 2
Environmental Requirements : Table 2

Note/Revision

Table 1.1 Series E7 Straight Lead Type

品番 Part No.	付図番号 Fig. No.	D max. (mm)	A max. (mm)	T max. (mm)	F +/-1.0 (mm)	L +/-1.0 (mm)	B min. (mm)	C +/-0.4 (mm)	Φd +/- (mm)	1)Weight Approx. (g)
ERZE07A201	付図 1.1 Fig. 1.1	9.0	12.0	5.3	7.5	3.1	20.0	-	0.80 +0.08 -0.05	0.7
ERZE07A221				5.4		3.3				0.8
ERZE07A241				5.5		3.3				0.8
ERZE07A271				5.7		3.5				0.9
ERZE07A331				6.0		3.8				1.0
ERZE07A361				6.2		3.9				1.0
ERZE07A391				6.3		4.0				1.0
ERZE07A431				6.5		4.1				1.1
ERZE07A471				6.8		4.3				1.2
ERZE07A511				7.0		4.5				1.2
ERZE07A561				7.4		4.8				1.3
ERZE07A621		10.0	13.0	7.8		5.0				1.4

1)参考値, Typical

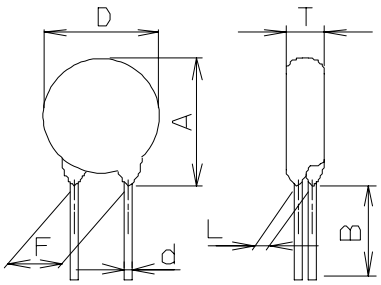

Fig. 1.1

Straight Lead Type

Part No. ： ERZE**A□□□

Part No. ： ERZE**A□□□CS

Note/Revision

Table 1.2 Series E7 Straight Leads Cut Type

品番 Part No.	付図番号 Fig. No.	D max. (mm)	A max. (mm)	T max. (mm)	F +/-1.0 (mm)	L +/-1.0 (mm)	B +/-1.0 (mm)	C +/-0.4 (mm)	Φd +/- (mm)	1)Weight Approx. (g)
ERZE07A201CS	付図 1.1 Fig. 1.1	9.0	12.0	5.3	7.5	3.1	4.0	-	0.80 +0.08 -0.05	0.7
ERZE07A221CS				5.4		3.3				0.8
ERZE07A241CS				5.5		3.3				0.8
ERZE07A271CS				5.7		3.5				0.9
ERZE07A331CS				6.0		3.8				1.0
ERZE07A361CS				6.2		3.9				1.0
ERZE07A391CS				6.3		4.0				1.0
ERZE07A431CS				6.5		4.1				1.1
ERZE07A471CS				6.8		4.3				1.2
ERZE07A511CS				7.0		4.5				1.2
ERZE07A561CS				7.4		4.8				1.3
ERZE07A621CS		10.0	13.0	7.8		5.0				1.4

1)参考値, Typical

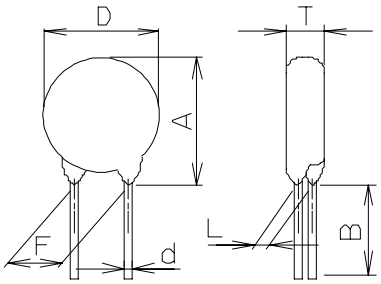

Fig. 1.1

Straight Lead Type

Part No. ： ERZE**A□□□

Part No. ： ERZE**A□□□CS

Note/Revision

Table 1.3 Series E7 Crimped Leads Cut Type

品番 Part No.	付図番号 Fig. No.	D max. (mm)	A max. (mm)	T max. (mm)	F +/-1.0 (mm)	L +/-1.0 (mm)	B +/-1.0 (mm)	C +/-0.4 (mm)	Φd +/- (mm)	1)Weight Approx. (g)
ERZE07B201CS	付図 1.2 Fig. 1.2	9.0	15.0	5.3	7.5	3.1	4.0	1.4	0.80 +0.08 -0.05	0.7
ERZE07B221CS				5.4		3.3				0.8
ERZE07B241CS				5.5		3.3				0.8
ERZE07B271CS				5.7		3.5				0.9
ERZE07B331CS				6.0		3.8				1.0
ERZE07B361CS				6.2		3.9				1.0
ERZE07B391CS				6.3		4.0				1.0
ERZE07B431CS				6.5		4.1				1.1
ERZE07B471CS				6.8		4.3				1.2
ERZE07B511CS				7.0		4.5				1.2
ERZE07B561CS				7.4		4.8				1.3
ERZE07B621CS		10.0	16.0	7.8		5.0				1.4

1)参考値, Typical

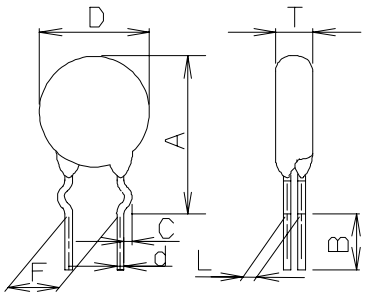

Fig. 1.2
Crimped Leads Cut Type
Part No. ： ERZE**B□□□CS

Note/Revision

Table 2 Series E7

Part Numbers symbol : * is A or B , ++ is none or GS

Part Number	Applicable Standards: Abbreviation of Part No.	Applicable Standards: 1)Authorized Standard	Electrical: Maximum Allowable Voltage ACrms (V)	Maximum Allowable Voltage DC (V)	Rated watt-age (W)	Varistor Voltage (V)	Clamping Voltage (max.) VxA(V)	Clamping Voltage (max.) xA	Maximum Peak Curent 1 time (A)	Maximum Peak Curent 2 times (A)	Maximum Energy 2ms (J)	Maximum Energy 10/1000 μs (J)	Capacitance (max.) 1kHz (pF)	Di-electric Loss (max.) 1kHz (%)	With-stand voltage (max.) (V)	Environmental: Impulse Life (Surge Life) I (A)	Impulse Life (Surge Life) II (A)
ERZE07*201++	E7201	○☆	130	170	0.25	185 to 225	340	25	2500	1250	19	26	430	10	1500	100	70
ERZE07*221++	E7221	○☆	140	180	0.25	198 to 242	360	25	2500	1250	22	30	410	10	1500	100	70
ERZE07*241++	E7241	○☆	150	200	0.25	216 to 264	395	25	2500	1250	24	33	380	10	1500	100	70
ERZE07*271++	E7271	○☆	175	225	0.25	247 to 303	455	25	2500	1250	28	39	350	10	1500	100	70
ERZE07*331++	E7331	○☆	210	270	0.25	297 to 363	545	25	2500	1250	32	44	300	10	1500	100	70
ERZE07*361++	E7361	○☆	230	300	0.25	324 to 396	595	25	2500	1250	36	50	300	10	1500	100	70
ERZE07*391++	E7391	○☆	250	320	0.25	351 to 429	650	25	2500	1250	38	53	300	10	1500	100	70
ERZE07*431++	E7431	○☆	275	350	0.25	387 to 473	710	25	2500	1250	43	60	270	10	1500	100	70
ERZE07*471++	E7471	○☆	300	385	0.25	423 to 517	775	25	2500	1250	47	65	230	10	1500	100	70
ERZE07*511++	E7511	○☆	320	410	0.25	459 to 561	845	25	2500	1250	50	70	210	10	1500	100	70
ERZE07*561++	E7561	○☆	350	450	0.25	504 to 616	930	25	2500	1250	55	75	200	10	1500	100	70
ERZE07*621++	E7621	○☆	385	505	0.25	558 to 682	1025	25	2500	1250	60	80	190	10	1500	100	70

1) Authorized Standard

○:UL1449 Ed.3, ●:UL1449 Ed.3 Type3(or Code-Connected and Direct plug-in) , ◎:UL1449 Ed.3 Type2(or Permanently Connected)

☆:VDE(IEC61051-1, -2, -2-2), ★:VDE(IEC60950-1 Ed.2 Annex.Q)

※Approval number (File No.) of safety regulations are subject to revision without notice. Ask factory for a copy of the latest file No..

Note/Revision

6. Marking Contents

Refer to table 3.
Applicable Part No.：ERZE07A□□□, ERZE07A□□□CS, ERZE07B□□□CS

Table 3.
Part Numbers symbol : ++is None or CS.

Part Number 品番	Marking Contents 表示の内容
ERZE07A(B)201++ to ERZE07A(B)621++	ZNR E7□□□ ○◆◇

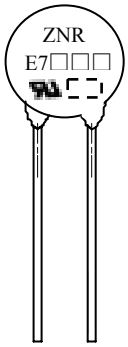

部品表示の一例
Example

Explanation of the content 内容の説明	
ZNR	Product Name 品名
E7□□□	Registered Part No.(VDE) Type Designation(UL), 登録品番 □□□･･･ Nominal Varistor Voltage 公称バリスタ電圧略称
	UL Recognized Component Mark UL 認定マーク
○	Factory Identification Marking 工場識別コード None 表記なし ･･･Japan 日本国 Q ･･･Indonesia インドネシア
◆	Year Code(example) 年コード(例)

2010	0	2020	K	2030	0
2011	1	2021	A	2031	1
⋮	⋮	⋮	⋮	⋮	⋮
2018	8	2028	H	2038	8
2019	9	2029	J	2039	9

・ When the tens digit of Christian era is even number, an alphabetic character (1:A, 2:B...9:J, 0:K, I is excluded.) shall be used for the abbreviation of end of Christian era.
・西暦年の＋の位が偶数年は末尾略称に英字(1:A,2:B…9:J,0:K, I を除く)を使用する。
・ When the tens digit of Christian era is odd number, a numeric character (End of Christian era) shall be used for the abbreviation of end of Christian era.
・西暦年の＋の位が奇数年は末尾略称に数字(西暦末尾)を使用する。

◇ Monthly Code
月コード

Jan.	1	Jul.	7
Feb.	2	Aug.	8
Mar.	3	Sep.	9
Apr.	4	Oct.	O
May.	5	Nov.	N
Jun.	6	Dec.	D

Note/Revision

7. Packing

7.1 Packing quantity shall be shown Table 4.
7.2 ZNR Surge Absorbers shall be packed in plastic bag, and then packed into carton box.
7.3 Dimensions of packing materials and marking on the packing materials shall be shown Fig. 2.1 and Fig. 2.2

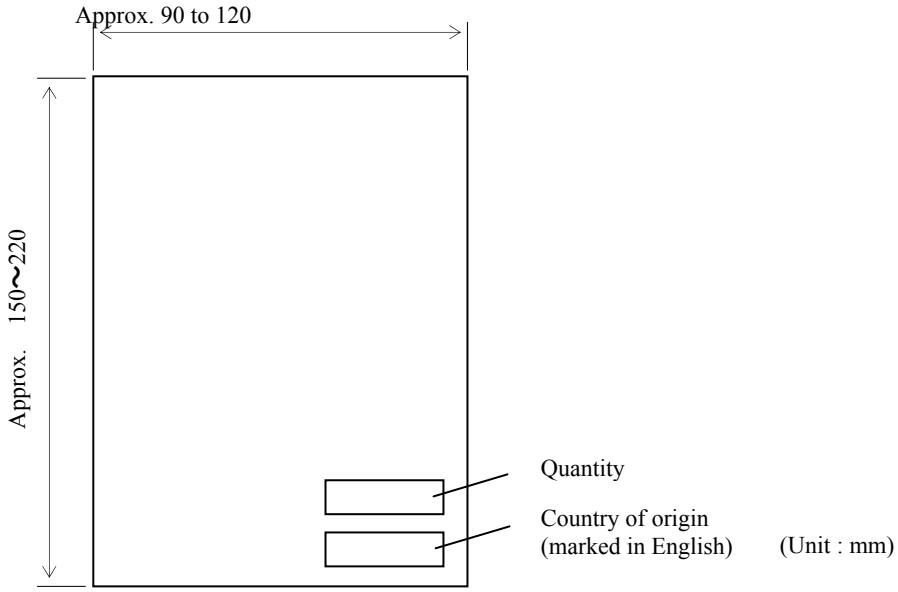

Fig 2.1 Bag

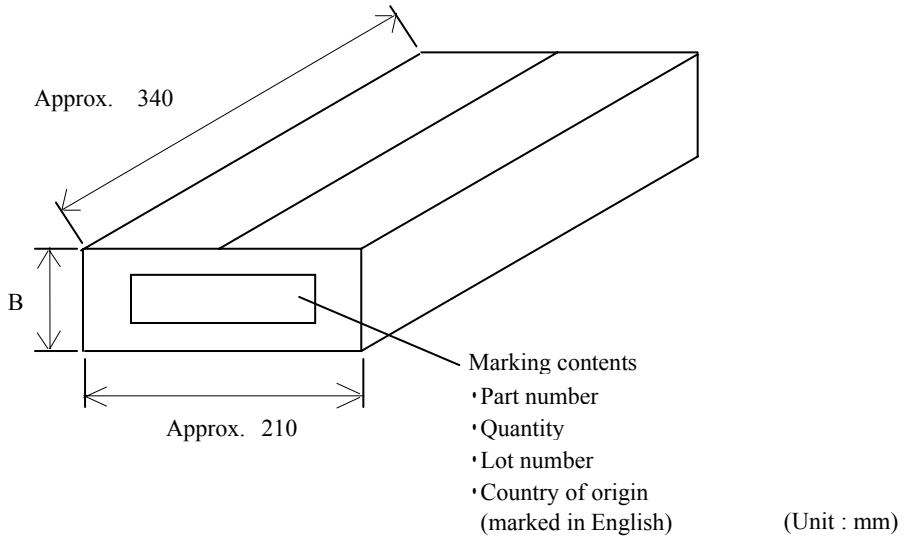

Fig 2.2 Carton box

Note/Revision

Table 4 Series E7
Part Numbers symbol : * is A or B

Part Numbers	Quantity in Packing Unit pcs.	Packing Quantity in Carton pcs.	Dimension B (mm)
ERZE07A201 to ERZE07A621	50	3,000	Approx. 110
ERZE07*201CS to ERZE07*3911CS	100	4,000	Approx. 110
ERZE07*431CS to ERZE07*621CS	50	4,000	Approx. 110

Note/Revision

7.4 Packing Indication Contents of Label

7.4.1 Bar Code Label Specification

Bar code symbology	:EIAJ Code39
Label size	:90.0 mm x 45.0 mm
Bar code height	:5 mm
Bar code dimension	
Wide element width	:0.334 mm
Narrow/Wide bar ratio	:1:2
Inter character gap	:0.167 mm
Quiet zone	:3.81 mm
Bar code resolution	:11.70 character/inch

7.4.2 Bar Code Contents

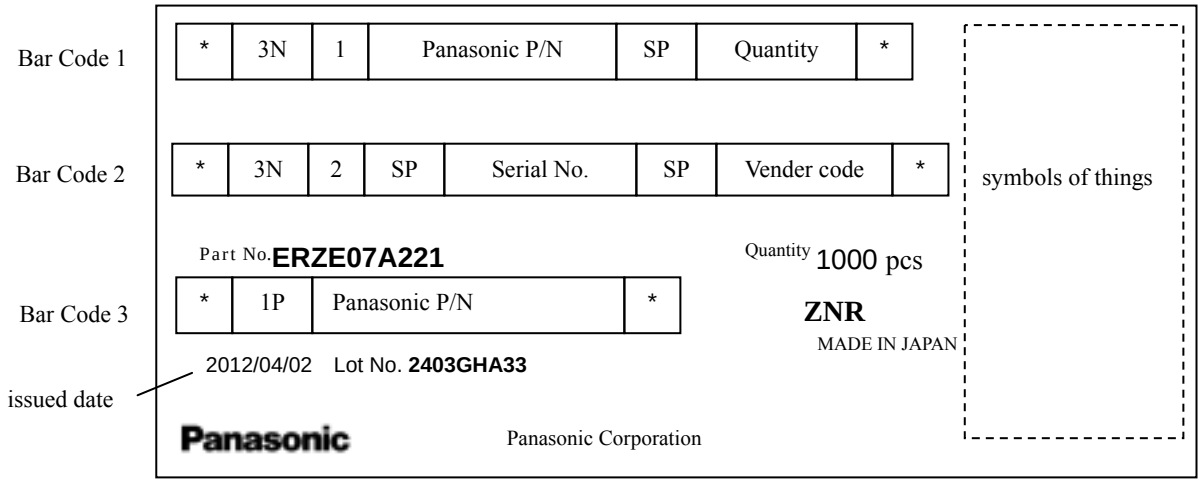

7.4.3 Constitution of Lot No.

2 4 03 GH A33
| | day Fix Consecutive No(ex. A01,A02,…,A99,B01,…)
| Month(1,2,…..9,O,N,D)
Year(Last digit)

7.4.4 Label Form and Examples (ERZE07A221)

Note/Revision

8. Country of origin

8.1 Country of origin	Japan	Indonesia
8.2 Factory name	Panasonic Corporation	PT. Panasonic Industrial Devices Batam
8.3 Address	1037-2 Kamiosatsu, Chitose City, Hokkaido 066-8502 Japan	Puri Industrial Park 2000, Batam Centre, Kelurahan Baloi Permai Batam
8.4 Factory Identification Method	Factory Identification Marking : None	Factory Identification Marking : Q

Note/Revision

[PRECAUTIONS FOR HANDLING]

⚠Precautions for Safety

In the case that a ZNR surge absorber (Type D, Series E) (hereafter referred to as the ZNR ,or product name) is used in mounted condition, if an abnormality takes place because of peripheral conditions of the ZNR (material, environments, power source conditions, circuit conditions, etc. in equipment design), fire, electric shock, burn, or product failure may be occur.
The precautions for this product are described below, understand the content thoroughly before usage.
For more questions, contact us.

1. ⚠Precautions to be strictly observe

1.1 Confirmation of performance ratings

Use the ZNR within its rated range of performance such as the Max. allowable voltage, withstanding surge current, withstanding energy, impulse life (surge life), average pulse power, and operating temperature range. If used outside the range, the ZNR can be degrade and have element fracture, which may result in smoking and ignition.

1.2 To avoid accidents due to unexpected phenomena, take the following measures

1) In the event of fracture of the ZNR, its pieces may scatter ; hence, put the case or cover of the set product in place.
2) Do not install the ZNR near combustible substances (polyvinyl chloride wires, resin moldings, etc.).
If it is difficult to do, install a nonflammable cover.
3) Across-the-line use
When the ZNR is used across a line, put a current fuse in series with the ZNR.
(Refer to Item 2.1, 1) (4) and Table 1.)
4) Use between line to ground
(1) In the case that the ZNR is used between a line to the ground, the short-circuit of the ZNR may not blow the current fuse because of grounding resistance, which may cause smoking and ignition of the ZNR's exterior resin. As the measure against it, install an earth leakage breaker on the power supply side of the ZNR position. If no earth leakage breaker is installed, use a thermal fuse together with a current fuse in series. (Refer to Table 1.)
(2) In the case that the ZNR is used between a live part and metal case, a electric shock may develop at a short circuit of the ZNR ; hence, ground the metal case to the ground or keep it from the human body.

2. Application notes

2.1 Pay attention to the following items to avoid the shortened life and failure of the ZNR

1) Circuit conditions
(1) Select a ZNR of which the maximum voltage including fluctuations in source voltage allows for the maximum permissible circuit voltage. (Refer to Table 1.)
(2) In cases that surges are intermittently applied at short intervals (for example, in the case that the voltage of the noise simulator test is impressed), do not cause them to exceed the ZNR's rated pulse power.
(3) Select a ZNR recommended in Table 1.
<1> Across the Line (Line to Line) use
If possible, use a part No. marked with * incase of voltage temporarily rises load unbalance of separately-wired loads, short between hot and neutral-line, open of neutral line in single-phase-three-wired system, and due to resonance at switching for a capacitive, inductive load.

Note / Revision

<2> Used between line to ground
Use a different Part No. from "Across-the-line use" as table 1, because of raising voltage in case of "Line to Ground Fault".
Use a part No. marked with ** in table 1, in case of the insulation resistance test (500VDC) for equipment.
When using a part of the varistor voltage that the insulation efficiency examination can not be cleared, there is a case where the surge absorber can be done by removing it from the circuit depending on the circuit condition (Refer examination of Japan Domestic Safety Regulations).

(4) Concerning current fuse

<1> We recommended to selecting a ZNR and the rated current of a current fuse as follows.
Finally, please be sure that there is no danger if the ZNR mounted on equipment breaks.

Series	E5	E7	E10
Standard Part Numbers	ERZE05+++	ERZE07+++	ERZE10+++
Fuse rated current	5A max.	7A max.	10A max.

∗ Fuses shall use rated voltages appropriate for circuits.

<2> The recommended fuse position is shown in table 1, "Example of ZNR application", however, if the load current of protected equipment is larger than that of the above recommended fuse rated current, install a current fuse at the position shown below.

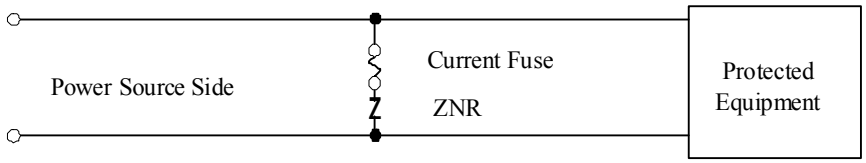

(5) Concerning thermal fuse
Set a thermal fuse to get high thermal conductivity with ZNR.

Note / Revision

Table 1 Example of ZNR application

Connection example

Measure against across-the-line surge

DC/AC single-phase

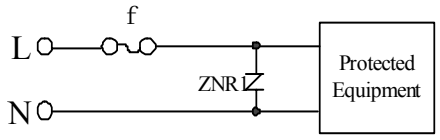

f : fuse

AC 3-phase

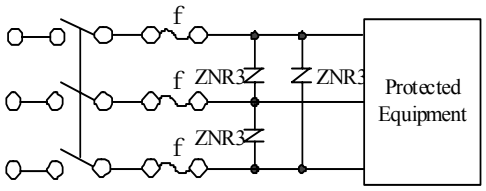

f : fuse

Measure against surge across the line and between the line and ground

DC/AC single-phase

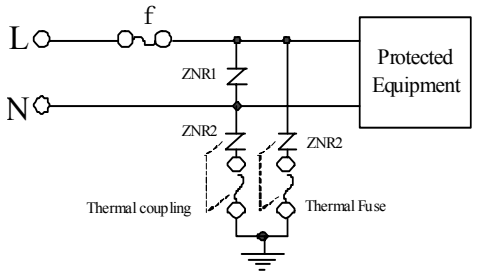

f : fuse

AC 3-phase

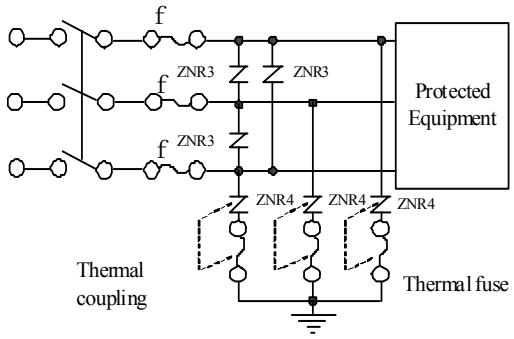

f : fuse

Example of rating selection

Across the Line (Line to Line) use

ZNR	Source voltage	Nominal varistor voltage
ZNR1 ZNR3	AC100V	201 to 361*
	AC120V	241 to 431*
	AC200V	471 to 621*
	AC220V	471 to 621*
	AC240V	511,621*
	AC380V	751,821*

Line to Ground use

ZNR	Source voltage	Nominal varistor voltage
ZNR2 ZNR4	AC100V～ AC220V	471 511 621* 821**
	AC230V～ AC240V	511 621* 821**
	AC380V	112**

Note / Revision

2) Operating environments

(1) The ZNR is designed to use indoors. Do not use it exposed outdoors.

(2) Do not use the ZNR in places exposed to temperatures beyond the operating temperature range, such as places exposed to sunlight and vicinities of heating equipment.

(3) Do not use the ZNR in places exposed to high temperatures and high humidity, such as places exposed directly to rain, wind, dew condensation, and vapor.

(4) Do not use the ZNR in dusty and salty places and atmospheres polluted by corrosive gases.

3) Processing conditions

(1) Do not wash the ZNR by such solvents (thinner, acetone, etc.) as its exterior resin deteriorates.

(2) Do not apply a strong vibration, shock (by falling, etc.) to the ZNR, cracking to its exterior resin and element may occur.

(3) When coating the ZNR with resin (including molding), do not use such resin.

(4) Do not bend the ZNR lead wires at the position close to its ZNR exterior resin, or apply external force to the position.

(5) When soldering the ZNR lead wires, follow the recommended condition and do not melt the solder and insulating materials constituting the ZNR.

	Soldering Method	Recommended Condition	Attention
Type D	Flow soldering	260deg.C, within 10sec.	Type D is not Reflow soldering object part.

*1 When using at the thing except the condition that it is possible to suggest to the above, confirm that there is not a problem.
The limit of the repair be once and go in solder temperature within 400deg.C and moreover within 5 seconds.

*2 Profile be careful because there is a margin of error in the way of measuring.

*3 The temperature depend on the size and the package density of the substrate.
Therefore, confirm every kind of the substrate.

● Soldering temperature-time profile to recommend

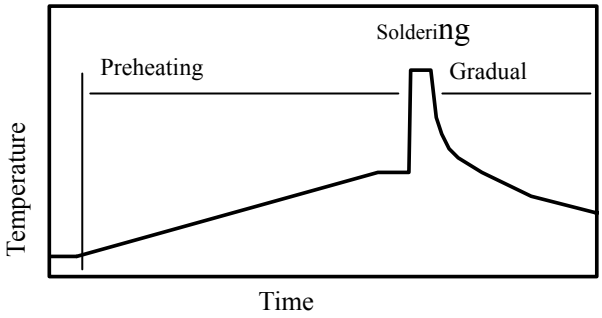

Preheating	The normal 130deg.C	max.120s
Soldering	max.260deg.C	max.10s
Gradual cooling	Gradual cooling	

Note / Revision

4) Long-term storage

(1) Do not store the ZNR under high temperatures and high humidity. Store it at temperature up to 40 degree-C and at humidity below 75%RH, and use it within two years.
Before using the ZNR that has been stored for a long period (two year or longer), confirm the Solderability.

(2) Avoid atmospheres full of corrosive gases (hydrogen sulfide, sulfurous acid, chlorine, ammonia, etc.).

(3) Avoid direct sunlight and dew condensation.

3. Notices

3.1 In cases that the ZNR is used in equipment (aerospace equipment, medical equipment, etc.) requiring extremely high reliability, ask us for selection of part No., and protection coordination, etc. in advance.

3.2 There is possibility that the ZNR will unexpectedly smoke or ignite because of abnormal rise of the circuit voltage and invasion of excessive surge. To prevent that accident from spreading over the equipment and not to expand the damage, use multiplex protection such as the adoption of frame-retardant materials for housing parts and structural parts.

3.3 Package marking includes the product number, quantity, and country of origin. As a rule, country of origin should be indicated in English.

4. Substances of this product

4.1 This product not been manufactured with any ozone depleting chemical controlled under the Montreal Protocol.

4.2 This product comply with RoHS(Restriction of the use of certain Hazardous Substance in electrical and electronic equipment) Directive(2002/95/EC).

4.3 All the materials used in this part are registered material under the Law Concerning the Examination and Regulation of Manufacture, etc. of Chemical Substance

Note / Revision

[REFERENCE]

1. Scope, Part Numbers, Construction

1.1 Scope
This specification applies to the ZNR Surge Absorbers(Taping Type).

1.2 Part Numbers

Explanation of Part Numbers

1	2	3	4	5	6	7	8	9	10	11	12
E	R	Z	E	0	7						
Product Code			Series							Design no.	

Series

E05	Series E5
E07	Series E7
E08	Series E8
E10	Series E10
E11	Series E11

Lead Configuration

symbol	Lead Configuration	Packaging
A	Straight Lead	Bulk
1) B	Crimped Lead	Bulk
2) E	Straight Lead	Taped
2) F	Crimped Lead	Taped

1) Cut Type
2) Series E5, E7, E8, E10, E11

Nominal Varistor Voltage

The first two digits are significant figures and the third one denotes the number of zeros following.

Note / Revision

1.3 Construction

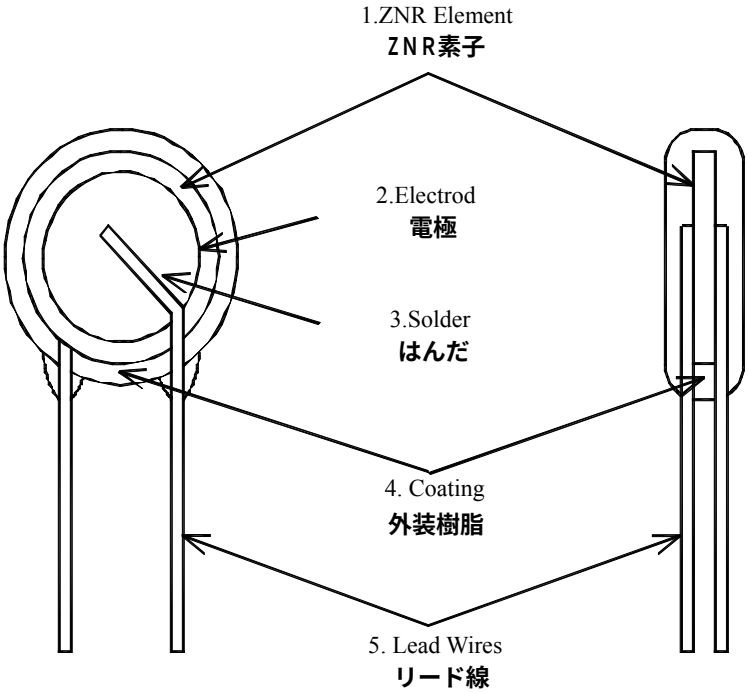

Item 部品名		Material 材質
1. ZNR Element ZNR素子		ZnO Ceramics etc. 酸化亜鉛 他
2. Electrode 電極		Silver 銀
3. Internal solder material 内部はんだ		Sn-Ag-Cu
4. Coating 外装樹脂		Epoxy Resin (UL94 V-0 Approved) エポキシ樹脂 (UL94 V-0 認定品)
5. Lead Wires リード線	Series : E5,E7 シリーズ : E5,E7	Tin(Sn100%) plated Copper-covered Steel 錫(Sn100%)メッキ銅覆鋼線
	Series : E8,E10,E11,E14 シリーズ : E8,E10,E11,E14	Tin(Sn100%) Plated Copper 錫(Sn100%)メッキ銅線

Note / Revision

2. Appearance, Dimensions

2.1 Appearance
Without dirt and crack, marking should be clear.
2.2 Dimensions
Refer to Figure 1.1 , 1.2 and table 1.1, 1.2.

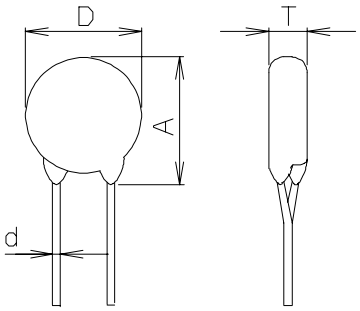

Fig. 1.1 Straight Leads and Taping
Part No. : ERZE**E□□□

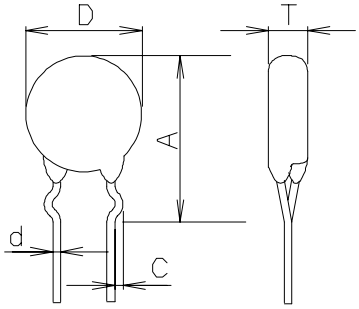

Fig. 1.2 Crimped Leads and Taping
Part No. : ERZE**F□□□

2.3 Taping Dimensions
Refer to Figure 1.3 , 1.4 and table 1.3, 1.4.

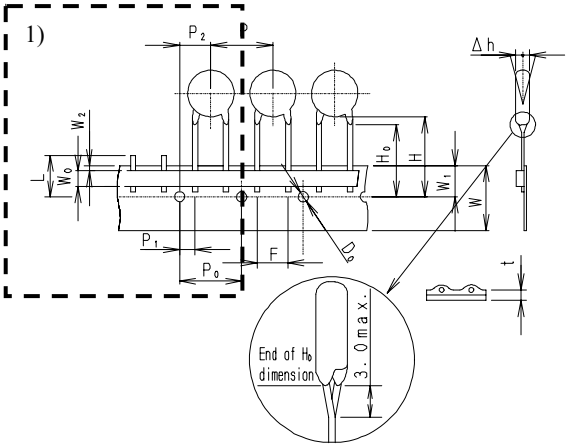

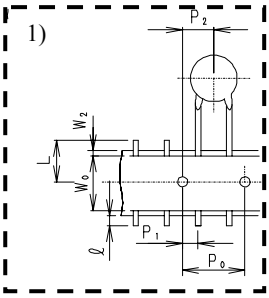

1)There are two types of W_0.

Fig. 1.3 Straight Leads and taping
Part No. : ERZE**E□□□

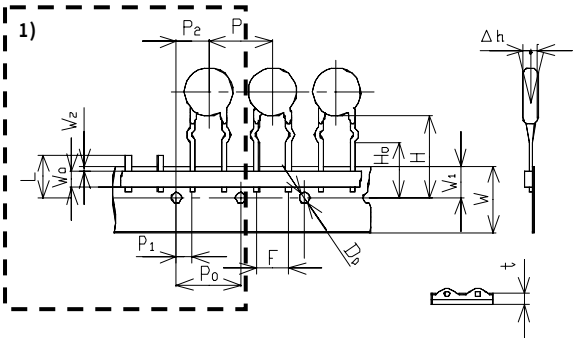

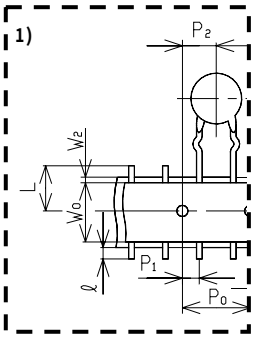

1)There are two types of W_0.

Fig. 1.4 Crimped Leads and Taping
Part No. : ERZE**F□□□

Note / Revision

3. Electrical Requirements

Listed below of Specifications, Test Specifications, and Test Methods.
Individual specifications is in the table 2 .

Characteristics		Specifications	Test Specifications	
3.1	Max. allowable voltage	AC：Table 2 DC：Table 2		
3.2	Rated wattage	Table 2		
3.3	Varistor voltage	V_1 ：Table 2	Measuring current :	1mA DC
3.4	Clamping voltage	Table 2	Measuring current :	Table 2
			Current Waveform :	8/20μs
3.5	Maximum peak current (Withstanding surge current)	1pulse：Table 2	Impulse :	8/20μs
		2pulse：Table 2	Impulse :	8/20μs at interval 5min
3.6	Maximum energy	Table 2	Impulse :	2ms, 1 pulse
		Table 2	Impulse :	10/1000μs, 1pulse
3.7	Temperature coefficientof varistor voltage	0 to -0.05%/deg.C	Measured voltage :	V_1
			Temp. range :	＋25deg.C to ＋85deg.C
3.8	Capacitance	Table 2	Measuring frequency :	1kHz 1MHz (below 100pF)
3.9	Dielectric loss	Table 2	Measuring frequency :	1kHz 1MHz (below 100pF)
3.10	Withstand voltage	No breakdown	Applied voltage :	Table 2
			Time :	1min

Note / Revision

Characteristics		Test Methods/Description
	Standard test condition	Environmental conditions under which every measuring is done without doubt on the measuring results. Unless specially, specified, temperature, relative humidity are 5deg.C to 35deg.C, 45 to 85%RH. respectively.
3.1	Maximum allowable voltage	The maximum Sine wave voltage (rms) that can be applied continuously or maximum DC voltage in the specified environmental temperature range.
3.2	Rated wattage	The maximum power to be loaded with in the specified environmental temperature
3.3	Varistor voltage	Voltage between both terminals of ZNR measured when CmA of DC current is applied under standard conditions. It is called Vc. Measuring the varistor voltage should be made promptly to avoid heat affection.
3.4	Clamping voltage	The maximum voltage between two terminals with the specified standard impulse current (8/20μs).
3.5	Maximum peak current (Withstanding surge current)	The maximum current within the varistor voltage change of ±10% with the standard impulse (8/20μs) applied by the specified condition.
3.6	Maximum energy	The maximum energy within the varistor voltage change of ±10% when the specified impulse is applied.
3.7	Temperature coefficient of varistor voltage	Coefficient indicating dependency of varistor voltage on specified temperature.
3.8	Capacitance	Capacitance shall be measured at 1kHz±10%、1Vrms max. (1MHz±10% below 100pF)、0V bias and 20±2deg.C.
3.9	Dielectric loss	Dielectric loss tangent shall be measured at 1kHz±10%、1Vrms max. (1MHz±10% below 100pF)、0V bias and 20±2deg.C.
3.10	Withstand voltage	The specified voltage shall be applied both terminals of the specimen connected together and metal foil closely wrapped round its body for 1 minute.
Note : Varistor Voltage change of forward direction shall be measured in the test of uni-pole surge life and DC load life.		

Note / Revision

4. Mechanical Requirements

Listed below of Specifications, Test Specifications, and Test Methods.

Characteristics		Specifications	Test Specifications
4.1	Robustness of terminations (Tensile)	No outstanding damage	Force : 9.8N(Series E5,E7,E8,E10,E11) 19.6N(Series E14) Time : 10 sec
4.2	Robustness of terminations (Bending)	No outstanding damage	Force : 4.9N(Series E5,E7,E8,E10,E11) 9.8N(Series E14)
4.3	Vibration	No outstanding damage	Frequency : 10 to 55Hz Amplitude : 0.75mm Time : each 2 hours
4.4	Solderability	Minimum 95% of the terminals should be covered with solder uniformly	Solder temp. : 235+/-5deg.C Immersed time : 2+/-0.5s
4.5	Resistance to soldering heat	ΔV1 ≦+/- 5%	Solder temp. : 260+/-5deg.C Immersed time : 10+/-1sec

Characteristics		Test Methods/Description
4.1	Robustness of terminations (Tensile)	After gradually applying the specified load and keeping the unit fixed for 10 sconds, the terminal shall be visually examined for any damage.
4.2	Robustness of terminations (Bending)	The unit shall be secured with its terminals kept vertical and the specified load is applied, gradually bent by 90° in one direction, back to the original position, then 90° in the opposite direction, and again back to the original position. The damage of the terminals is visually examined.
4.3	Vibration	After repeatedly applying a single harmonic vibration (amplitude ; 0.75mm ; double amplitude ; 1.5mm with 1 minute vibration frequency cycles(10Hz to 55Hz to 10Hz) to each of three perpendicular directions for 2 hours. The varistor shall then be visually examined.
4.4	Solderability	After dipping the terminals to a depth of about 3mm from the body, in the melted solder of 235+/-5deg.C for 2+/-0.5 seconds, the terminals are visually examined.
4.5	Resistance to Soldering Heat	After each lead shall be dipped into a solder bath having a temperature 260+/-5deg.C to a point 2.0～2.5mm from the body of the unit, be held there for specified time, and then be stored at room temperature and humidity for 1 to 2 hour. The change of Vc and mechanical damages are examined.
Note : Varistor Voltage change of forward direction shall be measured in the test of uni-pole surge life and DC load life.		

Note / Revision

5. Environmental Requirements

Listed below of Specifications, Test Specifications, and Test Methods.
Individual specifications is in the table 2 .

Characteristics		Specifications	Test Specifications
5.1	High temperature storage (Dry heat)	ΔV1 ≦ +/- 5%	Ambient temp. : 125+/-2deg.C Time : 1000h
5.2	Damp heat	ΔV1 ≦+/- 5%	Ambient condition : 40+/-2deg.C, .0 to 95%RH Time : 1000h
5.3	Low temperature storage (Cold)	ΔV1 ≦+/- 5%	Ambient temp. : -40+/-2deg.C Time : 1000 h
5.4	Heat cycle	ΔV1 ≦+/- 5% No outstanding damage	Step / Temp. / Period 1 / －40+/-3deg.C / 30min. 2 / Room Temp. / 15min. 3 / ＋125+/-2deg.C / 30min. 4 / Room Temp. / 15min. 5 cycles
5.5	High temperature load (Dry heat load)	ΔV1 ≦+/- 10%	Ambient temp. : 85+/-2deg.C Time : 1000 h
5.6	Damp heat load	ΔV1 ≦+/- 10%	Ambient condition : 40+/-2deg.C, 90 to 95%RH. Time : 1000 h
5.7	Impulse life I (Surge life I)	ΔV1 ≦+20% / -0% at listed table 2.	Impulse : 8/20μs Applied condition : 10^4 times by interval 10s
5.8	Impulse life II (Surge life II)	ΔV1 ≦+20% / -0% at listed table 2	Impulse : 8/20μs Applied condition : 10^5 times by interval 10s
Operating Temperature Range		-40deg.C to + 85deg.C	
Storage Temperature Range		-40deg.C to +125deg.C	

Note / Revision

Characteristics		Test Methods/Description
5.1	High temperature storage (Dry heat)	The specimen shall be subjected to 125+/-2deg.C for 1000 hours in a thermostatic bath without load and then stored at room temperature and humidity for 1 to 2 hours. Thereafter, the change of Vc shall be measured.
5.2	Damp heat	The specimen shall be subjected to 40+/-2deg.C, 90 to 95%RH for 1000 hours without load and then stored at room temperature and humidity for 1 to 2 hours. Thereafter, the change of Vc shall be measured.
5.3	Low temperature storage (Cold)	The specimen shall be subjected to －40+/-2deg.C without load for 1000 hours and then stored at room temperature for 1 to 2 hours. Thereafter, the change of Vc shall be measured.
5.4	Heat cycle	The temperature cycling shall be repeated 5 times and stored at room temperature and humidity for 1 to 2 hours. The change of Vc as well as mechanical damage shall be examined.
5.5	High temperature load (Dry heat load)	After being continuously applied the maximum allowable voltage at 85+/-2deg.C for 1000 hours, the specimen shall be stored at room temperature and humidity for 1 to 2 hours. Thereafter, the change of Vc shall be measured.
5.6	Damp heat load	The specimen shall be subjected to 40+/-2deg.C, 90 to 95%RH and the maximum allowable voltage for 1000 hours and then stored at room temperature and humidity for 1 to 2 hours. Thereafter, the change of Vc shall be measured.
5.7	Impulse life I (Surge life I)	After the specified impulse is applied 10000 times continuously with the interval 10 seconds at room temperature, the specimen shall be stored at room temperature and humidity for 1 to 2 hours. Thereafter, the change of Vc shall be measured.
5.8	Impulse life II (Surge life II)	After the specified impulse is applied 100000 times continuously with the interval 10 seconds at room temperature, the specimen shall be stored at room temperature and humidity for 1 to 2 hours. Thereafter, the change of Vc shall be measured.
Note : Varistor Voltage change of forward direction shall be measured in the test of uni-pole surge life and DC load life.		

Individual specifications of Dimensions and Electrical Requirements and Environmental Requirements are indicated below.

Dimensions : Table 1.1 to 1.4
Electrical Requirements : Table 2
Environmental Requirements : Table 2

Note / Revision

Table 1.1 Series E7 Straight Leads and Taping

品番 Part No.	付図番号 Fig. No.	D max. (mm)	A max. (mm)	T max. (mm)	C +/-0.4 (mm)	Φd +/- (mm)	1)Weight Approx. (g)
ERZE07E201	付図 1.1 Fig. 1.1	9.0	15.0	5.3	-	0.80 +0.08 -0.05	0.7
ERZE07E221				5.4			0.8
ERZE07E241				5.5			0.8
ERZE07E271				5.7			0.9
ERZE07E331				6.0			1.0
ERZE07E361				6.2			1.0
ERZE07E391				6.3			1.0
ERZE07E431				6.5			1.1
ERZE07E471				6.8			1.2
ERZE07E511				7.0			1.2
ERZE07E561				7.4			1.3
ERZE07E621				7.8			1.4

1)参考値, Typical

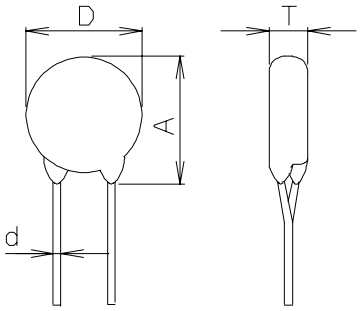

Fig. 1.1 Straight Leads and Taping
Part No.：ERZE**E□□□

Note / Revision

Table 1.5 Taping Dimensions Series E7 Straight Leads and Taping

品 番 Part No.	P	P_0	P_1	P_2	F	Δh	W	W_0	W_1	W_2	H	H_0 or F1	L	ℓ	D_0	t
	+/-	+/-	+/-	+/-	+/-	+/-	+/-	min.	+/-	max.	typical	+/-	max.	max.	+/-	+/-
	(mm)	(mm)	(mm)	(mm)	(mm)	(mm)	(mm)	(mm)	(mm)	(mm)	(mm)	(mm)	(mm)	(mm)	(mm)	(mm)
ERZE07E201	15.0 +1.0 -1.0	15.0 +0.3 -0.3	3.75 +0.70 -0.70	7.5 +1.3 -1.3	7.5 +0.5 -0.5	0 +2 -2	18.0 +1.0 -0.5	5.0	9.0 +0.5 -0.5	3.0	Approx. 22	H_0: 18.0 +2.0 -0.0	11.0	5.0 or 1.0	φ4.0 +0.2 -0.2	0.6 +0.3 -0.3
ERZE07E221																
ERZE07E241																
ERZE07E271																
ERZE07E331																
ERZE07E361	15.0 +1.0 -1.0	15.0 +0.3 -0.3	3.75 +0.70 -0.70	7.5 +1.3 -1.3	7.5 +0.5 -0.5	0 +2 -2	18.0 +1.0 -0.5	5.0	9.0 +0.5 -0.5	3.0	Approx. 22	F_1: 16.00 +0.75 -0.50	11.0	5.0 or 1.0	φ4.0 +0.2 -0.2	0.6 +0.3 -0.3
ERZE07E391																
ERZE07E431																
ERZE07E471																
ERZE07E511																
ERZE07E561																
ERZE07E621																

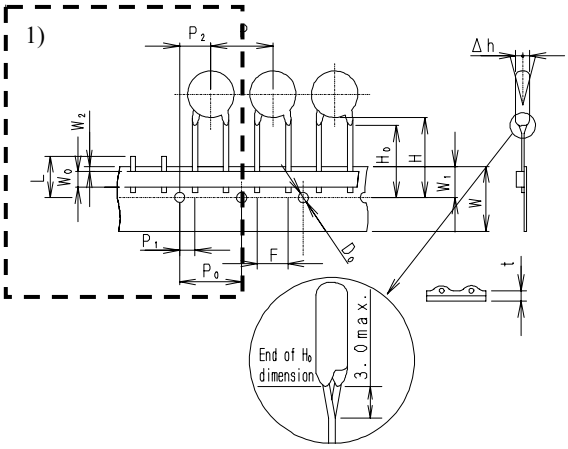

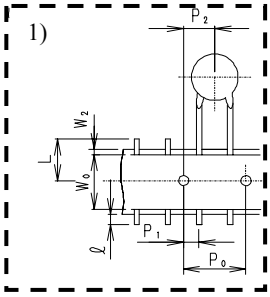

[1)]There are two types of W_0.

Fig. 1.3 Straight Leads and taping

Note / Revision

Table 1.2 Series E7 Crimped Leads and Taping

品番 Part No.	付図番号 Fig. No.	D max. (mm)	A max. (mm)	T max. (mm)	C +/-0.4 (mm)	Φd +/- (mm)	1)Weight Approx. (g)
ERZE07F201	付図 1.2 Fig. 1.2	9.0	17.0	5.3	1.4	0.80 +0.08 -0.05	0.7
ERZE07F221				5.4			0.8
ERZE07F241				5.5			0.8
ERZE07F271				5.7			0.9
ERZE07F331				6.0			1.0
ERZE07F361				6.2			1.0
ERZE07F391				6.3			1.0
ERZE07F431				6.5			1.1
ERZE07F471				6.8			1.2
ERZE07F511				7.0			1.2
ERZE07F561				7.4			1.3
ERZE07F621				7.8			1.4

1)参考値, Typical

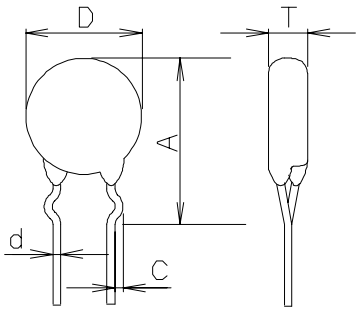

Fig. 1.2 Crimped Leads and Taping
Part No. : ERZE**F□□□

Note / Revision

Table 1.6 Taping Dimensions Series E7 Crimped Leads and Taping.

品 番 Part No.	P	P_0	P_1	P_2	F	Δh	W	W_0	W_1	W_2	H	H_0 or F1	L	ℓ	D_0	t
	+/-	+/-	+/-	+/-	+/-	+/-	+/-	min.	+/-	max.	typical	+/-	max.	max.	+/-	+/-
	(mm)	(mm)	(mm)	(mm)	(mm)	(mm)	(mm)	(mm)	(mm)	(mm)	(mm)	(mm)	(mm)	(mm)	(mm)	(mm)
ERZE07F201	15.0 +1.0 -1.0	15.0 +0.3 -0.3	3.75 +0.70 -0.70	7.5 +1.3 -1.3	7.5 +0.5 -0.5	0 +2 -2	18.0 +1.0 -0.5	5.0	9.0 +0.5 -0.5	3.0	Approx. 22	H_0: 16.0 +0.5 -0.5	11.0	5.0 or 1.0	φ4.0 +0.2 -0.2	0.6 +0.3 -0.3
ERZE07F221																
ERZE07F241																
ERZE07F271																
ERZE07F331																
ERZE07F361																
ERZE07F391																
ERZE07F431																
ERZE07F471																
ERZE07F511																
ERZE07F561																
ERZE07F621																

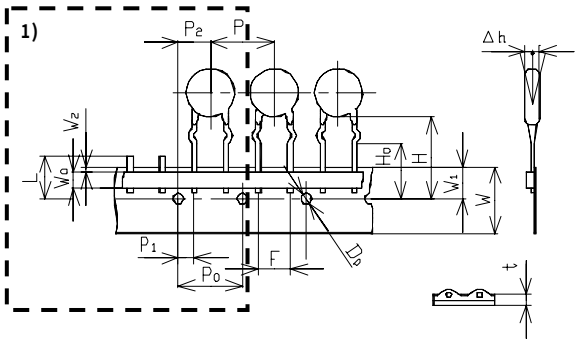

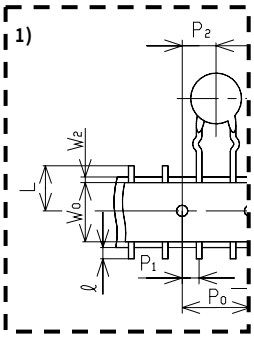

1) There are two types of W_0.

Fig. 1.4 Crimped Leads and Taping

Note / Revision

Table 2 Series E7

Part Numbers symbol : * is E or F

Part Number	Applicable Standards		Electrical														Environmental	
	Nominal Part No.	1)Authorized Standard	Maximum Allowable Voltage		Rated watt-age	Varistor Voltage	Clamping Voltage		Maximum Peak Curent		Maximum Energy		Capaci-tance	Di-electric Loss	With-stand voltage		Impulse Life (Surge Life)	
			ACrms	DC			(max.)		1 time	2 times	2ms	10/1000 μs	(max.)	(max.)	(max.)		I	II
			(V)	(V)	(W)	(V)	VxA(V)	xA	(A)	(A)	(J)	(J)	1kHz (pF)	1kHz (%)	(V)		(A)	(A)
ERZE07*201	E7201	○☆	130	170	0.25	185 to 225	340	25	2500	1250	19	26	430	10	1500		100	70
ERZE07*221	E7221	○☆	140	180	0.25	198 to 242	360	25	2500	1250	22	30	410	10	1500		100	70
ERZE07*241	E7241	○☆	150	200	0.25	216 to 264	395	25	2500	1250	24	33	380	10	1500		100	70
ERZE07*271	E7271	○☆	175	225	0.25	247 to 303	455	25	2500	1250	28	39	350	10	1500		100	70
ERZE07*331	E7331	○☆	210	270	0.25	297 to 363	545	25	2500	1250	32	44	300	10	1500		100	70
ERZE07*361	E7361	○☆	230	300	0.25	324 to 396	595	25	2500	1250	36	50	300	10	1500		100	70
ERZE07*391	E7391	○☆	250	320	0.25	351 to 429	650	25	2500	1250	38	53	300	10	1500		100	70
ERZE07*431	E7431	○☆	275	350	0.25	387 to 473	710	25	2500	1250	43	60	270	10	1500		100	70
ERZE07*471	E7471	○☆	300	385	0.25	423 to 517	775	25	2500	1250	47	65	230	10	1500		100	70
ERZE07*511	E7511	○☆	320	410	0.25	459 to 561	845	25	2500	1250	50	70	210	10	1500		100	70
ERZE07*561	E7561	○☆	350	450	0.25	504 to 616	930	25	2500	1250	55	75	200	10	1500		100	70
ERZE07*621	E7621	○☆	385	505	0.25	558 to 682	1025	25	2500	1250	60	80	190	10	1500		100	70

1) Authorized Standard

○:UL1449 Ed.3, ●:UL1449 Ed.3 Type3(or Code-Connected and Direct plug-in) , ◎:UL1449 Ed.3 Type2(or Permanently Connected)

☆:VDE(IEC61051-1, -2, -2-2), ★:VDE(IEC60950-1 Ed.2 Annex.Q)

※Approval number (File No.) of safety regulations are subject to revision without notice. Ask factory for a copy of the latest file No..

Note / Revision

6. Marking Contents

Refer to table 3.
Applicable Part No.：ERZE07E□□□,ERZE07F□□□
Table 3

Part Number 品番	Marking Contents 表示の内容
ERZE07E(F)201 to ERZE07E(F)621	ZNR E7□□□ ○◆◇

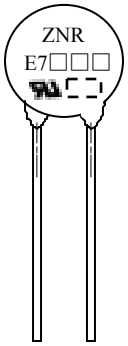

部品表示の一例
Example

Explanation of the content 内容の説明	
ZNR	Product Name 品名
E7□□□	Registered Part No.(VDE) Type Designation(UL), 登録品番 □□□･･･ Nominal Varistor Voltage 公称バリスタ電圧略称
	UL Recognized Component Mark UL 認定マーク
○	Factory Identification Marking 工場識別コード None 表記なし ･･･Japan 日本国 Q ･･･Indonesia インドネシア
◆	Year Code(example) 年コード(例)

2010	0	2020	K	2030	0
2011	1	2021	A	2031	1
⋮	⋮	⋮	⋮	⋮	⋮
2018	8	2028	H	2038	8
2019	9	2029	J	2039	9

・ When the tens digit of Christian era is even number, an alphabetic character (1:A, 2:B...9:J, 0:K, I is excluded.) shall be used for the abbreviation of end of Christian era.
・西暦年の＋の位が偶数年は末尾略称に英字(1:A,2:B…9:J,0:K, I を除く)を使用する。
・ When the tens digit of Christian era is odd number, a numeric character (End of Christian era) shall be used for the abbreviation of end of Christian era.
・西暦年の＋の位が奇数年は末尾略称に数字(西暦末尾)を使用する。

◇ Monthly Code
月コード

Jan.	1	Jul.	7
Feb.	2	Aug.	8
Mar.	3	Sep.	9
Apr.	4	Oct.	O
May.	5	Nov.	N
Jun.	6	Dec.	D

Note / Revision

7. Packing

7.1	Packing quantity	Table 4
7.2	Packing dimensions Marking of box packing	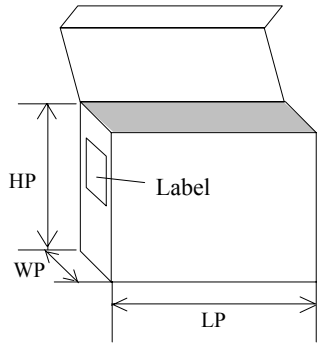 LP: 340 mm max. WP: 55 mm max. HP: 330 mm max. Material: Corrugated cardboard with thickness of 3.0mm Following shall be marked on packing box. 1. Part number 2. Quantity 3. Lot number
7.3	Packing method	Taped components shall be packed in ammunition packing boxes as shown below. Empty space ceiling part of boxes may be filled with packing material. 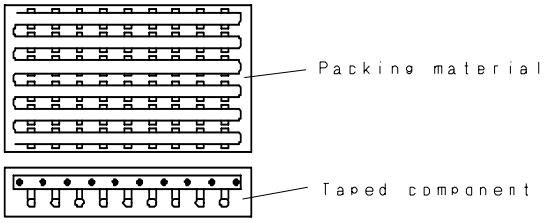
7.4	Taping conjunction	a) Carrier tape 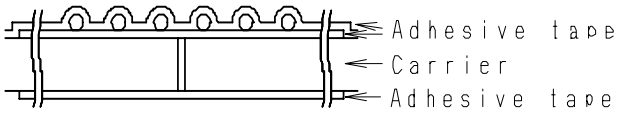 b) Adhesive tape 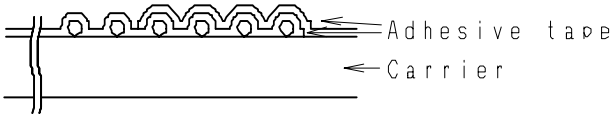 c) Both tapes 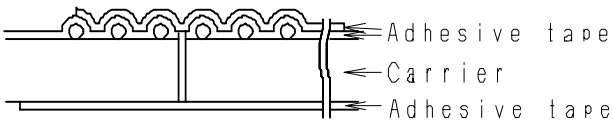
7.5	Tape material	Kraft paper , Adhesive tape

Note / Revision

Table 4 Series E7 Part Numbers symbol : * is E or F.

Part Numbers	Quantity in Packing Unit pcs	Packing Quantity in Carton pcs.
ERZE07*201 to ERZE07*471	1,000	10,000
ERZE07*511 to ERZE07*621	500	5,000

Note / Revision

7.6 Packing Indication Contents of Label

7.6.1 Bar Code Label Specification

Bar code symbology	:EIAJ Code39
Label size	:90.0 mm x 45.0 mm
Bar code height	:5 mm
Bar code dimension	
Wide element width	:0.334 mm
Narrow/Wide bar ratio	:1:2
Inter character gap	:0.167 mm
Quiet zone	:3.81 mm
Bar code resolution	:11.70 character/inch

7.6.2 Bar Code Contents

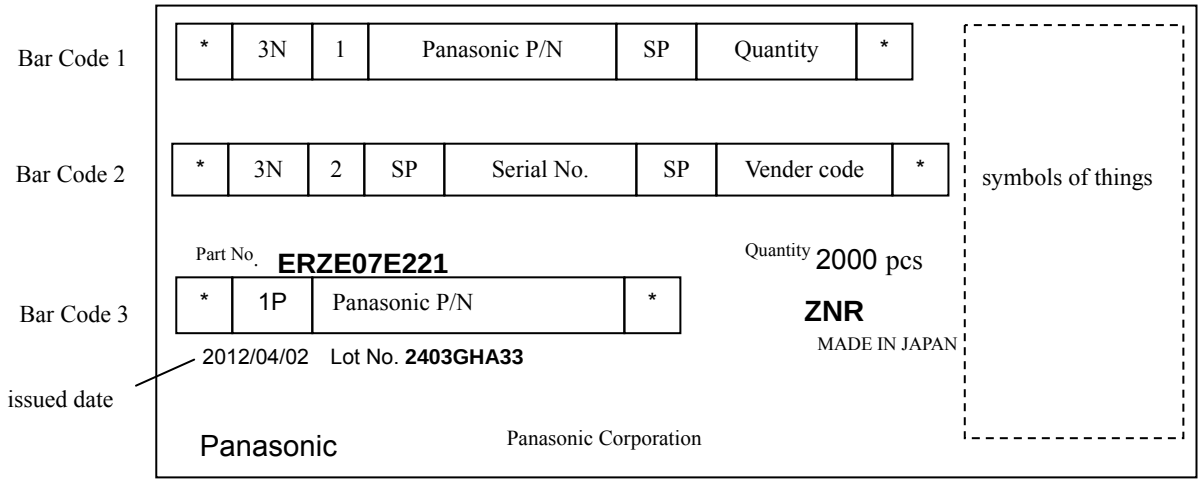

7.6.3 Constitution of Lot No.

2 4 02 GH A67
Year(Last digit) Month(1,2,…..9,O,N,D) day Fix Consecutive No(ex. A01,A02,…,A99,B01,…)

7.6.4 Label Form and Examples (ERZE07E221)

Note / Revision

8. Country of origin

8.1 Country of origin	Japan	Indonesia
8.2 Factory name	Panasonic Corporation	PT. Panasonic Industrial Devices Batam
8.3 Address	1037-2 Kamiosatsu, Chitose City, Hokkaido 066-8502 Japan	Puri Industrial Park 2000, Batam Centre, Kelurahan Baloi Permai Batam
8.4 Factory Identification Method	Factory Identification Marking : None	Factory Identification Marking : Q

Note / Revision

OCEAN CHIPS
Океан Электроники
Поставка электронных компонентов

Компания «Океан Электроники» предлагает заключение долгосрочных отношений при поставках импортных электронных компонентов на взаимовыгодных условиях!

Наши преимущества:

- Поставка оригинальных импортных электронных компонентов напрямую с производств Америки, Европы и Азии, а так же с крупнейших складов мира;
- Широкая линейка поставок активных и пассивных импортных электронных компонентов (более 30 млн. наименований);
- Поставка сложных, дефицитных, либо снятых с производства позиций;
- Оперативные сроки поставки под заказ (от 5 рабочих дней);
- Экспресс доставка в любую точку России;
- Помощь Конструкторского Отдела и консультации квалифицированных инженеров;
- Техническая поддержка проекта, помощь в подборе аналогов, поставка прототипов;
- Поставка электронных компонентов под контролем ВП;
- Система менеджмента качества сертифицирована по Международному стандарту ISO 9001;
- При необходимости вся продукция военного и аэрокосмического назначения проходит испытания и сертификацию в лаборатории (по согласованию с заказчиком);
- Поставка специализированных компонентов военного и аэрокосмического уровня качества (Xilinx, Altera, Analog Devices, Intersil, Interpoint, Microsemi, Actel, Aeroflex, Peregrine, VPT, Syfer, Eurofarad, Texas Instruments, MS Kennedy, Miteq, Cobham, E2V, MA-COM, Hittite, Mini-Circuits, General Dynamics и др.);

Компания «Океан Электроники» является официальным дистрибьютором и эксклюзивным представителем в России одного из крупнейших производителей разъемов военного и аэрокосмического назначения **«JONHON»**, а так же официальным дистрибьютором и эксклюзивным представителем в России производителя высокотехнологичных и надежных решений для передачи СВЧ сигналов **«FORSTAR»**.

AVIC JONHON

«JONHON» (основан в 1970 г.)

Разъемы специального, военного и аэрокосмического назначения:

(Применяются в военной, авиационной, аэрокосмической, морской, железнодорожной, горно- и нефтедобывающей отраслях промышленности)

«FORSTAR» (основан в 1998 г.)

ВЧ соединители, коаксиальные кабели, кабельные сборки и микроволновые компоненты:

(Применяются в телекоммуникациях гражданского и специального назначения, в средствах связи, РЛС, а так же военной, авиационной и аэрокосмической отраслях промышленности).

FORSTAR®

Телефон: 8 (812) 309-75-97 (многоканальный)
Факс: 8 (812) 320-03-32
Электронная почта: ocean@oceanchips.ru
Web: http://oceanchips.ru/
Адрес: 198099, г. Санкт-Петербург, ул. Калинина, д. 2, корп. 4, лит. А