WCMA1008U1X

128K x 8 Static RAM

Features

- **High Speed**
  - **55ns and 70ns availability**
- **Voltage range**
  - **2.7V–3.6V**
- **Ultra low active power**
  - **Typical active current: 20 mA @ f = f_{max} (70ns speed)**
- **Low standby power**
- **Easy memory expansion with $\overline{CE}$ and $\overline{OE}$ features**
- **Automatic power-down when deselected**
- **CMOS for optimum speed/power**

Functional Description

The WCMA1008U1X is a high-performance CMOS static RAM organized as 128K words by 8 bits. Easy memory expansion is provided by an active LOW Chip Enable ($\overline{CE_1}$), an active HIGH Chip Enable (CE_2), an active LOW Output Enable ($\overline{OE}$) and three-state drivers. These devices have an automatic power-down feature, reducing the power consumption by over 99% when deselected.

Writing to the device is accomplished by taking Chip Enable one ($\overline{CE_1}$) and Write Enable ($\overline{WE}$) inputs LOW and the Chip Enable two (CE_2) input HIGH. Data on the eight I/O pins (I/O_0 through I/O_7) is then written into the location specified on the address pins (A_0 through A_{16}).

Reading from the device is accomplished by taking Chip Enable one ($\overline{CE_1}$) and Output Enable ($\overline{OE}$) LOW while forcing Write Enable ($\overline{WE}$) and Chip Enable two (CE_2) HIGH. Under these conditions, the contents of the memory location specified by the address pins will appear on the I/O pins.

The eight input/output pins (I/O_0 through I/O_7) are placed in a high-impedance state when the device is deselected ($\overline{CE_1}$ HIGH or CE_2 LOW), the outputs are disabled ($\overline{OE}$ HIGH), or during a write operation ($\overline{CE_1}$ LOW, CE_2 HIGH, and $\overline{WE}$ LOW).

The WCMA1008U1X is available in a 32 Lead TSOP and STSOP packages.

Logic Block Diagram

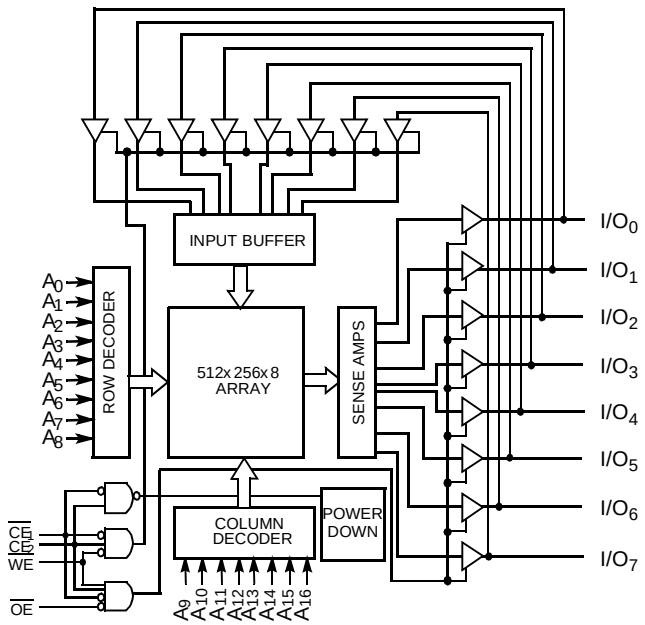

Pin Configurations

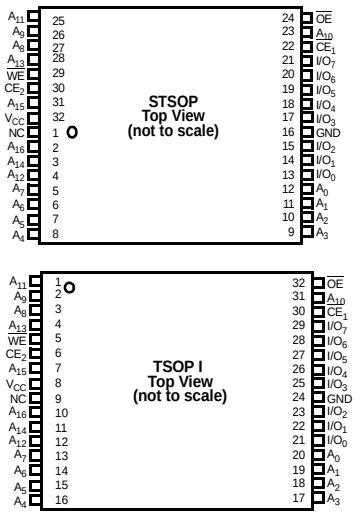

Maximum Ratings

(Above which the useful life may be impaired. For user guidelines, not tested.)

Storage Temperature .....–65°C to +150°C

Ambient Temperature with Power Applied.....55°C to +125°C

Supply Voltage to Ground Potential..... .....–0.5V to +4.6V

DC Voltage Applied to Outputs in High Z State[1].....0.5V to V_{CC} + 0.5V

DC Input Voltage[1].....–0.5V to V_{CC} + 0.5V

Output Current into Outputs (LOW).....20 mA

Static Discharge Voltage .....>2001V (per MIL-STD-883, Method 3015)

Latch-Up Current .....>200 mA

Operating Range

Product	Range	Ambient Temperature	V_{CC}
WCMA1008U1X	Industrial	–40°C to +85°C	2.7V to 3.6V

Product Portfolio

Product	V_{CC} Range			Speed	Power Dissipation (Industrial)			
					Operating, I_{CC}		Standby (I_{SB2})	
					f = f_{max}		Typ.[2]	Max.
	Min.	Typ.[2]	Max.		Typ.[2]	Max.		
WCMA1008U1X	2.7V	3.0V	3.6V	70 ns	20 mA	40 mA	0.4 µA	30 µA
				55 ns				

Notes:

1. $V_{IL(min.)}$ = –2.0V for pulse durations less than 20 ns.
2. Typical values are included for reference only and are not guaranteed or tested. Typical values are measured at V_{CC} = $V_{CC(typ.)}$, T_A = 25°C.

Electrical Characteristics Over the Operating Range

Parameter	Description	Test Conditions			WCMA1008U1X-70/55 Min.	Typ.[2]	Max.	Unit
V_{OH}	Output HIGH Voltage	I_{OH} = –1.0 mA	V_{CC} = 2.7V		2.4			V
V_{OL}	Output LOW Voltage	I_{OL} = 2.1 mA	V_{CC} = 2.7V				0.4	V
V_{IH}	Input HIGH Voltage				2		V_{CC} + 0.5V	V
V_{IL}	Input LOW Voltage				–0.5		0.8	V
I_{IX}	Input Leakage Current	GND ≤ V_I ≤ V_{CC}			–1		+1	µA
I_{OZ}	Output Leakage Current	GND ≤ V_O ≤ V_{CC}, Output Disabled			–1		+1	µA
I_{CC}	V_{CC} Operating Supply Current	f = f_{MAX} = 1/t_{RC}	V_{CC} = 3.6V I_{OUT} = 0 mA CMOS Levels	70ns		20	40	mA
				55ns		23	50	
I_{SB1}	Automatic CE Power-Down Current— TTL Inputs	Max. V_{CC}, $\overline{CE}_1$≥V_{IH}, CE_2<V_{IH} V_{IN} ≥ V_{IH} or V_{IN} ≤ V_{IL}, f = f_{MAX}		70ns		15	300	µA
				55ns		17	350	
I_{SB2}	Automatic CE Power-Down Current— CMOS Inputs	Max. V_{CC}, $\overline{CE}_1$ ≥ V_{CC} – 0.3V,CE_2 <0.3 V_{IN} ≥ V_{CC} – 0.3V or V_{IN} ≤ 0.3V, f = 0				0.4	30	

Capacitance[3]

Parameter	Description	Test Conditions	Max.	Unit
C_{IN}	Input Capacitance	T_A = 25°C, f = 1 MHz, V_{CC} = $Vcc_{(typ)}$	6	pF
C_{OUT}	Output Capacitance		8	pF

Thermal Resistance

Description	Test Conditions	Symbol	BGA	Unit
Thermal Resistance[3] (Junction to Ambient)	Still Air, soldered on a 4.25 x 1.125 inch, 4-layer printed circuit board	Θ_{JA}	55	°C/W
Thermal Resistance[3] (Junction to Case)		Θ_{JC}	16	°C/W

Note:

3. Tested initially and after any design or process changes that may affect these parameters.

AC Test Loads and Waveforms

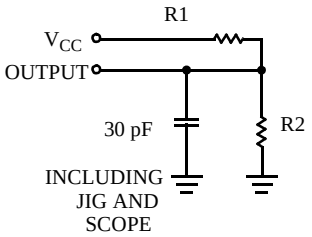

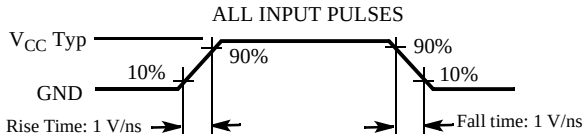

Equivalent to: THÉVENIN EQUIVALENT

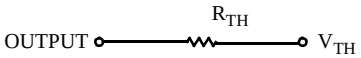

Parameters	3.3V	Unit
R1	1213	Ohms
R2	1378	Ohms
R_{TH}	645	Ohms
V_{TH}	1.75	Volts

Data Retention Characteristics (Over the Operating Range)

Parameter	Description	Conditions	Min.	Typ.[2]	Max.	Unit
V_{DR}	V_{CC} for Data Retention		1.6			V
I_{CCDR}	Data Retention Current	$V_{CC} = 2V$, $\overline{CE_1} \geq V_{CC} - 0.3V$, $CE_2 < 0.3V$ $V_{IN} \geq V_{CC} - 0.3V$ or $V_{IN} \leq 0.3V$		0.4	20	µA
t_{CDR}[3]	Chip Deselect to Data Retention Time		0			ns
t_R[4]	Operation Recovery Time		t_{RC}			ns

Data Retention Waveform

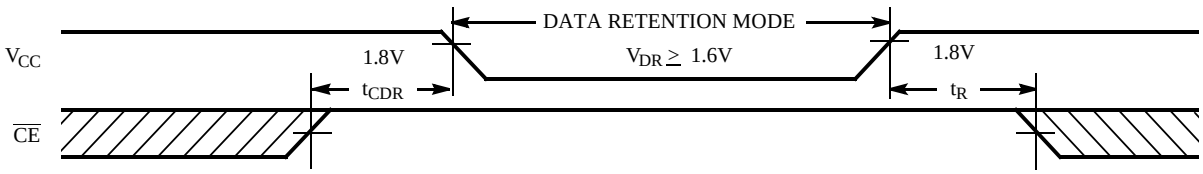

Note:

4. Full Device AC operation requires linear V_{CC} ramp from V_{DR} to $V_{CC(min.)} \geq 100$ µs or stable at $V_{CC(min.)} \geq 100$ µs.

Switching Characteristics Over the Operating Range[5]

Parameter	Description	WCMA1008U1X-55		WCMA1008U1X-70		Unit
		Min.	Max.	Min.	Max.	
READ CYCLE						
t_{RC}	Read Cycle Time	55		70		ns
t_{AA}	Address to Data Valid		55		70	ns
t_{OHA}	Data Hold from Address Change	5		10		ns
t_{ACE}	$\overline{CE}_1$ LOW and CE_2 HIGH to Data Valid		55		70	ns
t_{DOE}	$\overline{OE}$ LOW to Data Valid		20		35	ns
t_{LZOE}	$\overline{OE}$ LOW to Low Z[6]	10		10		ns
t_{HZOE}	$\overline{OE}$ HIGH to High Z[6, 7]		20		25	ns
t_{LZCE}	$\overline{CE}_1$ LOW and CE_2 HIGH to Low Z[6]	10		10		ns
t_{HZCE}	$\overline{CE}_1$ HIGH or CE_2 LOW to High Z[6, 7]		20		25	ns
t_{PU}	$\overline{CE}_1$ LOW and CE_2 HIGH to Power-Up	0		0		ns
t_{PD}	$\overline{CE}_1$ HIGH or CE_2 LOW to Power-Down		55		70	ns
WRITE CYCLE[8,]						
t_{WC}	Write Cycle Time	55		70		ns
t_{SCE}	$\overline{CE}_1$ LOW and CE_2 HIGH to Write End	45		60		ns
t_{AW}	Address Set-Up to Write End	45		60		ns
t_{HA}	Address Hold from Write End	0		0		ns
t_{SA}	Address Set-Up to Write Start	0		0		ns
t_{PWE}	$\overline{WE}$ Pulse Width	45		55		ns
t_{SD}	Data Set-Up to Write End	25		30		ns
t_{HD}	Data Hold from Write End	0		0		ns
t_{HZWE}	$\overline{WE}$ LOW to High Z[6, 7]		20		25	ns
t_{LZWE}	$\overline{WE}$ HIGH to Low Z[6]	5		5		ns

Notes:

5. Test conditions assume signal transition time of 5 ns or less, timing reference levels of $V_{CC(typ.)}/2$, input pulse levels of 0 to $V_{CC(typ.)}$, and output loading of the specified I_{OL}/I_{OH} and 30 pF load capacitance.
6. At any given temperature and voltage condition, t_{HZCE} is less than t_{LZCE}, t_{HZOE} is less than t_{LZOE}, and t_{HZWE} is less than t_{LZWE} for any given device.
7. t_{HZOE}, t_{HZCE}, and t_{HZWE} transitions are measured when the outputs enter a high impedance state.
8. The internal write time of the memory is defined by the overlap of $\overline{WE}$, $\overline{CE}_1 = V_{IL}$ and $CE_2 = V_{IH}$. All signals must be ACTIVE to initiate a write and any of these signals can terminate a write by going INACTIVE. The data input set-up and hold timing should be referenced to the edge of the signal that terminates the write.

Switching Waveforms

Read Cycle No. 1 (Address Transition Controlled) [9, 10]

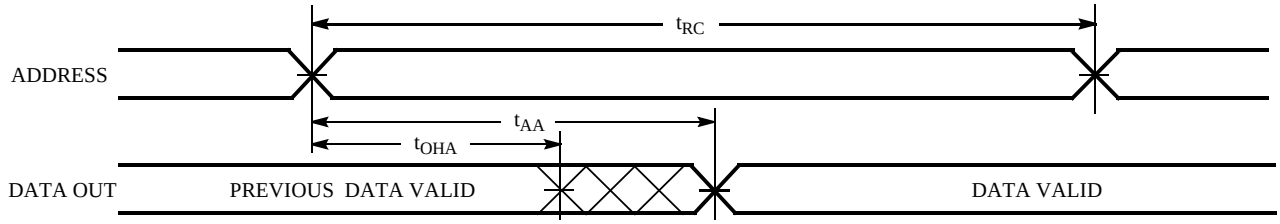

Read Cycle No. 2 ($\overline{OE}$ Controlled)[10, 11]

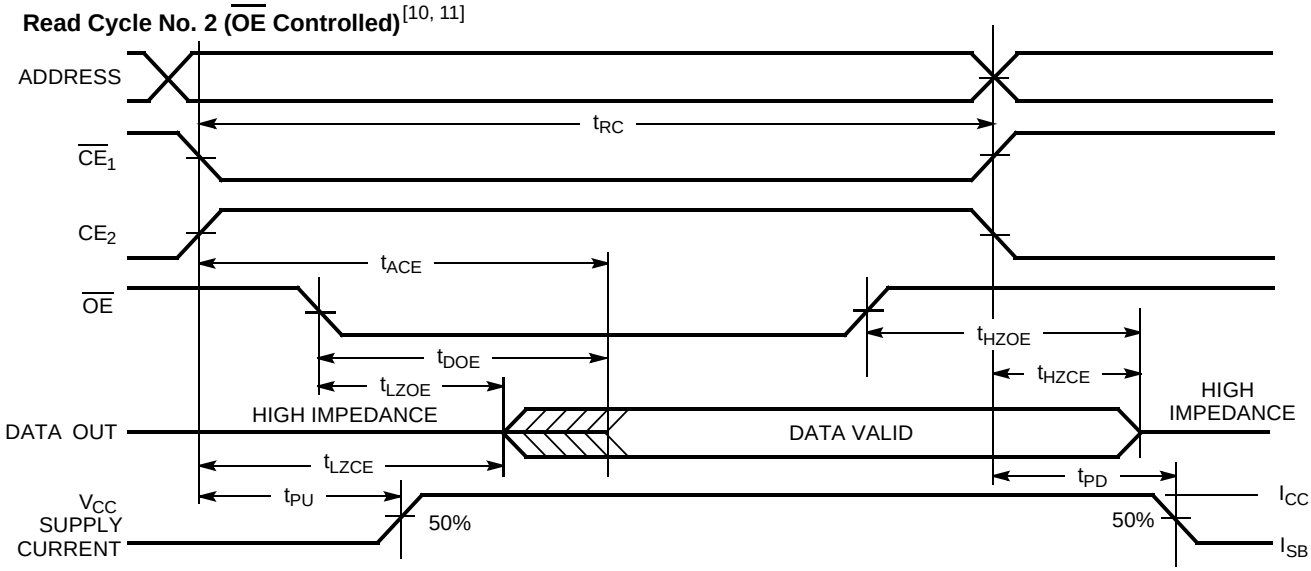

Notes:

9. Device is continuously selected. $\overline{OE}$, $\overline{CE_1} = V_{IL}$, $CE_2 = V_{IH}$.
10. $\overline{WE}$ is HIGH for read cycle.
11. Address valid prior to or coincident with $\overline{CE_1}$ transition LOW and CE_2 transition HIGH.

Switching Waveforms (continued)

Write Cycle No. 1($\overline{WE}$ Controlled) [8, 12, 14]

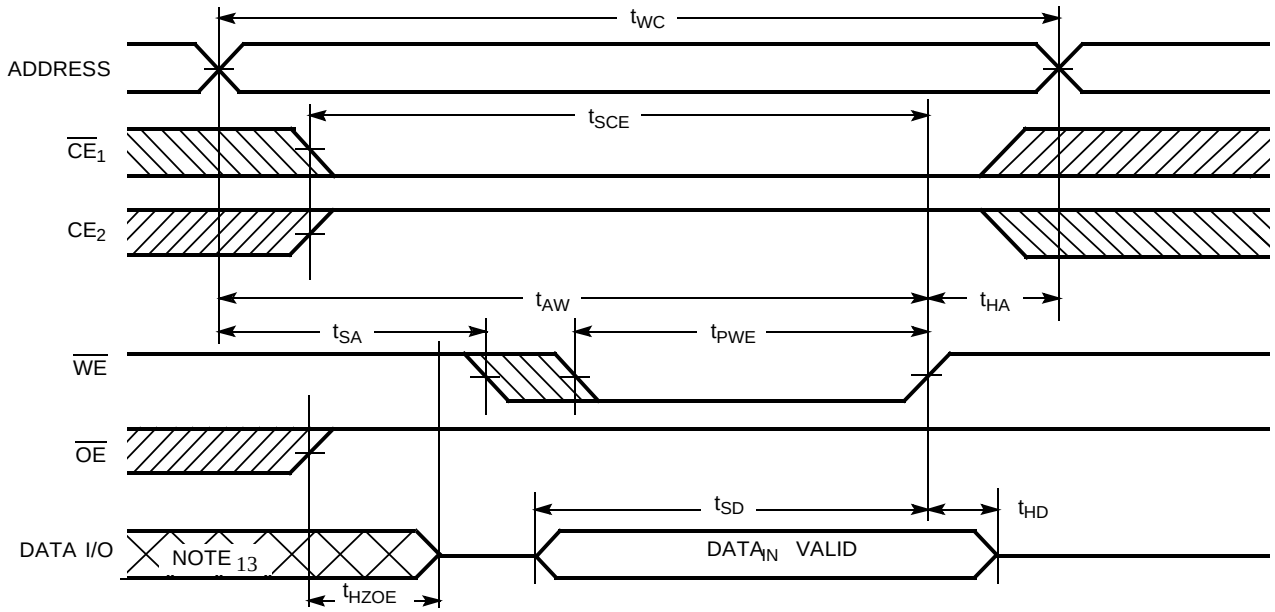

Write Cycle No. 2 ($\overline{CE_1}$ or CE_2 Controlled) [8, 12, 14]

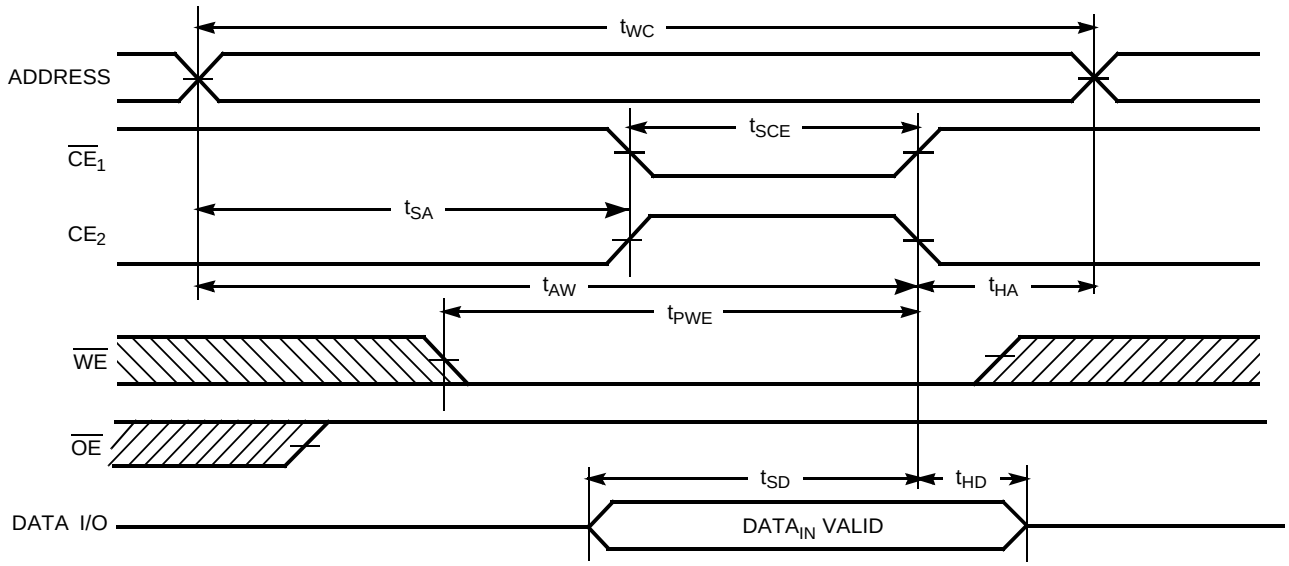

Notes:

12. Data I/O is high impedance if $\overline{OE} = V_{IH}$.
13. During this period, the I/Os are in output state and input signals should not be applied.
14. If CE_1 goes HIGH and CE_2 goes LOW simultaneously with WE HIGH, the output remains in a high-impedance state.

Switching Waveforms (continued)

Write Cycle No. 3 ($\overline{WE}$ Controlled, $\overline{OE}$ LOW) [14]

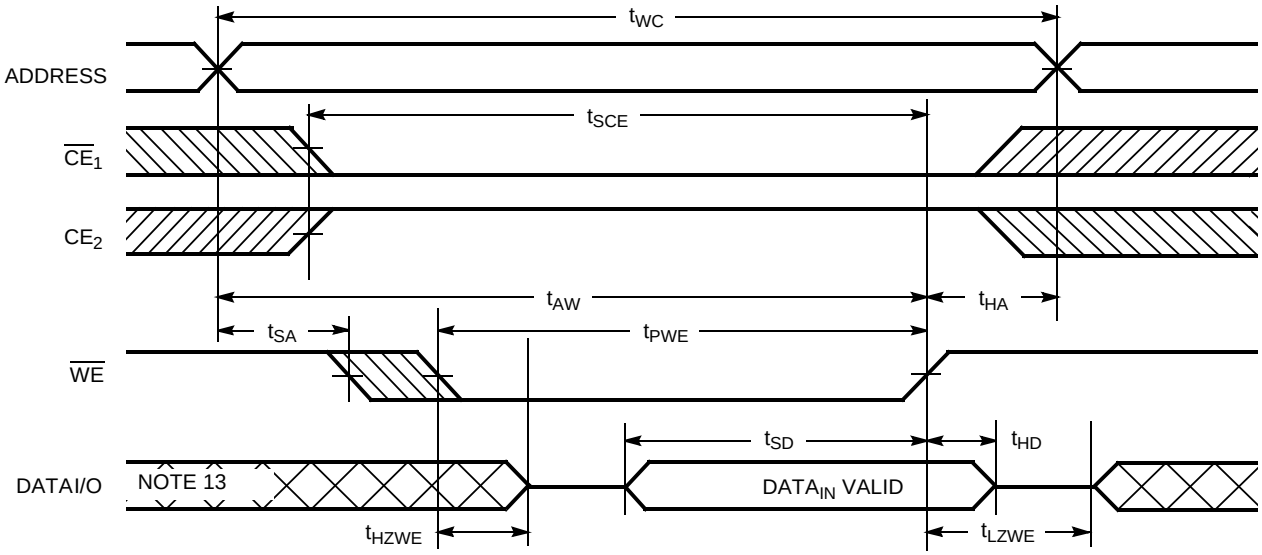

Truth Table

$\overline{CE_1}$	CE_2	$\overline{WE}$	$\overline{OE}$	Inputs/Outputs	Mode	Power
H	X	X	X	High Z	Deselect/Power-Down	Standby (I_{SB})
X	L	X	X	High Z	Deselect/Power-Down	Standby (I_{SB})
L	H	H	L	Data Out	Read	Active (I_{CC})
L	H	L	X	Data In	Write	Active (I_{CC})
L	H	H	H	High Z	Output Disabled	Active (I_{CC})

Ordering Information

Speed (ns)	Ordering Code	Package Name	Package Type	Operating Range
70	WCMA1008U1X-TF70	T32	32-Lead TSOP	Industrial
	WCMA1008U1X-SF70	S32	32-Lead STSOP	
55	WCMA1008U1X-TF55	T32	32-Lead TSOP	
	WCMA1008U1X-SF55	S32	32-Lead STSOP	

Package Diagrams

32-Lead Thin Small Outline Package, T32

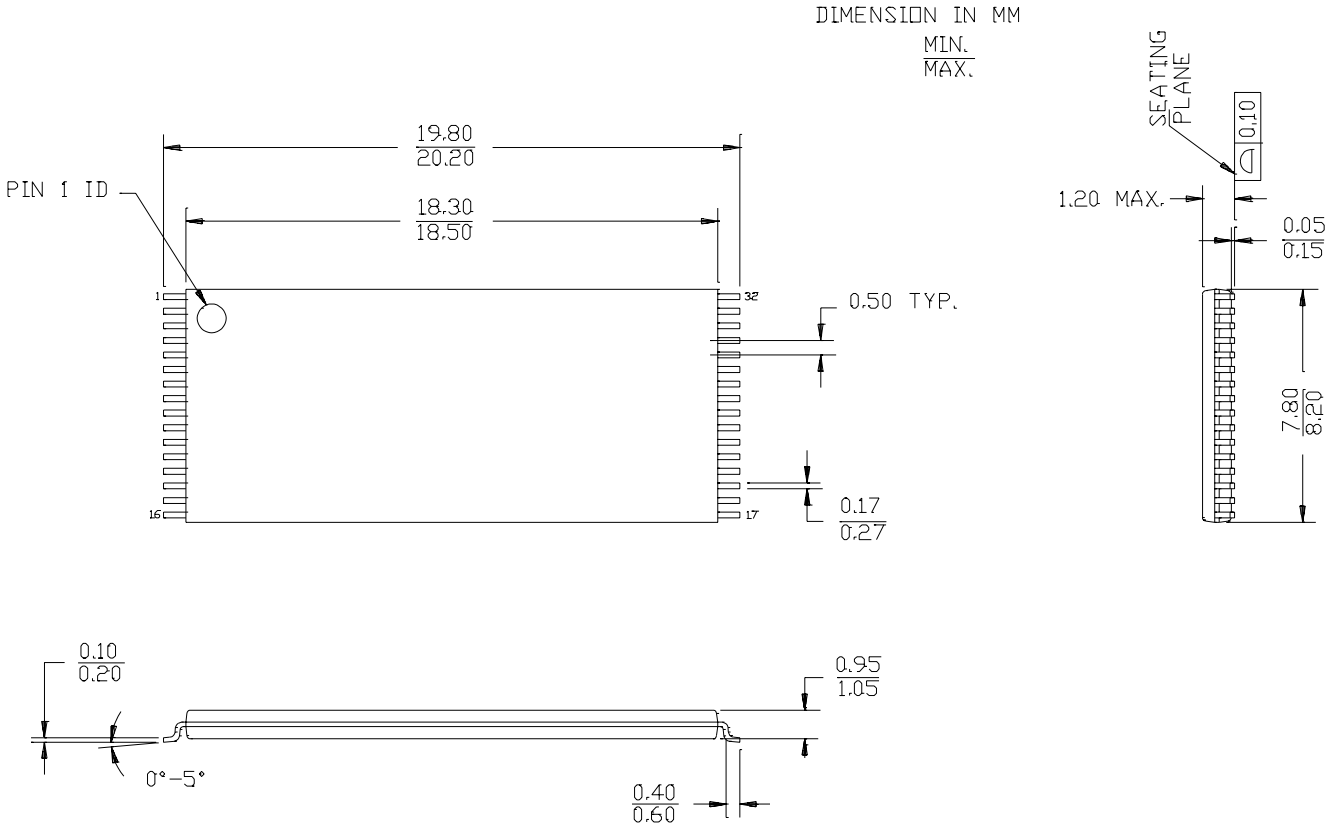

Package Diagrams (continued)

32-Lead Shrunk Thin Small Outline Package, S32

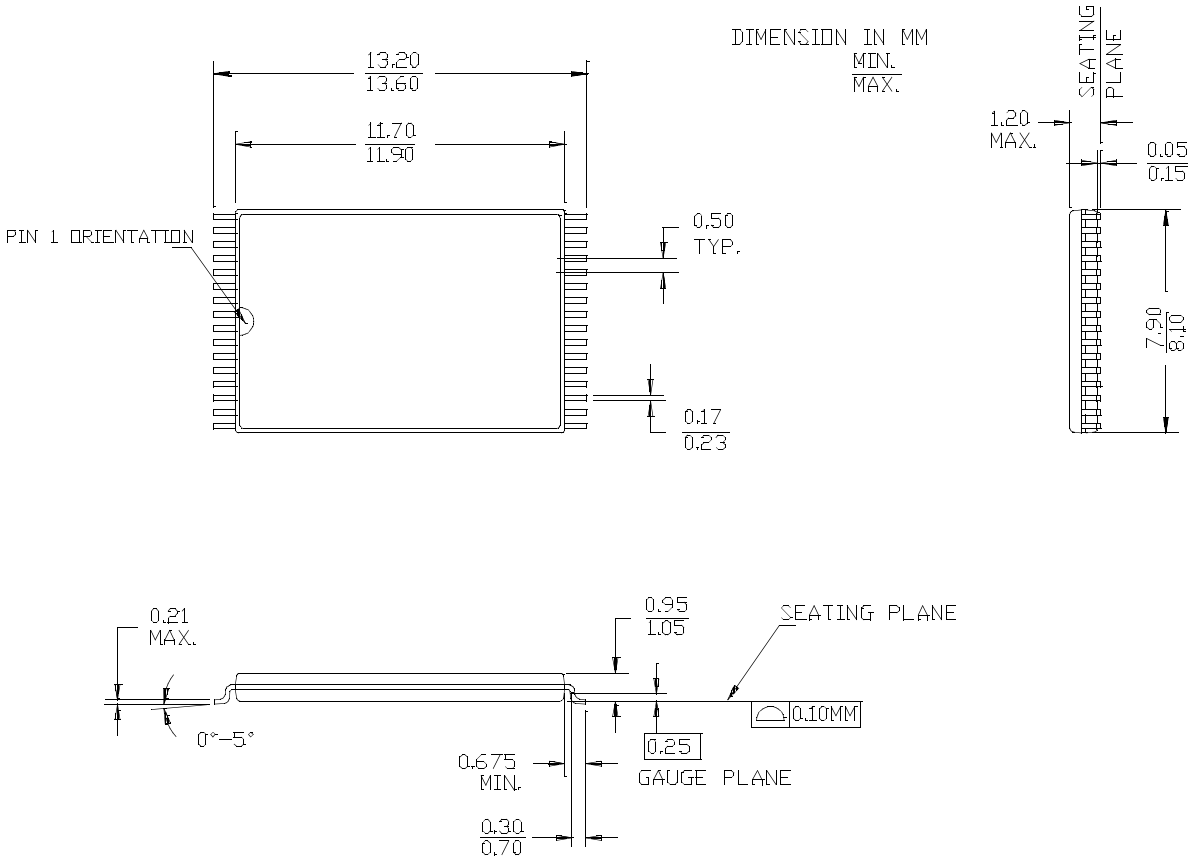

Document Title: WCMA1008U1X, 128K x 8 Static RAM					
REV.	**Spec #**	**ECN #**	**Issue Date**	**Orig. of Change**	**Description of Change**
**	38-14023	115246	4/24/2002	MGN	New Data Sheet

OCEAN CHIPS
Океан Электроники
Поставка электронных компонентов

Компания «Океан Электроники» предлагает заключение долгосрочных отношений при поставках импортных электронных компонентов на взаимовыгодных условиях!

Наши преимущества:

- Поставка оригинальных импортных электронных компонентов напрямую с производств Америки, Европы и Азии, а так же с крупнейших складов мира;
- Широкая линейка поставок активных и пассивных импортных электронных компонентов (более 30 млн. наименований);
- Поставка сложных, дефицитных, либо снятых с производства позиций;
- Оперативные сроки поставки под заказ (от 5 рабочих дней);
- Экспресс доставка в любую точку России;
- Помощь Конструкторского Отдела и консультации квалифицированных инженеров;
- Техническая поддержка проекта, помощь в подборе аналогов, поставка прототипов;
- Поставка электронных компонентов под контролем ВП;
- Система менеджмента качества сертифицирована по Международному стандарту ISO 9001;
- При необходимости вся продукция военного и аэрокосмического назначения проходит испытания и сертификацию в лаборатории (по согласованию с заказчиком);
- Поставка специализированных компонентов военного и аэрокосмического уровня качества (Xilinx, Altera, Analog Devices, Intersil, Interpoint, Microsemi, Actel, Aeroflex, Peregrine, VPT, Syfer, Eurofarad, Texas Instruments, MS Kennedy, Miteq, Cobham, E2V, MA-COM, Hittite, Mini-Circuits, General Dynamics и др.);

Компания «Океан Электроники» является официальным дистрибьютором и эксклюзивным представителем в России одного из крупнейших производителей разъемов военного и аэрокосмического назначения **«JONHON»**, а так же официальным дистрибьютором и эксклюзивным представителем в России производителя высокотехнологичных и надежных решений для передачи СВЧ сигналов **«FORSTAR»**.

AVIC JONHON

«JONHON» (основан в 1970 г.)

Разъемы специального, военного и аэрокосмического назначения:

(Применяются в военной, авиационной, аэрокосмической, морской, железнодорожной, горно- и нефтедобывающей отраслях промышленности)

«FORSTAR» (основан в 1998 г.)

ВЧ соединители, коаксиальные кабели, кабельные сборки и микроволновые компоненты:

(Применяются в телекоммуникациях гражданского и специального назначения, в средствах связи, РЛС, а так же военной, авиационной и аэрокосмической отраслях промышленности).

FORSTAR®

Телефон: 8 (812) 309-75-97 (многоканальный)
Факс: 8 (812) 320-03-32
Электронная почта: ocean@oceanchips.ru
Web: http://oceanchips.ru/
Адрес: 198099, г. Санкт-Петербург, ул. Калинина, д. 2, корп. 4, лит. А