A.HE83134 Introduction

HE83134 is a member of 8-bit Micro-controller series that is developed by King Billion. Users can chose any one of combination among 【640 dots LCD Driver + 12 Bit I/O Port】…【320 dots LCD Driver + 32 Bit I/O Port】etc. (Decide by Mask Option). This IC has built-in one OP comparator. The built-in OP comparator can be used with (light、voice、temperature、humility) sensor. The 7-bit current-type D/A converter and PWM device provide the complete speech output mechanism. The 256K ROM Size can storage around 80 second's speech. This IC is applicable to the medium systems such as LCD Games and Educational Toy etc. Use external SRAM or Flash RAM to have recording function. This IC is applicable to the medium systems such as LCD Games, Education Toy etc. This IC is very easy to learn and use. Most of instructions take only 3 oscillator clocks (machine cycles). As a result this IC is suitable for the applications that require higher performance system.

B.HE83134 Features

- **Operation Voltage：** **2.2V – 5.5V**
- **System Clock：** **DC ~ 8MHz @ 5.0V**
  DC ~ 4MHz @ 2.2V
- **Internal ROM：** **256K Bytes(64K Program ROM +192K Data ROM)**
- **Internal RAM：** **256 Bytes**
- **Dual Clock System ：** **Normal (Fast) clock： 32.768K ~ 8MHz**
  Slow clock： 32.768KHz
- **Operation Mode：** **DUAL、FAST、SLOW、IDLE、SLEEP Mode.**
- **With WDT (WATCH DOG TIMER) to prevent deadlock condition.**
- **12-bit ~ 32-bit Bi-directional I/O port. Mask Option can select PUSH-PULL or OPEN DRAIN output mode for each I/O pin.**
- **One built-in OP comparator.**
- **640 ~320 dots LCD driver (A、B TYPE selectable).**

- **One 7-bit current-type DAC output.**
- **PWM device.**
- **Two external interrupts and two internal timers interrupts.**
- **Two 16-bit timers.**
- **Instruction set： 32 instructions, 4 addressing mode. 8-bit DATA POINTER for RAM and 18-bit TABLE POINTER for ROM.**

C.HE83134 Application

- This IC is applicable to the medium systems such as LCD Games and Educational Toy etc.
- Light, voice, temperature, humility-controlled system's speech. Applicable to the LCD application.
- Use external SRAM or Flash RAM to have recording function.

D. Pin Assignment

Pin #	Pin Name	I/O	Function	Description
77 76	FXI, FXO	B, O	External fast clock pin. Connecting to crystal or RC to generate 32.768 kHz ~ 8MHz system clock.	Mask Option settings： MO_FCK/SCKN=00：Slow Clock only 01：Illegal 10：Dual Clock 11：Fast Clock only MO_FOSCE=0：Internal fast oscillation 1： External fast oscillation MO_FXTAL=0：R,C oscillation for Fast Clock 1：Crystal oscillation for Fast Clock MO_SXTAL=0：R,C oscillation for 32.768K Clock 1：Crystal oscillation for 32.768K Clock。 Program the value of OP1and OP2 to change the operating modes (Normal, Slow, Idle and Sleep). In Dual Clock mode , the system runs in Fast Clock, only the LCD and timer I use the 32.768K clock source。
80 79	SXI, SXO	I, O	External slow clock pin. Connecting with 32.768 Hz OSC to generate the stable frequency for Slow Clock Mode and Timer clock source.	

75	RSTP_N	I	System Reset Signal.	Pull this pin to low level to reset the system. Besides, select the Mask Option (MQ_PORE=1) to enable the HE83134 internal Power-on Reset function. In addition, the MO_WDTE is used for Watch Timer setting： MO_WDTE=0：Disable Watch Dog Timer =1：Enable Watch Dog Timer
78	TSTP_P	I	Test Pin	Pull the pin to high level to enter into testing mode.
90.. 92 1	PRTC[3:0]	I	Port C bi-directional I/O Pin (4Pins)	Mask Option MO_CPP[3:0] to preset the output type： MO_CPP=1 : Push-pull output; =0 : Open-drain output When assigned the port to input pin, send a ’1’ and read the result to get the input value
82.. 89	PRTD[7:0]	B	Port D bi-directional I/O pin，(8 pins). PRTD[7:2] is also a Wake-up pin and PRTD[7:6] is used for interrupt input pin.	Mask Option MO_DPP[7:0] to preset the output type： MO_DPP=1 : Push-pull output; =0 : Open-drain output When assigned the port to input pin, send a ’1’ and read the result to get the input value
12.. 15	PRT17[7:4]/ SEG[39:36]	B/ O	Port 17 bi-directional pin(4pins) or LCD Segment[39:36]	Mask Option MO_LIO17[7:4] Set 4 pins to be I/O or LCD Segment: MO_LIO17[7:0]=0；I/O Pin。=1；LCD Pin I/O Pin Assigned Mask Option MO_17PP[7:4] MO_17PP[7:4]=0；Open-drain output =1；Push-pull output

16.. 23	PRT15[7:0]/ SEG[35:28]	B/ O	Port 15 bi-directional pin(8pins) or LCD Segment[35:28]	Mask Option MO_LIO15[7:0] Set 8 pins to be I/O or LCD Segment: MO_LIO15[7:0]=0；I/O Pin=1；LCD Pin I/O Pin Assigned Mask Option MO_15PP[7:0] MO_15PP[7:0]=0；Open-drain output =1；Push-pull output
24 31	PRT14[7:0]/ SEG[27:20]	B/ O	Port 14 bi-directional pin(8pins) or LCD Segment[27:20]	Mask Option MO_LIO14[7:0] Set 8 pins to be I/O or LCD Segment： MO_LIO14[7:0]=0；I/O Pin=1；LCD Pin I/O Pin Assigned Mask Option MO_14PP[7:0] MO_14PP[7:0]= 0；Open-drain output = 1；Push-pull output
11..4 52.. 59	COM[15:0]	O	LCD COMmon Output	Data filled from D8H, please refer the LCD RAM Map
32.. 51	SEG[19:0]	O	LCD SEGment Output	
61	LC2	B	Charge Pump Switch 2	LV3=VDD，Charge Pump for LCD is turn off. Take one 0.1 μF capacitor between LC1 and LC2 off. Please refer the application circuit in order to avoid power consumption.
60	LC1	B	Charge Pump Switch 1	
63	LV3	B	Charge Pump V3	Please refer the application circuit.
62	LV1	B	Charge Pump V1	
64.. 67	LR[4..1]	B	LCD Resister level 4 ~ 1	Please refer the application circuit.
68	LVG	I	LCD Virtual Ground	
			PWM +ve output pin can directly drive Speaker	Set the Bit2 for VOC register (PWM =1) to turn on the PWM

2	**PWMP**	**O**	**or Buzzer for sound output.**	**the PWM**
3	**PWMN**	**O**	**PWM -ve output pin can directly drive Speaker or Buzzer for sound output.**	**Set the Bit2 for VOC register (PWM =1) to turn on the PWM**
70	**VO**	**O**	**D/A voice output**	**Set the bit1 (DA=1) of VOC register to turn on VO**
71	**DAO**	**O**	**D/A voice output for OP use.**	**Set the bit0 (OP=1) of VOC register to turn on DAO**
72	**OPIN**	**I**	**OPAMP Inverting pin**	**Set the bit1 (OP=1) register to turn on OP**
73	**OPIP**	**I**	**OPAMP Non-Inverting pin**	**Individual Op comparator**
74	**OPO**	**O**	**OPAMP Output pin**	
81	**VDD**	**P**	**Positive Power Input**	
69	**GND**	**P**	**Power Ground Input**	

E.LCD RAM Map

Page 0	SEG [7:0]	SEG [15:8]	SEG [23:16]	SEG [31:24]	SEG [39:32]
COM0	80H	90H	A0H	B0H	C0H
COM1	81H	91H	A1H	B1H	C1H
COM2	82H	92H	A2H	B2H	C2H
:	:	:	:	:	:
:	:	:	:	:	:
COM13	8DH	9DH	ADH	BDH	CDH
COM14	8EH	9EH	AEH	BEH	CEH
COM15	8FH	9FH	AFH	BFH	CFH

F. Pin Diagram

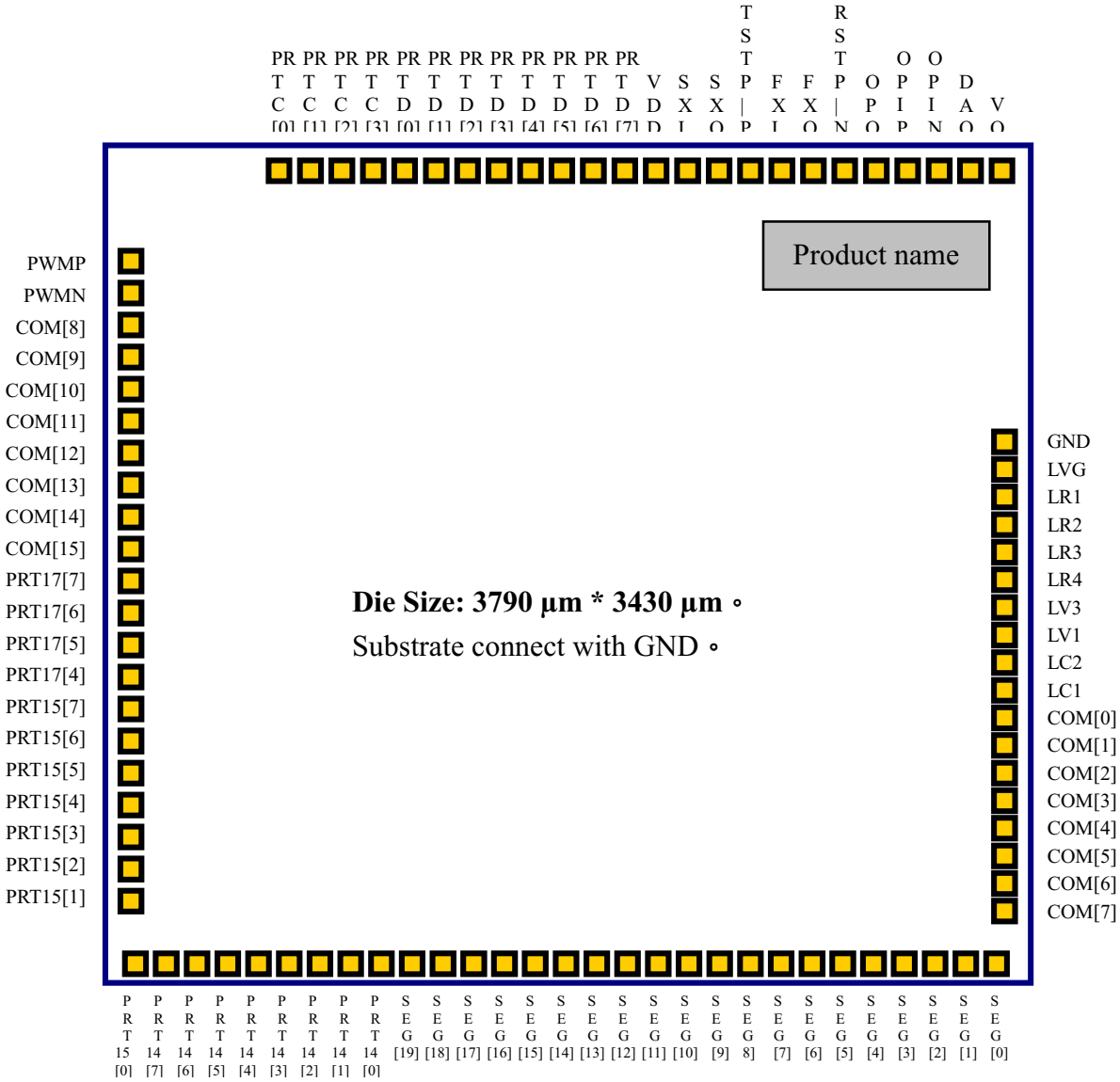

G. Bonding Pad Location

PIN Number	PIN Name	X Coordinate	Y Coordinate	PIN Number	PIN Name	X Coordinate	Y Coordinate
1	PRTC[0]	X= -1011.00	Y= 1635.10	47	SEG[4]	X= 1025.00	Y= -1636.50
2	PWMP	X= -1820.20	Y= 1287.70	48	SEG[3]	X= 1140.50	Y= -1636.50
3	PWMN	X= -1820.20	Y= 1124.30	49	SEG[2]	X= 1256.00	Y= -1636.50
4	COM[8]	X= -1820.20	Y= 985.20	50	SEG[1]	X= 1371.50	Y= -1636.50
5	COM[9]	X= -1820.20	Y= 869.80	51	SEG[0]	X= 1487.00	Y= -1636.50
6	COM[10]	X= -1820.20	Y= 754.20	52	COM[7]	X= 1818.30	Y= -1535.20
7	COM[11]	X= -1820.20	Y= 638.80	53	COM[6]	X= 1818.30	Y= -1419.80
8	COM[12]	X= -1820.20	Y= 523.20	54	COM[5]	X= 1818.30	Y= -1304.20
9	COM[13]	X= -1820.20	Y= 407.80	55	COM[4]	X= 1818.30	Y= -1188.80
10	COM[14]	X= -1820.20	Y= 292.20	56	COM[3]	X= 1818.30	Y= -1073.20
11	COM[15]	X= -1820.20	Y= 176.80	57	COM[2]	X= 1818.30	Y= -957.80
12	PRT17[7]	X= -1820.20	Y= 61.20	58	COM[1]	X= 1818.30	Y= -842.20
13	PRT17[6]	X= -1820.20	Y= -54.20	59	COM[0]	X= 1818.30	Y= -726.80
14	PRT17[5]	X= -1820.20	Y= -169.80	60	LC1	X= 1818.30	Y= -611.20
15	PRT17[4]	X= -1820.20	Y= -285.20	61	LC2	X= 1818.30	Y= -495.80
16	PRT15[7]	X= -1820.20	Y= -400.80	62	LV1	X= 1818.30	Y= -380.20
17	PRT15[6]	X= -1820.20	Y= -516.20	63	LV3	X= 1818.30	Y= -264.80
18	PRT15[5]	X= -1820.20	Y= -631.80	64	LR4	X= 1818.30	Y= -149.20
19	PRT15[4]	X= -1820.20	Y= -747.20	65	LR3	X= 1818.30	Y= -33.80
20	PRT15[3]	X= -1820.20	Y= -862.80	66	LR2	X= 1818.30	Y= 81.80
21	PRT15[2]	X= -1820.20	Y= -978.20	67	LR1	X= 1818.30	Y= 197.20
22	PRT15[1]	X= -1820.20	Y= -1093.80	68	LVG	X= 1818.30	Y= 312.80
23	PRT15[0]	X= -1747.00	Y= -1636.50	69	GND	X= 1818.30	Y= 428.20
24	PRT14[7]	X= -1631.50	Y= -1636.50	70	VO	X= 1699.90	Y= 1634.40

25	PRT14[6]	X= -1516.00	Y= -1636.50	71	DAO	X= 1548.10	Y= 1634.40
26	PRT14[5]	X= -1400.50	Y= -1636.50	72	OPIN	X= 1414.50	Y= 1635.10
27	PRT14[4]	X= -1285.00	Y= -1636.50	73	OPIP	X= 1299.00	Y= 1635.10
28	PRT14[3]	X= -1169.50	Y= -1636.50	74	OPO	X= 1183.50	Y= 1635.10
29	PRT14[2]	X= -1054.00	Y= -1636.50	75	RSTP_N	X= 1068.00	Y= 1635.10
30	PRT14[1]	X= -938.50	Y= -1636.50	76	FXO	X= 952.50	Y= 1635.10
31	PRT14[0]	X= -823.00	Y= -1636.50	77	FXI	X= 837.00	Y= 1635.10
32	SEG[19]	X= -707.50	Y= -1636.50	78	TSTP_P	X= 721.50	Y= 1635.10
33	SEG[18]	X= -592.00	Y= -1636.50	79	SXO	X= 606.00	Y= 1635.10
34	SEG[17]	X= -476.60	Y= -1636.50	80	SXI	X= 490.40	Y= 1635.10
35	SEG[16]	X= -361.10	Y= -1636.50	81	VDD	X= 374.90	Y= 1635.10
36	SEG[15]	X= -245.60	Y= -1636.50	82	PRTD[7]	X= 259.40	Y= 1635.10
37	SEG[14]	X= -130.10	Y= -1636.50	83	PRTD[6]	X= 143.90	Y= 1635.10
38	SEG[13]	X= -14.60	Y= -1636.50	84	PRTD[5]	X= 28.40	Y= 1635.10
39	SEG[12]	X= 101.00	Y= -1636.50	85	PRTD[4]	X= -87.10	Y= 1635.10
40	SEG[11]	X= 216.40	Y= -1636.50	86	PRTD[3]	X= -202.60	Y= 1635.10
41	SEG[10]	X= 331.90	Y= -1636.50	87	PRTD[2]	X= -318.10	Y= 1635.10
42	SEG[9]	X= 447.40	Y= -1636.50	88	PRTD[1]	X= -433.60	Y= 1635.10
43	SEG[8]	X= 563.00	Y= -1636.50	89	PRTD[0]	X= -549.10	Y= 1635.10
44	SEG[7]	X= 678.50	Y= -1636.50	90	PRTC[3]	X= -664.60	Y= 1635.10
45	SEG[6]	X= 794.00	Y= -1636.50	91	PRTC[2]	X= -780.10	Y= 1635.10
46	SEG[5]	X= 909.50	Y= -1636.50	92	PRTC[1]	X= -895.60	Y= 1635.10

H. DA/DC Characteristics

Absolute Maximum Rating

Item	Sym.	Rating	Condition
Supply Voltage	V_{dd}	-0.5V ~ 8V	
Input Voltage	V_{in}	-0.5V ~ V_{dd}+0.5V	
Output Voltage	V_o	-0.5V ~ V_{dd}+0.5V	
Operating Temperature	T_{op}	0^0C ~ 70^0C	
Storage Temperature	T_{st}	-50^0C ~ 100^0C	

Recommended Operating Conditions

Item	Sym.	Rating	Condition
Supply Voltage	V_{dd}	2.2V ~ 5.5V	
Input Voltage	V_{ih}	0.9 V_{dd} ~ V_{dd}	
	V_{il}	0.0V ~ 0.1V_{dd}	
Operating Frequency	Fmax	8MHz	V_{dd} =5.0V
		4MHz	V_{dd} =2.2V
Operating Temperature	T_{op}	0^0C ~ 70^0C	
Storage Temperature	T_{st}	-50^0C ~ 100^0C	

Test Condition : TEMP=25℃, VDD=3V+/-10%, GND=0V

	PARAMETER		CONDITION	MIN	TYP	MAX	UNIT
I_{Fast}	NORMAL Mode Current	System	2M ext. R/C		0.75	1	mA
I_{Slow}	SLOW Mode Current	System	32.768K X'tal LCD Disable		10	20	μA
I_{Idle}	IDLE Mode Current	System	32.769K X'tal LCD Disable		6	10	μA
I_{LCD}	Extra Current if LCD ON	System	LCD Enable, LCD option=300Kohm Voltage-doubler OFF		12	20	μA
			LCD Enable, LCD option=30Kohm, Voltage-doubler ON		100	120	
I_{Sleep}	Sleep Mode Current	System				1	μA
I_{oHPWM}	PWM Output Drive Current	PWMP, PWMN*2	V_{DD}=3V; V_{oh}=2V	12	15		mA
I_{oLPWM}	PWM Output Sink Current	PWMP, PWMN*2	V_{DD}=3V; V_{oL}=1V	33	40		mA
I_{oVO}	DAC Output Current	VO, DAO	V_{DD}=3V;VO=0~2V,Data=7F	2.5	3		mA
V_{iH}	Input High Voltage	I/O pins		0.8 V_{DD}			V
V_{iL}	Input Low Voltage	I/O pins				0.2 V_{DD}	V
V_{hys}	Input Hysteresis Width	I/O, RSTP_N	Threshold=2/3V_{DD}(input from low to high) Threshold=1/3V_{DD}(input from high to low)		1/3 V_{DD}		V
I_{oH}	Output Drive Current	I/O pull-high*1	V_{oL}=2.0V	50			μA
I_{oL_1}	Output Sink Current	I/O pull-low*1	V_{oL}=0.4V	1.0			mA
I_{iL_1}	Input Low Current	RSTP_N	V_{iL}=GND, pull high Internally		20		μA
I_{iL_2}	Input Low Current	I/O	V_{iL}=GND, if pull high Internally by user		100		μA

Note: *1: Drive Current Spec. for Push-Pull I/O port only
Sink Current Spec. for both Push-Pull and Open-Drain I/O port.

*2: This Spec. base on one driver only. There are five build-in driver, so user just multiply the number of driver he used to one driver current to get the total amount of current.(I_{oHPWM} 、I_{oLPWM} * N; N=0,1,2,3,4,5)

I. Application Circuit

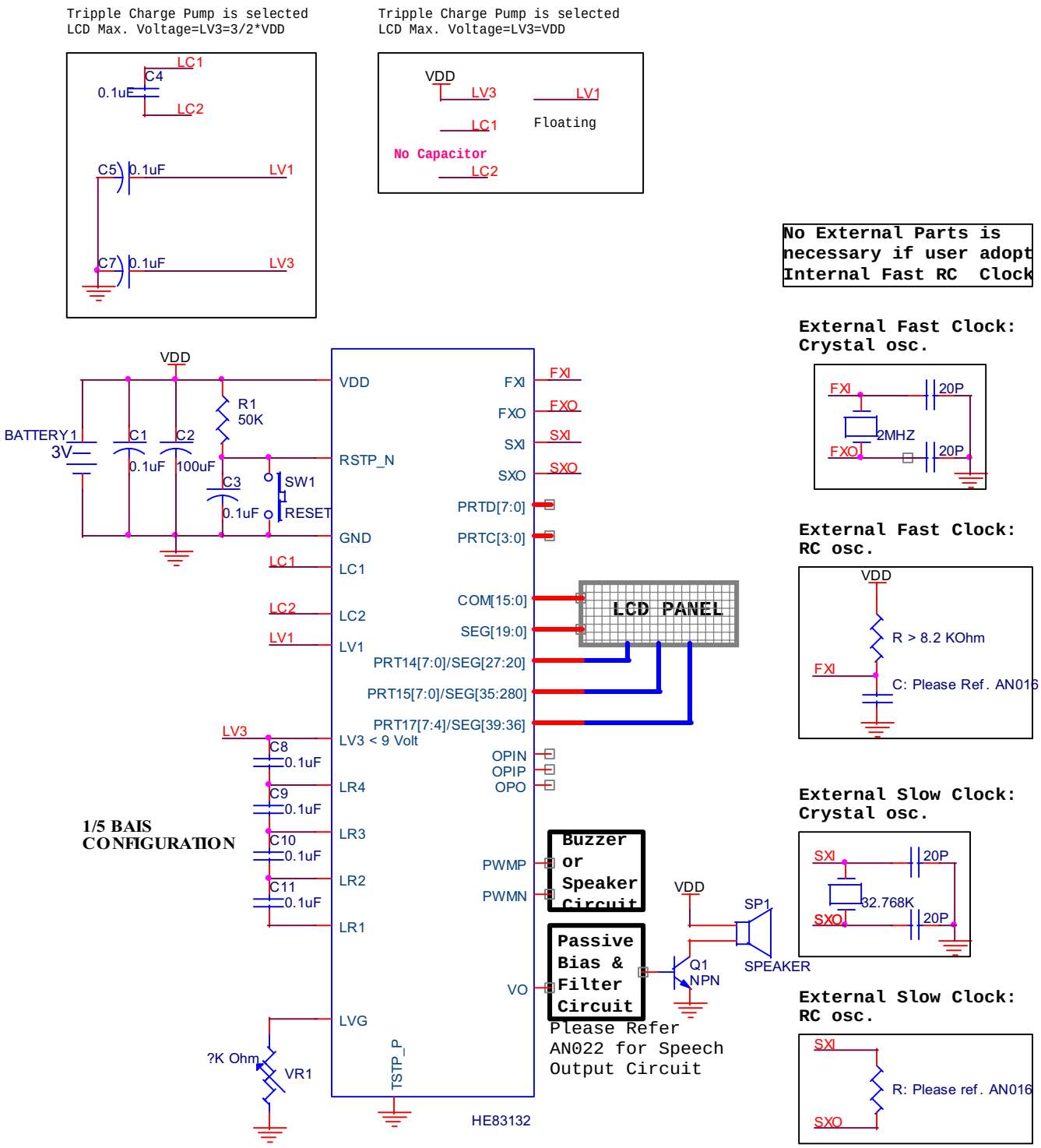

OCEAN CHIPS
Океан Электроники
Поставка электронных компонентов

Компания «Океан Электроники» предлагает заключение долгосрочных отношений при поставках импортных электронных компонентов на взаимовыгодных условиях!

Наши преимущества:

- Поставка оригинальных импортных электронных компонентов напрямую с производств Америки, Европы и Азии, а так же с крупнейших складов мира;
- Широкая линейка поставок активных и пассивных импортных электронных компонентов (более 30 млн. наименований);
- Поставка сложных, дефицитных, либо снятых с производства позиций;
- Оперативные сроки поставки под заказ (от 5 рабочих дней);
- Экспресс доставка в любую точку России;
- Помощь Конструкторского Отдела и консультации квалифицированных инженеров;
- Техническая поддержка проекта, помощь в подборе аналогов, поставка прототипов;
- Поставка электронных компонентов под контролем ВП;
- Система менеджмента качества сертифицирована по Международному стандарту ISO 9001;
- При необходимости вся продукция военного и аэрокосмического назначения проходит испытания и сертификацию в лаборатории (по согласованию с заказчиком);
- Поставка специализированных компонентов военного и аэрокосмического уровня качества (Xilinx, Altera, Analog Devices, Intersil, Interpoint, Microsemi, Actel, Aeroflex, Peregrine, VPT, Syfer, Eurofarad, Texas Instruments, MS Kennedy, Miteq, Cobham, E2V, MA-COM, Hittite, Mini-Circuits, General Dynamics и др.);

Компания «Океан Электроники» является официальным дистрибьютором и эксклюзивным представителем в России одного из крупнейших производителей разъемов военного и аэрокосмического назначения **«JONHON»**, а так же официальным дистрибьютором и эксклюзивным представителем в России производителя высокотехнологичных и надежных решений для передачи СВЧ сигналов **«FORSTAR»**.

AVIC JONHON

«JONHON» (основан в 1970 г.)

Разъемы специального, военного и аэрокосмического назначения:

(Применяются в военной, авиационной, аэрокосмической, морской, железнодорожной, горно- и нефтедобывающей отраслях промышленности)

«FORSTAR» (основан в 1998 г.)

ВЧ соединители, коаксиальные кабели, кабельные сборки и микроволновые компоненты:

(Применяются в телекоммуникациях гражданского и специального назначения, в средствах связи, РЛС, а так же военной, авиационной и аэрокосмической отраслях промышленности).

FORSTAR®

Телефон: 8 (812) 309-75-97 (многоканальный)
Факс: 8 (812) 320-03-32
Электронная почта: ocean@oceanchips.ru
Web: http://oceanchips.ru/
Адрес: 198099, г. Санкт-Петербург, ул. Калинина, д. 2, корп. 4, лит. А