PROPER USE GUIDELINES

Cumulative Trauma Disorders can result from the prolonged use of manually powered hand tools. Hand tools are intended for occasional use and low volume applications. A wide selection of powered application equipment for extended-use, production operations is available.

Crimping Dies for SOLISTRAND Terminals and Splices

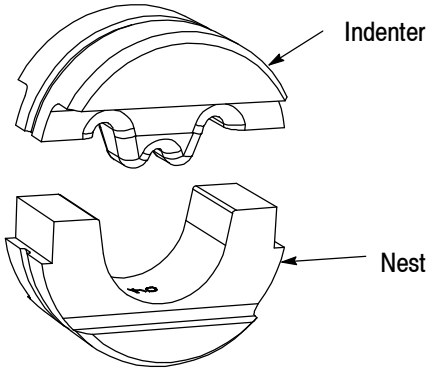

NOTE: Figures and illustrations are for reference only, and are not drawn to scale.

DIES		NOMINAL WIRE SIZE		TYPICAL PRODUCT	MM² [CIRCULAR MIL AREA RANGE]	TOOL OR HEAD NUMBER
NEST	INDENTER	MM²	AWG			
1490413-1▪ 1-1490413-4+	1490414-1▪	7 - 8	8	33463 / RTT◆	6.637 - 10.539 [13.100 - 20.800]	Head Number 1901820-1, 1901821-1, 1490747-1 Hydraulic Hand Tool Number 1490748-1, 1490749-1
1490413-9●	1490414-2●					
1490413-2▪ 1-1490413-5+	1490414-2▪	13 - 15	6	33466 / RTT◆	10.539 - 16.771 [20.800 - 33.100]	
1-1490413-0●	1490414-2●					
1490413-3▪ 1-1490413-6+	1490414-2▪	21	4	34323 / BS†	16.771 - 26.653 [33.100 - 52.600]	
1-1490413-1●	1490414-2●					
1490413-4▪ 1-1490413-7+	1490414-2▪	34 - 35	2	35187 / PS▲	26.653 - 42.411 [52.600 - 83.700]	
1-1490413-2●	1490414-3●					
1490413-5▪ 1-1490413-8+	1490414-3▪	59 - 60	1/0	36946 / PS▲	42.411 - 60.551 [83.700 - 119.500]	
1-1490413-3●	1490414-3●					
1490413-6 1-1490413-9+	1490414-3	67 - 70	2/0	36948 / PS▲	60.551 - 72.259 [119.500 - 150.500]	
1490413-7 2-1490413-0+		80 - 95	3/0	36927 / RTT◆	72.259 - 96.274 [150.500 - 190.000]	
1490413-8 2-1490413-1+		100 - 125	4/0	36932 / RTT◆	96.274 - 117.049 [190.000 - 231.000]	

▪Also used for STRATO-THERM* Heat Resistant Uninsulated Terminals ◆RTT=Ring Tongue Terminals †BS=Butt Splice ▲PS=Parallel Splice ●Dies for Heavy Duty Terminals +90° Bend Terminals

Figure 1

1. INTRODUCTION

This instruction sheet provides application instructions, maintenance, and inspection procedures for the dies listed in Figure 1. These dies crimp SOLISTRAND ring tongue terminals, butt splices, and parallel splices to solid or stranded copper wire (also listed in Figure 1).

The dies are used in Hydraulic Heads 1901820-1, 1901821-1, 149047-1, and Hydraulic Hand Tools 1490748-1 and 1490749-1. Refer to Figure 1 and Figure 2.

©2011 Tyco Electronics Corporation, a TE Connectivity Ltd. Company
All Rights Reserved
*Trademark

TE Connectivity, TE connectivity (logo), and TE (logo) are trademarks. Other logos, product and/or Company names may be trademarks of their respective owners.

Tools Using Crimping Dies for SOLISTRAND Terminals and Splices (Refer to Figure 1)

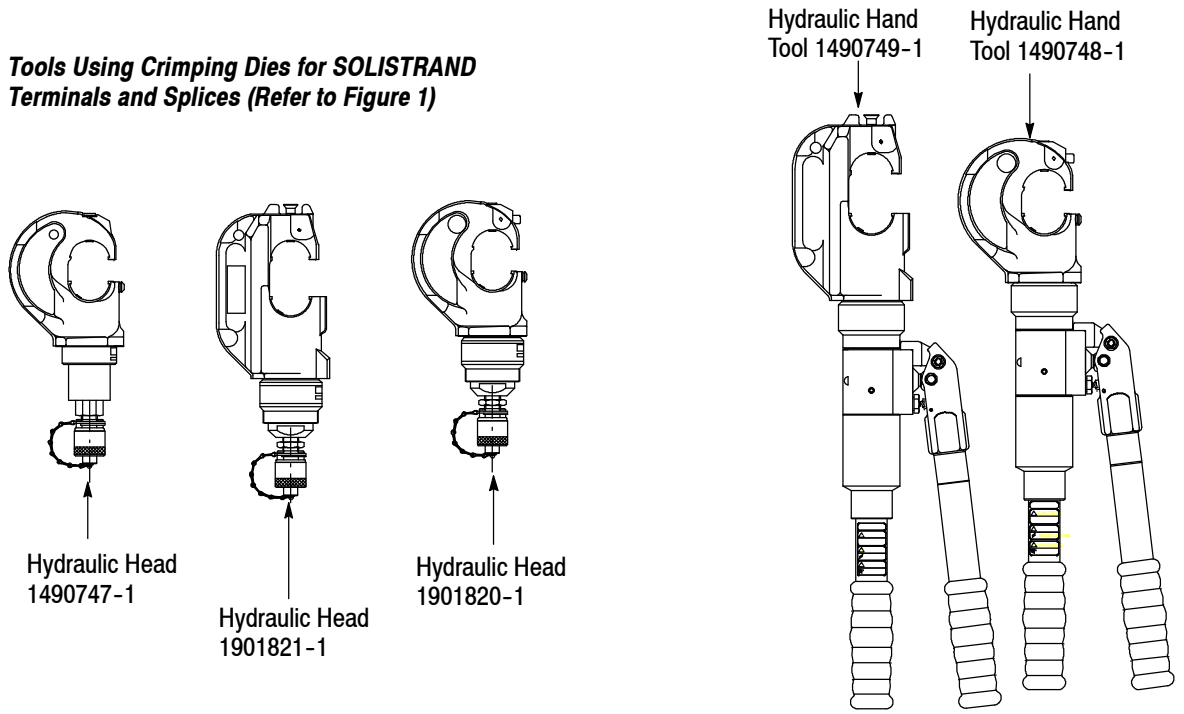

Figure 2

NOTE

All dimensions on this document are in metric units [with U. S. customary units in brackets]. Figures and illustrations are for reference only and are not drawn to scale.

Reason for revision is given in Section 7, REVISION SUMMARY.

2. DESCRIPTION

Each die assembly consists of a nest and an indenter (ordered separately) which are retained in the crimping head by retainer pins. The nest is positioned in the yoke of the crimping head, and the indenter is positioned in the ram of the tool.

3. DIE INSTALLATION AND REMOVAL

Refer to Figure 1 and determine the correct die assembly, wire size, product number, and tool head to be used together.

CAUTION

Never operate the tool with the dies removed.

3.1. Die Installation (Figure 3)

DANGER

To avoid personal injury, be sure to exercise extreme caution when using the power unit. Avoid depressing the footswitch or trigger control when installing or removing dies.

1. Depress the upper die release button located in the “C”-head.

2. Slide the nest into place in “C”-head. See Figure 3.

3. Release the button and rock the die back and forth until the nest snaps into position.

4. Activate the power unit until the lower die release button located in the ram is exposed.

5. Depress the release button.

6. Slide the indenter into position in the ram. See Figure 3.

7. Release the button and rock the indenter back and forth until the die snaps into position.

8. Return ram to the down position.

3.2. Die Removal (Figure 3)

1. Depress the upper release button located in the “C”-head and slide the nest out of the head.

2. Activate the power unit until the lower die release button (located in the ram) is exposed.

3. Depress the die release button and slide the indenter out of the ram.

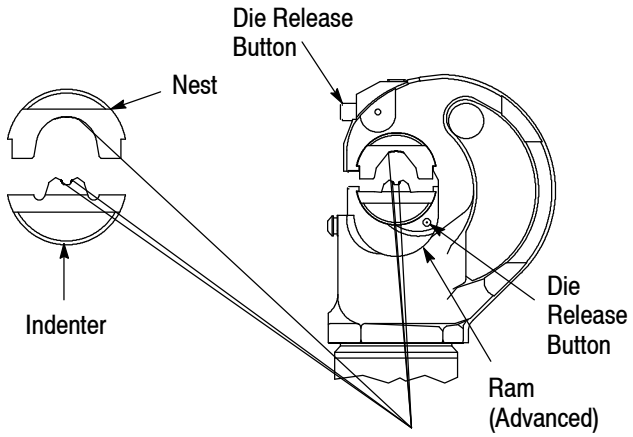

Figure 3

4. WIRE STRIPPING AND CRIMPING PROCEDURES

4.1. Wire Stripping

Strip wire to the dimensions listed in Figure 4. Do NOT nick or cut the wire strands.

4.2. Crimping Procedure

DANGER STOP

To avoid personal injury, be sure to exercise caution while holding terminals, splices or wire near the crimping area of power units.

1. Ensure that the wire range or size stamped on the terminal or splice corresponds with the wire size being used and the wire range or size stamped on the nest and indenter.

2. Center terminal or splice in nest as shown in Figure 5. For best results, when brazed seam on terminal or splice is visible, position seam toward indenter.

3. Activate power unit so that ram advances and holds terminal or splice in place. Do NOT deform terminal or splice wire barrel.

4. Insert stripped wire into terminal or **parallel splice** until end of conductor is flush with or extended slightly beyond end of wire barrel.

5. Insert stripped wire into **butt splice** until end of conductor butts against splice wire stop.

6. Activate power unit to complete the crimp.

NOTE i

If terminal sticks in die after crimping, grasp wire close to crimp and apply a rocking motion to remove from die.

7. For butt splice, repeat steps 5 and 6 for other wire barrel.

8. Refer to Paragraph 5.1, Crimp Inspection, for standard terminal, butt splice, and parallel splice crimp inspection.

5. INSPECTION/MAINTENANCE

DANGER STOP

To avoid personal injury, disconnect the power supply before performing maintenance, adjustments, inspections and repairs.

5.1. Crimp Inspection (Figure 6)

NOTE i

The accompanying procedure is included as an aid to the tool operator ONLY. It is not intended to serve as a quality control procedure for qualifying finished crimps on SOLISTRAND terminals or splices.

Inspect crimped terminals or splices by checking the features described in Figure 6. Use only terminals or splices that meet the conditions shown in the ACCEPT column. Terminals and splices displaying the features shown in the REJECT column can be avoided by careful use of these instructions and by performing the maintenance and inspection procedures described in Paragraphs in 5.2 and 5.3.

5.2. Daily Maintenance

It is recommended that each operator of the dies be made aware of, and responsible for, the following steps of daily maintenance:

1. Remove dust, moisture, and other contaminants from the dies with a clean brush, or a clean, soft, lint-free cloth. Do NOT use objects that could damage the dies.

2. If dies are coated with oil or preservative, wipe clean — particularly in the crimping areas — before placing them in use.

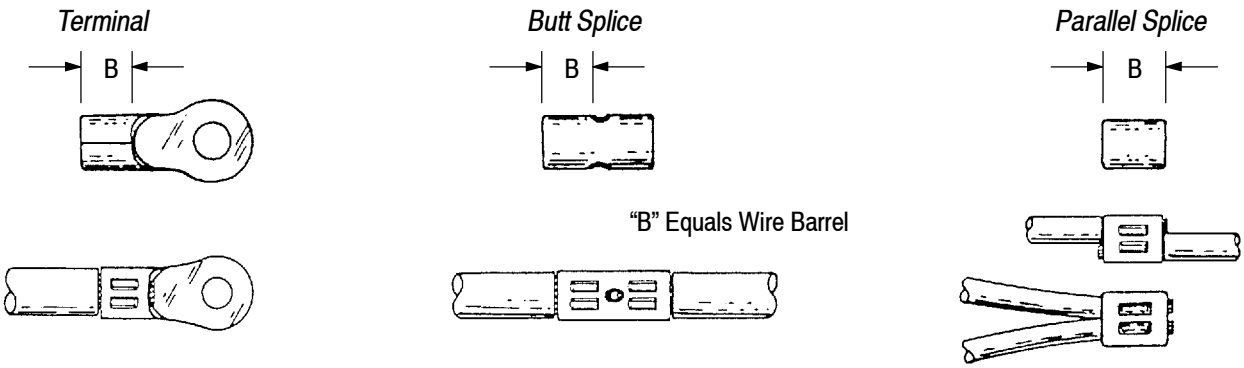

NOMINAL WIRE SIZE		mm²	STRIP LENGTHS					
			RING TONGUE TERMINALS		BUTT SPLICES		PARALLEL SPLICES	
mm²	AWG	CMA RANGE	MIN	MAX	MIN	MAX	MIN	MAX
7-8	8	6.637-10.539 [13,100-20.800]	8.334 [0.328]	9.128 [0.359]	10.319 [0.406]	11.112 [0.437]	10.319 [0.406]	11.112 [0.437]
13-15	6	10.539-16.771 [20,800-33,100]	9.922 [0.391]	13.255 [0.522]	11.906 [0.469]	12.700 [0.50]	11.112 [0.437]	11.906 [0.469]
21	4	16.771-26.653 [33,100-52,600]	11.509 [0.453]	12.302 [0.484]	13.493 [0.531]	14.288 [0.563]	13.493 [0.531]	14.288 [0.563]
34-35	2	26.653-42.411 [52,600-83,700]	13.096 [0.516]	13.890 [0.547]	15.081 [0.594]	15.875 [0.625]	15.081 [0.594]	15.875 [0.625]
59-60	1/0	42.411-60.551 [83,700-119,500]	18.653 [0.734]	20.240 [0.797]	15.875 [0.625]	17.462 [0.687]	17.462 [0.687]	19.050 [0.750]
67-70	2/0	60.551-72.259 [119,500-150,500]						
80-95	3/0	72.259-96.274 [150,500-190,000]	19.050 [0.750]	20.637 [0.812]	17.463 [0.687]	19.050 [0.750]	17.463 [0.687]	19.050 [0.750]
100-125	4/0	96.274-117.049 [190,000-231,000]	19.446 [0.776]	20.637 [0.812]	17.463 [0.687]	19.050 [0.750]	19.050 [0.750]	20.637 [0.812]

Figure 4

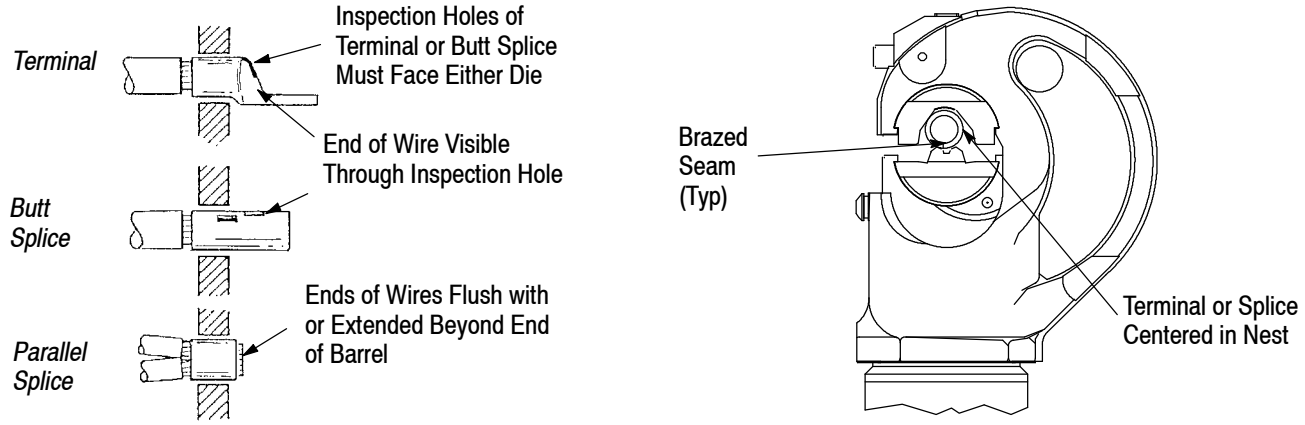

Figure 5

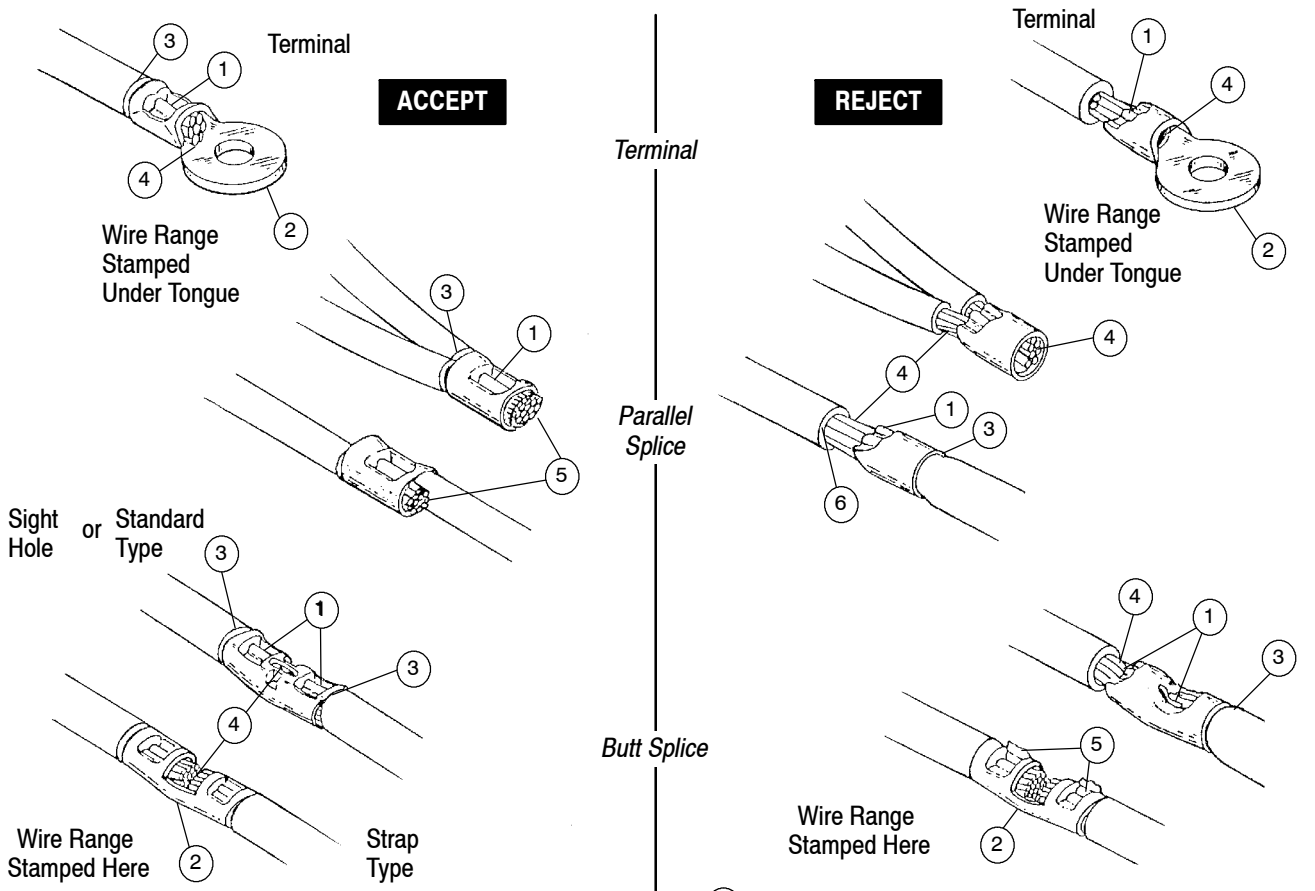

1. Crimps centered. Crimps may be off center BUT NOT OFF END OF WIRE BARREL.
2. AWG wire size being used matches wire range or size stamped on terminal or splice and dies.
3. Insulation does not enter wire barrel.
4. Wire is visible through inspection hole of butt splices. Wire is flush with or extends slightly beyond end of terminal wire barrel.
5. On parallel splices, bare wire ends must be flush with or extended slightly beyond end of barrel.

1. Crimped off end of splice or terminal wire barrel.
2. AWG wire size being used does not match wire size or range stamped on terminal or splice and dies.
3. Insulation entered barrel of terminal or splice. CHECK FOR INCORRECT STRIP LENGTH.
4. Wire not inserted far enough in terminal or splice. End of wire must be visible through inspection hole of butt splices, and be flush with or extend slightly beyond end of terminal wire barrel or parallel splice.
5. Excessive “flash” on terminal or splice indicates damaged dies or wrong wire, splice, or tooling combination was used.
6. Nicked or missing strands.

Figure 6

3. When dies are not in use, make certain all surfaces are protected with a THIN coat of any good SAE 20 motor oil, and mate and store them in a clean, dry area.

5.3. Periodic Inspection

Regular inspections should be performed by quality control personnel. A record of scheduled inspections should remain with the dies or be made available to supervisory personnel responsible for the dies. Though recommendations call for at least a monthly inspection, the inspection frequency should be based upon the amount of use, working conditions, operator training and skill, and established company standards. These inspections should be performed in the following sequence:

A. Visual Inspection (Figure 7)

1. Remove all lubrication and accumulated film by immersing the dies in a suitable degreaser that will not affect paint or plastic.

2. Check all surfaces for wear. Inspect the crimp area for flattened, chipped, cracked, worn, or broken areas. If damage is evident, the die must be replaced.

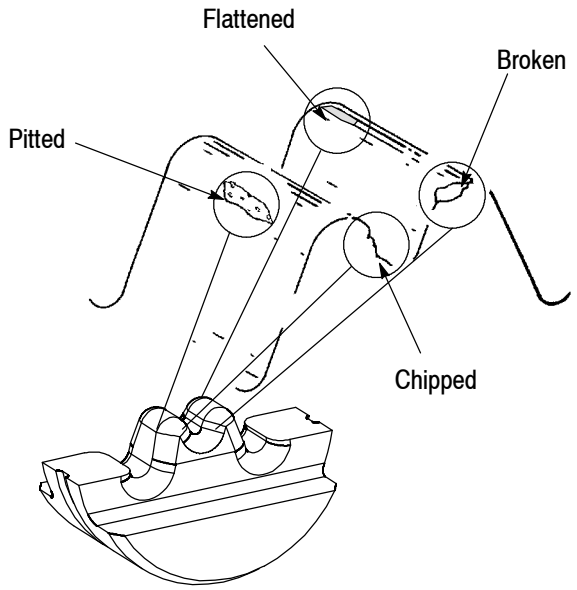

Figure 7

B. Gaging the Crimping Chamber (Figures 8 and 9)

The inspection requires the use of a plug gage conforming to the dimensions in Figure 9. TE Connectivity does not manufacture or market these gages.

Proceed as follows:

1. Mate the dies until it is evident that they have bottomed. Hold the dies in this position.

2. Align the GO element with the wire barrel crimping chamber. Push the element straight into the the crimping chamber without using force. The GO element must pass completely through the crimping chamber.

3. Align the NO-GO element and try to insert it straight into the same crimping chamber. The NO-GO element may start entry but must not pass completely through. If the crimping chamber conforms to the gage inspection, the dies are considered dimensionally correct. If not, they must be replaced. For additional information regarding the use of a plug gage, refer to Instruction Sheet 408-7424.

6. REPLACEMENT PARTS

When replacement of a die becomes necessary, contact your local TE Representative; call 1-800-526-5142; send a facsimile of your purchase order to 1-717-986-7605; or write to:

CUSTOMER SERVICE (38-35)
TYCO ELECTRONICS CORPORATION
P. O. BOX 3608
HARRISBURG, PA 17105-3608

7. REVISION SUMMARY

- Updated document to corporate requirements.

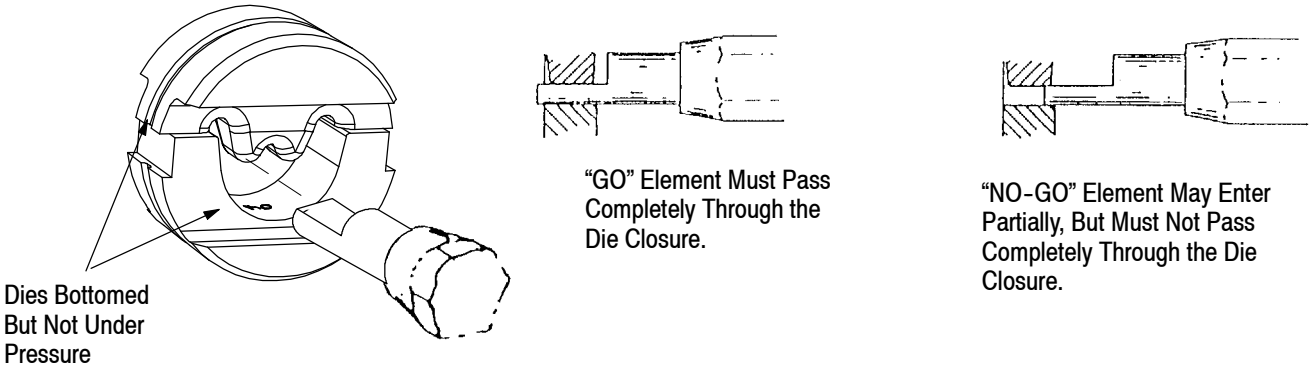

Figure 8

SUGGESTED PLUG GAGE DESIGN

Die Closure Configuration

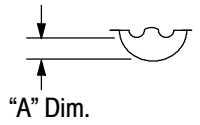

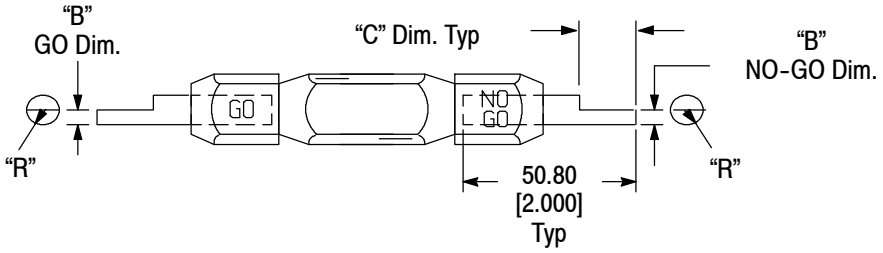

DIES		DIE CLOSURE DIMENSION "A"		GAGE ELEMENT DIMENSIONS "B"		"C" DIMENSION	RADIUS "R"
NEST	INDENTER	GO	NO-GO	GO	NO-GO		
1490413-1 1-1490413-4	1490414-1	2.54 [.1000]	2.692 [.1060]	2.54-2.548 [.1000-.1003]	2.689-2.692 [.1059-.1060]	7.92 [.312]	3.18 [.125]
1490413-2 1-1490413-5	1490414-2	3.911 [.1540]	4.115 [.1620]	3.911-3.919 [.1540-.1543]	4.112-4.115 [.1619-.1620]	11.09 [.437]	4.34 [.171]
1490413-9	1490414-2						
1490413-3 1-1490413-6	1490414-2	4.699 [.1850]	4.902 [.1930]	4.699-4.706 [.1850-.1853]	4.899-4.902 [.1929-.1930]	11.09 [.437]	5.54 [.218]
1-1490413-0	1490414-2						
1490413-4 1-1490413-7	1490414-2	5.410 [.2130]	5.613 [.2210]	5.410-5.418 [.2130-.2133]	5.610-5.613 [.2209-.2210]	11.09 [.437]	6.35 [.250]
1-1490413-1	1490414-2						
1490413-5 1-1490413-8	1490414-3	6.172 [.2430]	6.375 [.2510]	6.172-6.179 [.2430-.2433]	6.372-6.375 [.2509-.2510]	11.09 [.437]	7.52 [.296]
1-1490413-2							
1490413-6 1-1490413-9	1490414-3	6.959 [.2740]	7.163 [.2820]	6.959-6.967 [.2740-.2743]	7.160-7.163 [.2819-.2820]	14.27 [.562]	8.33 [.328]
1-1490413-3							
1490413-7 2-1490413-0	1490414-3	7.823 [.3080]	8.026 [.3160]	7.823-7.830 [.3080-.3083]	8.023-8.026 [.3159-.3160]	14.27 [.562]	9.525 [.375]
1490413-8 2-1490413-1	1490414-3	8.788 [.3460]	8.991 [.3540]	8.788-8.796 [.3460-.3463]	8.989-8.991 [.3539-.3540]		10.693 [.421]

Figure 9

OCEAN CHIPS
Океан Электроники
Поставка электронных компонентов

Компания «Океан Электроники» предлагает заключение долгосрочных отношений при поставках импортных электронных компонентов на взаимовыгодных условиях!

Наши преимущества:

- Поставка оригинальных импортных электронных компонентов напрямую с производств Америки, Европы и Азии, а так же с крупнейших складов мира;
- Широкая линейка поставок активных и пассивных импортных электронных компонентов (более 30 млн. наименований);
- Поставка сложных, дефицитных, либо снятых с производства позиций;
- Оперативные сроки поставки под заказ (от 5 рабочих дней);
- Экспресс доставка в любую точку России;
- Помощь Конструкторского Отдела и консультации квалифицированных инженеров;
- Техническая поддержка проекта, помощь в подборе аналогов, поставка прототипов;
- Поставка электронных компонентов под контролем ВП;
- Система менеджмента качества сертифицирована по Международному стандарту ISO 9001;
- При необходимости вся продукция военного и аэрокосмического назначения проходит испытания и сертификацию в лаборатории (по согласованию с заказчиком);
- Поставка специализированных компонентов военного и аэрокосмического уровня качества (Xilinx, Altera, Analog Devices, Intersil, Interpoint, Microsemi, Actel, Aeroflex, Peregrine, VPT, Syfer, Eurofarad, Texas Instruments, MS Kennedy, Miteq, Cobham, E2V, MA-COM, Hittite, Mini-Circuits, General Dynamics и др.);

Компания «Океан Электроники» является официальным дистрибьютором и эксклюзивным представителем в России одного из крупнейших производителей разъемов военного и аэрокосмического назначения **«JONHON»**, а так же официальным дистрибьютором и эксклюзивным представителем в России производителя высокотехнологичных и надежных решений для передачи СВЧ сигналов **«FORSTAR»**.

AVIC JONHON

«JONHON» (основан в 1970 г.)

Разъемы специального, военного и аэрокосмического назначения:

(Применяются в военной, авиационной, аэрокосмической, морской, железнодорожной, горно- и нефтедобывающей отраслях промышленности)

«FORSTAR» (основан в 1998 г.)

ВЧ соединители, коаксиальные кабели, кабельные сборки и микроволновые компоненты:

(Применяются в телекоммуникациях гражданского и специального назначения, в средствах связи, РЛС, а так же военной, авиационной и аэрокосмической отраслях промышленности).

FORSTAR®

Телефон: 8 (812) 309-75-97 (многоканальный)
Факс: 8 (812) 320-03-32
Электронная почта: ocean@oceanchips.ru
Web: http://oceanchips.ru/
Адрес: 198099, г. Санкт-Петербург, ул. Калинина, д. 2, корп. 4, лит. А