POWER

Modular High Power System

Data Sheet

Up to 24000 Watts

Total Power: Up to 24 KW
Input Voltage: 180-264 Vac
342-528 Vac
Single Phase or
3-Phase
# of Outputs: Up to 8

SPECIAL FEATURES

- 5 years manufacturer's warranty
- Multi output intelligent and modular high power system
- Standard 19" rack
- Outputs parallel up to 1600 A
- Outputs series up to 1000 V
- 100% digital control
- Outputs program as voltage or current source
- Versatile input configurable to:
  - Low line 180-264 Vac single phase and 3-phase
  - High line 342-528 Vac 3-phase
- Medical safety approved – NO ISOLATION XFMR NEEDED
- Flexible control interfaces (Note 1)
- Air cooled
- Semi F47 compliance
- Field upgradeable firmware
- Programmable slew rate
- Fast current slew rate up to 200 Hz
- Active power factor correction
- User defined command profiles

SAFETY

- UL 60950-1 2nd Edition; EN60950-1; IEC60950-1/EN60950
- CSA C22.2 No. 60950-1-07, 2nd Edition
- EN60601-1; IEC60601-1; IEC60601
- UL 60601-1 1st Edition; ANSI/AAMI ES60601-1 (2005 + C1:09 + A2:10) 3rd Ed
- CAN/CSA-C22.2 No. 60601-1 (2008)
- CB Certificate and Report
- CE (LVD+RoHS), EN60950-1

iHP24 Electrical Specifications

Input Parameter	19" Rack 24 KW strapped as 3-phase 380/480 Vac Nominal (iHP24H3A/L)	19" Rack 24 KW strapped as 3-phase 208/240 Vac Nominal (iHP24L3A/L)
Input range	342 Vac to 528 Vac (Nominal rating 380/480 Vac)	187.5 Vac to 264 Vac (Nominal rating 208/240 Vac)
Number of phases	3-phase (Wye or Delta) 4 wire total (3-phase and 1 protective earth ground)	
Frequency	47-63 Hz	
Phase detection	Loss of phase will inhibit unit off. Housekeeping/comms must continue with phase loss.	
Max current/phase	51 A @ 342 Vac 40 A @ 432 Vac	84 A @ 187.5 Vac
Undervoltage detection	Nominal input locked on at turn-on. Undervoltage shutdown at 15% below nominal. Turn-on at 12% below nominal. Not to interfere with SEMI F47 specs.	
Current inrush	2.5 x Max input current	
Power factor	> 0.98 @ full load and nominal line	
Harmonic distortion	THD < 13%, PWHD < 22% (refer to EN 61000-3-12)	
Line interruption	Designed to meet SEMI F47-0706, 53, 58, S14 at nominal input voltages	
Input leakage current	< 2.5 mA (Note for fixed condition 3rd edition leakage = 5 mA)	
Power switch	Front panel power switch provided	
Input protection	Internal fuse (not user serviceable)	
Input overvoltage protection	Up to 115% of nominal input shall not damage unit	
Phase imbalance	≤ 5%	
Rack parallel	Up to 6 racks (144 KW)	
Efficiency	> 90% @ 3P 380 Vac full load > 91% @ 3P 480 Vac full load	> 91% @ 3P 240 Vac full load > 90% @ 3P 208 Vac 3P full load
Standby voltage	5 V	
Standby regulation	4.75 - 5.25 V	
Standby max current	1 A	

Note 1: Analog 0-5 V or 0-10 V separate for voltage or current; Digital Ethernet UDP, RS485, CAN or Ethernet TC/IP with PowerPro Connect Module option. Command protocol is patterned to PMBus specification using a proprietary transaction protocol.

ARTESYN™
An Advanced Energy Company

iHP12 Electrical Specifications

Input Parameter	19" Rack 12 KW strapped as 1-phase 200/220/230/240 Vac Nominal (iHP12L1A)	Type: 19" Rack 12 KW strapped as 3-phase 200/208/240 Vac Nominal (iHP12L3A)	Type: 19" Rack 12 KW strapped as 3-phase 380/480 Vac Nominal (iHP12H3A)
Input range	180 Vac to 264 Vac (Nominal rating 200/220/230/240 Vac)	180 Vac to 264 Vac (Nominal rating 200/208/240 Vac)	342 Vac to 528 Vac (Nominal rating 380/480 Vac)
Number of phases	1-phase 3-wire total (2-phase and 1 protective earth ground)	3-phase (Wye or Delta) 4-wire total (3-phase and 1 protective earth ground)	
Frequency	47-63 Hz		
Phase detection	NA	Loss of phase will inhibit unit off. Housekeeping/comms must continue with phase loss.	
Max current/phase	75 A @ 180 Vac	44 A @ 180 Vac	23 A @ 342 Vac 19 A @ 432 Vac
Undervoltage detection	Nominal input locked on at turn-on. Undervoltage shutdown at 15% below nominal. Turn-on at 12% below nominal. Not to interfere with SEMI F47 specs.		
Current inrush	2.5 x Max input current		
Power factor	> 0.99 @ full load and nominal line	> 0.98 @ full load and nominal line	
Harmonic distortion	THD < 3.5%, PWHD < 22% (refer to EN 61000-3-12)		
Line interruption	Designed to meet SEMI F47-0706, 53, 58, S14 at nominal input voltages		
Input leakage current	< 1.25 mA		<2.5 mA
Power switch	Front panel power switch provided		
Input protection	Internal fuse (not user serviceable)		
Input overvoltage protection	Up to 115% of nominal input shall not damage unit		
Phase imbalance	NA	≤ 5%	≤ 5%
Rack parallel	Up to 6 racks (72 KW)		
Efficiency	> 91% @ 1P 240 Vac full load > 90% @ 1P 208 Vac/200 Vac full load	> 91% @ 3P 240 Vac full load > 90% @ 3P 208 Vac/200 Vac full load	> 90% @ 3P 380 Vac full load > 91% @ 3P 480 Vac full load
Standby voltage	5 V		
Standby regulation	4.75 - 5.25 V		
Standby max current	1 A		

EMC/Immunity

Parameter	All Models (Unless otherwise specified)
ESD	EN61000-4-2 (IEC1000-4-2)
Fast Transients	EN61000-4-4 (IEC1000-4-4)
Surge Immunity	EN61000-4-5 (IEC1000-4-5)
Conducted Immunity	EN61000-4-6 (IEC1000-4-6)
Radiated Immunity	EN61000-4-3 (IEC1000-4-3)
Power Frequency Magnetic Field	EN61000-4-8
Voltage Dips, Short Interruptions and Voltage Variations	EN 61000-4-34
Conducted Emission	EN55011, FCC CFR 47, Part 15, Subpart B
Radiated Emission	EN55011, FCC CFR 47, Part 15, Subpart B

Electromagnetic Compatibility/Input Transient

Category	Standard	Frequency	Level/Limits	PSU Performance Criteria[1]
Radiated Emissions[3]	EN 55011/CISPR11 FCC CFR 47, Part 15, Subpart B	30 M - 1 GHz 30 M - 1 GHz >1 GHz (see standard)	Class A Class A	5 dB Margin 5 dB Margin
Conducted Emissions[3]	EN 55011/CISPR11	150 k - 30 MHz	Class A	5 dB Margin
Power Line Harmonics[2]	EN 61000-3-12	See standard	See standard	
Voltage Fluctuations[2]	EN 61000-3-11	See standard	See standard	
Radiated Immunity	EN 61000-4-3	80 M - 2 GHz	10 V/meter	A
ESD	EN 61000-4-2		8 KV contact, 15 KV Air	A
Electrical Fast Transient	EN 61000-4-4		+/- 4 KV	A
Surge AC	EN 61000-4-5 IEEE C62.41		2 KV DM, 2 KV CM 2 KV DM, 2 KV CM 6 KV, CM & DM	A A Fail Safe
Conducted Susceptibility	EN 61000-4-6	150 KHz – 80 MHz	10 Vrms	A
Voltage Dips and Sags[2]	EN 61000-4-34 SEMI F47	>95% reduction for >30% reduction for >95% reduction for 20% reduction for 30% reduction for 50% reduction for **60% reduction for**	10 mS 500 mS 500 mS 5000 mS 500 mS 200 mS **200 mS**	A A C A A A **B**

Notes:
[1] Performance Criteria as defined by EN 300 386 V1.3.3
[2] Applies to AC power supplies only.
[3] Conducted and radiated emissions are measured using a typical set-up. In an actual end system, additional EMI filters may be required.

OUTPUT – General Specs

Parameter							
MODULE CODE	SL	SQ	SW	S8	S1	SA	S2
# Outputs	1	1	1	1	1	1	1
Nominal O/P (V)	12.0 V	24.0 V	48.0 V	80.0 V	125.0 V	200.0 V	250.0 V
Max Power (W)	2400 W	2880 W	3000 W	3000 W	3000 W	3000 W	3000 W
O/P Current Range (A)	0.0 A - 200 A	0.0 A - 120 A	0.0 A - 62.5 A	0.0 A - 37.5 A	0.0 A -24 A	0.0 A -15 A	0.0 A -12 A
Power Density (W/cu-in)	32.5	39.0	40.6	40.6	40.6	40.6	40.6
Efficiency (%)	93.5	93.5	93.5	93.5	93.5	93.5	93.5
Module Input Voltage	400 V						
Module Operating Temp	-0 °C to +65 °C; Baseplate Temp TBD						
Series Operation	250 V modules can be connected in series up to 800 V for Medical and 1000 V for ITE						
Parallel Operation	Up to 8 modules can be paralleled in 1 rack, with up to 6 racks connected in parallel. Single Wire Parallel connection will be provided as part of configuration						

OUTPUT – Module in Voltage Source Mode

Voltage Source							
MODULE CODE	SL	SQ	SW	S8	S1	SA	S2
Nominal Output (V)	12	24	48	80	125	200	250
Setting Range (V)	0.6 V - 14.4 V	1.2 V - 28.8 V	2.4 V - 57.6 V	4.0 V - 96.0 V	6.25 V - 150.0 V	10.0 V - 240.0 V	12.5 V - 300.0 V
Low Frequency RMS Ripple (mV)	24	48	96	160	250	400	500
Line Regulation (mV)	12	24	48	80	125	200	250
Load Regulation (mV)	24	48	96	160	250	400	500
P-P Ripple (mV)	60	120	240	400	625	1000	1250
Drift (Temp Stability)	±0.05% of Iout Rated over 8 hours, after 30 minute warm up, constant Line, Load and Temp						
Temp Coefficient (PPM/°C)	200						
Pgm Accuracy (mV)	Digital: 0.1% of Nominal Output Voltage; Analog: 1.0% of Nominal Output Voltage						
Pgm Resolution (mV)	SL=TBD; SQ=1; SW=2; S8=8; S1=6; S2=21						
Meas Accuracy (mV)	0.2% + 0.2% of Nominal Output Voltage						
Meas Resolution	SL=TBD; SQ=1; SW=2; S8=8; S1=6; S2=21						
Transient Response	Max 5.0% deviation from current set point must recover within 1mS for a 50% step load.						
Current Sense Method	Internal Shunt; External Shunt can be used for better temperature stability.						

OUTPUT – Module in Current Source Mode

Current Source - Programmable load compensation available for resistive and inductive loads; capacitive load applications; and LED drive applications							
MODULE CODE	SL	SQ	SW	S8	S1	SA	S2
Nominal Output (V)	12	24	48	80	125	200	250
Setting Range (A)	0.0 A - 200 A	0.0 A - 120 A	0.0 A - 62.5 A	0.0 A - 37.5 A	0.0 A - 24 A	0.0 A - 15 A	0.0 A - 12 A
RMS Ripple (mA)	200	120	62.5	37.5	24	15	12
Line Regulation (mA)	200	120	125	93.75	48	50	24
Load Regulation (mA)	800	480	250	150	96	56	48
P-P Ripple (mA)	N/A						
Drift (Temp Stability)	±0.05% of I_{out} Rated over 8 hours, after 30 minute warm up, constant Line, Load and Temp						
Temp Co-efficient (PPM/°C)	SL, SQ = 300 PPM; All other modules are 200 PPM. Temp Co-efficient at rack level is [Temp Co-efficient (module level)] + [4500 PPM of Iout-max]						
Pgm Accuracy (A)	0.7% digital, 1.3% analog of rated output max						
Pgm Resolution (mA)	79.2	26.4	13.2	10	5.2	2.6	2.6
Meas Accuracy	0.7% + 0.7% of Rated Output Max						
Meas Resolution	79.2	26.4	13.2	10	5.2	2.6	2.6
Transient Response	0-63% output current change in 7.5 mSec, residual value 1%, settling time 35 mSec						
Current Sense Method	Internal Shunt / External Shunt						

Environmental Specifications

Operating Conditions	ALL MODELS (Unless Otherwise Specified)
Operating Temperature	0 °C to +50 °C at 100% rated load.
Storage Temperature	-40 °C to +85 °C. For Liquid Cooled models, liquid must be drained before storage
Operating Humidity	20% - 90% non condensing
Storage Humidity	10% - 95% non condensing
Operating Altitude	Up to 9,842 feet above sea level (3,000 meters)
Storage Altitude	Up to 30,000 feet above sea level (9,144 meters)
Vibration	Operating Sinusoidal Vibration MIL-STD-810G Method 528 Procedure I (Type 1): NEBS Office Vibration Environment, Alternate Procedure Operating Random Vibration: IPC-9592B Class 1 Non-Operating Vibration (Packaged): IPC-9592B Class 1; MIL-STD-810G, Method 514.6, Procedure 1, Category 7, Table 514.6C-VII General Exposure
Shock	MIL-STD-810G Method 516.6 Procedures I, II, IV, VI
Shipping and Handling	NSTA for <100 lbs; MIL-STD-2073-1 >100 lbs
Cooling and Audible Noise	<65 dBA with 80% load @ 30 °C at nominal input voltage with Smart Fan algorithm to be optimized based on module and rack thermal sensors. When modules are inhibited via software control, the fan speed is reduced to idle and acoustic noise is <46 dBA. With modules off via front panel switch fans are at idle for 1 min, and off for 9 min.
Ingress Protection	Fan Cooled = IP20
Pollution Degree	2
RoHS Compliance	Yes

Module and Marking Detail

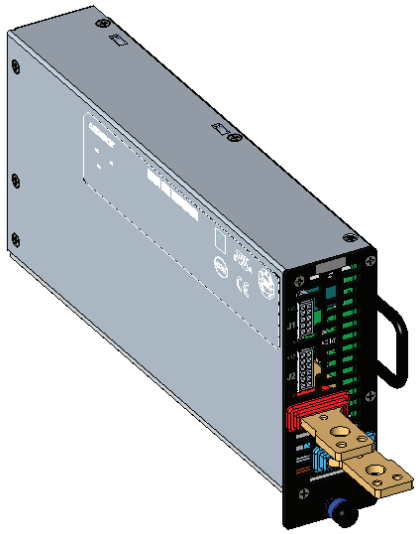

Standard Markings

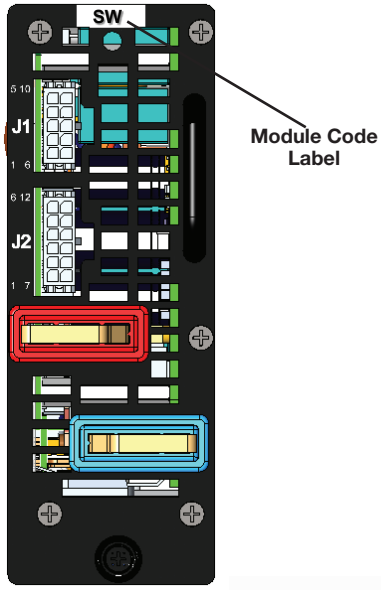

Ordering Information

CASE CODE		MODULE CODES (up to 8 modules)		PARALLEL/SERIES CASE CODE		MOD CODE
iHP**XYA-		XV-		-XX		-XXX
Case Decoder	**iHP**XYA**	**Module Decoder**	**XV**	**Case Code Decoder First Digit**	**Case Code Decoder Second Digit**	
** = Case Power		X = Output Type		0 = None	0 = None	
	12 = 12 KW 19" Rack 24 = 24 KW 19" Rack		S = Single	1 = Slot 1&2	P = Parallel	
X = Voltage Range		V = Nominal Voltage		2 = Slot 2&3	S = Series	
	L = Low Range*180-264		L = 12 V	3 = Slot 3&4	1 = Combo 2 P/S	
	H = High Range 342-528		Q = 24 V	4 = Slot 4&5	2 = Combo 2 S/P	
Y = Input Phase			W = 48 V	5 = Slot 5&6	3 = Combo 3 P/P/S	
	1 = Single Phase 3 = 3-Phase		8 = 80 V	6 = Slot 6&7	4 = Combo 3 P/S/P	
Z = Cooling			1 =125 V	7 = Slot 7&8	5 = Combo 3 P/S/S	
	A = Air Cooled		2 = 250 V	8 = Slot 1,2&3	6 = Combo 3 S/P/P	
				9 = Slot 1,2,3&4	7 = Combo 3 S/P/S	
				A = Slot 1,2,3,4&5	8 = Combo 3 S/S/P	
				B = Slot 1,2,3,4,5&6	9 = Combo 4 P/P/P/S	
				C = Slot 1,2,3,4,5,6&7	A = Combo 4 P/P/S/P	
				D = Slot 1,2,3,4,5,6,7&8	B = Combo 4 P/P/S/S	
				E = Slot 1&2; 3&4	C = Combo 4 P/S/P/P	
				F = Slot 1&2; 3&4; 5&6	D = Combo 4 P/S/P/S	
				G = Slot 1&2; 3&4; 5&6; 7&8	E = Combo 4 P/S/S/P	
				H = Slot 1,2&3; 4&5	F = Combo 4 P/S/S/S	
				J = Slot 1,2&3; 4&5; 6&7	G = Combo 4 S/P/P/P	
				K = Slot 1,2&3; 4,5&6	H = Combo 4 S/P/P/S	
				L = Slot 1,2&3; 4,5&6; 7&8	J = Combo 4 S/P/S/P	
				M = Slot 1,2,3&4; 5&6	K = Combo 4 S/P/S/S	
				N = Slot 1,2,3&4; 5&6; 7&8	L = Combo 4 S/S/P/P	
				P = Slot 1,2,3&4; 5,6&7	M = Combo 4 S/S/P/S	
				R = Slot 1,2,3&4; 5,6,7&8	N = Combo 4 S/S/S/P	
				S = Slot 1,2,3,4&5; 6&7		
				T = Slot 1,2,3,4&5; 6,7&8		
				U = Slot 1,2,3,4,5&6; 7&8		

*Lowest possible input for the 24 kW version is 187.5 Vac

MODEL NUMBER SHORTCUT

For repeated like modules in parallel or series, instead of listing all the same modules separated by a "-", you can simply list the module once and then follow by the number of times it repeats enclosed in parenthesis.

For example:
iHP24H3A-SW-SW-SW-SW-SW-SW-S8-S8-00

would become:
iHP24H3A-SW(6)-S8(2)-00

Case Specs - Outline Detail

Front Panel Standard Markings
(Standard for both 12 KW and 24 KW)

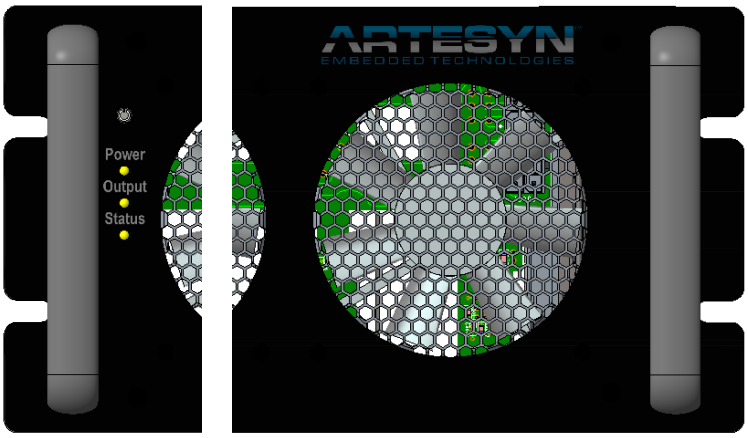

Input and Comms Standard Markings
(View of 24KW shown. Comms interface is horizontal on the 12KW). See mechanical drawings.

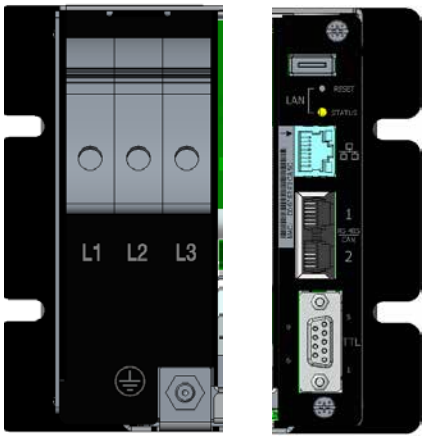

Module Specs - Outline Detail

Module J1 Signals			
Pin #	*Function*	*Function*	*Pin #*
5	4-20mA_IPROG	SYS_M_FAULT#	10
4	0-5VEXT_IPROG	SYS_M_ENABLE#	9
3	0-10VEXT_IPROG	SYS_RTN	8
2	0-5VEXT_VPROG	SYS_M_INHIBIT	7
1	0-10VEXT_VPROG	4-20mA_VPROG	6

Module J2 Signals			
Pin #	*Function*	*Function*	*Pin #*
6	Dummy Net	Dummy Net	12
5	IMON	VMON	11
4	D_RTN	ISHARE	10
3	EXT_ISENSE+	EXT_ISENSE-	9
2	D_RTN	V_SNS-	8
1	V_SNS+	D_RTN	7

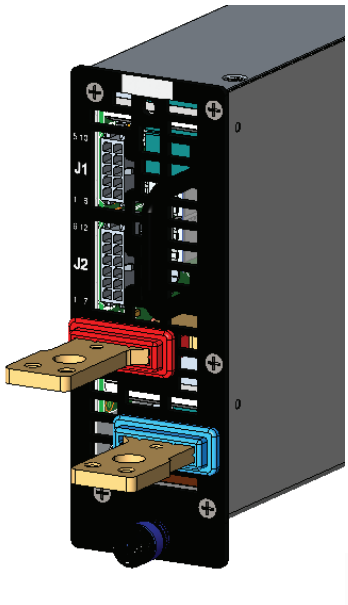

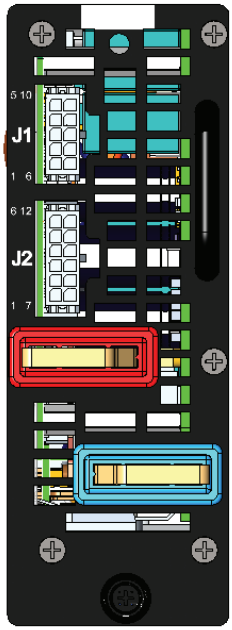

J1 mating housing Molex Micro-fit MPN: 43025-1000
J2 mating housing Molex Micro-fit MPN: 43025-1200
Crimp Terminal AWG 20-24
Crimp Terminal Molex MPN: 43030-0002

*i*HP24 Series - Mechanical Drawings

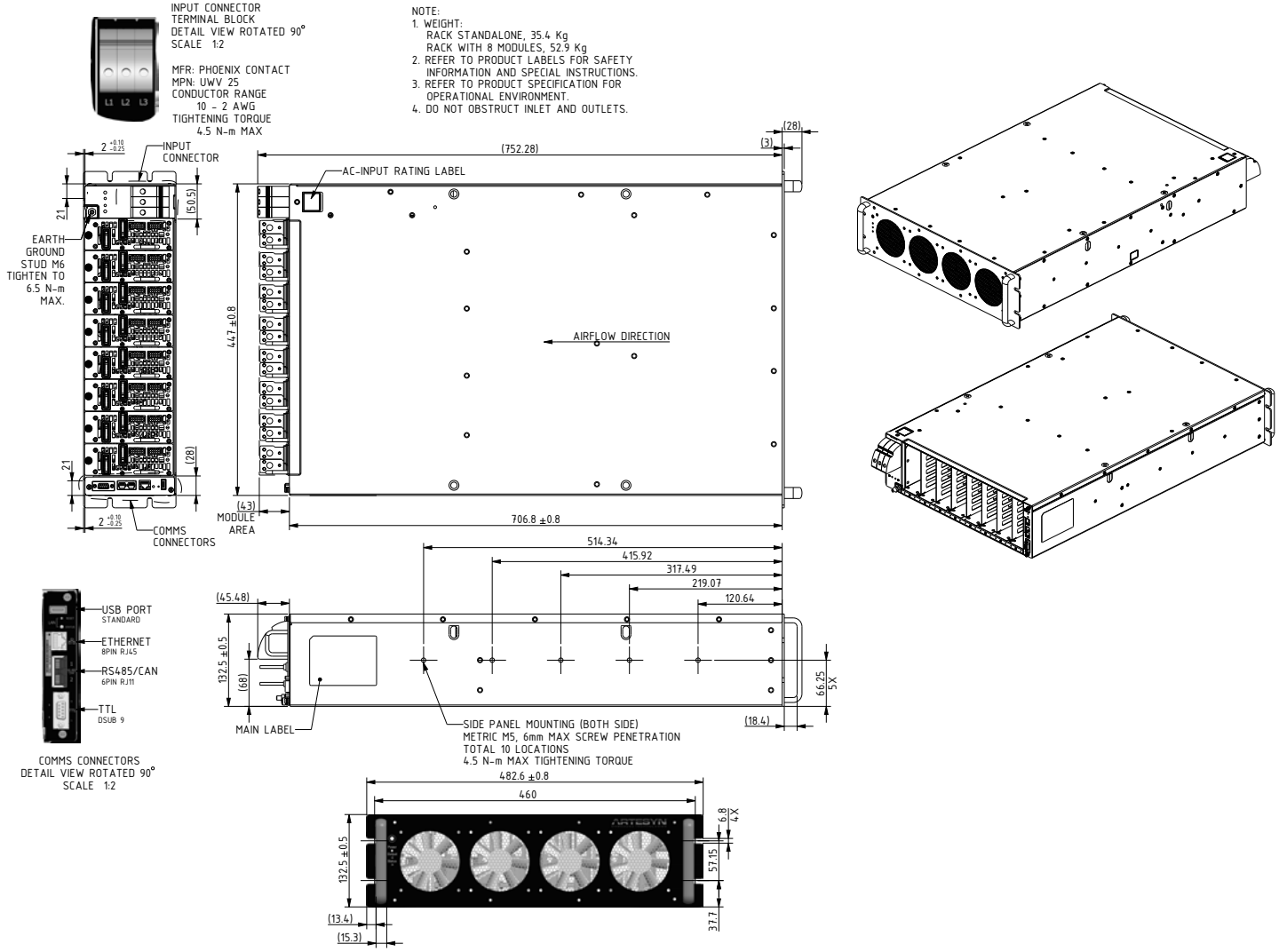

*i*HP12 Series - Mechanical Drawings

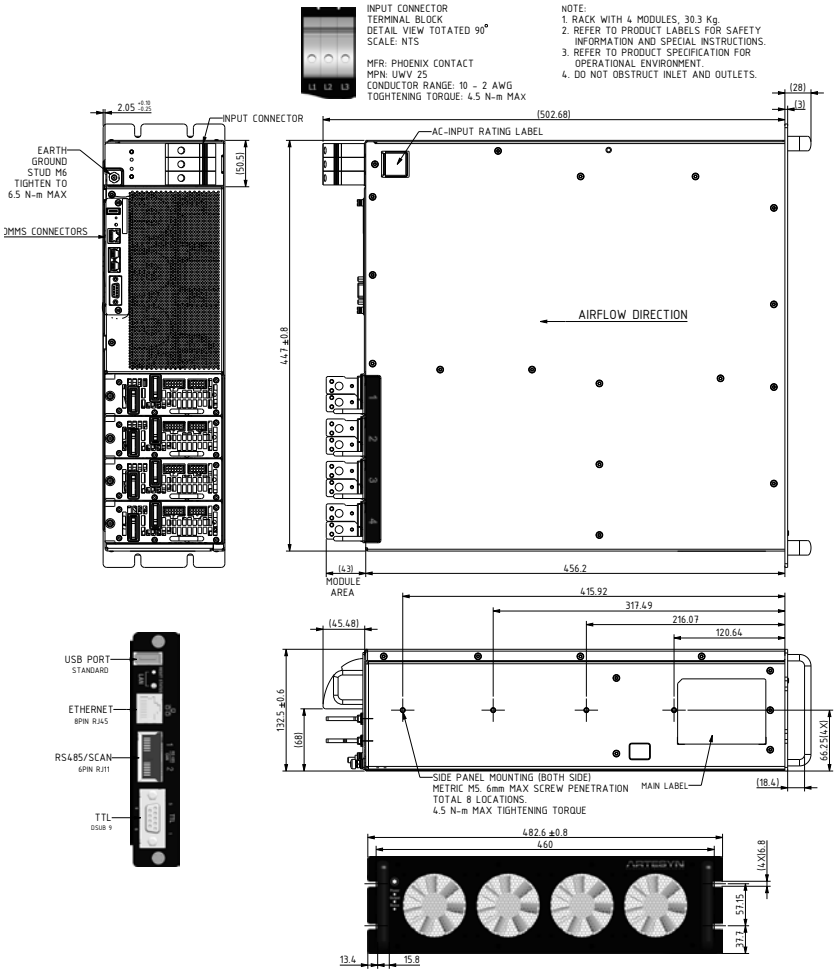

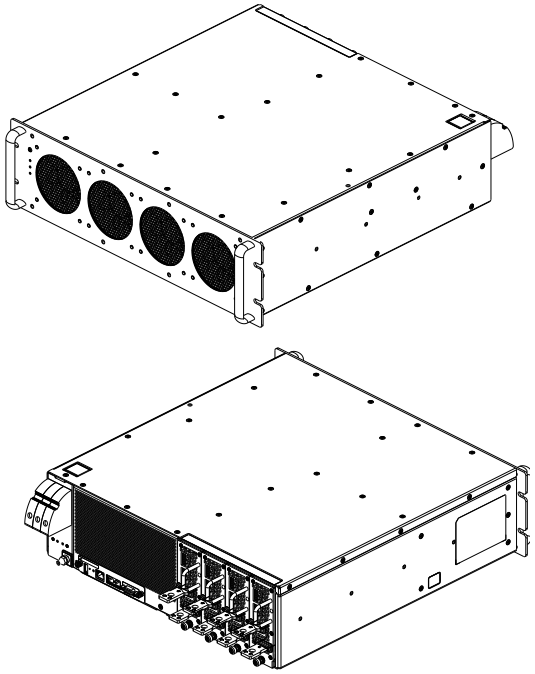

*i*HP Modules - Mechanical Drawings

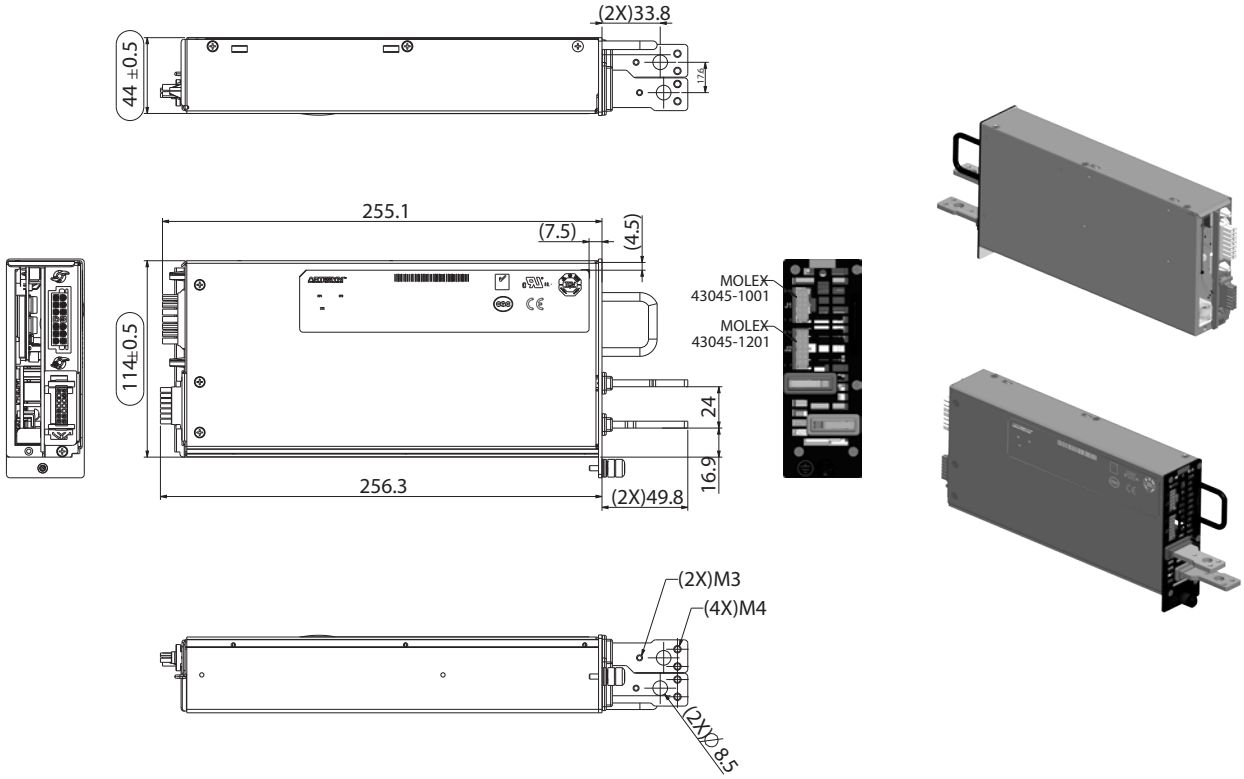

PowerPro Connect Module

POWERPRO

Part number:73-778-000

The PowerPro Connect Module (purchased separately) can provide standard Ethernet interface via the internet to a cloud- and dashboard-based user-configurable GUI.

WORLDWIDE OFFICES

Americas
2900 South Diablo Way
Suite B100
Tempe, AZ 85282, USA
+1 888 412 7832

Europe (UK)
Ground Floor Offices, Barberry House
4 Harbour Buildings, Waterfront West
Brierley Hill, West Midlands
DY5 1LN, UK
+44 (0) 1384 842 211

Asia (HK)
14/F, Lu Plaza
2 Wing Yip Street
Kwun Tong, Kowloon
Hong Kong
+852 2176 3333

ARTESYN™
An Advanced Energy Company
www.artesyn.com

Artesyn Embedded Technologies, Artesyn Embedded Power, Artesyn, and all Artesyn related logos are trademarks and service marks of Artesyn Embedded Technologies, Inc. All other names and logos referred to are trade names, trademarks, or registered trademarks of their respective owners. Specifications are subject to change without notice. © 2019 Artesyn Embedded Technologies, Inc. All rights reserved. For full legal terms and conditions, please visit www.artesyn.com/legal.

For more information: **www.artesyn.com**
For support: **productsupport.ep@artesyn.com**

iHP DS 26Dec2019

OCEAN CHIPS
Океан Электроники
Поставка электронных компонентов

Компания «Океан Электроники» предлагает заключение долгосрочных отношений при поставках импортных электронных компонентов на взаимовыгодных условиях!

Наши преимущества:

- Поставка оригинальных импортных электронных компонентов напрямую с производств Америки, Европы и Азии, а так же с крупнейших складов мира;
- Широкая линейка поставок активных и пассивных импортных электронных компонентов (более 30 млн. наименований);
- Поставка сложных, дефицитных, либо снятых с производства позиций;
- Оперативные сроки поставки под заказ (от 5 рабочих дней);
- Экспресс доставка в любую точку России;
- Помощь Конструкторского Отдела и консультации квалифицированных инженеров;
- Техническая поддержка проекта, помощь в подборе аналогов, поставка прототипов;
- Поставка электронных компонентов под контролем ВП;
- Система менеджмента качества сертифицирована по Международному стандарту ISO 9001;
- При необходимости вся продукция военного и аэрокосмического назначения проходит испытания и сертификацию в лаборатории (по согласованию с заказчиком);
- Поставка специализированных компонентов военного и аэрокосмического уровня качества (Xilinx, Altera, Analog Devices, Intersil, Interpoint, Microsemi, Actel, Aeroflex, Peregrine, VPT, Syfer, Eurofarad, Texas Instruments, MS Kennedy, Miteq, Cobham, E2V, MA-COM, Hittite, Mini-Circuits, General Dynamics и др.);

Компания «Океан Электроники» является официальным дистрибьютором и эксклюзивным представителем в России одного из крупнейших производителей разъемов военного и аэрокосмического назначения **«JONHON»**, а так же официальным дистрибьютором и эксклюзивным представителем в России производителя высокотехнологичных и надежных решений для передачи СВЧ сигналов **«FORSTAR»**.

AVIC JONHON

«JONHON» (основан в 1970 г.)

Разъемы специального, военного и аэрокосмического назначения:

(Применяются в военной, авиационной, аэрокосмической, морской, железнодорожной, горно- и нефтедобывающей отраслях промышленности)

«FORSTAR» (основан в 1998 г.)

ВЧ соединители, коаксиальные кабели, кабельные сборки и микроволновые компоненты:

(Применяются в телекоммуникациях гражданского и специального назначения, в средствах связи, РЛС, а так же военной, авиационной и аэрокосмической отраслях промышленности).

FORSTAR®

Телефон: 8 (812) 309-75-97 (многоканальный)
Факс: 8 (812) 320-03-32
Электронная почта: ocean@oceanchips.ru
Web: http://oceanchips.ru/
Адрес: 198099, г. Санкт-Петербург, ул. Калинина, д. 2, корп. 4, лит. А