Photoelectric Sensors
E3F2

Threaded Cylindrical Photoelectric Sensors with Built-in Amplifier for Use as an Optical Proximity Switch

- M18 DIN-sized cylindrical housing
- Housing materials: plastic, nickel plated brass and stainless steel
- Axial and radial types (with integrated 90°-optics)
- Enclosure rating IP67
- DC switching types with connectors for easy maintenance
- Full metal plug-in type
- Sensing distance separate types: 7 m, 10 m
- Retroreflective polarizing types: 2 m, 4 m
- Background suppression type: 10 cm
- Long detection distance (0.3 m, 1 m) with sensitivity adjuster for diffuse type
- Wide-beam characteristics (10 cm) for diffuse type
- Wide operating voltage range (10 to 30 VDC or 24 to 240 VAC)
- Short-circuit and reverse connection protection (DC switching type)
- UL and CSA approved (AC switching types)
- UL listed (DC switching types)

Ordering Information

■ DC-Switching Models

Housing Material: Plastic

Note: Shaded models are normally stocked.

Sensing method			Appearance	Connection method	Sensing distance	Model	
						PNP output	NPN output
Through-beam	Multi purpose		axial	pre-wired	7 m	**E3F2-7B4**	**E3F2-7C4**
				M12 connector		**E3F2-7B4-P1**	**E3F2-7C4-P1**
	- precision detection (*1) - test input			pre-wired	10 m	**E3F2-10B4**	**E3F2-10C4**
				M12 connector		**E3F2-10B4-P1**	**E3F2-10C4-P1**
Retro-reflective (incl. reflector E39-R1 or E39-R1S)	Non-polarizing (without MSR function)		axial	pre-wired	0.1 - 2 m(*2)	**E3F2-R2B4**	**E3F2-R2C4**
				M12 connector		**E3F2-R2B4-P1**	**E3F2-R2C4-P1**
	Polarizing (with MSR function)	Fixed sensitivity		pre-wired	0.1 - 4 m(*3)	**E3F2-R4B4F**	**E3F2-R4C4F**
				M12 connector		**E3F2-R4B4F-P1**	**E3F2-R4C4F-P1**
		Adjustable sensitivity		pre-wired		**E3F2-R4B4**	**E3F2-R4C4**
				M12 connector		**E3F2-R4B4-P1**	**E3F2-R4C4-P1**
	Polarizing (with MSR function)		radial	pre-wired	0.1 - 2 m(*2)	**E3F2-R2RB41**	**E3F2-R2RC41**
				M12 connector		**E3F2-R2RB41-P1**	**E3F2-R2RC41-P1**
Diffuse reflective	Fixed sensitivity Wide-beam characteristics		axial	pre-wired	0.1 m	**E3F2-DS10B4-N**	**E3F2-DS10C4-N**
				M12 connector		**E3F2-DS10B4-P1**	**E3F2-DS10C4-P1**
	Adjustable sensitivity			pre-wired	0.3 m	**E3F2-DS30B4**	**E3F2-DS30C4**
				M12 connector		**E3F2-DS30B4-P1**	**E3F2-DS30C4-P1**
				pre-wired	1 m	**E3F2-D1B4**	**E3F2-D1C4**
				M12 connector		**E3F2-D1B4-P1**	**E3F2-D1C4-P1**
	Adjustable sensitivity		radial	pre-wired	0.3 m	**E3F2-DS30B41**	**E3F2-DS30C41**
				M12 connector		**E3F2-DS30B41-P1**	**E3F2-DS30C41-P1**
Background suppression	Fixed sensing distance		axial	pre-wired	10 cm	**E3F2-LS10B4**	**E3F2-LS10C4**
				M12 connector		**E3F2-LS10B4-P1**	**E3F2-LS10C4-P1**

*1) with slit E39-ES18
*2) with reflector E39-R1
*3) with reflector E39-R1S

Note: Standard cable length is 2 m. Models provided with a 5 m long cable are available. When ordering, specify the cable length by adding the length of the cable (e.g. E3F2-R2RB4 2M or E3F2-R2RB4 5M). For other cable length please contact your OMRON sales representative.

■ Housing material: Metal (Nickel plated brass)

Note: Shaded models are normally stocked.

Sensing method			Appearance	Connection method	Sensing distance	Model	
						PNP output	NPN output
Through-beam	Multi purpose		axial	pre-wired	7 m	**E3F2-7B4-M**	**E3F2-7C4-M**
				M12 connector		**E3F2-7B4-M1-M**	**E3F2-7C4-M1-M**
	- precision detection - test input			pre-wired	10 m	**E3F2-10B4-M**	**E3F2-10C4-M**
				M12 connector		**E3F2-10B4-M1-M**	**E3F2-10C4-M1-M**
Retro-reflective (incl. reflector E39-R1)	Polarizing (with MSR function)	Fixed sensitivity	axial	pre-wired	0.1 - 2 m(*1)	**E3F2-R2RB4-M**	**E3F2-R2RC4-M**
				M12 connector		**E3F2-R2RB4-M1-M**	**E3F2-R2RC4-M1-M**
				pre-wired	0.1 - 4 m(*2)	**E3F2-R4B4F-M**	**E3F2-R4C4F-M**
				M12 connector		**E3F2-R4B4F-M1-M**	**E3F2-R4C4F-M1-M**
		Adjustable sensitivity		pre-wired		**E3F2-R4B4-M**	**E3F2-R4C4-M**
				M12 connector		**E3F2-R4B4-M1-M**	**E3F2-R4C4-M1-M**
	Polarizing (with MSR function)		radial	pre-wired	0.1 - 2 m(*1)	**E3F2-R2RB41-M**	**E3F2-R2RC41-M**
Diffuse reflective	Fixed sensing distance Wide-beam characteristics		axial	pre-wired	0.1 m	**E3F2-DS10B4-M**	**E3F2-DS10C4-M**
				M12 connector		**E3F2-DS10B4-M1-M**	**E3F2-DS10C4-M1-M**
	Adjustable sensing distance			pre-wired	0.3 m	**E3F2-DS30B4-M**	**E3F2-DS30C4-M**
				M12 connector		**E3F2-DS30B4-M1-M**	**E3F2-DS30C4-M1-M**
				pre-wired	1 m	**E3F2-D1B4-M**	**E3F2-D1C4-M**
				M12 connector		**E3F2-D1B4-M1-M**	**E3F2-D1C4-M1-M**
	Adjustable sensing distance		radial	pre-wired	0.3 m	**E3F2-DS30B41-M**	**E3F2-DS30C41-M**
				M12 connector		**E3F2-DS30B41-M1-M**	**E3F2-DS30C41-M1-M**
Background suppression	Fixed sensing distance		axial	pre-wired	10 cm	**E3F2-LS10B4-M**	**E3F2-LS10C4-M**
				M12 connector		**E3F2-LS10B4-M1-M**	**E3F2-LS10C4-M1-M**

*1) with reflector E39-R1
*2) with reflector E39-R1S

Note: Standard cable length is 2 m. Models provided with a 5 m long cable are available. When ordering, specify the cable length by adding the length of the cable (e.g. E3F2-R2RB4 2M or E3F2-R2RB4 5M). For other cable length please contact your OMRON sales representative.

■ Housing material: Metal (Stainless steel)

Note: Shaded models are normally stocked.

Sensing method		Appearance	Connection method	Sensing distance	Model	
					PNP output	NPN output
Through-beam		axial	pre-wired	7 m	**E3F2-7B4-S**	**E3F2-7C4-S**
			M12 connector		**E3F2-7B4-M1-S**	**E3F2-7C4-M1-S**
Retro-reflective (incl. reflector E39-R1)	Polarizing (with MSR function)	axial	pre-wired	0.1 - 2 m (with reflector E39-R1)	**E3F2-R2RB4-S**	**E3F2-R2RC4-S**
			M12 connector		**E3F2-R2RB4-M1-S**	**E3F2-R2RC4-M1-S**
Diffuse reflective	Fixed sensitivity Wide-beam characteristics	axial	pre-wired	0.1 m	**E3F2-DS10B4-S**	**E3F2-DS10C4-S**
			M12 connector		**E3F2-DS10B4-M1-S**	**E3F2-DS10C4-M1-S**
	Adjustable sensitivity		pre-wired	0.3 m	**E3F2-DS30B4-S**	**E3F2-DS30C4-S**
			M12 connector		**E3F2-DS30B4-M1-S**	**E3F2-DS30C4-M1-S**

Note: Standard cable length is 2 m. Models provided with a 5 m long cable are available. When ordering, specify the cable length by adding the length of the cable (e.g. E3F2-R2RB4-S 2M or E3F2-R2RB4-S 5M). For other cable length please contact your OMRON sales representative.

■ AC-Switching Models

Housing material: Plastic

Note: Shaded models are normally stocked.

Sensing method		Appearance	Connection method	Sensing distance	Model	
					Light-ON	Dark-ON
Through-beam		axial	pre-wired	3 m	**E3F2-3Z1**	**E3F2-3Z2**
Retro-reflective (incl. reflector E39-R1)	Non-polarizing (without MSR function)	axial	pre-wired	0.1 - 2 m (with reflector E39-R1)	**E3F2-R2Z1**	**E3F2-R2Z2**
Diffuse reflective	Fixed sensing distance Wide-beam characteristics	axial	pre-wired	0.1 m	**E3F2-DS10Z1-N**	**E3F2-DS10Z2-N**

Note: Standard cable length is 2 m. Models provided with a 5 m long cable are available. When ordering, specify the cable length by adding the length of the cable (e.g. E3F2-R2Z1 2M or E3F2-R2Z1 5M). For other cable length please contact your OMRON sales representative.

■ Accessories (Order Separately)

Note: Shaded models are normally stocked.

Name	Sensing distance (typical) [1.]	Model	Remark
Reflectors	0.1 - 3.7 m (axial) 0.1 - 2.4 m (radial)	**E39-R1**	60 x 40 mm (included in some models)
	0.1 - 4.3 m (axial)	**E39-R1S**	for E3F2-R4
	0.1 - 4.2 m (axial) 0.1 - 2.7 m (radial)	**E39-R7**	84 mm
	0.1 - 5.3 m (axial) 0.1 - 3.1 m (radial)	**E39-R8**	100 x 100 mm
	0.1 - 4.3 m (axial)	**E39-R40**	80 x 80 mm
Tape Reflectors		**E39-RSA**	35 x 10 mm
		E39-RSB	35 x 40 mm
		E39-RS3	80 x 70 mm
Lens Cap		**E39-F31**	
Mounting Bracket		**Y92E-B18**	screw mount
		Y92E-G18	quick access mounting
Slit		**E39-ES18**	for E3F2-10□ - precision detection

For detailed information about Accessories, refer to the main chapter “Accessories” at the end of the document.

Note: 1. Typical sensing distance corresponds to 80% of the max. sensing distance. For details, please refer to “Engineering Data”.

■ Sensor I/O Connectors

Note: Shaded models are normally stocked.

Cord	Shape	Cable type		Model
Standard	Straight	2 m	Four-wire type	**XS2F-D421-D80-A**
		5 m		**XS2F-D421-G80-A**
	L-shaped	2 m		**XS2F-D422-D80-A**
		5 m		**XS2F-D422-G80-A**
Vibration-proof robot cable	Straight	2 m		**XS2F-D421-D80-R**
		5 m		**XS2F-D421-G80-R**
	L-shaped	2 m		**XS2F-D422-D80-R**
		5 m		**XS2F-D422-G80-R**

Specifications

■ Ratings / Characteristics of DC Switching Models

Item	E3F2-7□	E3F2-10□	E3F2-R2□4-□	E3F2-R2R□	E3F2-R4□-□	E3F2-DS10□	E3F2-DS30□	E3F2-D1□4-□	E3F2-LS10□4-□
Sensing method	Through-beam		Retroreflective			Diffuse reflective			
	- multi purpose	- Precision detection [6.] - test input	Non-polarizing	Polarizing		Wide beam characteristic	Adjustable sensing distance		Background suppression
Power supply voltage	10 to 30 V DC	12 to 24 V DC	10 to 30 V DC						
Current consumption	50 mA max.		25 mA max.	30 mA max.		25 mA max.	30 mA max.		
Rated sensing distance [1.]	7 m	10 m	0.1 - 2 m (with reflector E39-R1)		0.1 - 4 m (with reflector E39-R1S)	0.1 m (5 x 5 cm white mat paper)	0.3 m (10 x 10 cm white mat paper)	1 m (30 x 30 cm white mat paper)	0.1 m (10 x 10 cm white mat paper)
Typical sensing distance for different reflector types (ref. to accessories) [2.]	–		E39-R1: 4.0 m E39-R7: 4.5 m E39-R8: 5.3 m	E39-R1: axial 3.7 m radial 2.4 m E39-R7: axial 4.2 m radial 2.7 m E39-R8: axial 5.3 m radial 3.1 m	E39-R1S: 4.3 m E39-R7: 4.8 m E39-R8: 5.6 m E39-R40: 4.3 m E39-RS3: 2 m	–			
Standard object	Opaque: 11 mm dia. min.		Opaque: 56 mm dia. min.			–			
Directional angle	3° to 20°					–			
Differential travel (hysteresis)	–					20% max.			5% max
Black/white error	–								3%
Response time	Operation and Reset: 2.5 ms max.				1 ms max	2.5 ms max.		1 ms max.	
Control output	Transistor (open collector), load current: 100 mA max. (residual voltage: 2 V max.)								
Power reset time	50 ms				100 ms max.	50 ms		100 ms	
Ambient illumination	Incandescent lamp: 3000 lx max. / Sunlight: 10000 lx max.								
Ambient temperature	Operating: -25 to 55 °C / Storage: -30 to 70 °C (with no icing or condensation)								
Ambient humidity	Operating: 35% to 85% / Storage: 35% to 95% (without condensation)								
Insulation resistance	20 MΩ min. at 500 V DC between energized parts and case								
Dielectric strength	1000 VAC max., 50 / 60 Hz for 1 min between energized parts and case								
Vibration resistance	10 to 55 Hz, 1.5 mm double amplitude for 2 hrs each direction (X, Y, Z)								
Shock resistance	Destruction: 500 m/s² each direction (X, Y, Z)								
Enclosure ratings	IP67 [3.]; NEMA 1, 2, 4								
Light source	Infrared LED (880 nm/850 nm)			Red LED (660 nm)		Infrared LED (880 nm)			Red LED (660 nm)
Indicators	Light incident / power indicator for light source (red)	Output (orange) / light emission (red)	Light incident / power indicator for light source (red)		Light incident (red) / stability (green)	Light incident / power indicator for light source (red)		Light incident (red) / stability (green)	Output indicator (orange) / stability (green)
Sensitivity adjustment	Fixed				Fixed / Adjustable	Fixed	Adjustable		Fixed
Connection method	2 m, 5 m pre-wired cable (PVC, dia. 4 mm (18 / 0.12) [4.]) or M12-connector								
Test Input	–	[7.]	–						
Operation mode	Light-ON or Dark-ON selectable by wiring								
Weight (approx.)									
Plastic case, pre-wired (2 m)	120 g		60 g						
Plastic case, connector	40 g		20 g						
Metal case, pre-wired (2 m)	180 g		90 g						
Metal case, connector	120 g		50 g						
Circuit protection	Output short-circuit and power supply reverse polarity								
Housing materials	Plastic (case: ABS; lens: PMMA)								
	Nickel brass	Nickel brass	–	Nickel brass	Nickel brass	Nickel brass	Nickel brass	Nickel brass	Nickel brass
	Stainless steel [5.]	–	–	Stainless steel [5.]	–	Stainless steel [5.]	Stainless steel [5.]	–	–

Note: 1. For stable sensing distance in detail, please refer to “Engineering Data”

2. Typical sensing distance corresponds to 80% of the max. sensing distance.

3. The enclosure rating IP67 of OMRON internal standards correspond to stricter test requirements than the standard IEC 60529 (refer to chapter “Precautions”)

4. For other cable materials (e.g. PUR) please contact your OMRON sales representative.

5. Material-specification for stainless steel housing case: 1.4305 (W.-No.), 303 (AISI), 2346 (SS). For other stainless steel materials please contact your OMRON sales representative.

6. with slit E39-ES18

7. PNP models -B4: V_{CC} to V_{CC} -2.5 V: Emitting OFF (Source current: 3 mA max.) / Open or 0 to 2.5 V: Emitting ON (Leakage current: 0.1 mA max.)
NPN models -C4: 0 to 2.5 V: Emitting OFF (Source current: 3 mA max.) / Open or Vcc to Vcc -2.5 V: Emitting ON (Leakage current: 0.1 mA max.)

■ Ratings / Characteristics of AC Switching Models

Item	E3F2-3Z1 E3F2-3Z2	E3F2-R2Z1 E3F2-R2Z2	E3F2-DS10Z1 E3F2-DS10Z2
Sensing method	Through-beam	Non-polarizing Retroreflective	Diffuse reflective (wide-beam characteristic)
Power supply voltage	24 to 240 VAC ±10%, 50 / 60 Hz		
Current consumption	10 mA max.	5 mA max.	
Rated sensing distance[1.]	3 m	0.1 - 2 m (with reflector E39-R1)	0.1 m (5 x 5 cm white mat paper)
Typical sensing distance for different reflector types [2.]	–	E39-R1: 3,4 m E39-R7: 3,9 m E39-R8: 5,2 m	–
Detectable object	Opaque object: 11 mm min.	Opaque object: 56 mm min.	Opaque objects
Directional angle	3° to 20°		–
Differential travel	–		20% max.
Response time	30 ms max.		
Control output	AC solid state (SCR) 200 mA max.; residual voltage: 5 V max. at 200 mA		
Power reset time	100 ms		
Ambient illumination	Incandescent lamp: 3000 lx max. Sunlight: 10000 lx max.		
Ambient temperature	Operating: -25 to 55 °C / Storage: -30 to 70 °C (with no icing or condensation)		
Ambient humidity	Operating: 35% to 85% / Storage: 35% to 95% (without condensation)		
Insulation resistance	20 MΩ min. at 500 V DC between energized parts and case		
Dielectric strength	1500 VAC, 50 / 60 Hz for 1 min between energized parts and case		
Vibration resistance	10 to 55 Hz, 1.5 mm double amplitude for 2 hrs each direction (X, Y, Z)		
Shock resistance	500 m/sqr (approx. 50 g) for each direction (X, Y, Z)		
Enclosure rating	IP67 [3.]; NEMA 1, 2, 4		
Light source	Infrared LED (880 nm)		
Indicators	Light incident/power indicator for light source (red)		
Sensitivity adjustment	Fixed		
Connection method	2 m, 5 m pre-wired cable (PVC dia. 4 mm (14 / 0.15))		
Operation mode	Light-ON or Dark-ON (fixed)		
Circuit protection	None		
Weight (approx.)	110 g (pre-wired 2 m cable)		
Housing materials	Plastic (case: ABS; lens: PMMA)		

Note: 1. For stable sensing distance in detail, please refer to “Engineering Data”

2. Typical sensing distance corresponds to 80% of the max. sensing distance.

3. The enclosure rating IP67 of OMRON internal standards correspond to stricter test requirements than the standard IEC 60529 (refer to chapter “Precautions”)

Engineering Data (Typical)

■ Operating Range (typical)

Through-beam Models (axial)
E3F2-7□4-□

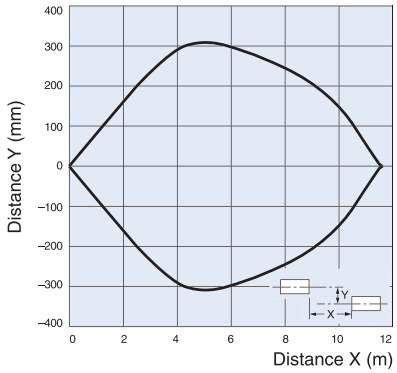

Through-beam Models (axial)
E3F2-3Z□

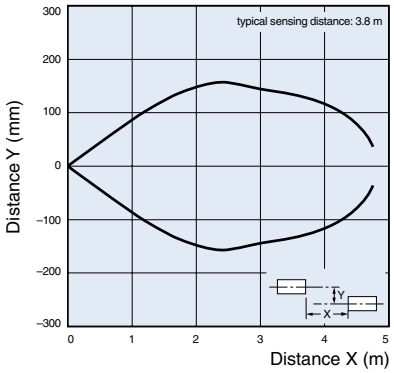

Through-beam Models (axial)
E3F2-10□

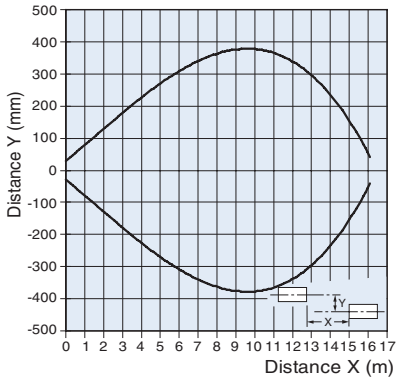

Retroreflective Models (axial)
E3F2-R2□4-□ (non polarizing)
and reflectors

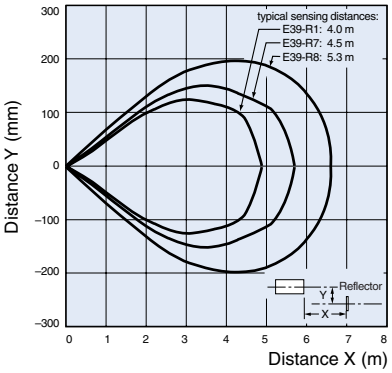

Retroreflective Models (axial)
E3F2-R2Z□ (non polarizing)
and reflectors

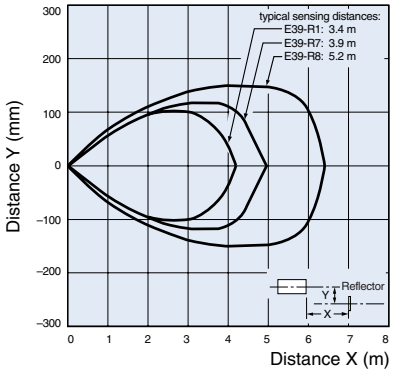

Retroreflective Models (axial)
E3F2-R2R□4-□ (polarizing)
and reflectors

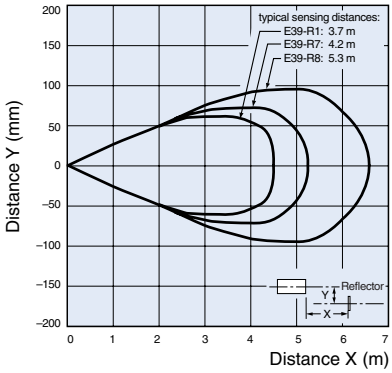

Retro-reflective Models (axial)
E3F2-R4□4□-□ (polarizing)

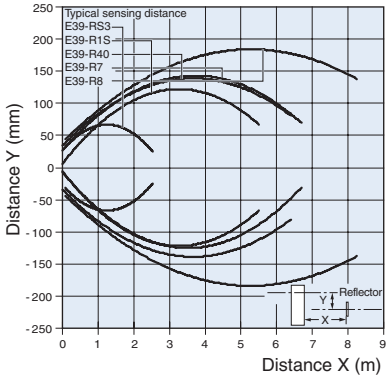

Retroreflective Models (radial)
E3F2-R2R□41-□ (polarizing)
and reflectors

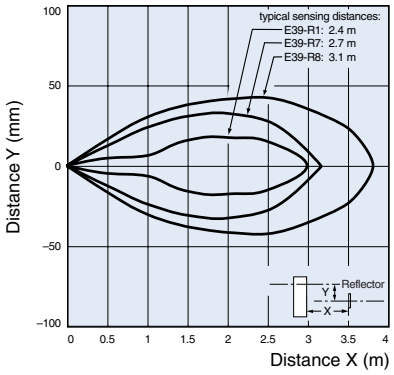

Diffuse reflective Models (axial)
E3F2-DS10□4-□ (wide-beam type)

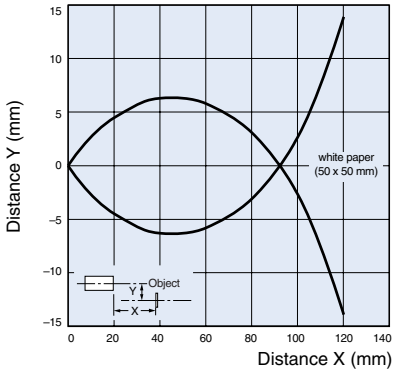

Diffuse reflective Models (axial)
E3F2-DS10Z-□ (wide-beam type)

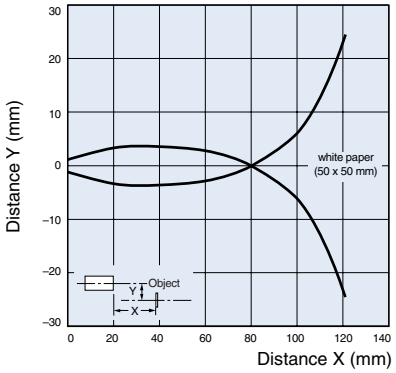

Diffuse reflective Models (axial)
E3F2-DS30□4-□

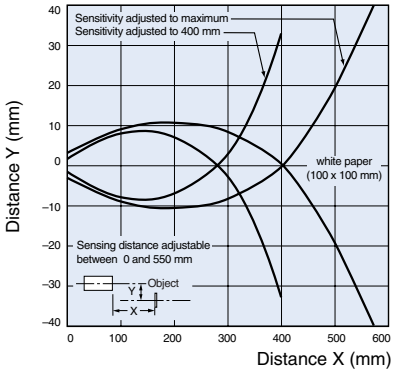

Diffuse reflective Models (radial)
E3F2-DS30□41-□

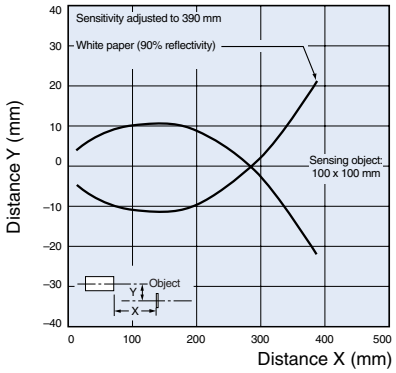

Diffuse reflective Models (axial)
E3F2-D1□4-□

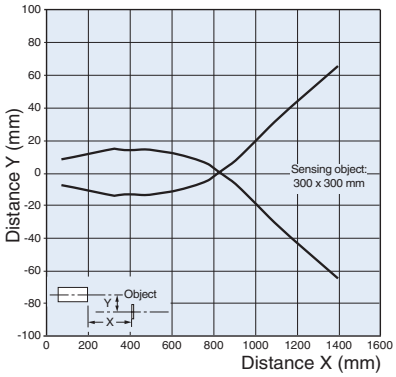

■ Excess Gain Ratio vs. Distance (typical)

Through-beam Models (axial)
E3F2-7□4-□

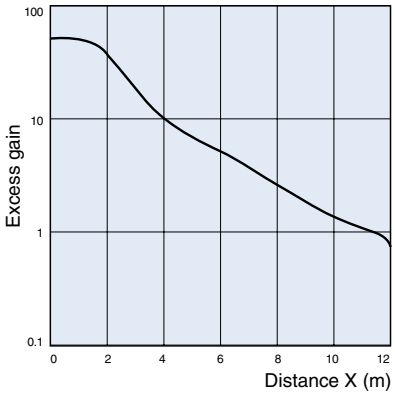

Through-beam Models (axial)
E3F2-3Z□

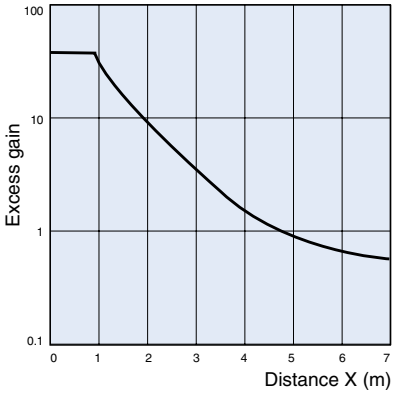

Through-beam Models (axial)
E3F2-10□

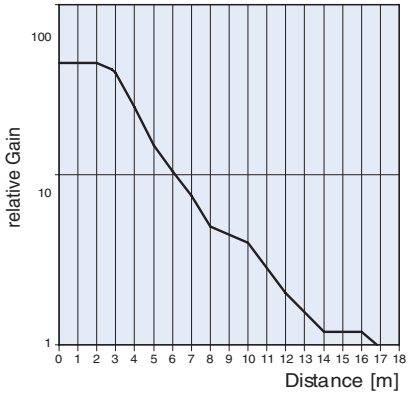

Retroreflective Models (axial)
E3F2-R2□4-□ (non polarizing)
and reflectors

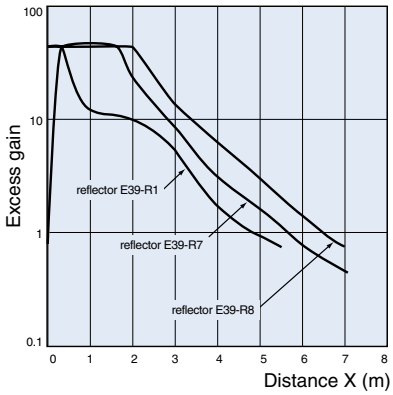

Retroreflective Models (axial)
E3F2-R2Z□ (non polarizing)
and reflectors

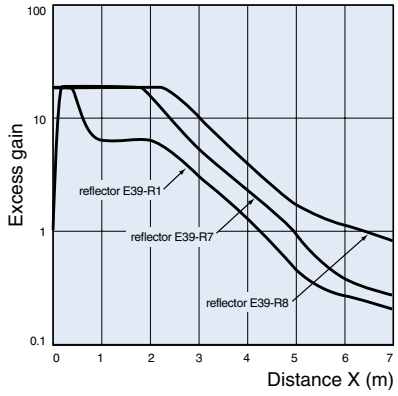

Retroreflective Models (axial)
E3F2-R2R□4-□ (polarizing)
and reflectors

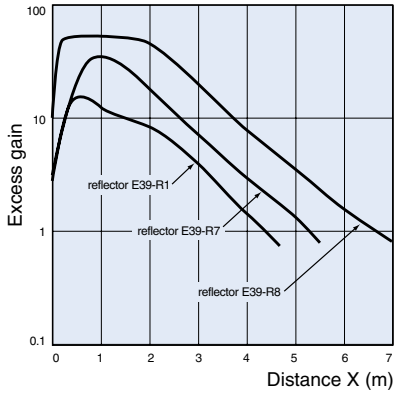

Retroreflective Models (axial)
E3F2-R4□4□-□

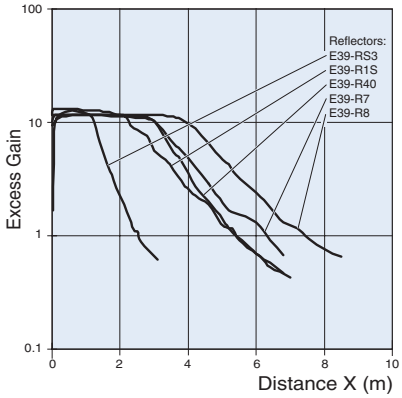

Retroreflective Models (radial)
E3F2-R2R□41-□ (polarizing)
and reflectors

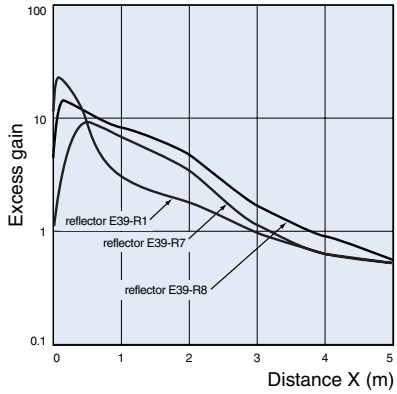

Diffuse reflective Models (axial)
E3F2-DS10□4-□ (wide-beam type)

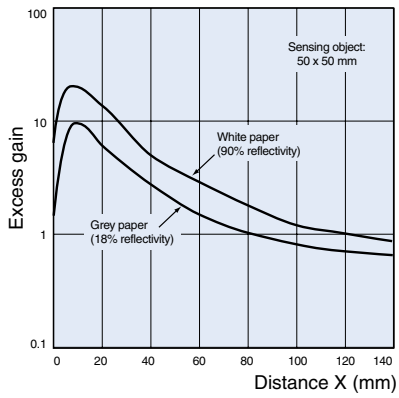

Diffuse reflective Models (axial)
E3F2-DS10Z-□ (wide-beam type)

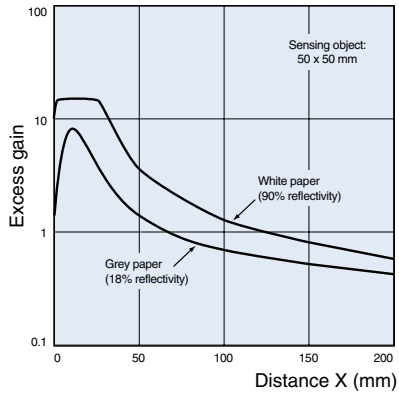

Diffuse reflective Models (axial)
E3F2-DS30□4-□

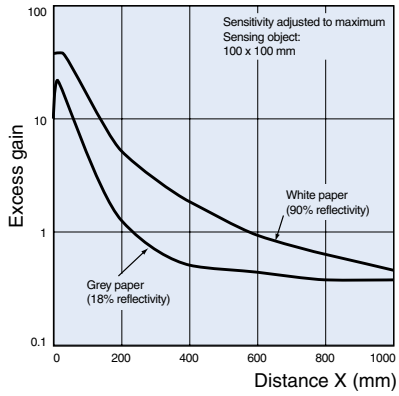

Diffuse reflective Models (radial)
E3F2-DS30□41-□

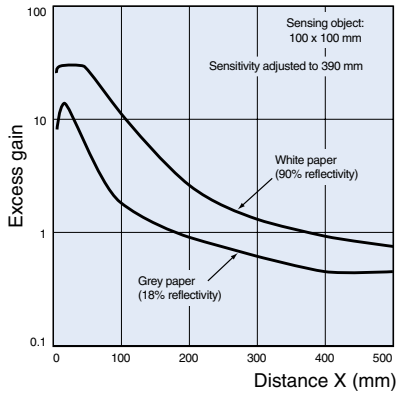

Diffuse reflective Models (axial)
E3F2-D1□4-□

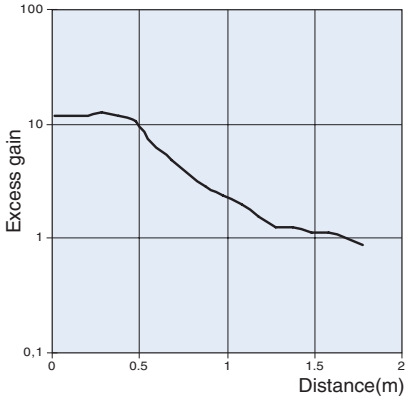

■ Light spot vs. sensing distance

Background suppression Models
E3F2-LS□

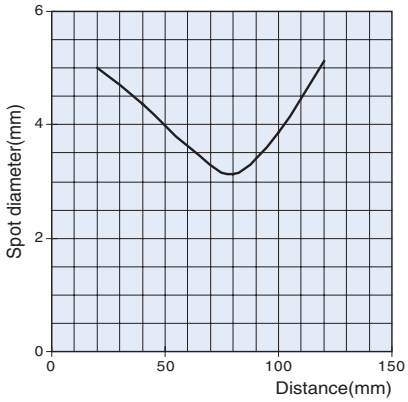

■ Incline (left and right)

Background suppression Models
E3F2-LS□

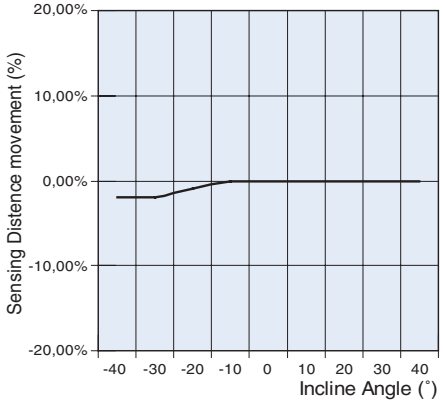

■ Incline (up and down)

Background suppression Models
E3F2-LS□

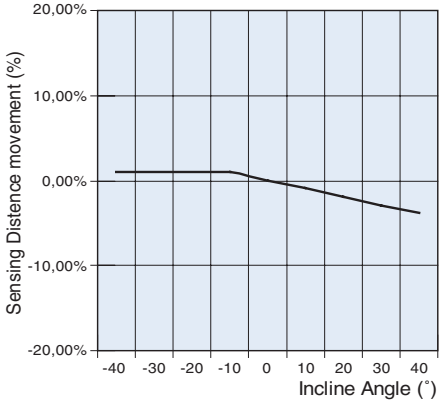

■ Object material vs. sensing distance

Background suppression Models
E3F2-LS□

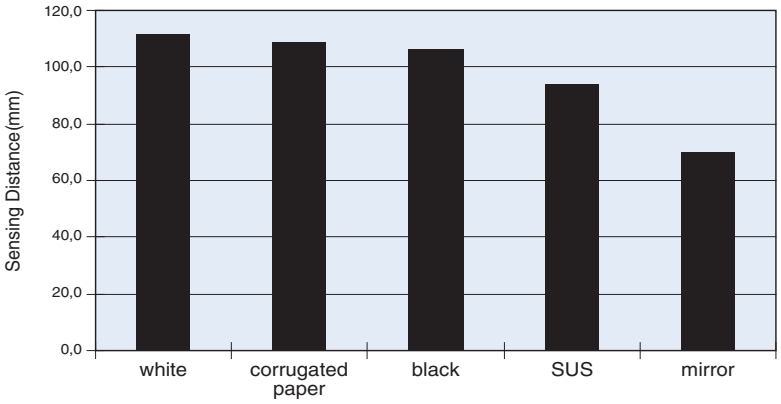

Operation

■ Output Circuits

Structure of Sensor I/O Connector

Classification	Wire color	Connector pin No.	Use
DC	Brown	①	Power supply (+V)
	White	②	Mode selection Lon/Don
	Blue	③	Power supply (0 V)
	Black	④	Output

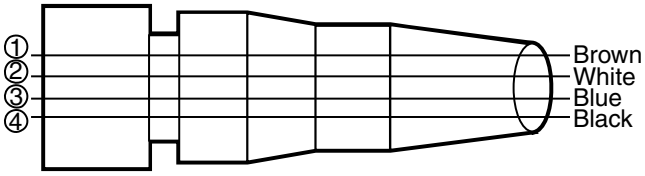

XS2F-D42□-D80-□
XS2F-G42□-G80-□

■ PNP Output

Model	Output transistor status	Timing chart	Connection method	Output circuit
E3F2-□B4-□ (except for E3F2-10B4-□ and E3F2-LS10B4-□)	–	–	–	Through-beam emitter 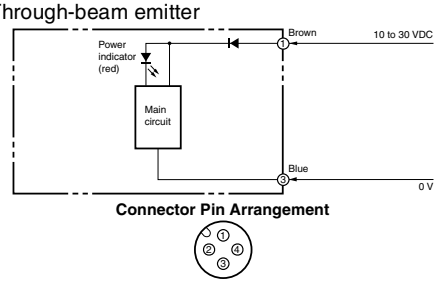
	ON when light is incident. (Light-ON)	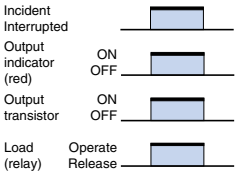	Connect the pink (Pin ②) and brown (Pin ①) cords or open the pink cord (Pin ②).	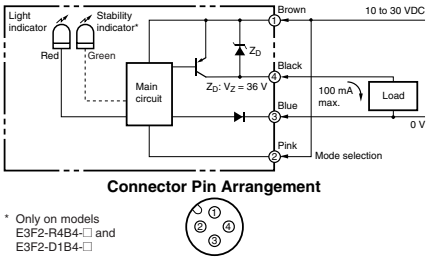
	ON when light is interrupted. (Dark-ON)	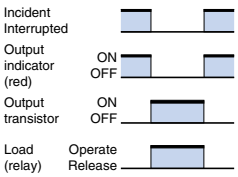	Connect the pink (Pin ②) and blue (Pin ③) cords.	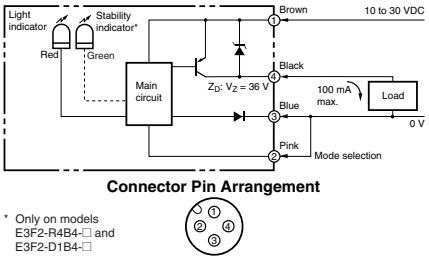

Model	Output transistor status	Timing chart	Connection method	Output circuit
E3F2-10B4-□	–	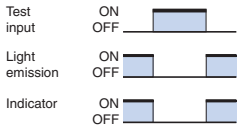	–	Through-beam emitter 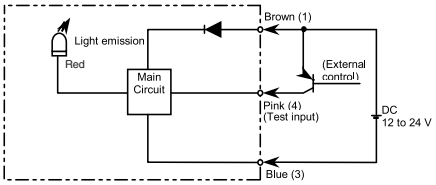
	ON when light is incident. (Light-ON)	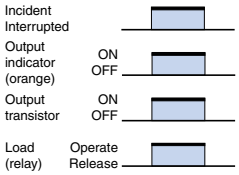	Connect the pink (Pin ②) and brown (Pin ①) cords or open the pink cord (Pin ②).	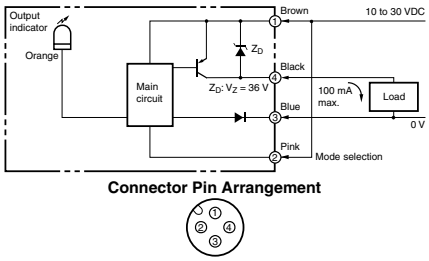
	ON when light is interrupted. (Dark-ON)	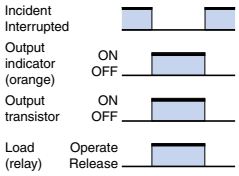	Connect the pink (Pin ②) and blue (Pin ③) cords.	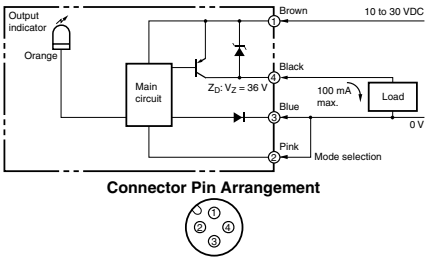
E3F2-LS10B4-□	ON when light is incident. (Light-ON)	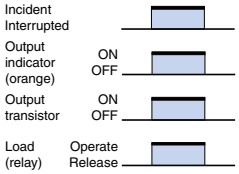	Connect the pink (Pin ②) and brown (Pin ①) cords or open the pink cord (Pin ②).	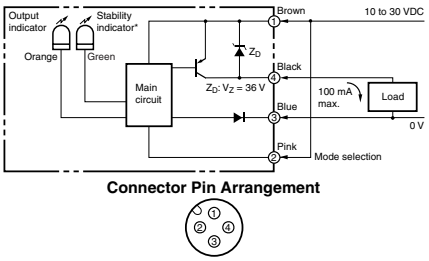
	ON when light is interrupted. (Dark-ON)	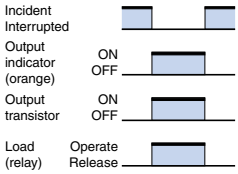	Connect the pink (Pin ②) and blue (Pin ③) cords.	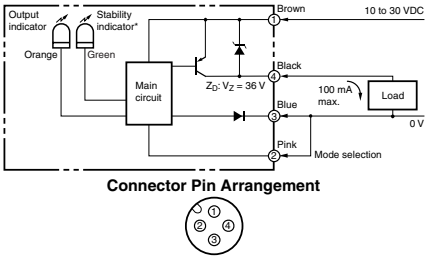

Note: Terminal numbers for connector type.

■ NPN Output

Model	Output transistor status	Timing chart	Connection method	Output circuit
E3F2-□C4-□ (except for E3F2-10C4-□ and E3F2-LS10C4-□)	–		–	Through-beam emitter 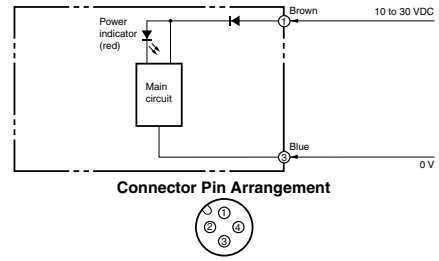
	ON when light is incident. (Light-ON)	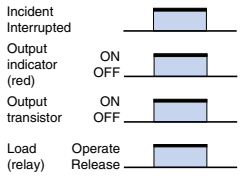	Connect the pink (Pin ②) and brown (Pin ①) cords or open the pink cord (Pin ②).	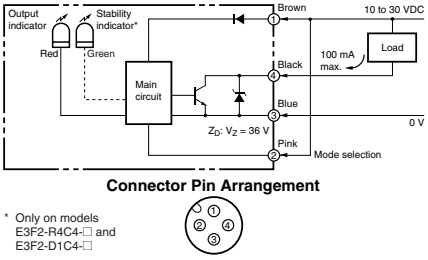
	ON when light is interrupted. (Dark-ON)	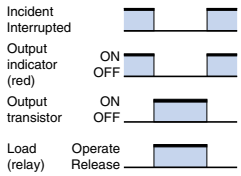	Connect the pink (Pin ②) and blue (Pin ③) cords.	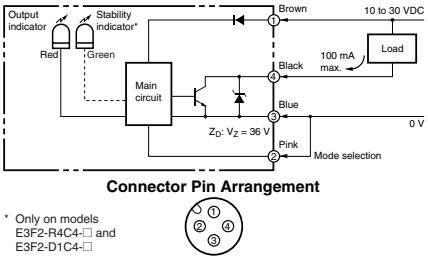
E3F2-10C4-□	–	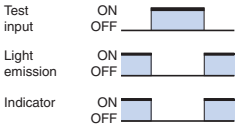	–	Through-beam emitter 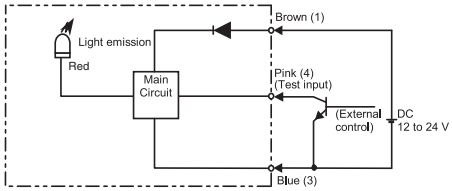
	ON when light is incident. (Light-ON)	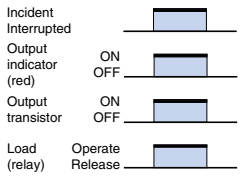	Connect the pink (Pin ②) and brown (Pin ①) cords or open the pink cord (Pin ②).	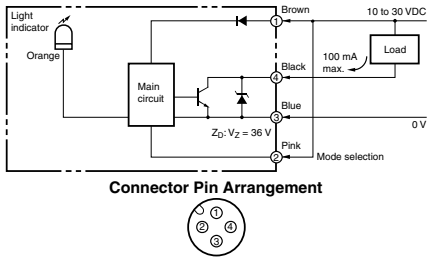
	ON when light is interrupted. (Dark-ON)	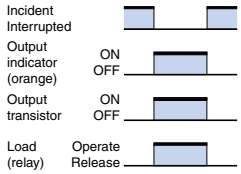	Connect the pink (Pin ②) and blue (Pin ③) cords.	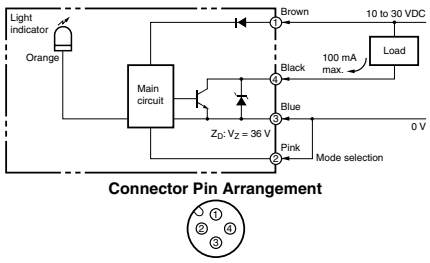

Model	Output transistor status	Timing chart	Connection method	Output circuit
E3F2-LS10C4-□	ON when light is incident. (Light-ON)	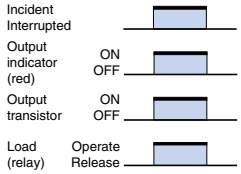	Connect the pink (Pin ②) and brown (Pin ①) cords or open the pink cord (Pin ②).	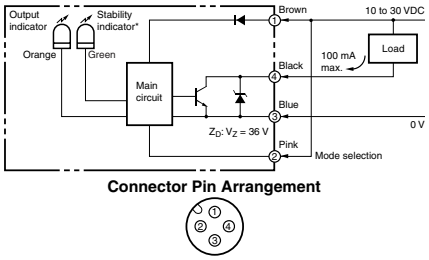
	ON when light is interrupted. (Dark-ON)	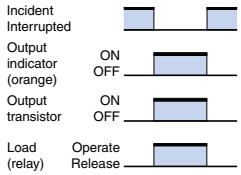	Connect the pink (Pin ②) and blue (Pin ③) cords.	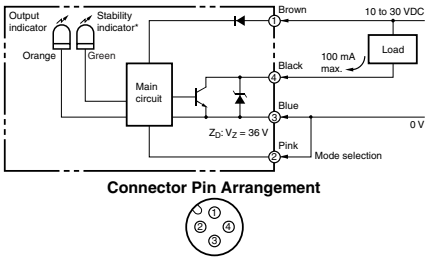

Note: Terminal numbers for connector type.

■ AC Output

Model	Output transistor status	Timing chart	Connection method	Output circuit
E3F2-3LZ	–	–	–	Through-beam emitter 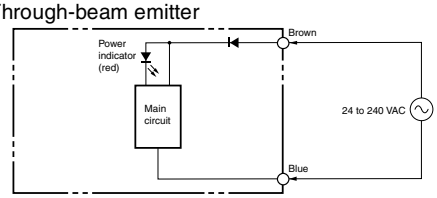
E3F2-3Z1 E3F2-R2Z1 E3F2-DS10Z1-N	ON when light is incident. (Light-ON)	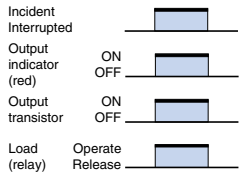	–	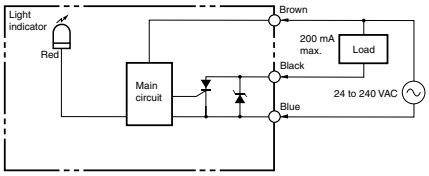
E3F2-3Z2 E3F2-R2Z2 E3F2-DS10Z2-N	ON when light is interrupted. (Dark-ON)	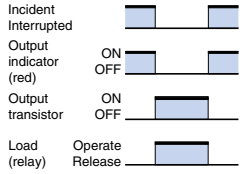	–	

Dimensions Note: All units are in millimeters unless otherwise indicated

■ DC-Switching Models, plastic, axial type

Cable type	Connector type
Without potentiometer	
E3F2-7□ **E3F2-10□** **E3F2-R2□4** **E3F2-DS10□4-N** **E3F2-LS10□4** **E3F2-R4□4F** 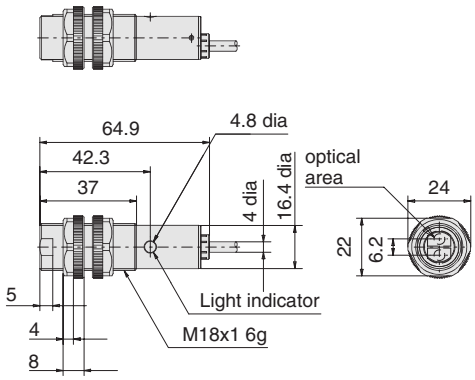	**E3F2-7□-P1** **E3F2-10□ –P1** **E3F2-R2□4-P1** **E3F2-DS10□4-P1** **E3F2-LS10□4-P1** **E3F2-R4□4F-P1** 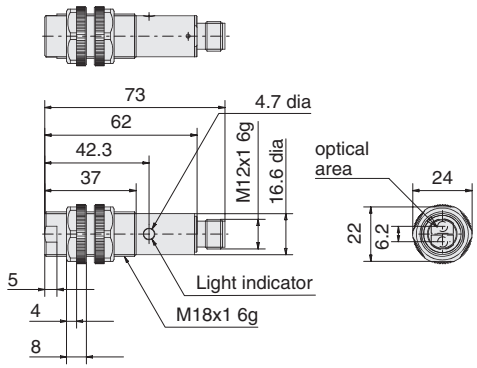
With potentiometer	
E3F2-DS30□4 **E3F2-D1□4** 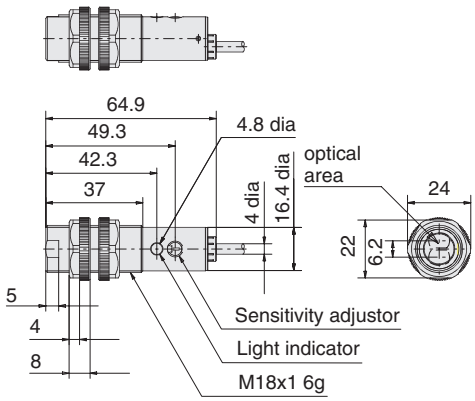	**E3F2-DS30□4-P1** **E3F2-D1□4-P1** 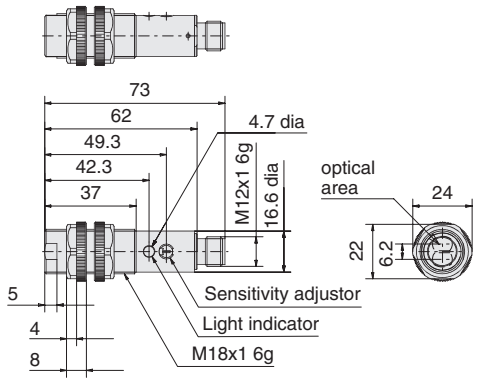

■ DC-Switching Models, plastic, radial type

Cable type	Connector type
Without potentiometer	
E3F2-R2R□41 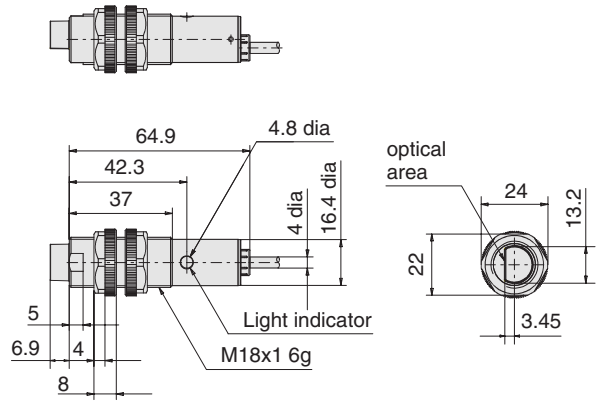	**E3F2-R2R□41-P1** 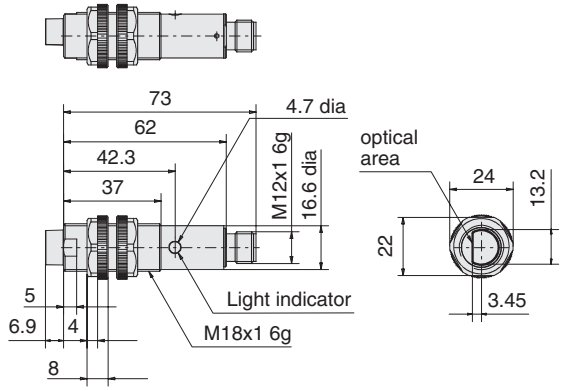
With potentiometer	
E3F2-DS30□41 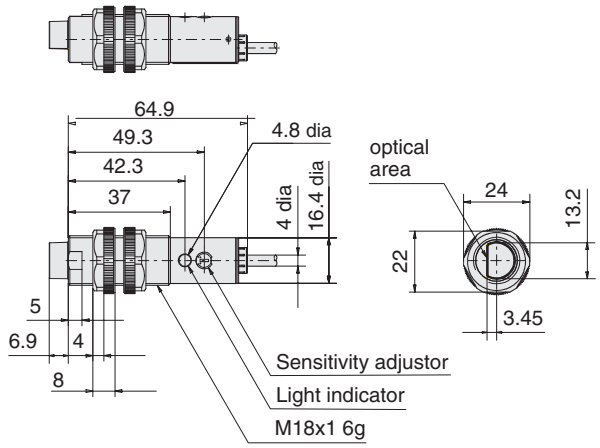	**E3F2-DS30□41-P1** 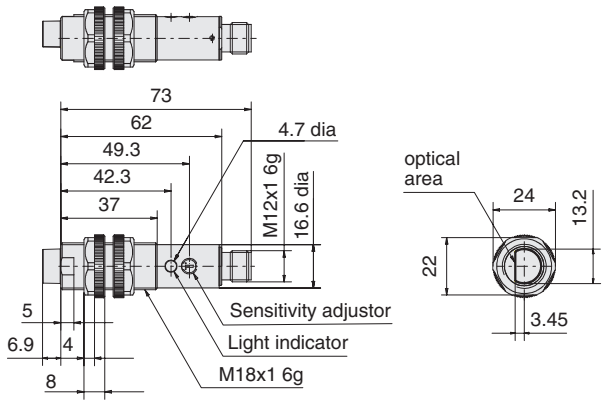

■ DC-Switching Models, metal (brass and stainless steel), axial type

Cable type	Connector type
Without potentiometer	
E3F2-7□-M **E3F2-7□-S** **E3F2-10□-M** **E3F2-R2R□4-M** **E3F2-R2R□4-S** **E3F2-DS10□4-M** **E3F2-DS10□4-S** **E3F2-LS10□4-M** **E3F2-R4□4F-M** 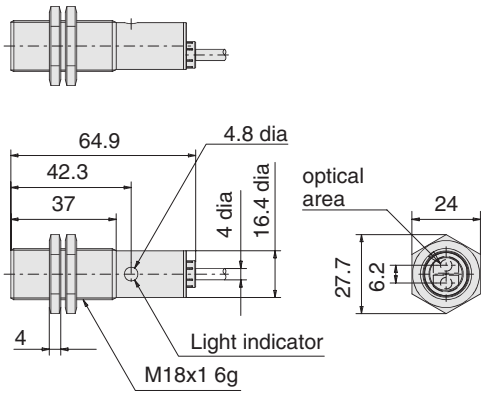 	**E3F2-7□-M1-M** **E3F2-7□-M1-S** **E3F2-10□-M1-M** **E3F2-R2R□4-M1-M** **E3F2-R2R□4-M1-S** **E3F2-DS10□4-M1-M** **E3F2-DS10□4-M1-S** **E3F2-LS10□4-M1-M** **E3F2-R4□4F-M1-M** 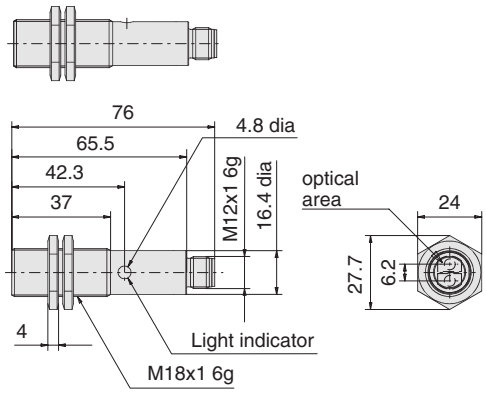
With potentiometer	
E3F2-DS30□4-M **E3F2-DS30□4-S** **E3F2-R4□4-M** **E3F2-D1□4-M** 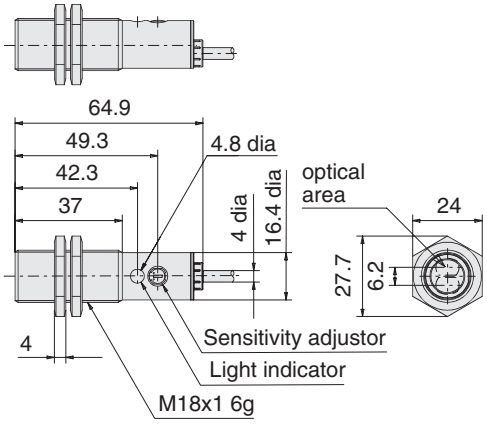 	**E3F2-DS30□4-M1-M** **E3F2-DS30□4-M1-S** **E3F2-R4□4-M1-M** **E3F2-D1□4-M1-M** 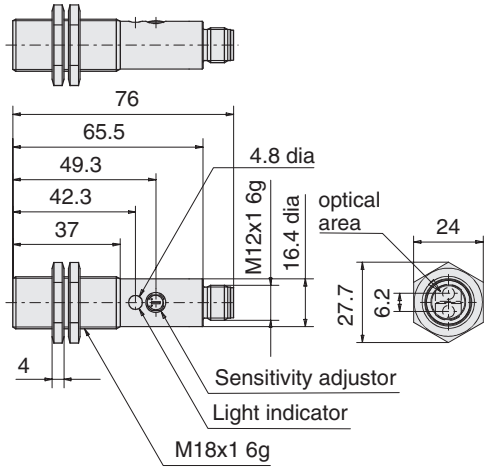

■ DC-Switching Models, metal (brass and stainless steel), radial type

Cable type	Connector type
Without potentiometer	
E3F2-R2R□41-M **E3F2-R2R□41-S**	**E3F2-R2R□41-M** **E3F2-R2R□41-M1-S**
With potentiometer	
E3F2-DS30□41-M **E3F2-DS30□41-S**	**E3F2-DS30□41-M1-M** **E3F2-DS30□41-M1-S**

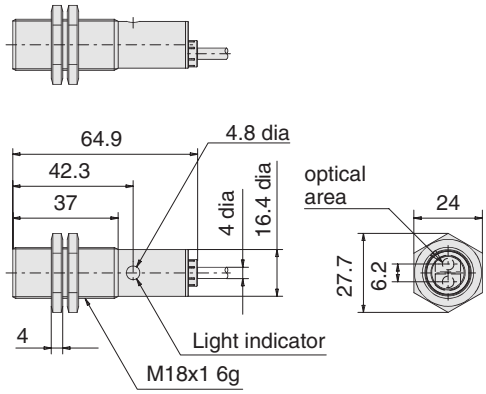

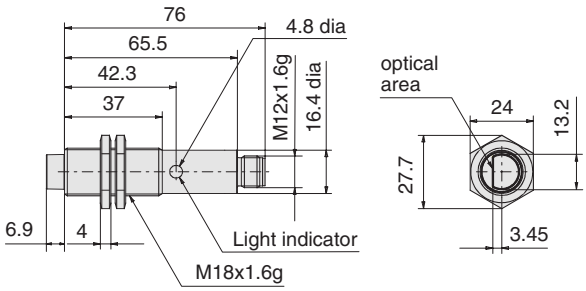

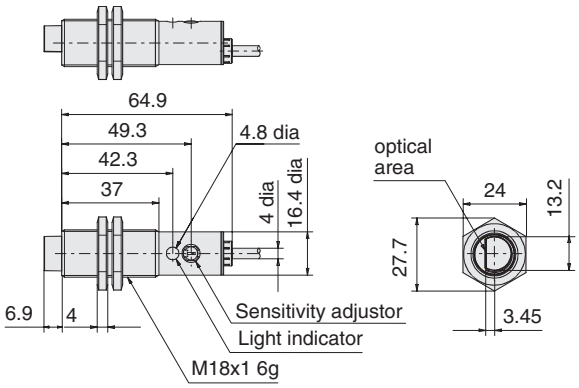

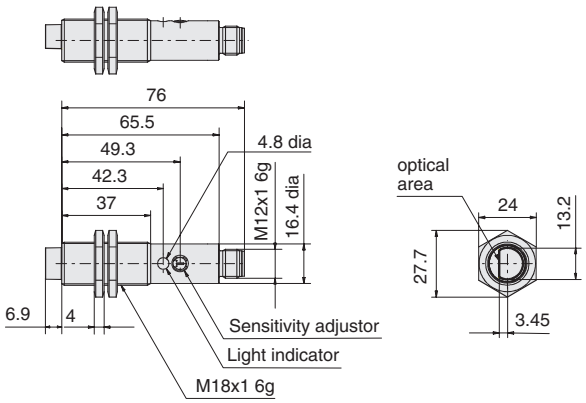

■ AC-Switching Models, plastic, axial type

Cable type
Without potentiometer
E3F2-3Z□ **E3F2-R2Z□** **E3F2-DS10Z□-N**

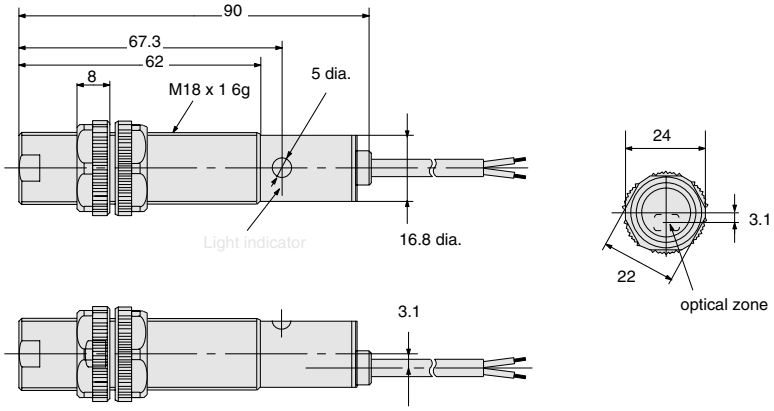

■ Accessories (Order Separately)

Reflectors

E39-R1
E39-R1S

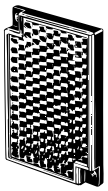

Material, reflective surface: acrylic
Rear surface: ABS

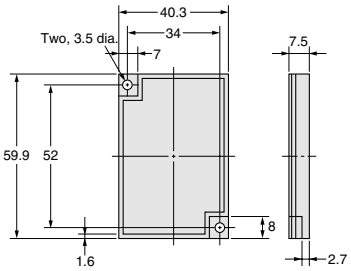

E39-R3

Material, reflective surface: acrylic
Rear surface: ABS

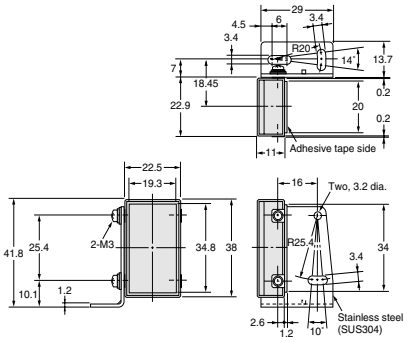

E39-R7

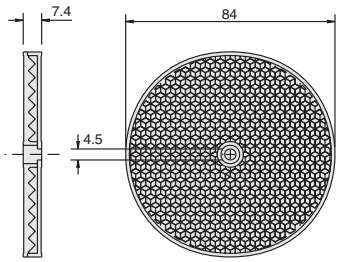

E39-R8

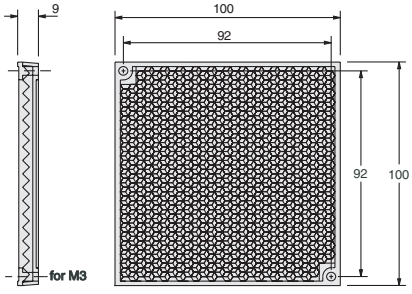

E39-R40

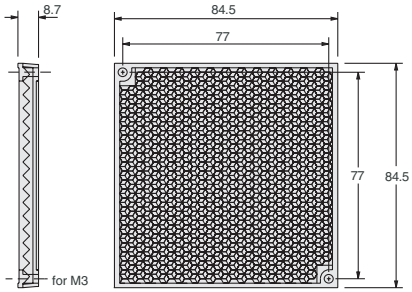

Tape Reflectors

E39-RS3

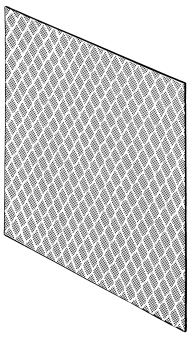

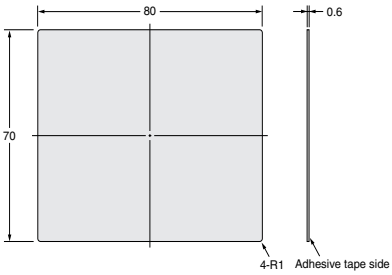

E39-RSA

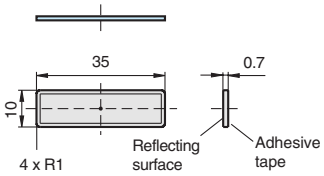

E39-RSB

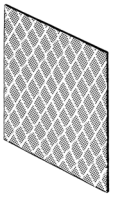

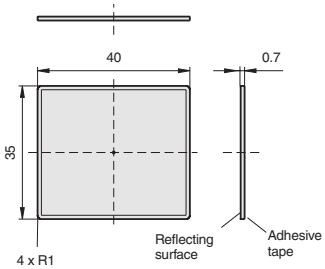

Installation

Mounting Bracket
Y92E-B18

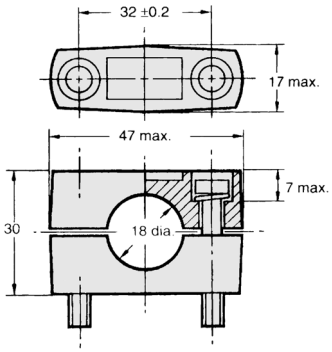

Note: Hexagon bolt: M5 x 32
Material: plastic

Lens Cap
E39-F31

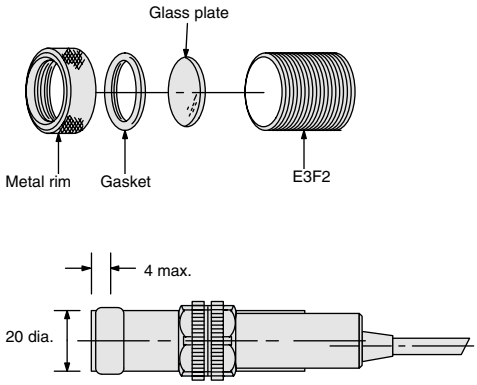

Mounting Bracket
Y92E-G18

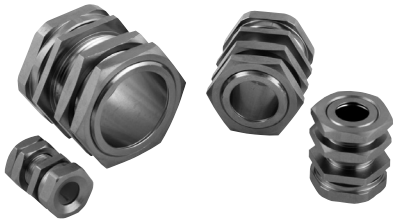

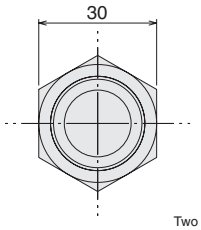

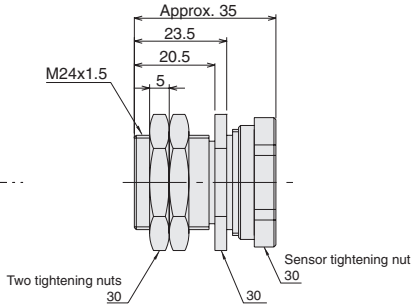

Slit (for precision detection with E3F2-10□)
E39-ES18

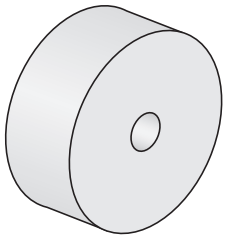

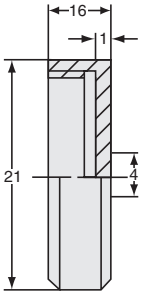

Precautions

The E3F2 Photoelectric Sensor is not a safety component for ensuring the safety of people which is defined in EC directive (91/368/EEC) and covered by separate European standards or by any other regulations or standards.

■ Degree of protection

The E3F2 photoelectric sensors have a degree of protection rated with IP67. In this case, the sensors have passed the OMRON heat shock test before the IP67-test of IEC 60529 (submersion at 1m water depth for 30 min). Afterwards the sensors have been tested according to the OMRON waterproof test.

Heat shock: The Alternating, fast temperature changes between -25°C and +55°C are executed for 5 cycles and 1 hour for each temperature. Function and isolation are checked.

Water proof: The sensors are submerged alternating in water of +2°C and +55°C. 20 cycles with 1 hour for each temperature are executed. Function, water tightness and electrical isolation are checked.

Do not expose the photoelectric sensor to excessive shock during installation, keeping within IP 67 standards.

■ Wiring

If the input/output lines of the photoelectric sensor are placed in the same conduit or duct as power lines or high-voltage lines, the photoelectric sensor could be induced to malfunction, or even be damaged by electrical noise. Separate the wiring, or use shielded lines as input/output lines to the photoelectric sensor.

Do not connect the black wire to the brown wire without a load. Direct connection of these wires may damage the photoelectric sensor (AC switching type).

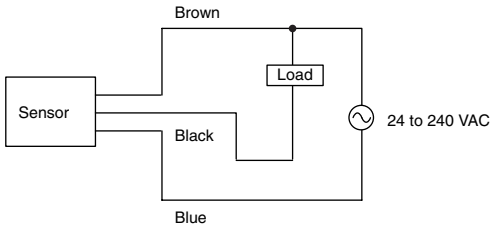

When using the photoelectric sensor in the vicinity of an inverter motor, ensure to connect the protective earth ground wire of the motor to earth. Failure to ground the motor may result in malfunction of the sensor.

When you use the photoelectric sensor at temperatures exceeding 45°C, the load current must be within the described values as shown in the figure below.

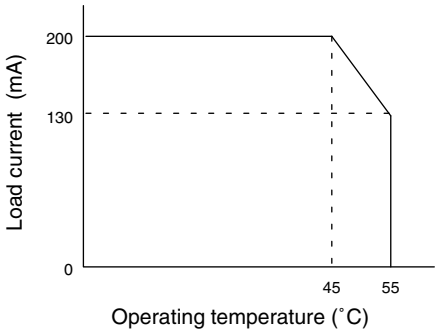

■ Installation

Do not exceed a torque of

- 2.0 Nm (20 kgf cm) when tightening mounting nuts for plastic models
- 20.0 Nm (200 kgf cm) when tightening mounting nuts for metal models

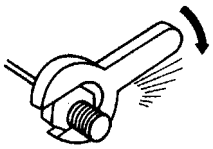

Certain Terms and Conditions of Sale

1. Offer; Acceptance. These terms and conditions (these "Terms") are deemed part of all catalogs, manuals or other documents, whether electronic or in writing, relating to the sale of goods or services (collectively, the "Goods") by Omron Electronics LLC and its subsidiary companies ("Seller"). Seller hereby objects to any terms or conditions proposed in Buyer's purchase order or other documents which are inconsistent with, or in addition to, these Terms. Please contact your Omron representative to confirm any additional terms for sales from your Omron company.
2. Prices. All prices stated are current, subject to change without notice by Seller. Buyer agrees to pay the price in effect at time of shipment.
3. Discounts. Cash discounts, if any, will apply only on the net amount of invoices sent to Buyer after deducting transportation charges, taxes and duties, and will be allowed only if (i) the invoice is paid according to Seller's payment terms and (ii) Buyer has no past due amounts owing to Seller.
4. Orders. Seller will accept no order less than $200 net billing.
5. Governmental Approvals. Buyer shall be responsible for, and shall bear all costs involved in, obtaining any government approvals required for the importation or sale of the Goods.
6. Taxes. All taxes, duties and other governmental charges (other than general real property and income taxes), including any interest or penalties thereon, imposed directly or indirectly on Seller or required to be collected directly or indirectly by Seller for the manufacture, production, sale, delivery, importation, consumption or use of the Goods sold hereunder (including customs duties and sales, excise, use, turnover and license taxes) shall be charged to and remitted by Buyer to Seller.
7. Financial. If the financial position of Buyer at any time becomes unsatisfactory to Seller, Seller reserves the right to stop shipments or require satisfactory security or payment in advance. If Buyer fails to make payment or otherwise comply with these Terms or any related agreement, Seller may (without liability and in addition to other remedies) cancel any unshipped portion of Goods sold hereunder and stop any Goods in transit until Buyer pays all amounts, including amounts payable hereunder, whether or not then due, which are owing to it by Buyer. Buyer shall in any event remain liable for all unpaid accounts.
8. Cancellation; Etc. Orders are not subject to rescheduling or cancellation unless Buyer indemnifies Seller fully against all costs or expenses arising in connection therewith.
9. Force Majeure. Seller shall not be liable for any delay or failure in delivery resulting from causes beyond its control, including earthquakes, fires, floods, strikes or other labor disputes, shortage of labor or materials, accidents to machinery, acts of sabotage, riots, delay in or lack of transportation or the requirements of any government authority.
10. Shipping; Delivery. Unless otherwise expressly agreed in writing by Seller:
    a. Shipments shall be by a carrier selected by Seller;
    b. Such carrier shall act as the agent of Buyer and delivery to such carrier shall constitute delivery to Buyer;
    c. All sales and shipments of Goods shall be FOB shipping point (unless otherwise stated in writing by Seller), at which point title to and all risk of loss of the Goods shall pass from Seller to Buyer, provided that Seller shall retain a security interest in the Goods until the full purchase price is paid by Buyer;
    d. Delivery and shipping dates are estimates only.
    e. Seller will package Goods as it deems proper for protection against normal handling and extra charges apply to special conditions.
11. Claims. Any claim by Buyer against Seller for shortage or damage to the Goods occurring before delivery to the carrier must be presented in writing to Seller within 30 days of receipt of shipment and include the original transportation bill signed by the carrier noting that the carrier received the Goods from Seller in the condition claimed.
12. Warranties. (a) Exclusive Warranty. Seller's exclusive warranty is that the Goods will be free from defects in materials and workmanship for a period of twelve months from the date of sale by Seller (or such other period expressed in writing by Seller). Seller disclaims all other warranties, express or implied. (b) Limitations. SELLER MAKES NO WARRANTY OR REPRESENTATION, EXPRESS OR IMPLIED, ABOUT NON-INFRINGEMENT, MERCHANTABILITY OR FITNESS FOR A PARTICULAR PURPOSE OF THE GOODS. BUYER ACKNOWLEDGES THAT IT ALONE HAS DETERMINED THAT THE GOODS WILL SUITABLY MEET THE REQUIREMENTS OF THEIR INTENDED USE. Seller further disclaims all warranties and responsibility of any type for claims or expenses based on infringement by the Goods or otherwise of any intellectual property right. (c) Buyer Remedy. Seller's sole obligation hereunder shall be to replace (in the form originally shipped with Buyer responsible for labor charges for removal or replacement thereof) the non-complying Good or, at Seller's election, to repay or credit Buyer an amount equal to the purchase price of the Good; provided that in no event shall Seller be responsible for warranty, repair, indemnity or any other claims or expenses regarding the Goods unless Seller's analysis confirms that the Goods were properly handled, stored, installed and maintained and not subject to contamination, abuse, misuse or inappropriate modification. Return of any goods by Buyer must be approved in writing by Seller before shipment. Seller shall not be liable for the suitability or unsuitability or the results from the use of Goods in combination with any electrical or electronic components, circuits, system assemblies or any other materials or substances or environments. Any advice, recommendations or information given orally or in writing, are not to be construed as an amendment or addition to the above warranty.
13. Damage Limits; Etc. SELLER SHALL NOT BE LIABLE FOR SPECIAL, INDIRECT OR CONSEQUENTIAL DAMAGES, LOSS OF PROFITS OR PRODUCTION OR COMMERCIAL LOSS IN ANY WAY CONNECTED WITH THE GOODS, WHETHER SUCH CLAIM IS BASED IN CONTRACT, WARRANTY, NEGLIGENCE OR STRICT LIABILITY. Further, in no event shall liability of Seller exceed the individual price of the Good on which liability is asserted.
14. Indemnities. Buyer shall indemnify and hold harmless Seller, its affiliates and its employees from and against all liabilities, losses, claims, costs and expenses (including attorney's fees and expenses) related to any claim, investigation, litigation or proceeding (whether or not Seller is a party) which arises or is alleged to arise from Buyer's acts or omissions under these Terms or in any way with respect to the Goods. Without limiting the foregoing, Buyer (at its own expense) shall indemnify and hold harmless Seller and defend or settle any action brought against Seller to the extent that it is based on a claim that any Good made to Buyer specifications infringed intellectual property rights of another party.
15. Property; Confidentiality. The intellectual property embodied in the Goods is the exclusive property of Seller and its affiliates and Buyer shall not attempt to duplicate it in any way without the written permission of Seller. Notwithstanding any charges to Buyer for engineering or tooling, all engineering and tooling shall remain the exclusive property of Seller. All information and materials supplied by Seller to Buyer relating to the Goods are confidential and proprietary, and Buyer shall limit distribution thereof to its trusted employees and strictly prevent disclosure to any third party.
16. Miscellaneous. (a) Waiver. No failure or delay by Seller in exercising any right and no course of dealing between Buyer and Seller shall operate as a waiver of rights by Seller. (b) Assignment. Buyer may not assign its rights hereunder without Seller's written consent. (c) Amendment. These Terms constitute the entire agreement between Buyer and Seller relating to the Goods, and no provision may be changed or waived unless in writing signed by the parties. (d) Severability. If any provision hereof is rendered ineffective or invalid, such provision shall not invalidate any other provision. (e) Setoff. Buyer shall have no right to set off any amounts against the amount owing in respect of this invoice. (f) As used herein, "including" means "including without limitation".

Certain Precautions on Specifications and Use

1. Suitability of Use. Seller shall not be responsible for conformity with any standards, codes or regulations which apply to the combination of the Good in the Buyer's application or use of the Good. At Buyer's request, Seller will provide applicable third party certification documents identifying ratings and limitations of use which apply to the Good. This information by itself is not sufficient for a complete determination of the suitability of the Good in combination with the end product, machine, system, or other application or use. The following are some examples of applications for which particular attention must be given. This is not intended to be an exhaustive list of all possible uses of this Good, nor is it intended to imply that the uses listed may be suitable for this Good:
   (i) Outdoor use, uses involving potential chemical contamination or electrical interference, or conditions or uses not described in this document.
   (ii) Energy control systems, combustion systems, railroad systems, aviation systems, medical equipment, amusement machines, vehicles, safety equipment, and installations subject to separate industry or government regulations.
   (iii) Systems, machines and equipment that could present a risk to life or property. Please know and observe all prohibitions of use applicable to this Good.

   NEVER USE THE PRODUCT FOR AN APPLICATION INVOLVING SERIOUS RISK TO LIFE OR PROPERTY WITHOUT ENSURING THAT THE SYSTEM AS A WHOLE HAS BEEN DESIGNED TO ADDRESS THE RISKS, AND THAT THE SELLER'S PRODUCT IS PROPERLY RATED AND INSTALLED FOR THE INTENDED USE WITHIN THE OVERALL EQUIPMENT OR SYSTEM.
2. Programmable Products. Seller shall not be responsible for the user's programming of a programmable Good, or any consequence thereof.
3. Performance Data. Performance data given in this catalog is provided as a guide for the user in determining suitability and does not constitute a warranty. It may represent the result of Seller's test conditions, and the user must correlate it to actual application requirements. Actual performance is subject to the Seller's Warranty and Limitations of Liability.
4. Change in Specifications. Product specifications and accessories may be changed at any time based on improvements and other reasons. It is our practice to change part numbers when published ratings or features are changed, or when significant construction changes are made. However, some specifications of the Good may be changed without any notice. When in doubt, special part numbers may be assigned to fix or establish key specifications for your application. Please consult with your Seller's representative at any time to confirm actual specifications of purchased Good.
5. Errors and Omissions. The information in this catalog has been carefully checked and is believed to be accurate; however, no responsibility is assumed for clerical, typographical or proofreading errors, or omissions.

Complete "Terms and Conditions of Sale" for product purchase and use are on Omron's website at www.omron.com/oei – under the "About Us" tab, in the Legal Matters section.

ALL DIMENSIONS SHOWN ARE IN MILLIMETERS.
To convert millimeters into inches, multiply by 0.03937. To convert grams into ounces, multiply by 0.03527.

OMRON®

OMRON ELECTRONICS LLC
One Commerce Drive
Schaumburg, IL 60173
847-843-7900
For US technical support or other inquiries:
800-556-6766

OMRON CANADA, INC.
885 Milner Avenue
Toronto, Ontario M1B 5V8
416-286-6465

OMRON ON-LINE
Global - http://www.omron.com
USA - http://www.omron.com/oei
Canada - http://www.omron.ca

Cat. No. E224-E3-04 04/05 Specifications subject to change without notice Printed in USA

OCEAN CHIPS
Океан Электроники
Поставка электронных компонентов

Компания «Океан Электроники» предлагает заключение долгосрочных отношений при поставках импортных электронных компонентов на взаимовыгодных условиях!

Наши преимущества:

- Поставка оригинальных импортных электронных компонентов напрямую с производств Америки, Европы и Азии, а так же с крупнейших складов мира;
- Широкая линейка поставок активных и пассивных импортных электронных компонентов (более 30 млн. наименований);
- Поставка сложных, дефицитных, либо снятых с производства позиций;
- Оперативные сроки поставки под заказ (от 5 рабочих дней);
- Экспресс доставка в любую точку России;
- Помощь Конструкторского Отдела и консультации квалифицированных инженеров;
- Техническая поддержка проекта, помощь в подборе аналогов, поставка прототипов;
- Поставка электронных компонентов под контролем ВП;
- Система менеджмента качества сертифицирована по Международному стандарту ISO 9001;
- При необходимости вся продукция военного и аэрокосмического назначения проходит испытания и сертификацию в лаборатории (по согласованию с заказчиком);
- Поставка специализированных компонентов военного и аэрокосмического уровня качества (Xilinx, Altera, Analog Devices, Intersil, Interpoint, Microsemi, Actel, Aeroflex, Peregrine, VPT, Syfer, Eurofarad, Texas Instruments, MS Kennedy, Miteq, Cobham, E2V, MA-COM, Hittite, Mini-Circuits, General Dynamics и др.);

Компания «Океан Электроники» является официальным дистрибьютором и эксклюзивным представителем в России одного из крупнейших производителей разъемов военного и аэрокосмического назначения **«JONHON»**, а так же официальным дистрибьютором и эксклюзивным представителем в России производителя высокотехнологичных и надежных решений для передачи СВЧ сигналов **«FORSTAR»**.

AVIC JONHON

«JONHON» (основан в 1970 г.)

Разъемы специального, военного и аэрокосмического назначения:

(Применяются в военной, авиационной, аэрокосмической, морской, железнодорожной, горно- и нефтедобывающей отраслях промышленности)

«FORSTAR» (основан в 1998 г.)

ВЧ соединители, коаксиальные кабели, кабельные сборки и микроволновые компоненты:

(Применяются в телекоммуникациях гражданского и специального назначения, в средствах связи, РЛС, а так же военной, авиационной и аэрокосмической отраслях промышленности).

FORSTAR®

Телефон: 8 (812) 309-75-97 (многоканальный)
Факс: 8 (812) 320-03-32
Электронная почта: ocean@oceanchips.ru
Web: http://oceanchips.ru/
Адрес: 198099, г. Санкт-Петербург, ул. Калинина, д. 2, корп. 4, лит. А