Product datasheet
Characteristics

VW3A4554

Main

Range of product	Altivar
Product or component type	Line/motor choke
Product compatibility	ATV31CD11N4 - line choke - 1 per drive ATV61HU40M3 - line choke - 1 per drive ATV61HU55M3 - line choke - 1 per drive ATV31CD11N4 - motor choke - 1 per drive ATV31CD15N4 - line choke - 1 per drive ATV31CU75N4 - motor choke - 1 per drive ATV61HD11N4 - line choke - 1 per drive ATV61HD15N4 - line choke - 1 per drive ATV61HD18Y - line choke - 1 per drive ATV61HD22Y - line choke - 1 per drive ATV61WD11N4 - line choke - 1 per drive ATV61WD11N4C - line choke - 1 per drive ATV61WD15N4 - line choke - 1 per drive ATV61WD15N4C - line choke - 1 per drive ATV71HD11N4 - line choke - 1 per drive ATV71HD15N4 - line choke - 1 per drive ATV71HD18Y - line choke - 1 per drive ATV71HD22Y - line choke - 1 per drive ATV71HU40M3 - line choke - 1 per drive ATV71HU55M3 - line choke - 1 per drive ATV312HD11N4 - line choke - 1 per drive ATV312HD15N4 - line choke - 1 per drive ATV312HD15S6 - line choke - 1 per drive ATV312HU40M3 - line choke - 1 per drive ATV312HU55M3 - line choke - 1 per drive ATV312HU75M3 - line choke - 1 per drive LXM32.D30N4 - line choke - 1 per drive LXM32.D72N4 - line choke - 1 per drive ATV312HD11N4 - motor choke - 1 per drive ATV312HD15S6 - motor choke - 1 per drive ATV312HU40M3 - motor choke - 1 per drive ATV312HU55M3 - motor choke - 1 per drive ATV312HU75M3 - motor choke - 1 per drive ATV312HU75N4 - motor choke - 1 per drive ATV312HD11S6 - motor choke - 1 per drive ATV12HU40M3 - motor choke - 1 per drive ATV12PU40M3 - motor choke - 1 per drive LXM32.D18N4 - line choke - 1 per drive ATV32HD11N4 - line choke - 1 per drive ATV32HD11N4 - motor choke - 1 per drive ATV32HD15N4 - line choke - 1 per drive ATV32HU75N4 - motor choke - 1 per drive ATV71PD11N4Z - line choke - 1 per drive ATV71WD11N4 - line choke - 1 per drive ATV71WD15N4 - line choke - 1 per drive LXM32MD85N4 - line choke - 1 per drive LXM32MC10N4 - line choke - 1 per drive Variable speed drive ATV310 motor : 7.5 kW - line choke - 1 per drive Variable speed drive ATV310 motor : 11 kW - line choke - 1 per drive Variable speed drive ATV310 motor : 7.5 kW - motor choke - 1 per drive Variable speed drive ATV310 motor : 11 kW - motor choke - 1 per drive Variable speed drive ATV340 motor : 7.5 kW 380...480 V - line choke - 1 per drive Variable speed drive ATV340 motor : 11 kW 380...480 V - line choke - 1 per drive Variable speed drive ATV340 motor : 15 kW 380...480 V - line choke - 1 per drive Variable speed drive ATV320 motor : 11 kW 380...500 V - three phase - line choke - 1 per drive Variable speed drive ATV320 motor : 15 kW 380...500 V - three phase - line choke - 1 per drive Variable speed drive ATV320 motor : 7.5 kW 380...500 V - three phase - motor choke - 1 per

The information provided in this documentation contains general descriptions and/or technical characteristics of the performance of the products contained herein.
This documentation is not intended as a substitute for and is not to be used for determining suitability or reliability of these products for specific user applications.
It is the duty of any such user or integrator to perform the appropriate and complete risk analysis, evaluation and testing of the products with respect to the relevant specific application or use thereof.
Neither Schneider Electric Industries SAS nor any of its affiliates or subsidiaries shall be responsible or liable for misuse of the information contained herein.

	drive Variable speed drive ATV320 motor : 11 kW 380...500 V - three phase - motor choke - 1 per drive Variable speed drive ATV320 motor : 4 kW 200...240 V - three phase - line choke - 1 per drive Variable speed drive ATV320 motor : 5.5 kW 200...240 V - three phase - line choke - 1 per drive Variable speed drive ATV320 motor : 7.5 kW 200...240 V - three phase - line choke - 1 per drive Variable speed drive ATV320 motor : 4 kW 200...240 V - three phase - motor choke - 1 per drive Variable speed drive ATV320 motor : 5.5 kW 200...240 V - three phase - motor choke - 1 per drive Variable speed drive ATV320 motor : 7.5 kW 200...240 V - three phase - motor choke - 1 per drive Variable speed drive ATV320 motor : 11 kW 525...600 V - three phase - line choke - 1 per drive Variable speed drive ATV320 motor : 15 kW 525...600 V - three phase - line choke - 1 per drive Variable speed drive ATV320 motor : 11 kW 525...600 V - three phase - motor choke - 1 per drive Variable speed drive ATV320 motor : 15 kW 525...600 V - three phase - motor choke - 1 per drive Variable speed drive ATV630 motor : 18.5 kW 500...690 V - three phase - line choke - 1 per drive Variable speed drive ATV630 motor : 22 kW 500...690 V - three phase - line choke - 1 per drive Variable speed drive ATV930 motor : 18.5 kW 500...690 V - three phase - line choke - 1 per drive Variable speed drive ATV930 motor : 22 kW 500...690 V - three phase - line choke - 1 per drive Variable speed drive ATV630 motor : 600 V - three phase - line choke - 25 hp - 1 per drive Variable speed drive ATV630 motor : 600 V - three phase - line choke - 30 hp - 1 per drive Variable speed drive ATV930 motor : 600 V - three phase - line choke - 25 hp - 1 per drive Variable speed drive ATV930 motor : 600 V - three phase - line choke - 30 hp - 1 per drive Variable speed drive ATV310L motor : 0.75 kW Variable speed drive ATV310L motor : 1.5 kW Variable speed drive ATV310L motor : 2.2 kW Variable speed drive ATV310L motor : 3 kW Variable speed drive ATV310L motor : 4 kW Variable speed drive ATV310L motor : 5.5 kW
Phase	Three phase
Range compatibility	Altivar 12 Altivar 312 Altivar 61 Altivar 71 Altivar 32 Lexium 32 Altivar 31C Altivar 312 Solar Altivar Easy 310 Lexium 52 Lexium 62 Altivar Process ATV600 Altivar Process ATV900 Altivar Machine ATV320 Altivar Machine ATV340 Altivar Easy 310L
Device application	Reduction of current harmonics Reduction of overvoltages at motor terminals
Value of inductance	1 mH
Line Rated Current	31 A
Thermal losses	90 W
Electrical connection	Terminal 16 mm² / AWG 4, 10.62...12.39 lbf.in (1.2...1.4 N.m)

Complementary

Supply frequency	50...60 Hz
Max current	1.65 x nominal current 60 s
Voltage drop at rated load	<= 5 %
Electrical insulation class	Class F
Clearance distance	>= 5.5 mm conforming to IEC 60664
Leakage distance	0.45 in (11.5 mm) conforming to IEC 60664
Product weight	13.23 lb(US) (6 kg)
Width	6.1 in (155 mm)
Height	6.69 in (170 mm)
Depth	5.31 in (135 mm)

Environment

standards	EN 50178 IEC 60076 (with HD398) VDE 0160 level 1
IP degree of protection	IP00 (choke) IP10 (terminals)
environmental characteristic	3B1 conforming to IEC 721-3-3 3C2 conforming to IEC 721-3-3 3S1 conforming to IEC 721-3-3
pollution degree	2 conforming to EN 50178
vibration resistance	1.5 mm peak to peak (f = 3...13 Hz) conforming to IEC 60068-2-6 1 gn (f = 13...200 Hz) conforming to IEC 60068-2-6
shock resistance	15 gn 11 ms conforming to IEC 60068-2-27
relative humidity	0...95 %
ambient air temperature for operation	32...113 °F (0...45 °C) without current derating 32...113 °F (0...45 °C) without current derating 45...55 °C with current derating of 2 % per °C
ambient air temperature for storage	-13...158 °F (-25...70 °C)
operating altitude	<= 3280.84 ft (1000 m) without current derating 3280.84...9842.52 ft (1000...3000 m) with current derating 1 % per 100 m

Offer Sustainability

Not Green Premium product	Not Green Premium product
Compliant - since 0801 - Schneider Electric declaration of conformity	Compliant - since 0801 - Schneider Electric declaration of conformity
WARNING: This product can expose you to chemicals including:	WARNING: This product can expose you to chemicals including:
Lead and lead compounds, which is known to the State of California to cause cancer and birth defects or other reproductive harm.	Lead and lead compounds, which is known to the State of California to cause cancer and birth defects or other reproductive harm.
Bisphenol A (BPA), which is known to the State of California to cause birth defects or other reproductive harm.	Bisphenol A (BPA), which is known to the State of California to cause birth defects or other reproductive harm.
For more information go to www.p65warnings.ca.gov	For more information go to www.p65warnings.ca.gov

Contractual warranty

Warranty period	18 months

Dimensions

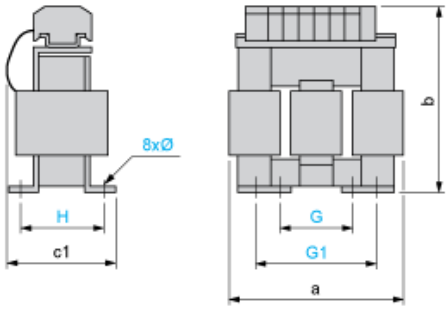

Dimensions in mm

a	b	c1	G	G1	H	Ø
155	170	135	75	107	90	6 x 12

Dimensions in in.

a	b	c1	G	G1	H	Ø
6.10	6.69	5.31	2.95	4.21	3.54	0.24 x 0.47

Recommended Schema - Line Choke

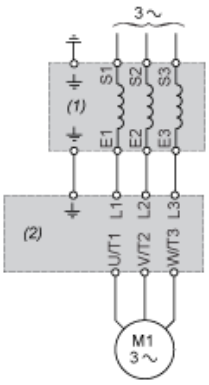

(1) Line Choke

(2) Drive

Recommended Schema - Motor Choke

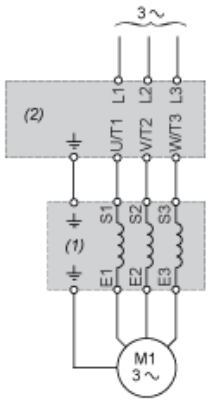

(1) Motor Choke

(2) Drive

OCEAN CHIPS
Океан Электроники
Поставка электронных компонентов

Компания «Океан Электроники» предлагает заключение долгосрочных отношений при поставках импортных электронных компонентов на взаимовыгодных условиях!

Наши преимущества:

- Поставка оригинальных импортных электронных компонентов напрямую с производств Америки, Европы и Азии, а так же с крупнейших складов мира;
- Широкая линейка поставок активных и пассивных импортных электронных компонентов (более 30 млн. наименований);
- Поставка сложных, дефицитных, либо снятых с производства позиций;
- Оперативные сроки поставки под заказ (от 5 рабочих дней);
- Экспресс доставка в любую точку России;
- Помощь Конструкторского Отдела и консультации квалифицированных инженеров;
- Техническая поддержка проекта, помощь в подборе аналогов, поставка прототипов;
- Поставка электронных компонентов под контролем ВП;
- Система менеджмента качества сертифицирована по Международному стандарту ISO 9001;
- При необходимости вся продукция военного и аэрокосмического назначения проходит испытания и сертификацию в лаборатории (по согласованию с заказчиком);
- Поставка специализированных компонентов военного и аэрокосмического уровня качества (Xilinx, Altera, Analog Devices, Intersil, Interpoint, Microsemi, Actel, Aeroflex, Peregrine, VPT, Syfer, Eurofarad, Texas Instruments, MS Kennedy, Miteq, Cobham, E2V, MA-COM, Hittite, Mini-Circuits, General Dynamics и др.);

Компания «Океан Электроники» является официальным дистрибьютором и эксклюзивным представителем в России одного из крупнейших производителей разъемов военного и аэрокосмического назначения **«JONHON»**, а так же официальным дистрибьютором и эксклюзивным представителем в России производителя высокотехнологичных и надежных решений для передачи СВЧ сигналов **«FORSTAR»**.

AVIC JONHON

«JONHON» (основан в 1970 г.)

Разъемы специального, военного и аэрокосмического назначения:

(Применяются в военной, авиационной, аэрокосмической, морской, железнодорожной, горно- и нефтедобывающей отраслях промышленности)

«FORSTAR» (основан в 1998 г.)

ВЧ соединители, коаксиальные кабели, кабельные сборки и микроволновые компоненты:

(Применяются в телекоммуникациях гражданского и специального назначения, в средствах связи, РЛС, а так же военной, авиационной и аэрокосмической отраслях промышленности).

FORSTAR®

Телефон: 8 (812) 309-75-97 (многоканальный)
Факс: 8 (812) 320-03-32
Электронная почта: ocean@oceanchips.ru
Web: http://oceanchips.ru/
Адрес: 198099, г. Санкт-Петербург, ул. Калинина, д. 2, корп. 4, лит. А