FAIRCHILD SEMICONDUCTOR®

November 2008

FDS6688AS

30V N-Channel PowerTrench® SyncFET™

General Description

The FDS6688AS is designed to replace a single SO-8 MOSFET and Schottky diode in synchronous DC:DC power supplies. This 30V MOSFET is designed to maximize power conversion efficiency, providing a low $R_{DS(ON)}$ and low gate charge. The FDS6688AS includes an integrated Schottky diode using Fairchild's monolithic SyncFET technology.

Applications

- DC/DC converter
- Low side notebook

Features

- 14.5 A, 30 V. $R_{DS(ON)}$ max= 6.0 mΩ @ V_{GS} = 10 V
  $R_{DS(ON)}$ max= 7.3 mΩ @ V_{GS} = 4.5 V
- Includes SyncFET Schottky body diode
- Low gate charge (45nC typical)
- High performance trench technology for extremely low $R_{DS(ON)}$ and fast switching
- High power and current handling capability
- RoHS Compliant

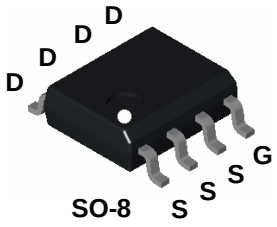

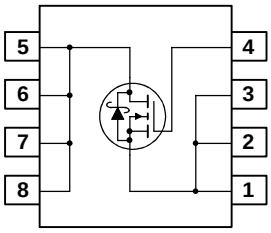

Absolute Maximum Ratings

T_A=25°C unless otherwise noted

Symbol	Parameter		Ratings	Units
V_{DSS}	Drain-Source Voltage		30	V
V_{GSS}	Gate-Source Voltage		±20	V
I_D	Drain Current – Continuous	(Note 1a)	14.5	A
	– Pulsed		50	
P_D	Power Dissipation for Single Operation	(Note 1a)	2.5	W
		(Note 1b)	1.2	
		(Note 1c)	1	
T_J, T_{STG}	Operating and Storage Junction Temperature Range		–55 to +150	°C

Thermal Characteristics

$R_{\theta JA}$	Thermal Resistance, Junction-to-Ambient	(Note 1a)	50	°C/W
$R_{\theta JC}$	Thermal Resistance, Junction-to-Case	(Note 1)	25	

Package Marking and Ordering Information

Device Marking	Device	Reel Size	Tape width	Quantity
FDS6688AS	FDS6688AS	13''	12mm	2500 units

©2008 Fairchild Semiconductor Corporation

Electrical Characteristics

T_A = 25°C unless otherwise noted

Symbol	Parameter	Test Conditions	Min	Typ	Max	Units
Off Characteristics						
BV_{DSS}	Drain–Source Breakdown Voltage	V_{GS} = 0 V, I_D = 1 mA	30			V
$\frac{\Delta BV_{DSS}}{\Delta T_J}$	Breakdown Voltage Temperature Coefficient	I_D = 10 mA, Referenced to 25°C		20		mV/°C
I_{DSS}	Zero Gate Voltage Drain Current	V_{DS} = 24 V, V_{GS} = 0 V			500	μA
I_{GSS}	Gate–Body Leakage	V_{GS} = ±20 V, V_{DS} = 0 V			±100	nA
On Characteristics (Note 2)						
$V_{GS(th)}$	Gate Threshold Voltage	V_{DS} = V_{GS}, I_D = 1 mA	1	1.5	3	V
$\frac{\Delta V_{GS(th)}}{\Delta T_J}$	Gate Threshold Voltage Temperature Coefficient	I_D = 10 mA, Referenced to 25°C		–4		mV/°C
$R_{DS(on)}$	Static Drain–Source On–Resistance	V_{GS} = 10 V, I_D = 14.5 A V_{GS} = 4.5 V, I_D = 13.2 A V_{GS}=10 V, I_D =14.5A, T_J=125°C		4.5 5.9 6.7	6.0 7.3 8.5	mΩ
$I_{D(on)}$	On–State Drain Current	V_{GS} = 10 V, V_{DS} = 5 V	50			A
g_{FS}	Forward Transconductance	V_{DS} = 10 V, I_D = 14.5 A		66		S
Dynamic Characteristics						
C_{iss}	Input Capacitance	V_{DS} = 15 V, V_{GS} = 0 V, f = 1.0 MHz		2510		pF
C_{oss}	Output Capacitance			710		pF
C_{rss}	Reverse Transfer Capacitance			270		pF
R_G	Gate Resistance	V_{GS} = 15 mV, f = 1.0 MHz		1.6	2.8	Ω
Switching Characteristics (Note 2)						
$t_{d(on)}$	Turn–On Delay Time	V_{DD} = 15 V, I_D = 1 A, V_{GS} = 10 V, R_{GEN} = 6 Ω		10	20	ns
t_r	Turn–On Rise Time			12	22	ns
$t_{d(off)}$	Turn–Off Delay Time			43	69	ns
t_f	Turn–Off Fall Time			29	46	ns
$t_{d(on)}$	Turn–On Delay Time	V_{DD} = 15 V, I_D = 1 A, V_{GS} = 4.5 V, R_{GEN} = 6 Ω		17	31	ns
t_r	Turn–On Rise Time			22	35	ns
$t_{d(off)}$	Turn–Off Delay Time			34	54	ns
t_f	Turn–Off Fall Time			29	46	ns
$Q_{g(TOT)}$	Total Gate Charge at Vgs=10V	V_{DD} = 15 V, I_D = 14.5 A,		45	63	nC
Q_g	Total Gate Charge at Vgs=5V			25	35	nC
Q_{gs}	Gate–Source Charge			7		nC
Q_{gd}	Gate–Drain Charge			8		nC

Electrical Characteristics

T_A = 25°C unless otherwise noted

Symbol	Parameter	Test Conditions	Min	Typ	Max	Units
Drain–Source Diode Characteristics and Maximum Ratings						
V_{SD}	Drain–Source Diode Forward Voltage	V_{GS} = 0 V, I_S = 3.5 A (Note 2) V_{GS} = 0 V, I_S = 7 A (Note 2)		0.4 0.5	0.7	V
t_{rr}	Diode Reverse Recovery Time	I_F = 14.5A,		27		nS
I_{RM}	Diode Reverse Recovery Current	d_{iF}/d_t = 300 A/µs (Note 3)		1.9		A
Q_{rr}	Diode Reverse Recovery Charge			26		nC

Notes:

1. $R_{\theta JA}$ is the sum of the junction-to-case and case-to-ambient thermal resistance where the case thermal reference is defined as the solder mounting surface of the drain pins. $R_{\theta JC}$ is guaranteed by design while $R_{\theta CA}$ is determined by the user's board design.

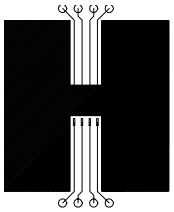

a) 50°/W when mounted on a 1 in^2 pad of 2 oz copper

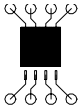

b) 105°/W when mounted on a .04 in^2 pad of 2 oz copper

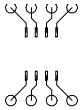

Typical Characteristics

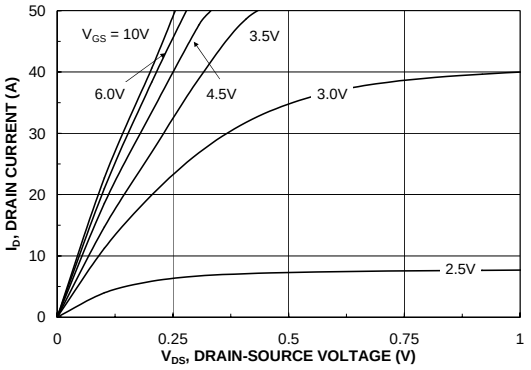

Figure 1. On-Region Characteristics.

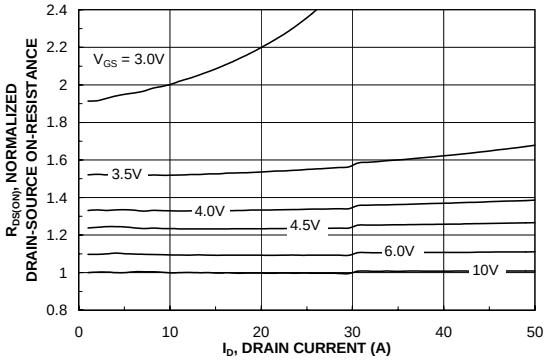

Figure 2. On-Resistance Variation with Drain Current and Gate Voltage.

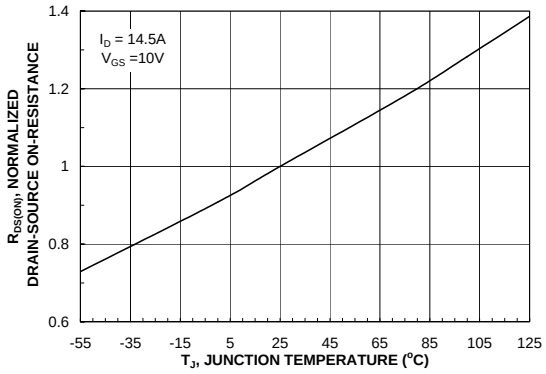

Figure 3. On-Resistance Variation with Temperature.

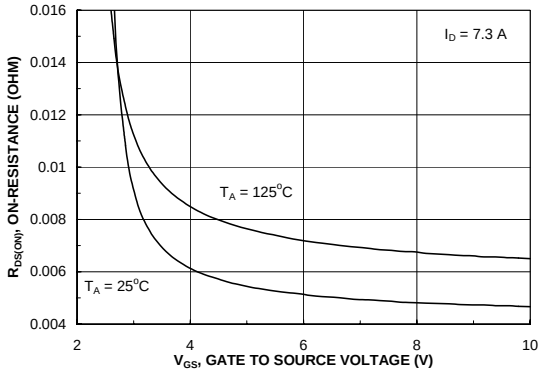

Figure 4. On-Resistance Variation with Gate-to-Source Voltage.

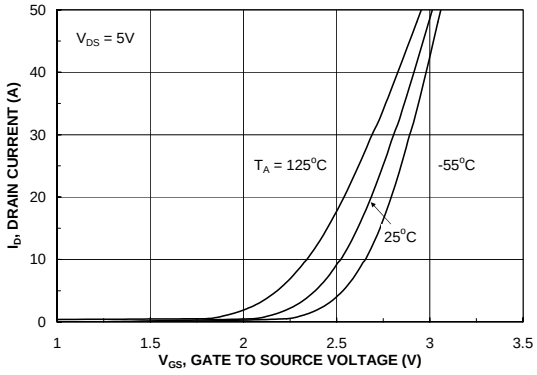

Figure 5. Transfer Characteristics.

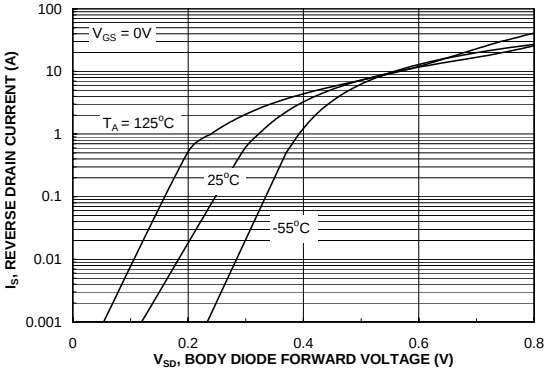

Figure 6. Body Diode Forward Voltage Variation with Source Current and Temperature.

Typical Characteristics (continued)

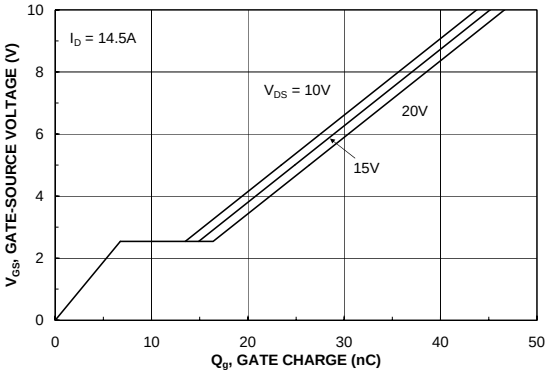

Figure 7. Gate Charge Characteristics.

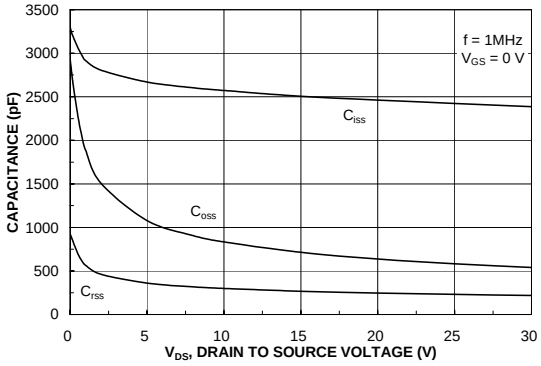

Figure 8. Capacitance Characteristics.

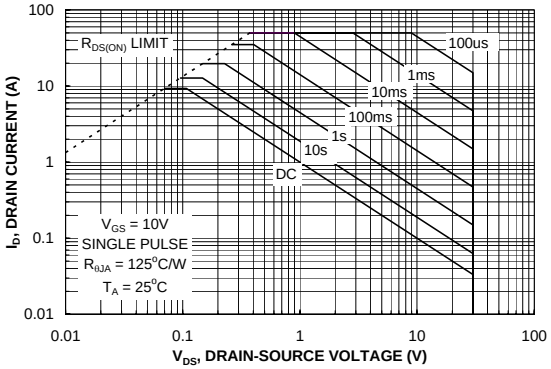

Figure 9. Maximum Safe Operating Area.

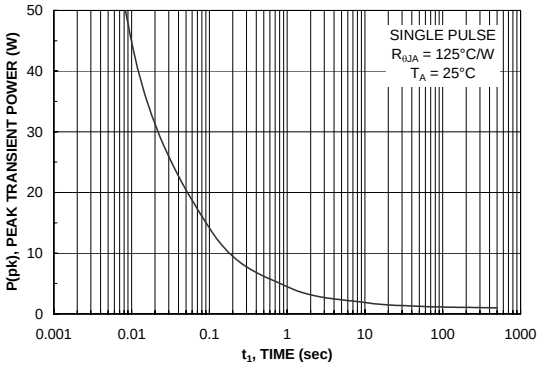

Figure 10. Single Pulse Maximum Power Dissipation.

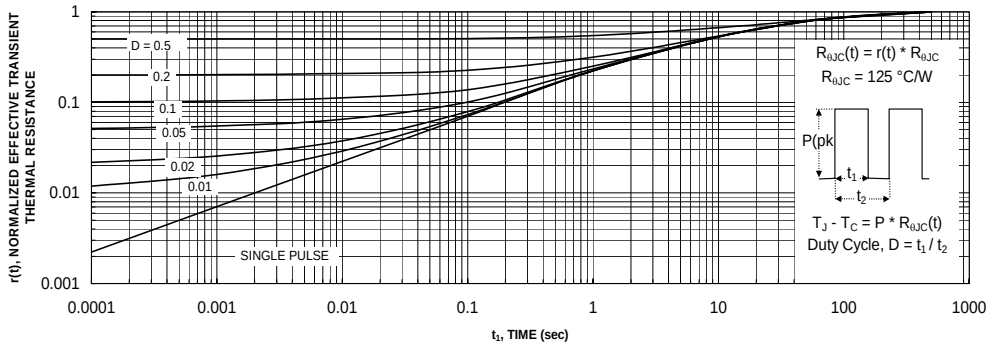

Figure 11. Transient Thermal Response Curve.

Thermal characterization performed using the conditions described in Note 1c.
Transient thermal response will change depending on the circuit board design.

Typical Characteristics (continued)

SyncFET Schottky Body Diode Characteristics

Fairchild's SyncFET process embeds a Schottky diode in parallel with PowerTrench MOSFET. This diode exhibits similar characteristics to a discrete external Schottky diode in parallel with a MOSFET. Figure 12 shows the reverse recovery characteristic of the FDS6688AS.

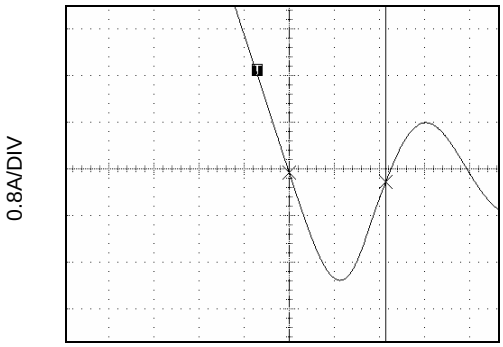

Figure 12. FDS6676AS SyncFET body diode reverse recovery characteristic.

For comparison purposes, Figure 13 shows the reverse recovery characteristics of the body diode of an equivalent size MOSFET produced without SyncFET (FDS6688).

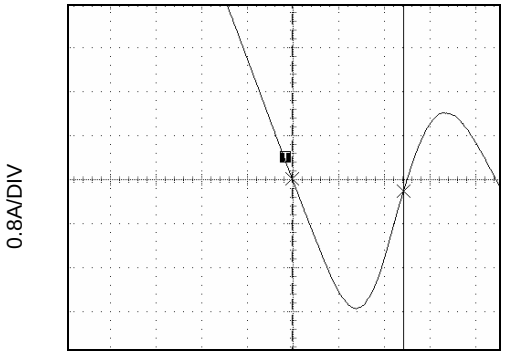

Figure 13. Non-SyncFET (FDS6688) body diode reverse recovery characteristic.

Schottky barrier diodes exhibit significant leakage at high temperature and high reverse voltage. This will increase the power in the device.

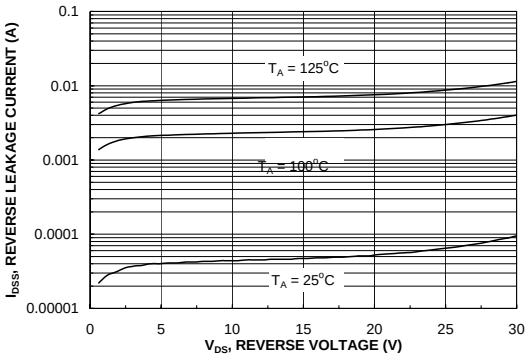

Figure 14. SyncFET body diode reverse leakage versus drain-source voltage and temperature.

Typical Characteristics

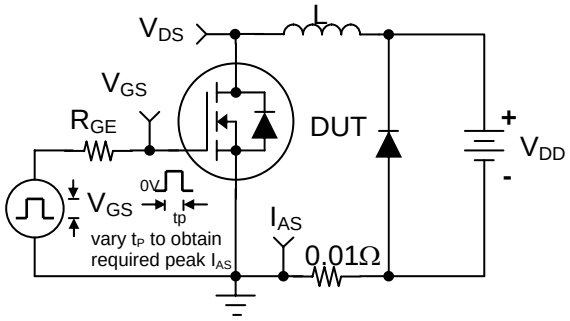

Figure 15. Unclamped Inductive Load Test Circuit

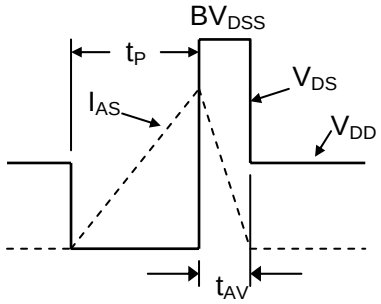

Figure 16. Unclamped Inductive Waveforms

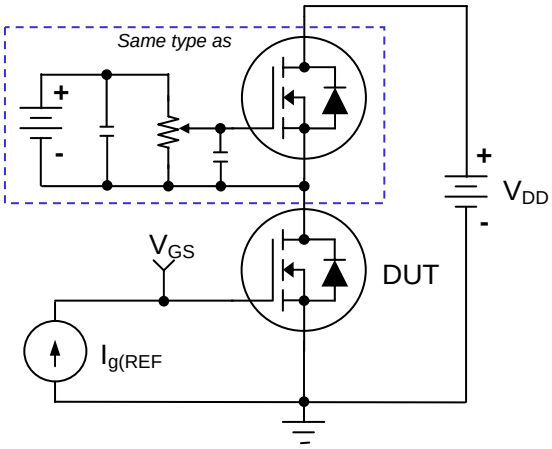

Figure 17. Gate Charge Test Circuit

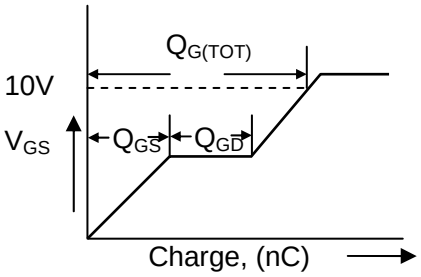

Figure 18. Gate Charge Waveform

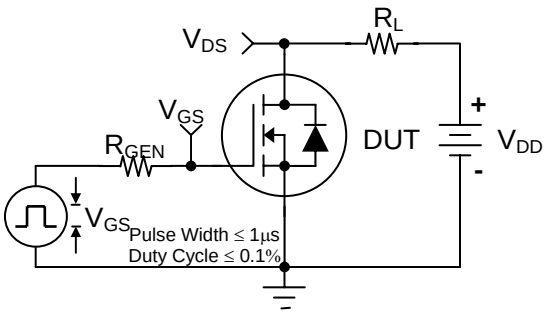

Figure 19. Switching Time Test Circuit

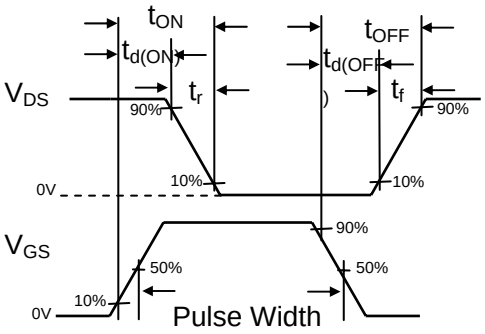

Figure 20. Switching Time Waveforms

FAIRCHILD SEMICONDUCTOR®

TRADEMARKS

The following includes registered and unregistered trademarks and service marks, owned by Fairchild Semiconductor and/or its global subsidianries, and is not intended to be an exhaustive list of all such trademarks.

ACEx®
Build it Now™
CorePLUS™
CorePOWER™
CROSSVOLT™
CTL™
Current Transfer Logic™
EcoSPARK®
EfficentMax™
EZSWITCH™ *
™
®
Fairchild®
Fairchild Semiconductor®
FACT Quiet Series™
FACT®
FAST®
FastvCore™
FlashWriter® *
FPS™
F-PFS™
FRFET®
Global Power Resource℠
Green FPS™
Green FPS™ e-Series™
GTO™
IntelliMAX™
ISOPLANAR™
MegaBuck™
MICROCOUPLER™
MicroFET™
MicroPak™
MillerDrive™
MotionMax™
Motion-SPM™
OPTOLOGIC®
OPTOPLANAR®
®
PDP-SPM™
Power-SPM™
PowerTrench®
Programmable Active Droop™
QFET®
QS™
Quiet Series™
RapidConfigure™
Saving our world 1mW at a time™
SmartMax™
SMART START™
SPM®
STEALTH™
SuperFET™
SuperSOT™-3
SuperSOT™-6
SuperSOT™-8
SuperMOS™
SYSTEM GENERAL ®
The Power Franchise®
the power franchise
TinyBoost™
TinyBuck™
TinyLogic®
TINYOPTO™
TinyPower™
TinyPWM™
TinyWire™
µSerDes™
SerDes
UHC®
Ultra FRFET™
UniFET™
VCX™
VisualMax™

* EZSWITCH™ and FlashWriter® are trademarks of System General Corporation, used under license by Fairchild Semiconductor.

DISCLAIMER

FAIRCHILD SEMICONDUCTOR RESERVES THE RIGHT TO MAKE CHANGES WITHOUT FURTHER NOTICE TO ANY PRODUCTS HEREIN TO IMPROVE RELIABILITY, FUNCTION, OR DESIGN. FAIRCHILD DOES NOT ASSUME ANY LIABILITY ARISING OUT OF THE APPLICATION OR USE OF ANY PRODUCT OR CIRCUIT DESCRIBED HEREIN; NEITHER DOES IT CONVEY ANY LICENSE UNDER ITS PATENT RIGHTS, NOR THE RIGHTS OF OTHERS. THESE SPECIFICATIONS DO NOT EXPAND THE TERMS OF FAIRCHILD'S WORLDWIDE TERMS AND CONDITIONS, SPECIFICALLY THE WARRANTY THEREIN, WHICH COVERS THESE PRODUCTS.

LIFE SUPPORT POLICY

FAIRCHILD'S PRODUCTS ARE NOT AUTHORIZED FOR USE AS CRITICAL COMPONENTS IN LIFE SUPPORT DEVICES OR SYSTEMS WITHOUT THE EXPRESS WRITTEN APPROVAL OF FAIRCHILD SEMICONDUCTOR CORPORATION.

As used herein:

1. Life support devices or systems are devices or systems which, (a) are intended for surgical implant into the body or (b) support or sustain life, and (c) whose failure to perform when properly used in accordance with instructions for use provided in the labeling, can be reasonably expected to result in a significant injury of the user.
2. A critical component in any component of a life support, device, or system whose failure to perform can be reasonably expected to cause the failure of the life support device or system, or to affect its safety or effectiveness.

PRODUCT STATUS DEFINITIONS

Definition of Terms

Datasheet Identification	Product Status	Definition
Advance Information	Formative or In Design	This datasheet contains the design specifications for product development. Specifications may change in any manner without notice.
Preliminary	First Production	This datasheet contains preliminary data; supplementary data will be published at a later date. Fairchild Semiconductor reserves the right to make changes at any time without notice to improve design.
No Identification Needed	Full Production	This datasheet contains final specifications. Fairchild Semiconductor reserves the right to make changes at any time without notice to improve the design.
Obsolete	Not In Production	This datasheet contains specifications on a product that is discontinued by Fairchild Semiconductor. The datasheet is for reference information only.

Rev. I34

OCEAN CHIPS
Океан Электроники
Поставка электронных компонентов

Компания «Океан Электроники» предлагает заключение долгосрочных отношений при поставках импортных электронных компонентов на взаимовыгодных условиях!

Наши преимущества:

- Поставка оригинальных импортных электронных компонентов напрямую с производств Америки, Европы и Азии, а так же с крупнейших складов мира;
- Широкая линейка поставок активных и пассивных импортных электронных компонентов (более 30 млн. наименований);
- Поставка сложных, дефицитных, либо снятых с производства позиций;
- Оперативные сроки поставки под заказ (от 5 рабочих дней);
- Экспресс доставка в любую точку России;
- Помощь Конструкторского Отдела и консультации квалифицированных инженеров;
- Техническая поддержка проекта, помощь в подборе аналогов, поставка прототипов;
- Поставка электронных компонентов под контролем ВП;
- Система менеджмента качества сертифицирована по Международному стандарту ISO 9001;
- При необходимости вся продукция военного и аэрокосмического назначения проходит испытания и сертификацию в лаборатории (по согласованию с заказчиком);
- Поставка специализированных компонентов военного и аэрокосмического уровня качества (Xilinx, Altera, Analog Devices, Intersil, Interpoint, Microsemi, Actel, Aeroflex, Peregrine, VPT, Syfer, Eurofarad, Texas Instruments, MS Kennedy, Miteq, Cobham, E2V, MA-COM, Hittite, Mini-Circuits, General Dynamics и др.);

Компания «Океан Электроники» является официальным дистрибьютором и эксклюзивным представителем в России одного из крупнейших производителей разъемов военного и аэрокосмического назначения «**JONHON**», а так же официальным дистрибьютором и эксклюзивным представителем в России производителя высокотехнологичных и надежных решений для передачи СВЧ сигналов «**FORSTAR**».

AVIC JONHON

«JONHON» (основан в 1970 г.)

Разъемы специального, военного и аэрокосмического назначения:

(Применяются в военной, авиационной, аэрокосмической, морской, железнодорожной, горно- и нефтедобывающей отраслях промышленности)

«FORSTAR» (основан в 1998 г.)

ВЧ соединители, коаксиальные кабели, кабельные сборки и микроволновые компоненты:

(Применяются в телекоммуникациях гражданского и специального назначения, в средствах связи, РЛС, а так же военной, авиационной и аэрокосмической отраслях промышленности).

FORSTAR®

Телефон: 8 (812) 309-75-97 (многоканальный)
Факс: 8 (812) 320-03-32
Электронная почта: ocean@oceanchips.ru
Web: http://oceanchips.ru/
Адрес: 198099, г. Санкт-Петербург, ул. Калинина, д. 2, корп. 4, лит. А