Heatsink Encased Wirewound Power Resistors

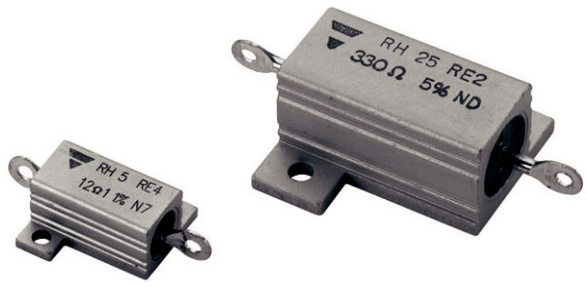

FEATURES

- 5 W to 50 W at 25 °C
- NF C 83-210
- CECC 40 203
- High stability < 0.05 % year
- Low temperature coefficient typically ± 15 ppm/°C
- Wide range of values from 0.006 Ω to 130 kΩ
- Termination = Sn/Ag/Cu
- Material categorization: For definitions of compliance please see www.vishay.com/doc?99912

Pb-free
RoHS COMPLIANT

Encased in a compact and light heatsink offering complete environmental protection, great mechanical strength and easy mounting. Non inductive versions can be supplied under the RHNI designation (please indicate required specifications and frequency range upon ordering).

NF F 16101, 10/1988 and 16102, 04/1992: Not applicable (our parts contain less than 10 g of combustible materials).

DIMENSIONS in millimeters

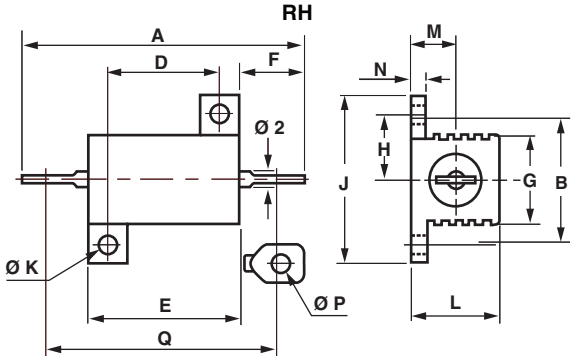

SERIES	A	B ± 0.2	D ± 0.2	E ± 0.5	F	G ± 1	H ± 0.7	J ± 0.5	Ø K ± 0.1	L MAX.	M ± 0.5	N ± 0.3	Ø P MIN.	Q	WEIGHT g
RH5	28.5 ± 1.5	12.5	11.3	16.3	6.8 ± 1.5	8.5	6.2	16.4	2.4	8.9	4.3	1.6	2.1	25.3 ± 1.5	4
RH10	35.5 ± 1.5	15.9	14	19	7.9 ± 1.5	11	7.9	20.6	2.4	11	5.6	2	2.1	30.6 ± 1.5	6.4
RH25	49 ± 1.3	19.8	18.3	28	11.1 ± 1.5	14	9.9	27.5	3.2	15	8	2.4	2.1	44.6 ± 1.3	16.1
RH50	70.2 ± 1.4	21.4	39.7	50	11 ± 1.2	14	10.7	29.4	3.2	15	8	2.4	2.1	66.5 ± 1.4	28.6

STANDARD ELECTRICAL SPECIFICATIONS

MODEL	RESISTANCE RANGE Ω	RATED POWER $P_{25\,°C}$ W	TOLERANCE ± %
RH5	0.01 to12K	10	0.5, 1, 2, 5
RH10	0.006 to 20K	12.5	0.5, 1, 2, 5
RH25	0.006 to 62K	25	0.5, 1, 2, 5
RH50	0.006 to 130K	50	0.5, 1, 2, 5

Note

- Undergoes European Quality Insurance System (CECC)

For technical questions, contact: sferfixedresistors@vishay.com
THIS DOCUMENT IS SUBJECT TO CHANGE WITHOUT NOTICE. THE PRODUCTS DESCRIBED HEREIN AND THIS DOCUMENT ARE SUBJECT TO SPECIFIC DISCLAIMERS, SET FORTH AT www.vishay.com/doc?91000

TECHNICAL SPECIFICATIONS

VISHAY SFERNICE MODEL AND STYLE			RH5	RH10	RH25	RH50
NF C 83-210 (CECC 40 203)			RE4	RE1	RE2	RE3
POWER RATING Chassis Mounted Resistors	MIL Limits	25 °C	5W	10 W	20 W	30 W
		70 °C	4 W	8 W	16 W	24 W
413 cm² for RH5 and RH10 536 cm² for RH25 and RH50	Vishay Sfernice Limits	25 °C	10 W	12.5 W	25 W	50 W
		70 °C	8 W	10 W	20 W	40 W
Unmounted Resistors	Vishay Sfernice Limits	25 °C	4 W	6 W	9W	12 W
		70 °C	3.2 W	4.8 W	7.2 W	9.6 W
Rated Maximum Voltage (V_{RMS})			160 V	250 V	550 V	1285 V
Dielectric Strength V_{RMS}			1000 V	1500 V	2500 V	2500 V
	Vishay Sfernice		0.01 Ω 12 kΩ	0.006 Ω 20 kΩ	0.006 Ω 62 kΩ	0.006 Ω 130 kΩ
	NF C 83-210		0.1 Ω 2.7 kΩ	0.1 Ω 4.99 kΩ	0.1 Ω 11.8 kΩ	0.1 Ω 33.2 kΩ
Minimum Ohmic Values in Relation to Tolerance	E 96	± 0.1 %	1 Ω		1 Ω	
	E 96	± 0.5 %	0.1 Ω		0.1 Ω	
	E 96	± 1 %	0.1 Ω		0.05 Ω	
	E 48	± 2 %	0.01 Ω		0.01 Ω	
	E 24	± 5 %	0.01 Ω		0.01 Ω	
	E 12	± 10 %	0.01 Ω	0.008 Ω	0.006 Ω	

Note

- Undergoes European Quality Insurance System (CECC)

PERFORMANCE

MIL-R-18546 D / NF C 83-210					TYPICAL DRIFTS
TESTS	CONDITIONS			REQUIREMENTS	
Operating Temperature Range	- 55 °C + 200 °C			-	-
Momentary Overload	5 P_r/5 s			± (0.25 % + 0.05 Ω)	± (0.1 % + 0.05 Ω)
Climatic Sequence	- 55 °C + 200 °C 5 cycles			± (0.25 % + 0.05 Ω)	± (0.1 % + 0.05 Ω)
Load Life Test at High Temperature	2 h at + 275 °C			± (1 % + 0.05 Ω) Ins. resistance ≥ 1 GΩ	± (0.1 % + 0.05 Ω)
Humidity (Steady State)	56 days			± (1 % + 0.05) Ins. resistance ≥ 100 MΩ	± (0.5 % + 0.05 Ω)
Resistance to Moisture	Climatic sequences test, with load and polarisation			± (1 % + 0.05 Ω)	± (0.5 % + 0.05 Ω)
Temperature Coefficient	5 Ω to 10 Ω > 10 Ω			± 50 ppm/°C ± 25 ppm/°C	± 15 ppm/°C
Load Life at Maximum Temperature	1000 h 25 °C	P_nMIL	Vishay	± (1 % + 0.05 Ω)	± (0.1 % + 0.05 Ω)
	200 °C	30 % of P_n	Sfernice	Ins. resistance ≥ 1 GΩ	± (0.5 % + 0.05 Ω)

MOMENTARY OVERLOAD

1. Momentary overload (> 2 s):
See example in table below. In all cases, it should be understood that:
- The 12 P_n overload applies only to ohmic values 0.1.
- The overload voltage shall not be higher than that used for the dielectric strength test (see Standard Electrical Specifications).

2. Short time overload (< 2 s):
For times shorter than 2 s, higher overloads can be sustained in some cases. Consult Vishay Sfernice.

POWER LOADING	DURATION
2.5 P_n	10 s
5 P_n	5 s
12 P_n	2 s

For technical questions, contact: sferfixedresistors@vishay.com
THIS DOCUMENT IS SUBJECT TO CHANGE WITHOUT NOTICE. THE PRODUCTS DESCRIBED HEREIN AND THIS DOCUMENT ARE SUBJECT TO SPECIFIC DISCLAIMERS, SET FORTH AT www.vishay.com/doc?91000

POWER RATING

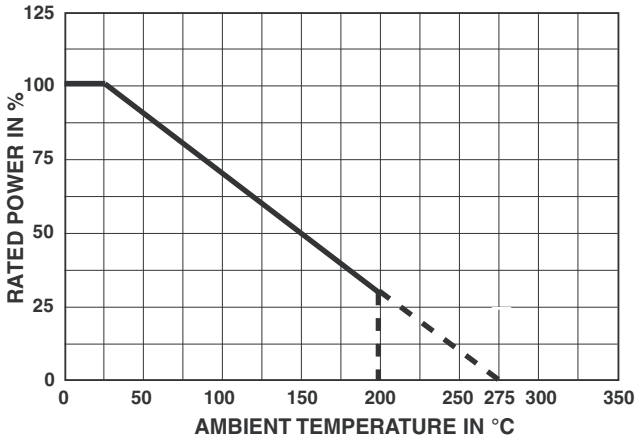

TEMPERATURE RISE

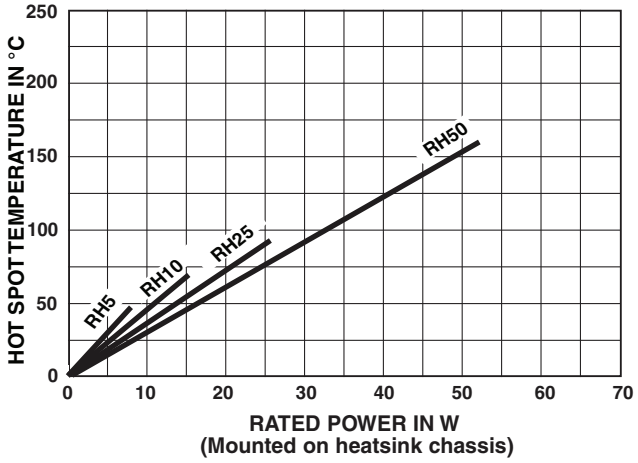

MARKING

Vishay Sfernice trademark, model, style, CECC style (if applicable) nominal resistance (in Ω), tolerance (in %), manufacturing date.

PACKAGING
Bag of 10 units

ORDERING INFORMATION

RH	05	N	18R00	J	S03
MODEL	STYLE	NON INDUCTIVE WINDING Optional	OHMIC VALUE	TOLERANCE	PACKAGING

GLOBAL PART NUMBER INFORMATION

R	H	5	0	3	3	0	0	1	J	S	0	3

GLOBAL MODEL	SIZE	OPTION	OHMIC VALUE	TOLERANCE	PACKAGING	SPECIAL
RH	**05** **10** **25** **50**	**N** = Non inductive winding	The first four digits are significant figures and the last digit specifies the number of zeros to follow. R designates decimal point. **33001** = 33 kΩ **680R0** = 680 Ω **20301** = 20.3 kΩ **88R88** = 88.88 Ω ...	**D** = 0.5 % **F** = 1 % **G** = 2 % **J** = 5 %	**Standard Packaging:** S03 = Bag, 10 pieces	As applicable **Ex** = HDX

For technical questions, contact: sferfixedresistors@vishay.com
THIS DOCUMENT IS SUBJECT TO CHANGE WITHOUT NOTICE. THE PRODUCTS DESCRIBED HEREIN AND THIS DOCUMENT ARE SUBJECT TO SPECIFIC DISCLAIMERS, SET FORTH AT www.vishay.com/doc?91000

Disclaimer

ALL PRODUCT, PRODUCT SPECIFICATIONS AND DATA ARE SUBJECT TO CHANGE WITHOUT NOTICE TO IMPROVE RELIABILITY, FUNCTION OR DESIGN OR OTHERWISE.

Vishay Intertechnology, Inc., its affiliates, agents, and employees, and all persons acting on its or their behalf (collectively, "Vishay"), disclaim any and all liability for any errors, inaccuracies or incompleteness contained in any datasheet or in any other disclosure relating to any product.

Vishay makes no warranty, representation or guarantee regarding the suitability of the products for any particular purpose or the continuing production of any product. To the maximum extent permitted by applicable law, Vishay disclaims (i) any and all liability arising out of the application or use of any product, (ii) any and all liability, including without limitation special, consequential or incidental damages, and (iii) any and all implied warranties, including warranties of fitness for particular purpose, non-infringement and merchantability.

Statements regarding the suitability of products for certain types of applications are based on Vishay's knowledge of typical requirements that are often placed on Vishay products in generic applications. Such statements are not binding statements about the suitability of products for a particular application. It is the customer's responsibility to validate that a particular product with the properties described in the product specification is suitable for use in a particular application. Parameters provided in datasheets and/or specifications may vary in different applications and performance may vary over time. All operating parameters, including typical parameters, must be validated for each customer application by the customer's technical experts. Product specifications do not expand or otherwise modify Vishay's terms and conditions of purchase, including but not limited to the warranty expressed therein.

Except as expressly indicated in writing, Vishay products are not designed for use in medical, life-saving, or life-sustaining applications or for any other application in which the failure of the Vishay product could result in personal injury or death. Customers using or selling Vishay products not expressly indicated for use in such applications do so at their own risk. Please contact authorized Vishay personnel to obtain written terms and conditions regarding products designed for such applications.

No license, express or implied, by estoppel or otherwise, to any intellectual property rights is granted by this document or by any conduct of Vishay. Product names and markings noted herein may be trademarks of their respective owners.

Material Category Policy

Vishay Intertechnology, Inc. hereby certifies that all its products that are identified as RoHS-Compliant fulfill the definitions and restrictions defined under Directive 2011/65/EU of The European Parliament and of the Council of June 8, 2011 on the restriction of the use of certain hazardous substances in electrical and electronic equipment (EEE) - recast, unless otherwise specified as non-compliant.

Please note that some Vishay documentation may still make reference to RoHS Directive 2002/95/EC. We confirm that all the products identified as being compliant to Directive 2002/95/EC conform to Directive 2011/65/EU.

Vishay Intertechnology, Inc. hereby certifies that all its products that are identified as Halogen-Free follow Halogen-Free requirements as per JEDEC JS709A standards. Please note that some Vishay documentation may still make reference to the IEC 61249-2-21 definition. We confirm that all the products identified as being compliant to IEC 61249-2-21 conform to JEDEC JS709A standards.

OCEAN CHIPS
Океан Электроники
Поставка электронных компонентов

Компания «Океан Электроники» предлагает заключение долгосрочных отношений при поставках импортных электронных компонентов на взаимовыгодных условиях!

Наши преимущества:

- Поставка оригинальных импортных электронных компонентов напрямую с производств Америки, Европы и Азии, а так же с крупнейших складов мира;
- Широкая линейка поставок активных и пассивных импортных электронных компонентов (более 30 млн. наименований);
- Поставка сложных, дефицитных, либо снятых с производства позиций;
- Оперативные сроки поставки под заказ (от 5 рабочих дней);
- Экспресс доставка в любую точку России;
- Помощь Конструкторского Отдела и консультации квалифицированных инженеров;
- Техническая поддержка проекта, помощь в подборе аналогов, поставка прототипов;
- Поставка электронных компонентов под контролем ВП;
- Система менеджмента качества сертифицирована по Международному стандарту ISO 9001;
- При необходимости вся продукция военного и аэрокосмического назначения проходит испытания и сертификацию в лаборатории (по согласованию с заказчиком);
- Поставка специализированных компонентов военного и аэрокосмического уровня качества (Xilinx, Altera, Analog Devices, Intersil, Interpoint, Microsemi, Actel, Aeroflex, Peregrine, VPT, Syfer, Eurofarad, Texas Instruments, MS Kennedy, Miteq, Cobham, E2V, MA-COM, Hittite, Mini-Circuits, General Dynamics и др.);

Компания «Океан Электроники» является официальным дистрибьютором и эксклюзивным представителем в России одного из крупнейших производителей разъемов военного и аэрокосмического назначения **«JONHON»**, а так же официальным дистрибьютором и эксклюзивным представителем в России производителя высокотехнологичных и надежных решений для передачи СВЧ сигналов **«FORSTAR»**.

AVIC JONHON

«JONHON» (основан в 1970 г.)

Разъемы специального, военного и аэрокосмического назначения:

(Применяются в военной, авиационной, аэрокосмической, морской, железнодорожной, горно- и нефтедобывающей отраслях промышленности)

«FORSTAR» (основан в 1998 г.)

ВЧ соединители, коаксиальные кабели, кабельные сборки и микроволновые компоненты:

(Применяются в телекоммуникациях гражданского и специального назначения, в средствах связи, РЛС, а так же военной, авиационной и аэрокосмической отраслях промышленности).

FORSTAR®

Телефон: 8 (812) 309-75-97 (многоканальный)
Факс: 8 (812) 320-03-32
Электронная почта: ocean@oceanchips.ru
Web: http://oceanchips.ru/
Адрес: 198099, г. Санкт-Петербург, ул. Калинина, д. 2, корп. 4, лит. А