CAT24AA04, CAT24AA08

4-Kb and 8-Kb I²C CMOS Serial EEPROM

ON Semiconductor®

http://onsemi.com

SOIC−8
W SUFFIX
CASE 751BD

TSOT−23
TB SUFFIX
CASE 419AE

Description

The CAT24AA04/24AA08 are 4−Kb and 8−Kb CMOS Serial EEPROM devices internally organized as 512x8/1024x8 bits.

They feature a 16−byte page write buffer and support 100 kHz, 400 kHz and 1 MHz I²C protocols.

In contrast to the CAT24C04/24C08, the CAT24AA04/24AA08 have no external address pins, and are therefore suitable in applications that require a single CAT24AA04/08 on the I²C bus.

Features

- Standard and Fast I²C Protocol Compatible
- Supports 1 MHz Clock Frequency
- 1.7 V to 5.5 V Supply Voltage Range
- 16−Byte Page Write Buffer
- Hardware Write Protection for Entire Memory
- Schmitt Triggers and Noise Suppression Filters on I²C Bus Inputs (SCL and SDA)
- Low Power CMOS Technology
- 1,000,000 Program/Erase Cycles
- 100 Year Data Retention
- Industrial Temperature Range
- TSOT−23 5−lead and SOIC 8−lead Packages
- These Devices are Pb−Free, Halogen Free/BFR Free, and RoHS Compliant

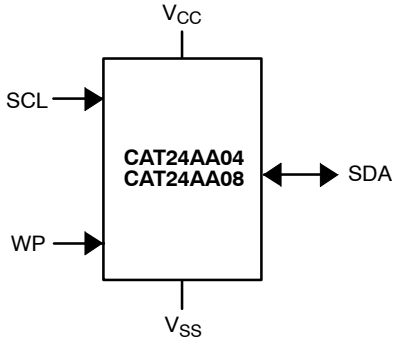

Figure 1. Functional Symbol

PIN CONFIGURATIONS

SOIC

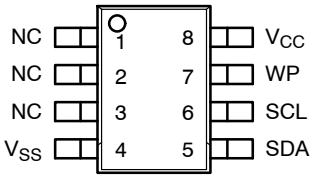

(Top View)

TSOT−23

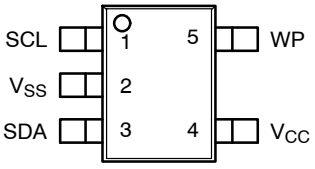

(Top View)

PIN FUNCTION

Pin Name	Function
SDA	Serial Data/Address
SCL	Clock Input
WP	Write Protect
V_{CC}	Power Supply
V_{SS}	Ground
NC	No Connect

ORDERING INFORMATION

See detailed ordering and shipping information in the package dimensions section on page 10 of this data sheet.

© Semiconductor Components Industries, LLC, 2009

Table 1. ABSOLUTE MAXIMUM RATINGS

Parameters	Ratings	Units
Storage Temperature	–65 to +150	°C
Voltage on any Pin with Respect to Ground (Note 1)	–0.5 to +6.5	V

Stresses exceeding Maximum Ratings may damage the device. Maximum Ratings are stress ratings only. Functional operation above the Recommended Operating Conditions is not implied. Extended exposure to stresses above the Recommended Operating Conditions may affect device reliability.

1. The DC input voltage on any pin should not be lower than −0.5 V or higher than V_{CC} + 0.5 V. During transitions, the voltage on any pin may undershoot to no less than −1.5 V or overshoot to no more than V_{CC} + 1.5 V, for periods of less than 20 ns.

Table 2. RELIABILITY CHARACTERISTICS (Note 2)

Symbol	Parameter	Min	Units
N_{END} (Note 3)	Endurance	1,000,000	Program/Erase Cycles
T_{DR}	Data Retention	100	Years

2. These parameters are tested initially and after a design or process change that affects the parameter according to appropriate AEC−Q100 and JEDEC test methods.
3. Page Mode @ 25°C

Table 3. D.C. OPERATING CHARACTERISTICS (V_{CC} = 1.7 V to 5.5 V, T_A = −40°C to 85°C, unless otherwise specified.)

Symbol	Parameter	Test Conditions	Min	Max	Units
I_{CCR}	Read Current	Read, f_{SCL} = 400 kHz		0.5	mA
I_{CCW}	Write Current	Write, f_{SCL} = 400 kHz		1	mA
I_{SB}	Standby Current	All I/O Pins at GND or V_{CC}		1	μA
I_L	I/O Pin Leakage	Pin at GND or V_{CC}		1	μA
V_{IL}	Input Low Voltage		−0.5	V_{CC} x 0.3	V
V_{IH}	Input High Voltage		V_{CC} x 0.7	V_{CC} + 0.5	V
V_{OL1}	Output Low Voltage	$V_{CC} \geq$ 2.5 V, I_{OL} = 3.0 mA		0.4	V
V_{OL2}	Output Low Voltage	V_{CC} < 2.5 V, I_{OL} = 1.0 mA		0.2	V

Table 4. PIN IMPEDANCE CHARACTERISTICS (V_{CC} = 1.7 V to 5.5 V, T_A = −40°C to 85°C, unless otherwise specified.)

Symbol	Parameter	Conditions	Max	Units
C_{IN} (Note 2)	SDA I/O Pin Capacitance	V_{IN} = 0 V	8	pF
C_{IN} (Note 2)	Input Capacitance (other pins)	V_{IN} = 0 V	6	pF
I_{WP} (Note 4)	WP Input Current	V_{IN} < 0.5xV_{CC}, V_{CC} = 5.5 V	200	μA
		V_{IN} < 0.5xV_{CC}, V_{CC} = 3.3 V	150	
		V_{IN} < 0.5xV_{CC}, V_{CC} = 1.8 V	100	
		V_{IN} > 0.5xV_{CC}	1	

4. When not driven, the WP pin is pulled down to GND internally. For improved noise immunity, the internal pull−down is relatively strong; therefore the external driver must be able to supply the pull−down current when attempting to drive the input HIGH. To conserve power, as the input level exceeds the trip point of the CMOS input buffer (~ 0.5 x V_{CC}), the strong pull−down reverts to a weak current source.

Table 5. A.C. CHARACTERISTICS (Note 5) (V_{CC} = 1.7 V to 5.5 V, T_A = −40°C to 85°C, unless otherwise specified.)

Symbol	Parameter	Standard V_{CC} = 1.7 V – 5.5 V		Fast V_{CC} = 1.7 V – 5.5 V		1 MHz V_{CC} = 2.5 V – 5.5 V		Units
		Min	Max	Min	Max	Min	Max	
F_{SCL}	Clock Frequency		100		400		1000	kHz
$t_{HD:STA}$	START Condition Hold Time	4		0.6		0.25		μs
t_{LOW}	Low Period of SCL Clock	4.7		1.3		0.5		μs
t_{HIGH}	High Period of SCL Clock	4		0.6		0.5		μs
$t_{SU:STA}$	START Condition Setup Time	4.7		0.6		0.25		μs
$t_{HD:DAT}$	Data In Hold Time	0		0		0		ns
$t_{SU:DAT}$	Data In Setup Time	250		100		100		ns
t_R (Note 6)	SDA and SCL Rise Time		1000		300		300	ns
t_F (Note 6)	SDA and SCL Fall Time		300		300		100	ns
$t_{SU:STO}$	STOP Condition Setup Time	4		0.6		0.25		μs
t_{BUF}	Bus Free Time Between STOP and START	4.7		1.3		0.5		μs
t_{AA}	SCL Low to Data Out Valid		3.5		0.9		0.4	μs
t_{DH}	Data Out Hold Time	100		50		50		ns
T_i (Note 6)	Noise Pulse Filtered at SCL and SDA Inputs		100		100		100	ns
$t_{SU:WP}$	WP Setup Time	0		0		0		μs
$t_{HD:WP}$	WP Hold Time	2.5		2.5		1		μs
t_{WR}	Write Cycle Time		5		5		5	ms
t_{PU} (Notes 6, 7)	Power−up to Ready Mode		1		1		1	ms

5. Test conditions according to “A.C. Test Conditions” table.
6. Tested initially and after a design or process change that affects this parameter.
7. t_{PU} is the delay between the time V_{CC} is stable and the device is ready to accept commands.

Table 6. A.C. TEST CONDITIONS

Input Levels	0.2 x V_{CC} to 0.8 x V_{CC}
Input Rise and Fall Times	≤ 50 ns
Input Reference Levels	0.3 x V_{CC}, 0.7 x V_{CC}
Output Reference Levels	0.5 x V_{CC}
Output Load	Current Source: I_{OL} = 3 mA (V_{CC} ≥ 2.5 V); I_{OL} = 1 mA (V_{CC} < 2.5 V); C_L = 100 pF

Power−On Reset (POR)

Each CAT24AA04/08 incorporates Power−On Reset (POR) circuitry which protects the internal logic against powering up in the wrong state. The device will power up into Standby mode after V_{CC} exceeds the POR trigger level and will power down into Reset mode when V_{CC} drops below the POR trigger level.

This bi−directional POR behavior protects the device against brown−out failure, following a temporary loss of power.

Pin Description

SCL: The Serial Clock input pin accepts the clock signal generated by the Master.

SDA: The Serial Data I/O pin accepts input data and delivers output data. In transmit mode, this pin is open drain. Data is acquired on the positive edge, and delivered on the negative edge of SCL.

WP: When the Write Protect input pin is forced HIGH by an external source, all write operations are inhibited. When the pin is not driven by an external source, it is pulled LOW internally.

Functional Description

The CAT24AA04/08 supports the Inter−Integrated Circuit (I^2C) Bus protocol. The protocol relies on the use of a Master device, which provides the clock and directs bus traffic, and Slave devices which execute requests. The CAT24AA04/08 operates as a Slave device. Both Master and Slave can transmit or receive, but only the Master can assign those roles.

I^2C Bus Protocol

The 2−wire I^2C bus consists of two lines, SCL and SDA, connected to the V_{CC} supply via pull−up resistors. The Master provides the clock to the SCL line, and the Master and Slaves drive the SDA line. A ‘0’ is transmitted by pulling a line LOW and a ‘1’ by releasing it HIGH. Data transfer may be initiated only when the bus is not busy (see A.C. Characteristics). During data transfer, SDA must remain stable while SCL is HIGH.

START/STOP Condition

An SDA transition while SCL is HIGH creates a START or STOP condition (Figure 2). A START is generated by a HIGH to LOW transition, while a STOP is generated by a LOW to HIGH transition. The START acts like a wake−up call. Absent a START, no Slave will respond to the Master. The STOP completes all commands.

Device Addressing

The Master addresses a Slave by creating a START condition and then broadcasting an 8−bit Slave address (Figure 3). The four most significant bits of the Slave address are 1010 (Ah). The next three bits from the Slave address byte are assigned as shown in Figure 3, where a_9 and a_8 are internal address bits.The last bit, R/$\overline{W}$, instructs the Slave to either provide (1) or accept (0) data, i.e. it specifies a Read (1) or a Write (0) operation.

Acknowledge

During the 9th clock cycle following every byte sent onto the bus, the transmitter releases the SDA line, allowing the receiver to respond. The receiver then either acknowledges (ACK) by pulling SDA LOW, or does not acknowledge (NoACK) by letting SDA stay HIGH (Figure 4). Bus timing is illustrated in Figure 5.

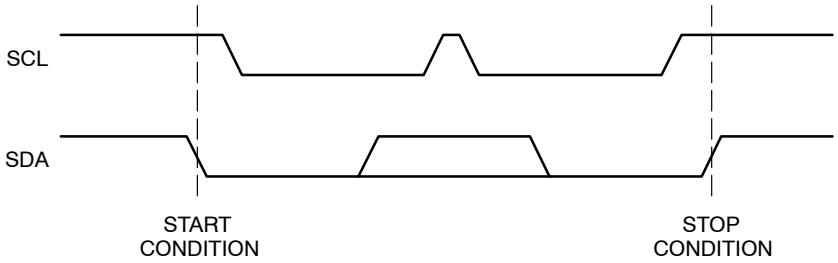

Figure 2. Start/Stop Timing

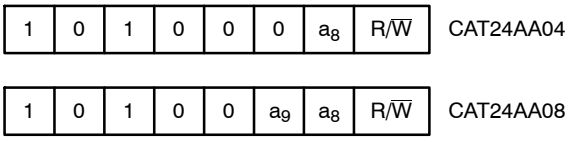

Figure 3. Slave Address Bits

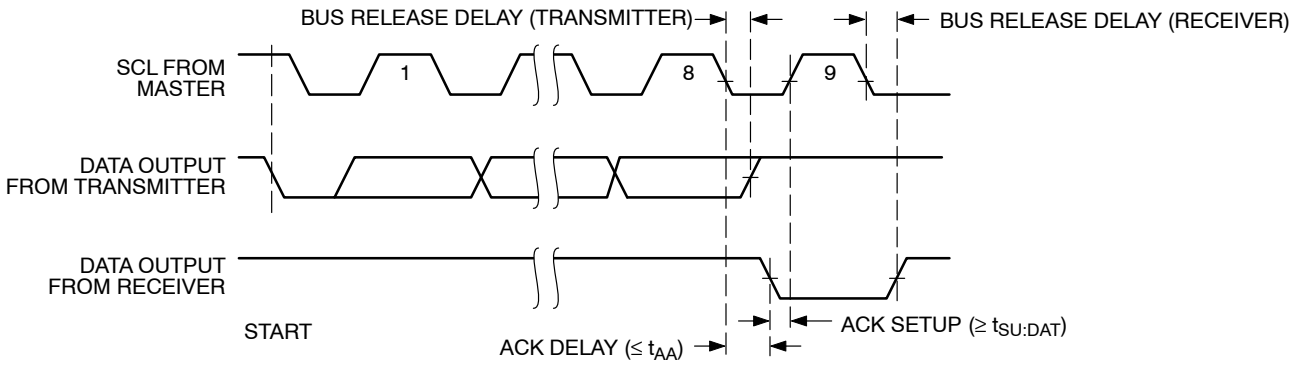

Figure 4. Acknowledge Timing

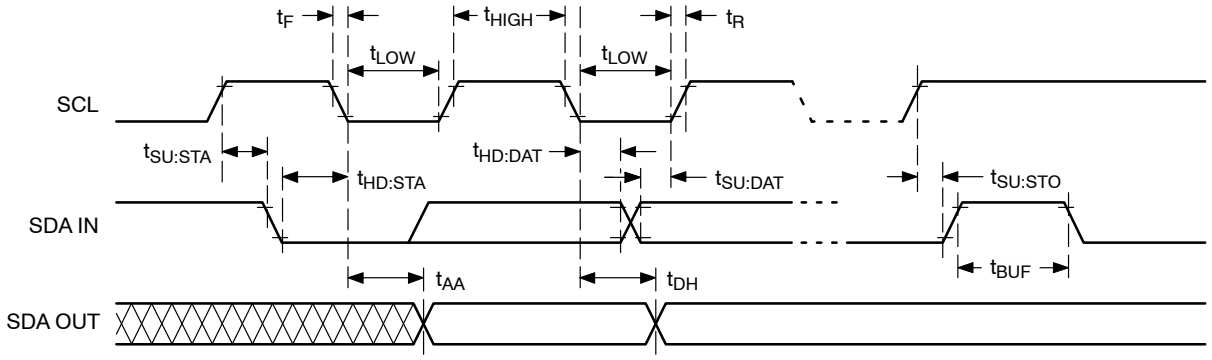

Figure 5. Bus Timing

WRITE OPERATIONS

Byte Write

To write data to memory, the Master creates a START condition on the bus and then broadcasts a Slave address with the R/$\overline{W}$ bit set to '0'. The Master then sends an address byte and a data byte and concludes the session by creating a STOP condition on the bus. The Slave responds with ACK after every byte sent by the Master (Figure 6). The STOP starts the internal Write cycle, and while this operation is in progress (t_{WR}), the SDA output is tri−stated and the Slave does not acknowledge the Master (Figure 7).

Page Write

The Byte Write operation can be expanded to Page Write, by sending more than one data byte to the Slave before issuing the STOP condition (Figure 8). Up to 16 distinct data bytes can be loaded into the internal Page Write Buffer starting at the address provided by the Master. The page address is latched, and as long as the Master keeps sending data, the internal byte address is incremented up to the end of page, where it then wraps around (within the page). New data can therefore replace data loaded earlier. Following the STOP, data loaded during the Page Write session will be written to memory in a single internal Write cycle (t_{WR}).

Acknowledge Polling

The acknowledge (ACK) polling routine can be used to take advantage of the typical write cycle time. Once the stop condition is issued to indicate the end of the host's write operation, the CAT24AA04/08 initiates the internal write cycle. The ACK polling can be initiated immediately. This involves issuing the start condition followed by the slave address for a write operation. If the CAT24AA04/08 is still busy with the write operation, NoACK will be returned. If the CAT24AA04/08 device has completed the internal write operation, an ACK will be returned and the host can then proceed with the next read or write operation.

Hardware Write Protection

With the WP pin held HIGH, the entire memory is protected against Write operations. If the WP pin is left floating or is grounded, it has no impact on the Write operation. The state of the WP pin is strobed on the last falling edge of SCL immediately preceding the 1st data byte (Figure 9). If the WP pin is HIGH during the strobe interval, the Slave will not acknowledge the data byte and the Write request will be rejected.

Delivery State

The CAT24AA04/08 is shipped erased, i.e., all bytes are FFh.

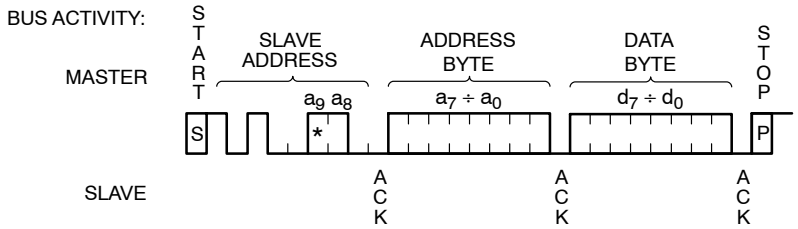

*a_9 = 0 for CAT24AA04

Figure 6. Byte Write Sequence

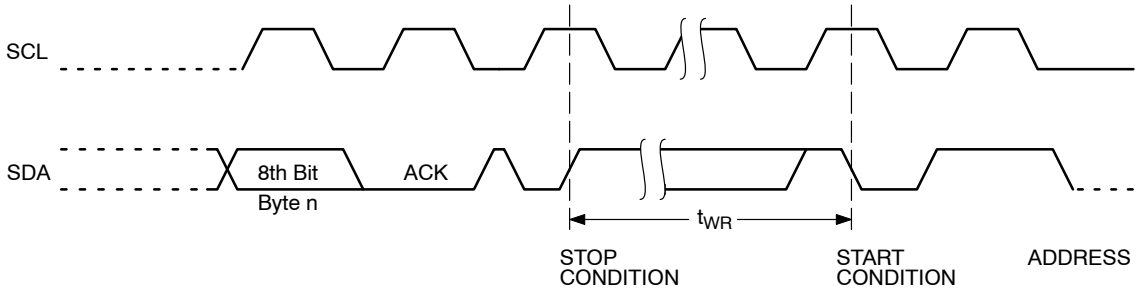

Figure 7. Write Cycle Timing

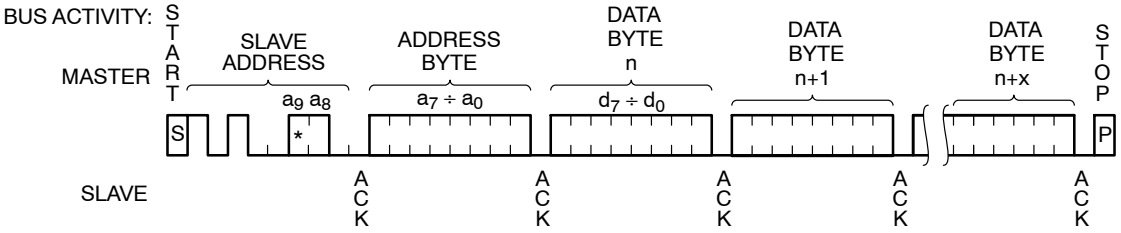

n = 1
x ≤ 15

*a_9 = 0 for CAT24AA04

Figure 8. Page Write Sequence

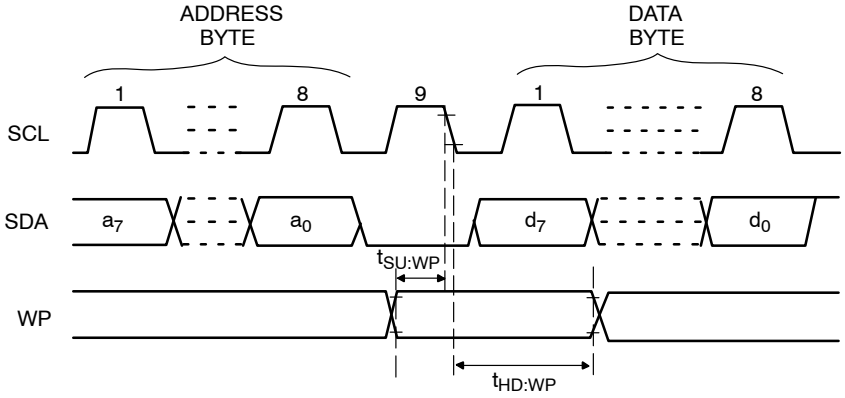

Figure 9. WP Timing

READ OPERATIONS

Immediate Read

To read data from memory, the Master creates a START condition on the bus and then broadcasts a Slave address with the R/$\overline{W}$ bit set to ‘1’. The Slave responds with ACK and starts shifting out data residing at the current address. After receiving the data, the Master responds with NoACK and terminates the session by creating a STOP condition on the bus (Figure 10). The Slave then returns to Standby mode.

Selective Read

To read data residing at a specific address, the selected address must first be loaded into the internal address register. This is done by starting a Byte Write sequence, whereby the Master creates a START condition, then broadcasts a Slave address with the R/$\overline{W}$ bit set to ‘0’ and then sends an address byte to the Slave. Rather than completing the Byte Write sequence by sending data, the Master then creates a START condition and broadcasts a Slave address with the R/$\overline{W}$ bit set to ‘1’. The Slave responds with ACK after every byte sent by the Master and then sends out data residing at the selected address. After receiving the data, the Master responds with NoACK and then terminates the session by creating a STOP condition on the bus (Figure 11).

Sequential Read

If, after receiving data sent by the Slave, the Master responds with ACK, then the Slave will continue transmitting until the Master responds with NoACK followed by STOP (Figure 12). During Sequential Read the internal byte address is automatically incremented up to the end of memory, where it then wraps around to the beginning of memory.

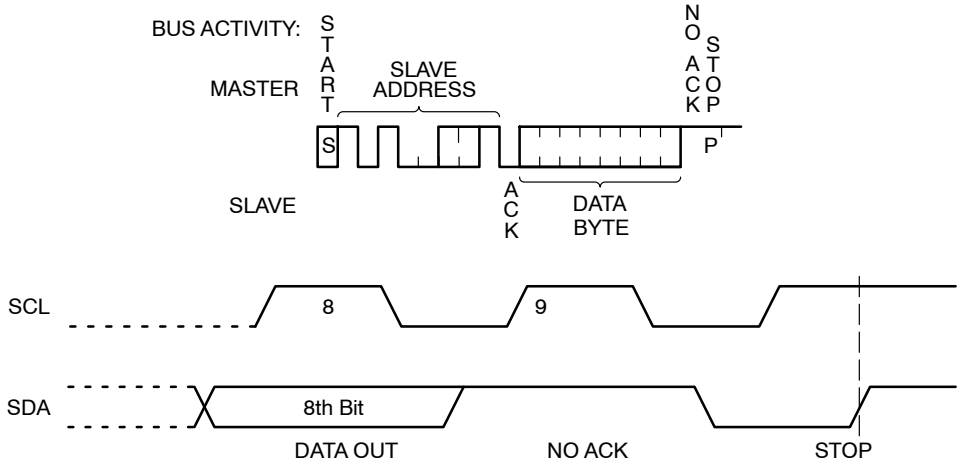

Figure 10. Immediate Read Sequence and Timing

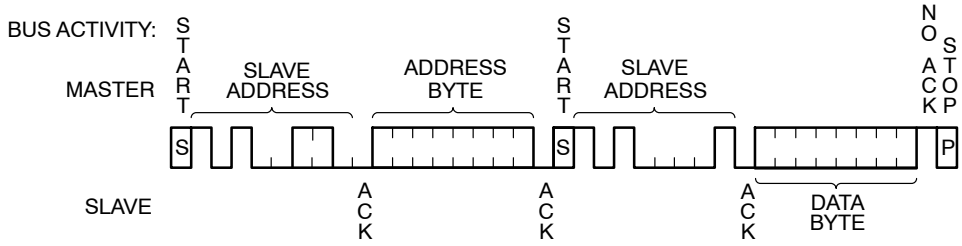

Figure 11. Selective Read Sequence

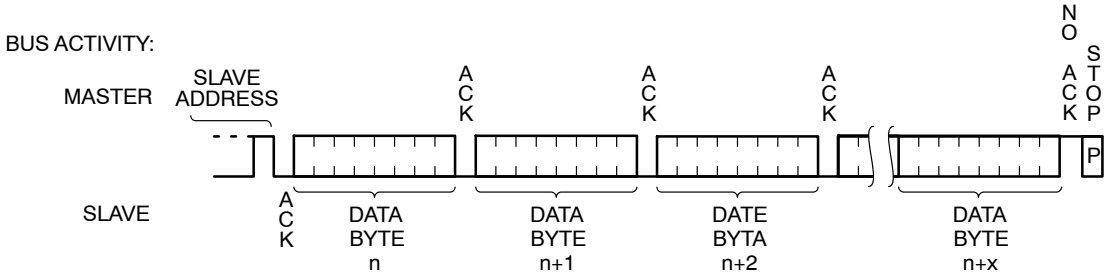

Figure 12. Sequential Read Sequence

PACKAGE DIMENSIONS

SOIC 8, 150 mils
CASE 751BD−01
ISSUE O

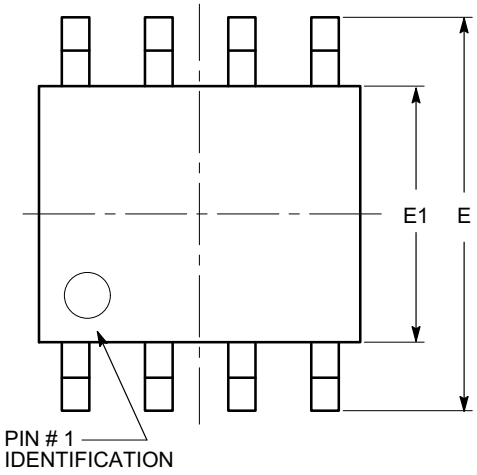

TOP VIEW

SYMBOL	MIN	NOM	MAX
A	1.35		1.75
A1	0.10		0.25
b	0.33		0.51
c	0.19		0.25
D	4.80		5.00
E	5.80		6.20
E1	3.80		4.00
e		1.27 BSC	
h	0.25		0.50
L	0.40		1.27
θ	0º		8º

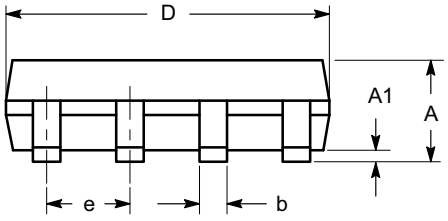

SIDE VIEW

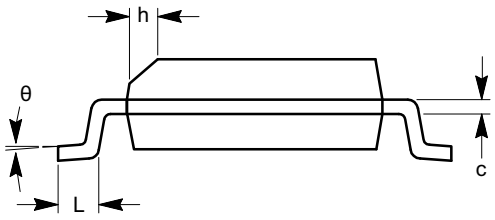

END VIEW

Notes:
(1) All dimensions are in millimeters. Angles in degrees.
(2) Complies with JEDEC MS-012.

PACKAGE DIMENSIONS

TSOT−23, 5 LEAD
CASE 419AE−01
ISSUE O

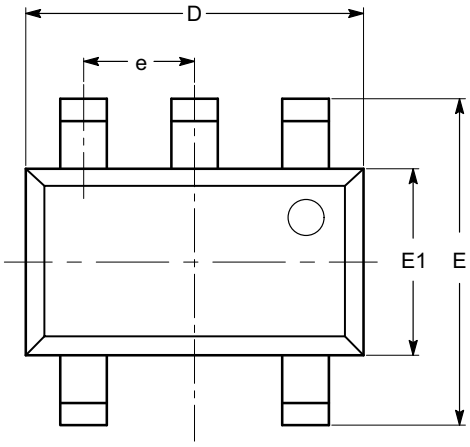

TOP VIEW

SYMBOL	MIN	NOM	MAX
A			1.00
A1	0.01	0.05	0.10
A2	0.80	0.87	0.90
b	0.30		0.45
c	0.12	0.15	0.20
D	2.90 BSC		
E	2.80 BSC		
E1	1.60 BSC		
e	0.95 TYP		
L	0.30	0.40	0.50
L1	0.60 REF		
L2	0.25 BSC		
θ	0º		8º

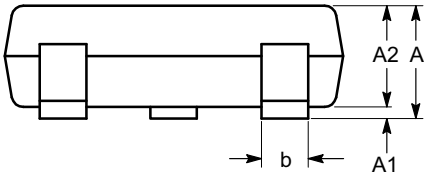

SIDE VIEW

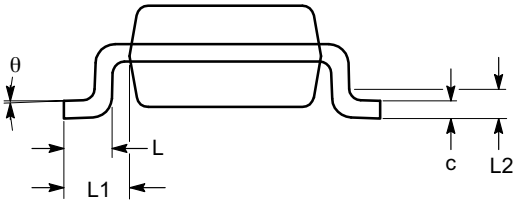

END VIEW

Notes:
(1) All dimensions are in millimeters. Angles in degrees.
(2) Complies with JEDEC MO-193.

Example of Ordering Information

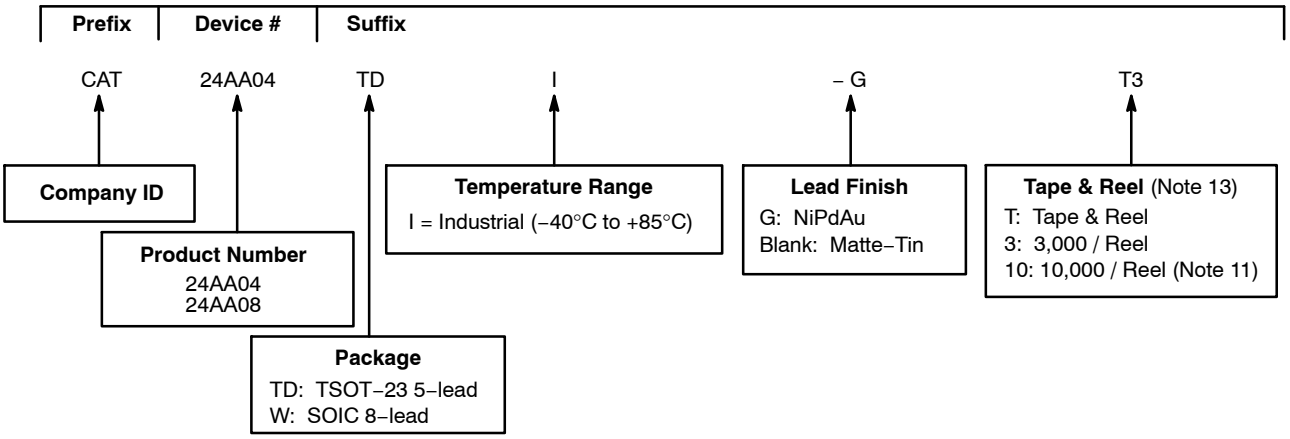

8. All packages are RoHS-compliant (Lead-free, Halogen-free).
9. The standard lead finish is NiPdAu.
10. The device used in the above example is a CAT24AA04TDI–GT3 (TSOT–23 5–lead, Industrial Temperature, NiPdAu, Tape & Reel, 3,000/Reel).
11. The 10,000/Reel option is only available for the TSOT–23 5–lead package.
12. For additional package and temperature options, please contact your nearest ON Semiconductor Sales office.
13. For information on tape and reel specifications, including part orientation and tape sizes, please refer to our Tape and Reel Packaging Specifications Brochure, BRD8011/D.

ON Semiconductor is licensed by Philips Corporation to carry the I^2C Bus Protocol.

ON Semiconductor and ON are registered trademarks of Semiconductor Components Industries, LLC (SCILLC). SCILLC reserves the right to make changes without further notice to any products herein. SCILLC makes no warranty, representation or guarantee regarding the suitability of its products for any particular purpose, nor does SCILLC assume any liability arising out of the application or use of any product or circuit, and specifically disclaims any and all liability, including without limitation special, consequential or incidental damages. “Typical” parameters which may be provided in SCILLC data sheets and/or specifications can and do vary in different applications and actual performance may vary over time. All operating parameters, including “Typicals” must be validated for each customer application by customer’s technical experts. SCILLC does not convey any license under its patent rights nor the rights of others. SCILLC products are not designed, intended, or authorized for use as components in systems intended for surgical implant into the body, or other applications intended to support or sustain life, or for any other application in which the failure of the SCILLC product could create a situation where personal injury or death may occur. Should Buyer purchase or use SCILLC products for any such unintended or unauthorized application, Buyer shall indemnify and hold SCILLC and its officers, employees, subsidiaries, affiliates, and distributors harmless against all claims, costs, damages, and expenses, and reasonable attorney fees arising out of, directly or indirectly, any claim of personal injury or death associated with such unintended or unauthorized use, even if such claim alleges that SCILLC was negligent regarding the design or manufacture of the part. SCILLC is an Equal Opportunity/Affirmative Action Employer. This literature is subject to all applicable copyright laws and is not for resale in any manner.

PUBLICATION ORDERING INFORMATION

LITERATURE FULFILLMENT:
Literature Distribution Center for ON Semiconductor
P.O. Box 5163, Denver, Colorado 80217 USA
Phone: 303–675–2175 or 800–344–3860 Toll Free USA/Canada
Fax: 303–675–2176 or 800–344–3867 Toll Free USA/Canada
Email: orderlit@onsemi.com

N. American Technical Support: 800–282–9855 Toll Free USA/Canada
Europe, Middle East and Africa Technical Support:
Phone: 421 33 790 2910
Japan Customer Focus Center
Phone: 81–3–5773–3850

ON Semiconductor Website: **www.onsemi.com**

Order Literature: http://www.onsemi.com/orderlit

For additional information, please contact your local Sales Representative

OCEAN CHIPS
Океан Электроники
Поставка электронных компонентов

Компания «Океан Электроники» предлагает заключение долгосрочных отношений при поставках импортных электронных компонентов на взаимовыгодных условиях!

Наши преимущества:

- Поставка оригинальных импортных электронных компонентов напрямую с производств Америки, Европы и Азии, а так же с крупнейших складов мира;
- Широкая линейка поставок активных и пассивных импортных электронных компонентов (более 30 млн. наименований);
- Поставка сложных, дефицитных, либо снятых с производства позиций;
- Оперативные сроки поставки под заказ (от 5 рабочих дней);
- Экспресс доставка в любую точку России;
- Помощь Конструкторского Отдела и консультации квалифицированных инженеров;
- Техническая поддержка проекта, помощь в подборе аналогов, поставка прототипов;
- Поставка электронных компонентов под контролем ВП;
- Система менеджмента качества сертифицирована по Международному стандарту ISO 9001;
- При необходимости вся продукция военного и аэрокосмического назначения проходит испытания и сертификацию в лаборатории (по согласованию с заказчиком);
- Поставка специализированных компонентов военного и аэрокосмического уровня качества (Xilinx, Altera, Analog Devices, Intersil, Interpoint, Microsemi, Actel, Aeroflex, Peregrine, VPT, Syfer, Eurofarad, Texas Instruments, MS Kennedy, Miteq, Cobham, E2V, MA-COM, Hittite, Mini-Circuits, General Dynamics и др.);

Компания «Океан Электроники» является официальным дистрибьютором и эксклюзивным представителем в России одного из крупнейших производителей разъемов военного и аэрокосмического назначения **«JONHON»**, а так же официальным дистрибьютором и эксклюзивным представителем в России производителя высокотехнологичных и надежных решений для передачи СВЧ сигналов **«FORSTAR»**.

AVIC JONHON

«JONHON» (основан в 1970 г.)

Разъемы специального, военного и аэрокосмического назначения:

(Применяются в военной, авиационной, аэрокосмической, морской, железнодорожной, горно- и нефтедобывающей отраслях промышленности)

«FORSTAR» (основан в 1998 г.)

ВЧ соединители, коаксиальные кабели, кабельные сборки и микроволновые компоненты:

(Применяются в телекоммуникациях гражданского и специального назначения, в средствах связи, РЛС, а так же военной, авиационной и аэрокосмической отраслях промышленности).

FORSTAR®

Телефон: 8 (812) 309-75-97 (многоканальный)
Факс: 8 (812) 320-03-32
Электронная почта: ocean@oceanchips.ru
Web: http://oceanchips.ru/
Адрес: 198099, г. Санкт-Петербург, ул. Калинина, д. 2, корп. 4, лит. А