AC Line Rated Ceramic Disc Capacitors Class X1, 440 V_{AC}, Class Y2, 300 V_{AC}

ADDITIONAL RESOURCES

3D Models Models

QUICK REFERENCE DATA				
DESCRIPTION	VALUE			
Ceramic Class	1		2	
Ceramic Dielectric	N750		Y5S, Y5U, Y5V	
Voltage (V_{AC})	300	440	300	440
Min. Capacitance (pF)	10		68	
Max. Capacitance (pF)	47		10 000	
Mounting	Radial			

OPERATING TEMPERATURE RANGE

-40 °C to +125 °C

TEMPERATURE CHARACTERISTICS

Class 1: N750 (U2J)
Class 2: Y5S, Y5U, Y5V

SECTIONAL SPECIFICATIONS

Climatic category (according to EN 60058-1)
Class 1 and class 2: 40/125/21

COATING

According to UL 94 V-0
Epoxy resin, isolating, flame retardant

APPROVALS

IEC 60384-14.4
UL 60384-14
DIN EN 60384-14
CSA E60384-1:03, CSA E60384-14:09
CQC11-471112

PACKAGING

Bulk, tape and reel, taped ammopack

FEATURES

- Complying with IEC 60384-14 4th edition
- High reliability
- Vertical (inline) kinked or straight leads
- Singlelayer AC disc safety capacitors
- Material categorization: for definitions of compliance please see www.vishay.com/doc?99912

Pb
e3
RoHS COMPLIANT
HALOGEN FREE
GREEN (5-2008)

APPLICATIONS

- X1, Y2 according to IEC 60384-14.4
- Across-the-line
- Line by-pass
- Antenna coupling

DESIGN

The capacitor consists of a ceramic disc which is silver plated on both sides. Connection leads are made of tin plated copper-clad steel having a diameter of 0.6 mm.

The capacitors may be supplied with vertical (inline) kinked leads having a lead spacing of 5.0 mm, 7.5 mm, 10.0 mm, or 12.5 mm. Encapsulation is made of flame retardant epoxy resin in accordance with UL 94 V-0.

CAPACITANCE RANGE

10 pF to 0.01 μF

RATED VOLTAGE U_R

IEC 60384-14 and UL 60384-14:
(X1): 440 V_{AC}, 50 Hz
(Y2): 300 V_{AC}, 50 Hz
1000 V_{DC}

TEST VOLTAGE

Component test (100 %):
2600 V_{AC}, 50 Hz, 2 s
(2600 V_{AC} for LS 7.5 mm and above)
(2200 V_{AC} for LS 5.0 mm)
Random sampling test (destructive test):
2600 V_{AC}, 50 Hz, 60 s
Voltage proof of coating (destructive test):
2600 V_{AC}, 50 Hz, 60 s

INSULATION RESISTANCE

≥ 10 000 MΩ

CAPACITANCE TOLERANCE

± 20 % (code M); ± 10 % (code K)

DISSIPATION FACTOR

Class 1: max. 0.5 % (1 MHz)
Class 2: max. 2.5 % (1 kHz)

For technical questions, contact: cdc@vishay.com
THIS DOCUMENT IS SUBJECT TO CHANGE WITHOUT NOTICE. THE PRODUCTS DESCRIBED HEREIN AND THIS DOCUMENT ARE SUBJECT TO SPECIFIC DISCLAIMERS, SET FORTH AT www.vishay.com/doc?91000

DIMENSIONS in millimeters

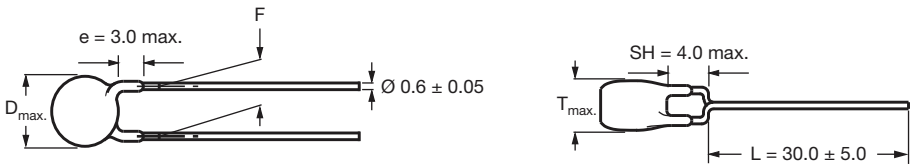

Capacitors with 5.0 mm, 7.5 mm, 10 mm, or 12.5 mm lead spacing.
Coating extension e valid for straight leads only.

TECHNICAL DATA

CAPACITANCE C (pF)	CAPACITANCE TOLERANCE (%)	BODY DIAMETER $D_{max.}$ (mm)	BODY THICKNESS $T_{max.}$ (mm)	LEAD SPACING [1] F (mm) ± 1 mm	PART NUMBER MISSING DIGITS SEE ORDERING CODE BELOW
U2J (N750)					
10	± 10	7.5	5.0	5.0, 7.5, 10.0, or 12.5	VY2100K29U2JS6###
15					VY2150K29U2JS6###
22					VY2220K29U2JS6###
33					VY2330K29U2JS6###
47					VY2470K29U2JS6###
Y5S (2C3)					
68	± 10	7.5	5.0	5.0, 7.5, 10.0, or 12.5	VY2680K29Y5SS6###
100					VY2101K29Y5SS6###
150					VY2151K29Y5SS6###
220					VY2221K29Y5SS6###
330					VY2331K29Y5SS6###
470					VY2471K29Y5SS6###
Y5U (2E3)					
680	± 20	7.5	5.0	5.0, 7.5, 10.0, or 12.5	VY2681M29Y5US6###
1000					VY2102M29Y5US6###
1500		8.0			VY2152M31Y5US6###
2200		9.0			VY2222M35Y5US6###
3300		10.5			VY2332M41Y5US6###
3900		11.0			VY2392M43Y5US6###
4700		12.5		7.5, 10.0, or 12.5	VY2472M49Y5US6###
6800		14.5			VY2682M59Y5US63##
10 000		16.0			VY2103M63Y5US63##
Y5V (2F3) MINI SIZE SERIES					
1000	± 20	7.5	5.0	5.0, 7.5, 10.0, or 12.5	VY2102M29Y5VS6###
1500		7.5			VY2152M29Y5VS6###
2200		8.0			VY2222M31Y5VS6###
3300		9.0			VY2332M35Y5VS6###
3900		10.0			VY2392M39Y5VS6###
4700		10.5			VY2472M41Y5VS6###
6800		12.0			VY2682M47Y5VS6###
10 000		15.0			VY2103M59Y5VS6###

Note

[1] Straight leads are available on request

For technical questions, contact: cdc@vishay.com
THIS DOCUMENT IS SUBJECT TO CHANGE WITHOUT NOTICE. THE PRODUCTS DESCRIBED HEREIN AND THIS DOCUMENT ARE SUBJECT TO SPECIFIC DISCLAIMERS, SET FORTH AT www.vishay.com/doc?91000

ORDERING CODE										
###	15th to 17th digit		Lead configuration			Available configurations see below				
Example	**VY2**	**221**	**K**	**29**	**Y5S**	**S**	**6**	**U**	**V**	**7**
	Series	Capacitance value	Tolerance code	Size code	Temperature coefficient	Rated voltage	Lead wire diameter	Packaging / lead length	Lead style	Lead spacing
						S = X1/Y2 300 V (AC)		3 = bulk T = tape and reel U = ammopack	L = straight V = inline kinked	5 = 5.0 7 = 7.5 0 = 10.0 X = 12.5

LEADSPACING 5.0 mm AND 7.5 mm

PACKAGING				
SIZE CODE	**BODY DIAMETER $D_{max.}$ (mm)**	**PACKAGING QUANTITIES**		
		BULK	**REEL**	**AMMO**
29 to 49	12.5	1000	1000	1000
59 to 63	16.0	500	-	-

LEADSPACING 10.0 mm AND 12.5 mm

PACKAGING					
CAPACITANCE VALUE	**SIZE CODE**	**BODY DIAMETER $D_{max.}$ (mm)**	**PACKAGING QUANTITIES**		
			BULK	**REEL**	**AMMO**
10 pF to 4700 pF	29 to 49	12.5	1000	500	750
6800 pF to 0.01 µF	59 to 63	16.0	500	500	750

Note

- The capacitors are supplied in bulk packaging (cardboard boxes), in tape on reel in ammopack

STRAIGHT LEADS

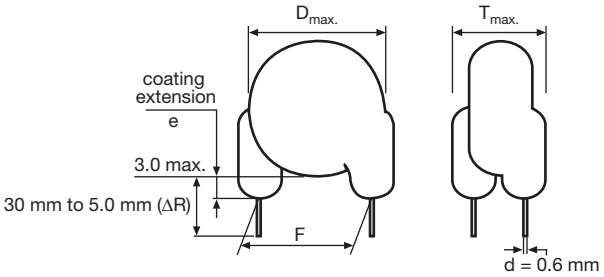

For technical questions, contact: cdc@vishay.com
THIS DOCUMENT IS SUBJECT TO CHANGE WITHOUT NOTICE. THE PRODUCTS DESCRIBED HEREIN AND THIS DOCUMENT ARE SUBJECT TO SPECIFIC DISCLAIMERS, SET FORTH AT www.vishay.com/doc?91000

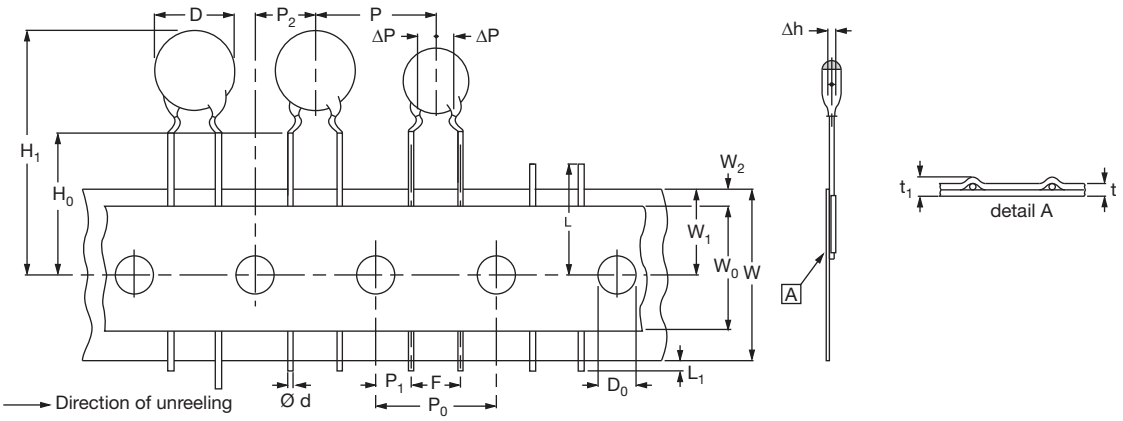

Fig. 1 - Kinked capacitors on tape, lead spacing 5.0 mm (0.2") and 7.5 mm (0.3")

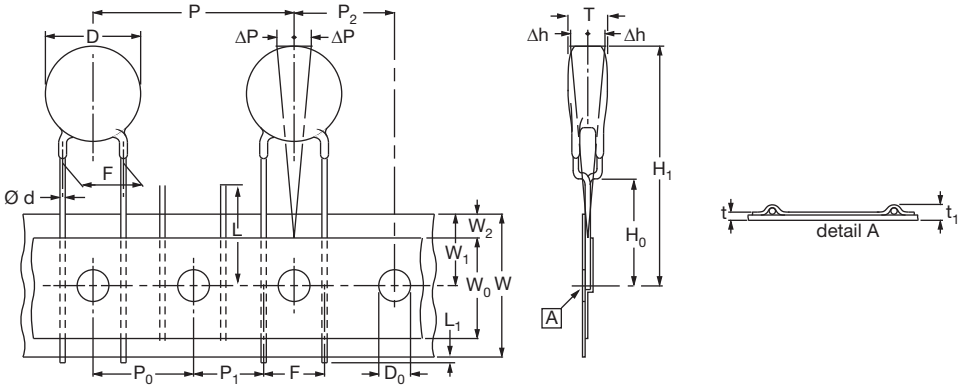

Fig. 2 - Inline kink (V) leaded capacitors on tape, lead spacing 10 mm (0.40")

DIMENSION OF TAPE				
SYMBOL	PARAMETER	DIMENSIONS (mm)		
		FIG. 1 (5 mm)	FIG. 1 (7.5 mm)	FIG. 2 (10 mm)
D (1)	Body diameter	11.0 max.	14.0 max.	16.0 max.
d	Lead diameter	0.6 ± 0.05	0.6 ± 0.05	0.6 ± 0.05
P	Pitch of component	12.7 ± 1	15.0 ± 1	25.4 ± 1
P_0 (2)	Pitch of sprocket hole	12.7 ± 0.3	15.0 ± 0.3	12.7 ± 0.3
P_1 (3)	Distance, hole center to lead	3.85 ± 0.7	3.75 ± 0.7	7.7 ± 1.0
P_2 (3)	Distance, hole to center of component	6.35 ± 1.3	7.5 ± 1.5	12.7 ± 1.5
F	Lead spacing	5.0 (+ 0.6 / - 0.4)	7.5 (+ 0.6 / - 0.4)	10.0 (+ 0.6 / - 0.4)
Δh	Average deviation across tape	± 1.0 max.	± 1.0 max.	± 1.0 max.
ΔP	Average deviation in direction of reeling	± 1.0 max.	± 1.0 max.	± 1.0 max.
W	Carrier tape width	18.0 + 1 / - 0.5	18.0 + 1/- 0.5	18.0 + 1 / - 0.5
W_0	Hold-down tape width	5.0 min.	5.0 min.	5.0 min.
W_1	Position of sprocket hole	9.0 + 0.75 / - 0.5	9.0 + 0.75 / - 0.5	9.0 + 0.75 / - 0.5
W_2	Distance of hold-down tape	3.0 max.	3.0 max.	3.0 max.
H_1	Maximum component height	32	40	40
H_0	Height to seating plane (for kinked leads)	16.0 ± 0.5	16.0 ± 0.5	16.0 ± 0.5
H_0	Height to seating plane (for straight leads)	20.0 ± 0.5	20.0 ± 0.5	20.0 ± 0.5
L	Length of cut leads	11.0 max.	11.0 max.	11.0 max.
L_1	Length of lead protrusion	1.0 max.	1.0 max.	1.0 max.
D_0	Diameter of sprocket hole	4.0 ± 0.2	4.0 ± 0.2	4.0 ± 0.2
t	Total tape thickness	0.9 max.	0.9 max.	0.9 max.
t_1	Maximum thickness of tape and wires	1.5 max.	1.5 max.	1.5 max.

Notes
(1) See “Technical Data” table
(2) Cumulative pitch error: ± ≤ 1 mm/20 pitches
(3) Obliquity maximum 3°

For technical questions, contact: cdc@vishay.com
THIS DOCUMENT IS SUBJECT TO CHANGE WITHOUT NOTICE. THE PRODUCTS DESCRIBED HEREIN AND THIS DOCUMENT ARE SUBJECT TO SPECIFIC DISCLAIMERS, SET FORTH AT www.vishay.com/doc?91000

REEL AND TAPE DATA in millimeters

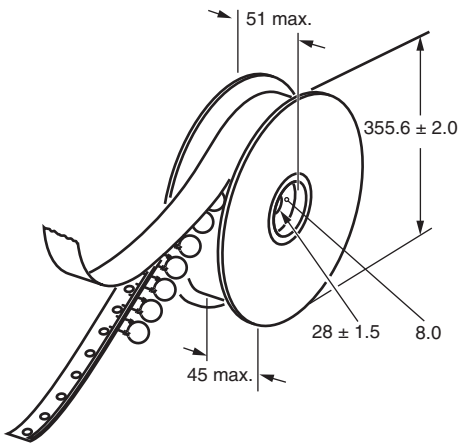

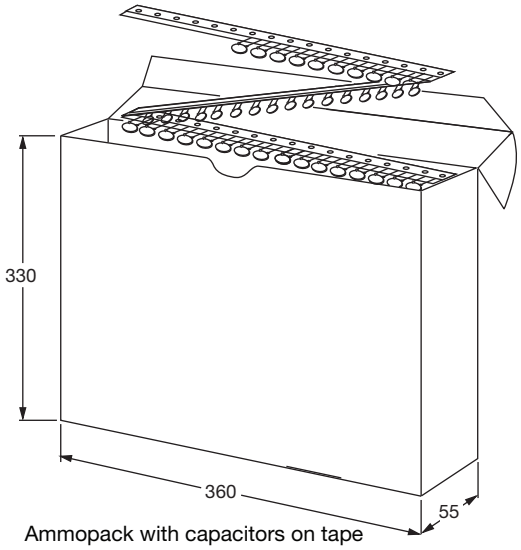

Ammopack with capacitors on tape

APPROVALS				
IEC 60384-14.4 - Safety tests This approval together with CB test certificate substitutes all national approvals.				
CB Certificate				
Y2-capacitor: CB test certificate:	US-26163-UL	10 pF to 10 nF	300 V_{AC}	
X1-capacitor: CB test certificate:	US-26163-UL	10 pF to 10 nF	440 V_{AC}	
VDE				
Y2-capacitor: VDE marks approval:	40009669	10 pF to 10 nF	300 V_{AC}	
X1-capacitor: VDE marks approval:	40009669	10 pF to 10 nF	440 V_{AC}	
DIN EN 60384-14 VDE 0565-1-1:2006-04 - Safety tests				
Underwriters Laboratories Inc. / Canadian Standards Association				
Y2-capacitor: UL-test certificate:	E183844	10 pF to 10 nF	300 V_{AC}	
X1-capacitor: UL-test certificate:	E183844	10 pF to 10 nF	440 V_{AC}	
UL 60384-14.1, CSA E60384-1:03 2nd edition, CSA E60384-14:09 2nd edition				
Across-the-line, antenna-coupling, and line-by-pass component				
CQC				
Y2-capacitor: CQC test certificate:	CQC05001012316	10 pF to 10 nF	300 V_{AC}	
X1-capacitor: CQC test certificate:	CQC05001012316	10 pF to 10 nF	440 V_{AC}	

For technical questions, contact: cdc@vishay.com
THIS DOCUMENT IS SUBJECT TO CHANGE WITHOUT NOTICE. THE PRODUCTS DESCRIBED HEREIN AND THIS DOCUMENT ARE SUBJECT TO SPECIFIC DISCLAIMERS, SET FORTH AT www.vishay.com/doc?91000

MARKING

Sample
(2 sides)

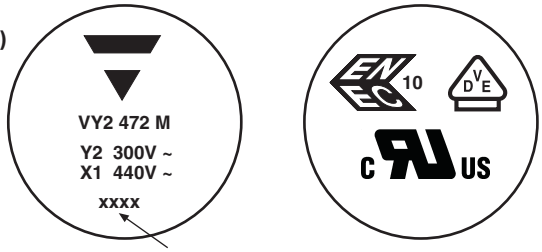

4 digit date code
(year/week; add suffix "V" for mini size series)

Front Back

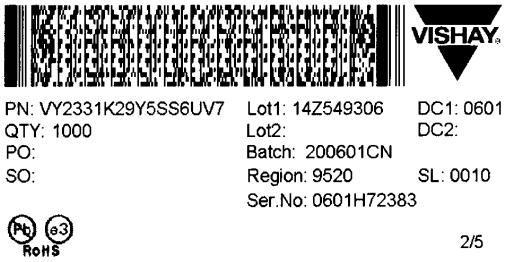

PERFORMANCE

TEST	TEST CONDITION	TEST LIMITS
Visual and mechanical inspection	Optical inspection, dimensions measured with caliper	No visible damage, marking legible
Capacitance (C)	25 °C ± 3 °C, relative humidity (RH) ≤ 75 %, 1.0 V_{RMS} ± 0.2 V_{RMS} at 1 kHz for Y5U and Y5S, and 1 MHz for U2J	Capacitance within specified tolerance
Dissipation factor (DF)		DF ≤ 0.3 % for U2J and DF ≤ 2.5 % for Y5S and Y5U
Insulation resistance (IR)	Measured within 60 s ± 5 s after charging at 500 V_{DC}	10 000 MΩ min.
Dielectric strength	2600 V_{AC} at 50 Hz / 60 Hz for 1 min, 50 mA max.	No failure
Temperature characteristic	RH ≤ 75 %, 1.0 V_{RMS} ± 0.2 V_{RMS} at 1 kHz for Y5U and Y5S, and 1 MHz for U2J	U2J: -750 ppm ± 120 ppm Y5S: ± 22 % Y5U: +22 % / -56 %
Impulse voltage	3 pulses of 5 kV	No failure
Life test	1000 h at 125 °C ± 2 °C, 550 V_{AC}/50 Hz; once every hour 1000 V_{AC} for 0.1 s	External appearance: no visible damage ΔC/C ≤ ± 15 % DF ≤ 0.5 % for U2J and ≤ 5 % for Y5S and Y5U IR ≥ 3000 MΩ Dielectric strength: no failure
Humidity test	500 h at 440 V_{AC}, 50 Hz and 500 h unloaded 40 °C, RH = 90 % to 95 %	External appearance: no visible damage ΔC/C ≤ ± 10 % for U2J and ≤ ± 15 % for Y5S and Y5U DF ≤ 0.5 % for U2J and ≤ 5 % for Y5S and Y5U IR ≥ 3000 MΩ Dielectric strength: no failure
Robustness of termination	Pull test: 0.5 kg tensile weight in radial direction for 10 s ± 1 s Bending strength: capacitor body rotated by 90° in both directions	No damage to capacitor body and lead wire
Soldering effect	Immersion of lead wires into 260 °C ± 5 °C solder for 10 s ± 2 s; min. distance from body: 1.5 mm Hand soldering at 400 °C ± 10 °C for 3 s to 4 s; min. distance from body: 1.5 mm	External appearance: no visible damage ΔC/C ≤ ± 5 % for U2J and ≤ ± 10 % for Y5S and Y5U Dielectric strength: no failure
Vibration test	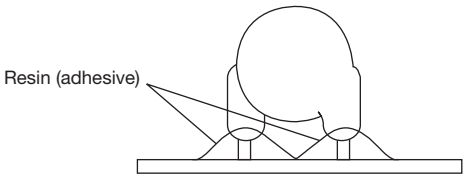 Solder the capacitor onto test jig (glass epoxy body) and use resin (adhesive) to stick the body to the test jig. The capacitor must be soldered firmly to the supporting lead wire. Vibration change from 10 Hz to 2000 Hz and back to 10 Hz; Total amplitude: 1.5 mm; Acceleration: 100 m/s^2; Sweep rate: 1 oct/min, each axis 2 h (6 h in total)	External appearance: no visible damage Capacitance within specified tolerance DF ≤ 0.3 % for U2J and ≤ 2.5 % for Y5S and Y5U IR ≥ 10 000 GΩ

For technical questions, contact: cdc@vishay.com
THIS DOCUMENT IS SUBJECT TO CHANGE WITHOUT NOTICE. THE PRODUCTS DESCRIBED HEREIN AND THIS DOCUMENT ARE SUBJECT TO SPECIFIC DISCLAIMERS, SET FORTH AT www.vishay.com/doc?91000

LEAKAGE CURRENT VS. VOLTAGE (Typical)

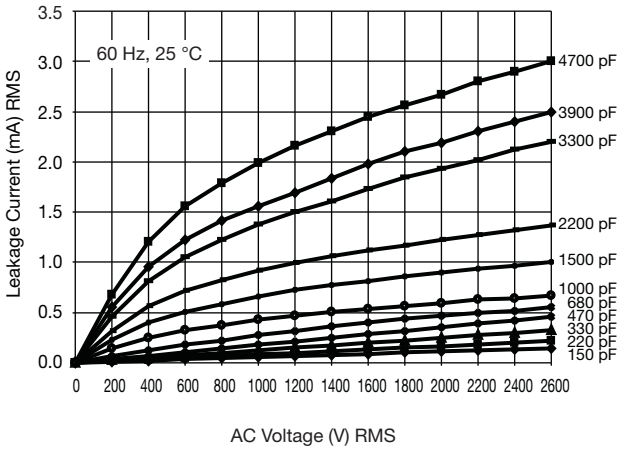

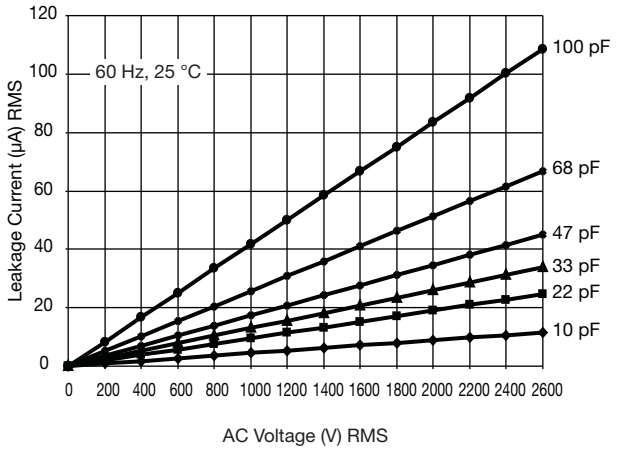

Note

- The capacitors meet the essential requirements of EIA 198. Unless stated otherwise all electrical values apply at an ambient temperature of 25 °C ± 3 °C, at normal atmospheric conditions

RELATED DOCUMENTS	
General Information	www.vishay.com/doc?28536
CB Test Certificate	www.vishay.com/doc?22254
VDE Marks Approval	www.vishay.com/doc?22256
UL Test Certificate	www.vishay.com/doc?22253
CQC Test Certificate	www.vishay.com/doc?22255
LTspice® Models	www.vishay.com/doc?28568

SAMPLE KITS	
Part Number (VY2 Sample Kit)	VY21-KIT-HF
Link (VY2 Sample Kit)	www.vishay.com/doc?28554
Part Number (VY2...Y5V Sample Kit)	VY2-KIT-MS
Link (VY2...Y5V Sample Kit)	www.vishay.com/doc?28562

THIS DOCUMENT IS SUBJECT TO CHANGE WITHOUT NOTICE. THE PRODUCTS DESCRIBED HEREIN AND THIS DOCUMENT ARE SUBJECT TO SPECIFIC DISCLAIMERS, SET FORTH AT www.vishay.com/doc?91000

Disclaimer

ALL PRODUCT, PRODUCT SPECIFICATIONS AND DATA ARE SUBJECT TO CHANGE WITHOUT NOTICE TO IMPROVE RELIABILITY, FUNCTION OR DESIGN OR OTHERWISE.

Vishay Intertechnology, Inc., its affiliates, agents, and employees, and all persons acting on its or their behalf (collectively, "Vishay"), disclaim any and all liability for any errors, inaccuracies or incompleteness contained in any datasheet or in any other disclosure relating to any product.

Vishay makes no warranty, representation or guarantee regarding the suitability of the products for any particular purpose or the continuing production of any product. To the maximum extent permitted by applicable law, Vishay disclaims (i) any and all liability arising out of the application or use of any product, (ii) any and all liability, including without limitation special, consequential or incidental damages, and (iii) any and all implied warranties, including warranties of fitness for particular purpose, non-infringement and merchantability.

Statements regarding the suitability of products for certain types of applications are based on Vishay's knowledge of typical requirements that are often placed on Vishay products in generic applications. Such statements are not binding statements about the suitability of products for a particular application. It is the customer's responsibility to validate that a particular product with the properties described in the product specification is suitable for use in a particular application. Parameters provided in datasheets and / or specifications may vary in different applications and performance may vary over time. All operating parameters, including typical parameters, must be validated for each customer application by the customer's technical experts. Product specifications do not expand or otherwise modify Vishay's terms and conditions of purchase, including but not limited to the warranty expressed therein.

Except as expressly indicated in writing, Vishay products are not designed for use in medical, life-saving, or life-sustaining applications or for any other application in which the failure of the Vishay product could result in personal injury or death. Customers using or selling Vishay products not expressly indicated for use in such applications do so at their own risk. Please contact authorized Vishay personnel to obtain written terms and conditions regarding products designed for such applications.

No license, express or implied, by estoppel or otherwise, to any intellectual property rights is granted by this document or by any conduct of Vishay. Product names and markings noted herein may be trademarks of their respective owners.

© 2019 VISHAY INTERTECHNOLOGY, INC. ALL RIGHTS RESERVED

OCEAN CHIPS
Океан Электроники
Поставка электронных компонентов

Компания «Океан Электроники» предлагает заключение долгосрочных отношений при поставках импортных электронных компонентов на взаимовыгодных условиях!

Наши преимущества:

- Поставка оригинальных импортных электронных компонентов напрямую с производств Америки, Европы и Азии, а так же с крупнейших складов мира;
- Широкая линейка поставок активных и пассивных импортных электронных компонентов (более 30 млн. наименований);
- Поставка сложных, дефицитных, либо снятых с производства позиций;
- Оперативные сроки поставки под заказ (от 5 рабочих дней);
- Экспресс доставка в любую точку России;
- Помощь Конструкторского Отдела и консультации квалифицированных инженеров;
- Техническая поддержка проекта, помощь в подборе аналогов, поставка прототипов;
- Поставка электронных компонентов под контролем ВП;
- Система менеджмента качества сертифицирована по Международному стандарту ISO 9001;
- При необходимости вся продукция военного и аэрокосмического назначения проходит испытания и сертификацию в лаборатории (по согласованию с заказчиком);
- Поставка специализированных компонентов военного и аэрокосмического уровня качества (Xilinx, Altera, Analog Devices, Intersil, Interpoint, Microsemi, Actel, Aeroflex, Peregrine, VPT, Syfer, Eurofarad, Texas Instruments, MS Kennedy, Miteq, Cobham, E2V, MA-COM, Hittite, Mini-Circuits, General Dynamics и др.);

Компания «Океан Электроники» является официальным дистрибьютором и эксклюзивным представителем в России одного из крупнейших производителей разъемов военного и аэрокосмического назначения **«JONHON»**, а так же официальным дистрибьютором и эксклюзивным представителем в России производителя высокотехнологичных и надежных решений для передачи СВЧ сигналов **«FORSTAR»**.

AVIC JONHON

«JONHON» (основан в 1970 г.)

Разъемы специального, военного и аэрокосмического назначения:

(Применяются в военной, авиационной, аэрокосмической, морской, железнодорожной, горно- и нефтедобывающей отраслях промышленности)

«FORSTAR» (основан в 1998 г.)

ВЧ соединители, коаксиальные кабели, кабельные сборки и микроволновые компоненты:

(Применяются в телекоммуникациях гражданского и специального назначения, в средствах связи, РЛС, а так же военной, авиационной и аэрокосмической отраслях промышленности).

FORSTAR®

Телефон: 8 (812) 309-75-97 (многоканальный)
Факс: 8 (812) 320-03-32
Электронная почта: ocean@oceanchips.ru
Web: http://oceanchips.ru/
Адрес: 198099, г. Санкт-Петербург, ул. Калинина, д. 2, корп. 4, лит. А