ECLIPTEK® CORPORATION

Marketing Bulletin

DATE: January 5, 2004

TO: Affected Customers

FROM: Mark Stoner

RE: Product Termination

To all concerned parties,

This bulletin is to notify all customers of the termination of the following Ecliptek series effective November 11th, 2003:

Series	Description	Recommended Replacement
EC51	5V 14 Pin DIP TCXO, HCMOS	EB51F3
ES51	5V 14 Pin DIP TCXO, Sinewave	ES51F3
EC53	3.3V 14 Pin DIP TCXO, HCMOS	EB52F3

In compliance with our End of Life (EOL) policy, this will serve as advanced notice of product termination. New orders will not be accepted after February 1st, 2004, with deliveries to conclude by July 1st 2004.

If there are any questions pertaining to this bulletin, please fell free to contact me. Thank you for your cooperation.

Best Regards,

Mark W. Stoner
Director of Marketing
Ecliptek Corporation

3545 CADILLAC AVENUE · COSTA MESA, CA 92626-1401 · (714) 433-1200 · Fax (714) 433-1234

STANDARD SPECIFICATIONS

Frequency Range:	9.600MHz to 35.000MHz
Frequency Stability:	See Table 1 for Maximum Values (Inclusive of Operating Temperature Range)
vs. Input Voltage (±5%)	±0.3ppm Maximum
vs. Load (±2kΩ//±2pF)	±0.3ppm Maximum
vs. Aging (at 25°C)	±1ppm/year Maximum
Operating/Storage Temp. Range	See Table 1 for Operating Temperature Range / Storage -40ºC to +85ºC
Supply Voltage	5.0Vdc ±5%
Input Current	1.5mA Max. ≤ 20.000MHz, 2.0mA Max. 20.001MHz to 29.999MHz, 3.0mA Max. ≥ 30.000MHz
Output Voltage	1.0Vp-p Minimum
Load Drive Capabillity	10kOhms // 10pF
Internal Trim (Top of Can)	±3ppm Minimum
Pin 1 Control Voltage	
Blank	No Connect (Pin 1 not present)
V	2.5Vdc ±2.0Vdc, Positive Transfer Charateristic
Frequency Deviation	±5ppm Minimum over Control Voltage
Typical Phase Noise	-85dBc/Hz at 10Hz Offset, -115dBc/Hz at 100Hz Offset, -135dBc/Hz at 1kHz Offset, -140dBc/Hz at 10kHz Offset, -145dBc/Hz at 100kHz Offset, -150dBc/Hz at 1MHz Offset

OBSOLETE

ENVIRONMENTAL & MECHANICAL

Fine Leak Test:	MIL-STD-883, Method 1014, Condition A	Solderability:	MIL-STD-883, Method 2002
Gross Leak Test:	MIL-STD-883, Method 1014, Condition C	Temperature Cycling:	MIL-STD-883, Method 1010
Mechanical Shock:	MIL-STD-202, Method 213, Condition C	Resistance to Soldering Heat:	MIL-STD-202, Method 210
Vibration:	MIL-STD-883, Method 2007, Condition A	Resistance to Solvents:	MIL-STD-202, Method 215
Lead Integrity:	MIL-STD-883, Method 2004		

TABLE 1: PART NUMBERING CODES

OPERATING TEMPERATURE		FREQUENCY STABILITY X Denotes availability from 9.600MHz to 25.000MHz Y Denotes availability for any valid frequency.						
Range	Code	15	20	25	30	35	50	Code
		±1.5ppm	±2.0ppm	±2.5ppm	±3.0ppm	±3.5ppm	±5.0ppm	Range
0°C to +50°C	A	Y	Y	Y	Y	Y	Y	
-10°C to +60°C	B	Y	Y	Y	Y	Y	Y	
-20°C to +70°C	C	X	Y	Y	Y	Y	Y	
-30°C to +60°C	D		X	Y	Y	Y	Y	
-30°C to +75°C	E		X	X	Y	Y	Y	
-35°C to +80°C	F			X	X	Y	Y	
-40°C to +85°C	G				X	X	Y	

MARKING GUIDE

(Line #1) **ECLIPTEK**

(Line #2) **ES51 00 X Y**

- **Pin 1 Connection**
  Blank = No Connect (pin 1 not present)
  V = Control Voltage 2.5Vdc ±2.0Vdc
  Positive Transfer Characteristic
- **Operating Temperature Code Per Table 1**
- **Frequency Stability Code Per Table 1**

(Line #3) **XX.XXXM**

- **Frequency**

(Line #4) **XX Y ZZ**

- **Week of Year**
- **Last Digit of Year**
- **Ecliptek Manufacturing Code**

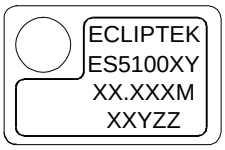

NOTE: Marking shall conform to conditions listed in TQC41-001-000.

PART NUMBERING GUIDE

ES51 25 E V - 12.800M

- **Frequency**
- **Pin 1 Connection**
  Blank = No Connect (pin 1 not present)
  V = Voltage Control
- **Operating Temperature Range Code Per Table 1**
- **Frequency Stability Code Per Table 1**

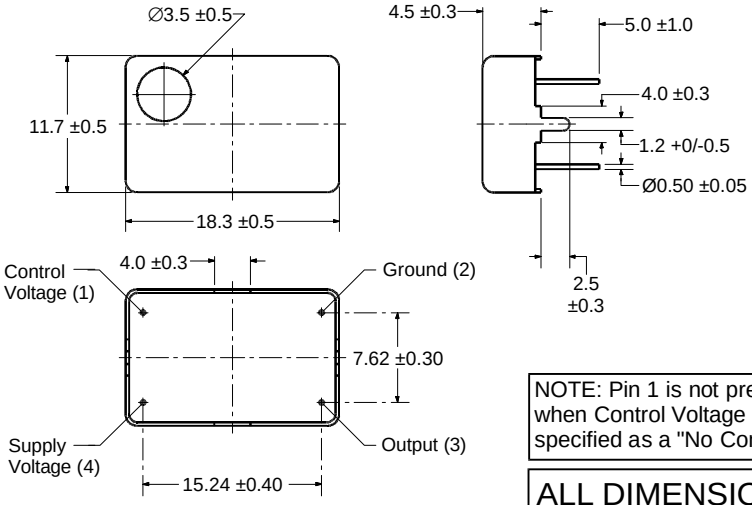

NOTE: Pin 1 is not present when Control Voltage is specified as a "No Connect"

ALL DIMENSIONS IN MILLIMETERS

SPECIFICATION CONTROL DRAWING

ECLIPTEK® CORPORATION	**Drawing Number** CSC06-020-000
Title 4.5mm HEIGHT THRU-HOLE SINEWAVE TCXO	
Revision E	**Effectivity Date** 05-02-03
ECN Number 8396	PAGE 1 OF 2
Approved By **Date**	**Released By** **Date**

STANDARD SPECIFICATIONS

Frequency Range:	9.600MHz to 35.000MHz
Frequency Stability: vs. Input Voltage (±5%) vs. Load (±2pF) vs. Aging (at 25°C)	See Table 1 for Maximum Values (Inclusive of Operating Temperature Range) ±0.3ppm Maximum ±0.3ppm Maximum ±1ppm/year Maximum
Operating/Storage Temp. Range	See Table 1 for Operating Temperature Range / Storage -40ºC to +85ºC
Supply Voltage	5.0Vdc ±5%
Input Current	30mA Maximum
Output Voltage Logic High	2.4Vdc Min. w/TTL Load, VDD-0.5Vdc Min. w/HCMOS Load
Output Voltage Logic Low	0.4Vdc Max. w/TTL Load, 0.5Vdc Max. w/HCMOS Load
Rise/Fall Time	10nSec (0.4Vdc to 2.4Vdc w/TTL Load, 20% to 80% of waveform w/HCMOS Load)
Duty Cycle	50% ±10% (@1.4Vdc w/TTL Load, @50% of waveform w/HCMOS Load)
Load Drive Capabillity	10TTL Load or 15pF HCMOS Load Maximum
Internal Trim (Top of Can)	±3ppm Minimum
Pin 1 Control Voltage Blank V	 No Connect (Pin 1 not present) 2.5Vdc ±2.0Vdc, Positive Transfer Charateristic
Frequency Deviation	±5ppm Minimum over Control Voltage
Typical Phase Noise	-85dBc/Hz at 10Hz Offset, -115dBc/Hz at 100Hz Offset, -135dBc/Hz at 1kHz Offset, -140dBc/Hz at 10kHz Offset, -145dBc/Hz at 100kHz Offset, -150dBc/Hz at 1MHz Offset

OBSOLETE

ENVIRONMENTAL & MECHANICAL

Fine Leak Test:	MIL-STD-883, Method 1014, Condition A	Solderability:	MIL-STD-883, Method 2002
Gross Leak Test:	MIL-STD-883, Method 1014, Condition C	Temperature Cycling:	MIL-STD-883, Method 1010
Mechanical Shock:	MIL-STD-202, Method 213, Condition C	Resistance to Soldering Heat:	MIL-STD-202, Method 210
Vibration:	MIL-STD-883, Method 2007, Condition A	Resistance to Solvents:	MIL-STD-202, Method 215
Lead Integrity:	MIL-STD-883, Method 2004		

TABLE 1: PART NUMBERING CODES

OPERATING TEMPERATURE		FREQUENCY STABILITY X Denotes availability from 9.600MHz to 25.000MHz Y Denotes availability for any valid frequency.						
Range	Code	15	20	25	30	35	50	Code
		±1.5ppm	±2.0ppm	±2.5ppm	±3.0ppm	±3.5ppm	±5.0ppm	Range
0°C to +50°C	A	Y	Y	Y	Y	Y	Y	
-10°C to +60°C	B	Y	Y	Y	Y	Y	Y	
-20°C to +70°C	C	X	Y	Y	Y	Y	Y	
-30°C to +60°C	D		X	Y	Y	Y	Y	
-30°C to +75°C	E		X	X	Y	Y	Y	
-35°C to +80°C	F			X	X	Y	Y	
-40°C to +85°C	G				X	X	Y	

MARKING GUIDE

(Line #1) **ECLIPTEK**

(Line #2) **EC51 00 X Y**

- **Pin 1 Connection**
  Blank = No Connect (pin 1 not present)
  V = Control Voltage 2.5Vdc ±2.0Vdc
  Positive Transfer Characteristic
- **Operating Temperature Code Per Table 1**
- **Frequency Stability Code Per Table 1**

(Line #3) **XX.XXXM**

- **Frequency**

(Line #4) **XX Y ZZ**

- **Week of Year**
- **Last Digit of Year**
- **Ecliptek Manufacturing Code**

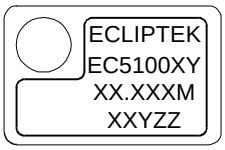

PART NUMBERING GUIDE

EC51 25 E V - 12.800M

- **Frequency**
- **Pin 1 Connection**
  Blank = No Connect (pin 1 not present)
  V = Voltage Control
- **Operating Temperature Range Code Per Table 1**
- **Frequency Stability Code Per Table 1**

NOTE: Marking shall conform to conditions listed in TQC41-001-000.

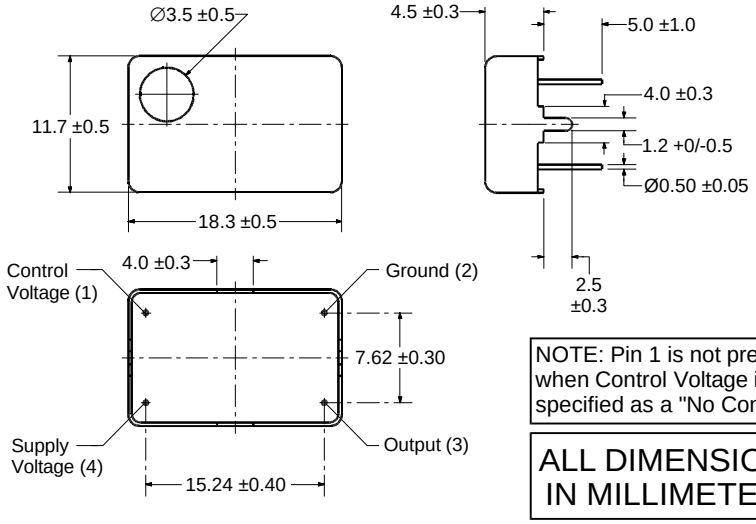

NOTE: Pin 1 is not present when Control Voltage is specified as a "No Connect"

ALL DIMENSIONS IN MILLIMETERS

SPECIFICATION CONTROL DRAWING

ECLIPTEK® CORPORATION	**Drawing Number** CSC06-010-000
Title 4.5mm HEIGHT THRU-HOLE HCMOS/TTL TCXO	
Revision E	**Effectivity Date** 05-02-03
ECN Number 8395	PAGE 1 OF 2
Approved By **Date**	**Released By** **Date**

STANDARD SPECIFICATIONS

Frequency Range:	9.600MHz to 35.000MHz
Frequency Stability: vs. Input Voltage (±5%) vs. Load (±2pF) vs. Aging (at 25°C)	See Table 1 for Maximum Values (Inclusive of Operating Temperature Range) ±0.3ppm Maximum ±0.3ppm Maximum ±1ppm/year Maximum
Operating/Storage Temp. Range	See Table 1 for Operating Temperature Range / Storage -40ºC to +85ºC
Supply Voltage	3.3Vdc ±5%
Input Current	10mA Maximum ≤ 20.000MHz, 20mA Maximum > 20.000MHz
Output Voltage Logic High	2.7Vdc Minimum
Output Voltage Logic Low	0.5Vdc Maximum
Rise/Fall Time	10nSec. Maximum (20% to 80% of waveform)
Duty Cycle	50% ±10% (@50% of waveform)
Load Drive Capabillity	15pF HCMOS Load Maximum
Internal Trim (Top of Can)	±3ppm Minimum
Pin 1 Control Voltage Blank V	 No Connect (Pin 1 not present) 1.65Vdc ±1.35Vdc, Positive Transfer Charateristic
Frequency Deviation	±5ppm Minimum over Control Voltage
Typical Phase Noise	-85dBc/Hz at 10Hz Offset, -115dBc/Hz at 100Hz Offset, -135dBc/Hz at 1kHz Offset, -140dBc/Hz at 10kHz Offset, -145dBc/Hz at 100kHz Offset, -150dBc/Hz at 1MHz Offset

OBSOLETE

ENVIRONMENTAL & MECHANICAL

Fine Leak Test:	MIL-STD-883, Method 1014, Condition A	Solderability:	MIL-STD-883, Method 2002
Gross Leak Test:	MIL-STD-883, Method 1014, Condition C	Temperature Cycling:	MIL-STD-883, Method 1010
Mechanical Shock:	MIL-STD-202, Method 213, Condition C	Resistance to Soldering Heat:	MIL-STD-202, Method 210
Vibration:	MIL-STD-883, Method 2007, Condition A	Resistance to Solvents:	MIL-STD-202, Method 215
Lead Integrity:	MIL-STD-883, Method 2004		

TABLE 1: PART NUMBERING CODES

OPERATING TEMPERATURE		FREQUENCY STABILITY X Denotes availability from 9.600MHz to 25.000MHz Y Denotes availability for any valid frequency.						
Range	Code	15	20	25	30	35	50	Code
		±1.5ppm	±2.0ppm	±2.5ppm	±3.0ppm	±3.5ppm	±5.0ppm	Range
0°C to +50°C	A	Y	Y	Y	Y	Y	Y	
-10°C to +60°C	B	Y	Y	Y	Y	Y	Y	
-20°C to +70°C	C	X	Y	Y	Y	Y	Y	
-30°C to +60°C	D		X	Y	Y	Y	Y	
-30°C to +75°C	E		X	X	Y	Y	Y	
-35°C to +80°C	F			X	X	Y	Y	
-40°C to +85°C	G				X	X	Y	

MARKING GUIDE

(Line #1) **ECLIPTEK**

(Line #2) **EC53 00 X Y**

- **Pin 1 Connection**
  Blank = No Connect (pin 1 not present)
  V = Control Voltage 1.65Vdc ±1.35Vdc
  Positive Transfer Characteristic
- **Operating Temperature Code Per Table 1**
- **Frequency Stability Code Per Table 1**

(Line #3) **XX.XXXM**

- **Frequency**

(Line #4) **XX Y ZZ**

- **Week of Year**
- **Last Digit of Year**
- **Ecliptek Manufacturing Code (Per TEN02-001-000)**

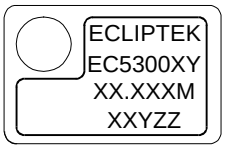

NOTE: Marking shall conform to conditions listed in TQC41-001-000.

PART NUMBERING GUIDE

EC53 25 E V - 12.800M

- **Frequency**
- **Pin 1 Connection**
  Blank = No Connect (pin 1 not present)
  V = Voltage Control
- **Operating Temperature Range Code Per Table 1**
- **Frequency Stability Code Per Table 1**

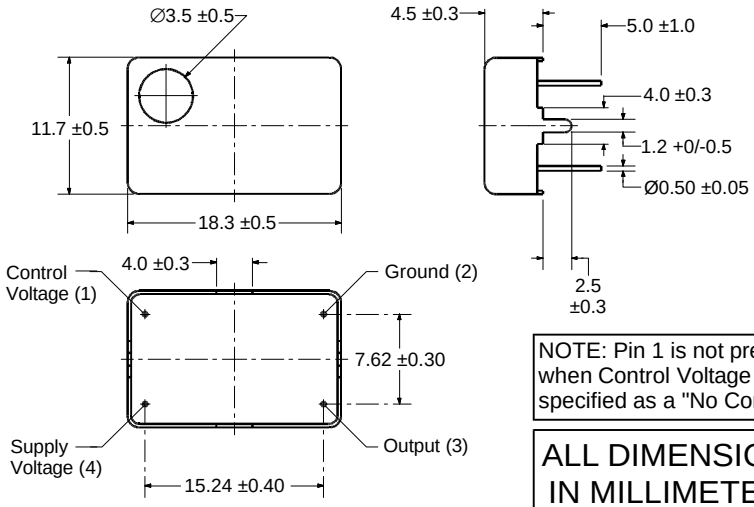

NOTE: Pin 1 is not present when Control Voltage is specified as a "No Connect"

ALL DIMENSIONS IN MILLIMETERS

CLASS/SUBCLASS: OS62

SPECIFICATION CONTROL DRAWING

ECLIPTEK® CORPORATION	**Drawing Number** CSC06-110-000
Title 4.5mm THRU-HOLE 3.3Vdc HCMOS/TTL TCXO	
Revision C	**Effectivity Date** 05-02-03
ECN Number 8400	PAGE 1 OF 2
Approved By **Date**	**Released By** **Date**

OCEAN CHIPS
Океан Электроники
Поставка электронных компонентов

Компания «Океан Электроники» предлагает заключение долгосрочных отношений при поставках импортных электронных компонентов на взаимовыгодных условиях!

Наши преимущества:

- Поставка оригинальных импортных электронных компонентов напрямую с производств Америки, Европы и Азии, а так же с крупнейших складов мира;
- Широкая линейка поставок активных и пассивных импортных электронных компонентов (более 30 млн. наименований);
- Поставка сложных, дефицитных, либо снятых с производства позиций;
- Оперативные сроки поставки под заказ (от 5 рабочих дней);
- Экспресс доставка в любую точку России;
- Помощь Конструкторского Отдела и консультации квалифицированных инженеров;
- Техническая поддержка проекта, помощь в подборе аналогов, поставка прототипов;
- Поставка электронных компонентов под контролем ВП;
- Система менеджмента качества сертифицирована по Международному стандарту ISO 9001;
- При необходимости вся продукция военного и аэрокосмического назначения проходит испытания и сертификацию в лаборатории (по согласованию с заказчиком);
- Поставка специализированных компонентов военного и аэрокосмического уровня качества (Xilinx, Altera, Analog Devices, Intersil, Interpoint, Microsemi, Actel, Aeroflex, Peregrine, VPT, Syfer, Eurofarad, Texas Instruments, MS Kennedy, Miteq, Cobham, E2V, MA-COM, Hittite, Mini-Circuits, General Dynamics и др.);

Компания «Океан Электроники» является официальным дистрибьютором и эксклюзивным представителем в России одного из крупнейших производителей разъемов военного и аэрокосмического назначения **«JONHON»**, а так же официальным дистрибьютором и эксклюзивным представителем в России производителя высокотехнологичных и надежных решений для передачи СВЧ сигналов **«FORSTAR»**.

AVIC JONHON

«JONHON» (основан в 1970 г.)

Разъемы специального, военного и аэрокосмического назначения:

(Применяются в военной, авиационной, аэрокосмической, морской, железнодорожной, горно- и нефтедобывающей отраслях промышленности)

«FORSTAR» (основан в 1998 г.)

ВЧ соединители, коаксиальные кабели, кабельные сборки и микроволновые компоненты:

(Применяются в телекоммуникациях гражданского и специального назначения, в средствах связи, РЛС, а так же военной, авиационной и аэрокосмической отраслях промышленности).

FORSTAR®

Телефон: 8 (812) 309-75-97 (многоканальный)
Факс: 8 (812) 320-03-32
Электронная почта: ocean@oceanchips.ru
Web: http://oceanchips.ru/
Адрес: 198099, г. Санкт-Петербург, ул. Калинина, д. 2, корп. 4, лит. А