click here to see hardware and mounting options

# Type 101C –55 °C to 105 °C Low-ESR, Wide-Temperature Grade

**The Ultimate in Cold Performance and ESR**

The Type 101C is the wide-temperature, low voltage version of the Type 550C. It is ideal for high-ripple current military and industrial applications that need full performance to –40 °C and solid performance to –55 °C. It also excels as a power-supply output capacitor because of its exceptionally low ESR. The extended cathode foil of the 101C assures heat flow from the capacitor element to the can in all mounting orientations.

## Highlights

- 5,000 hour load life
- Ripple Current to > 100 amps @ 55 °C
- ESRs to 2.5 mΩ
- > 90% capacitance at –40 °C
- Thermal-Pak™ extended cathode construction

## Specifications

| | |
|---|---|
| **Temperature Range** | –55 °C to +105 °C |
| **Rated Voltage Range** | 7.5 to 250 Vdc |
| **Capacitance Range** | 290 µF to 1.5 F |
| **Capacitance Tolerance** | 7.5 to 150 Vdc: –10% +75%, 200 & 250 Vdc: –10% +50% |
| **Leakage Current** | ≤1.5 $\sqrt{CV}$ µA, 4 mA max, 5 minutes |
| **Ripple Current Multipliers** | Ambient Temperature |

| 45 °C | 55 °C | 65 °C | 75 °C | 85 °C | 95 °C | 105 °C |
|---|---|---|---|---|---|---|
| 1.66 | 1.52 | 1.37 | 1.20 | 1.00 | 0.75 | 0.36 |

| Frequency | 50 Hz | 60 Hz | 120 Hz | 360 Hz | 1 kHz | 5 kHz | 10 kHz & up |
|---|---|---|---|---|---|---|---|
| **1 3/8" & 1 3/4" Diameters** | | | | | | | |
| **7.5 to 150 V** | 0.91 | 0.93 | 1.00 | 1.06 | 1.08 | 1.09 | 1.09 |
| **200 & 250 V** | 0.82 | 0.86 | 1.00 | 1.14 | 1.20 | 1.23 | 1.23 |
| **2" & 2 1/2" Diameters** | | | | | | | |
| **7.5 to 150 V** | 0.92 | 0.94 | 1.00 | 1.05 | 1.07 | 1.08 | 1.08 |
| **200 & 250 V** | 0.82 | 0.86 | 1.00 | 1.14 | 1.20 | 1.23 | 1.27 |
| **3" Diameters** | | | | | | | |
| **7.5 to 150 V** | 0.95 | 0.96 | 1.00 | 1.03 | 1.04 | 1.05 | 1.05 |
| **200 & 250 V** | 0.85 | 0.88 | 1.00 | 1.11 | 1.15 | 1.18 | 1.18 |

| | |
|---|---|
| **Low Temperature Characteristics** | Impedance ratio: $Z_{-55°C}/Z_{+25°C} \leq 3$ |
| **Endurance Life Test** | 5,000 h at 105 °C and full load<br>ΔCapacitance ±20%<br>ESR 200% of limit<br>DCL 100% of limit |
| **Shelf Life Test** | 500 h at 105 °C<br>Capacitance 100% of limit<br>ESR 100% of limit<br>DCL 100% of limit |
| **Vibration** | 10 to 55 Hz, 0.06" and 10 g max, 1.5 h each of two axis |
| **RoHS Compliant** | |

# Type 101C –55 °C to 105 °C Low-ESR, Wide-Temperature Grade

## Part Numbering System

| 101C | 183 | T | 250 | DG | 2 | D | S |
|---|---|---|---|---|---|---|---|
| **Type** | **Capacitance** | **Tolerance** | **Voltage** | **Case Code** | **Insulation** | **Terminal** | **Can Style** |
| | **100 = 10 µF**<br>**101 =** 100 µF<br>**183 =** 18,000 µF | **M =** ±20%<br>**U =** –10%+75%<br>**T =** –10%+50% | **250** = 250 Vdc | | **0**= None<br>**1**= Polyester<br>**2**= PVC | **A** = Low Post<br>**B** = High Post<br>**D** = High Current | **Blank**= Standard Can<br>**S**= Stud Bottom<br>**P**= Stud with Thermal Pad |

Standard insulation is 0.008-in PVC sleeve with 0.01-in polypropylene end disk.

## Outline Drawing

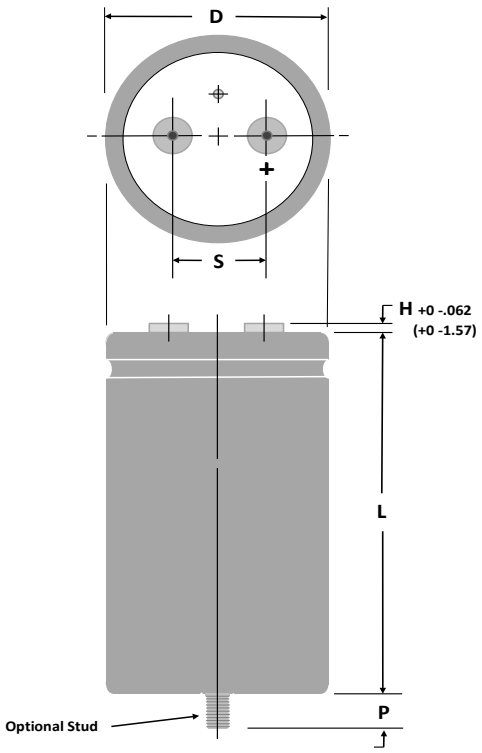


## Stud Dimensions

| Case Diam. | Stud Thread | P± 0.039″ (±1.0 mm) |
|---|---|---|
| 1.375 | M8 | 0.470″ (12.0) |
| 1.750 | M8 | 0.470″ (12.0) |
| 2.000 | M12 | 0.630″ (16.0) |
| 2.500 | M12 | 0.630″ (16.0) |
| 3.000 | M12 | 0.630″ (16.0) |

NOTE: With the stud-mount feature, a thermally-conductive disk can be inserted in the bottom flush with the outer insulating sleeve. This reduces the thermal resistance through the can bottom by 0.3 °C/W. Can Style P.

## Terminal Dimensions

| | For Case | | Post Diameter | | H max | | | min Full Thread | | Torque | |
|---|---|---|---|---|---|---|---|---|---|---|---|
| Terminal Style | Diameters | Code | in | mm | in | mm | Thread | in | mm | in·lb | N·m |
| Low Post | 1⅜ to 3 | A | 0.314 | 8.0 | 0.094 | 2.4 | 10–32 | 0.218 | 5.5 | 25 | 2.82 |
| High Post | 1⅜ to 3 | B | 0.314 | 8.0 | 0.281 | 7.1 | 10–32 | 0.375 | 9.5 | 25 | 2.82 |
| High Current, Med | 2½ to 3 | D | 0.434 | 11.0 | 0.190 | 4.8 | ¼–28 | 0.312 | 7.9 | 50 | 5.65 |

# Type 101C –55 °C to 105 °C Low-ESR, Wide-Temperature Grade

## Uninsulated Case Dimensions

For insulated case, add 0.024"(0.610 mm) to "D"and 0.030"(0.762 mm) to length.

| Case Code | Diam. (D) ±.031 Inches | Diam. (D) ±.78 mm | Length (L) ±.062 Inches | Length (L) ±1.57 mm | Terminals (S) ±0.015 Inches | Terminals (S) ±.38 mm | Typical Weight oz | Typical Weight g |
|---|---|---|---|---|---|---|---|---|
| AK | 1.375 | 34.93 | 1.625 | 41.28 | 0.50 | 12.70 | 1.9 | 54 |
| AA | 1.375 | 34.93 | 2.125 | 53.98 | 0.50 | 12.70 | 2.0 | 57 |
| AH | 1.375 | 34.93 | 2.625 | 66.68 | 0.50 | 12.70 | 2.7 | 77 |
| AB | 1.375 | 34.93 | 3.125 | 79.38 | 0.50 | 12.70 | 3.3 | 94 |
| AJ | 1.375 | 34.93 | 3.625 | 92.08 | 0.50 | 12.70 | 3.8 | 108 |
| AC | 1.375 | 34.93 | 4.125 | 104.78 | 0.50 | 12.70 | 4.4 | 125 |
| AD | 1.375 | 34.93 | 4.625 | 117.48 | 0.50 | 12.70 | 5.1 | 145 |
| AE | 1.375 | 34.93 | 5.125 | 130.18 | 0.50 | 12.70 | 6.8 | 193 |
| AF | 1.375 | 34.93 | 5.625 | 142.88 | 0.50 | 12.70 | 8.1 | 230 |
| EA | 1.750 | 44.45 | 2.125 | 53.98 | 0.75 | 19.05 | 2.7 | 76 |
| EH | 1.750 | 44.45 | 2.625 | 66.68 | 0.75 | 19.05 | 3.8 | 108 |
| EB | 1.750 | 44.45 | 3.125 | 79.38 | 0.75 | 19.05 | 5.1 | 145 |
| EJ | 1.750 | 44.45 | 3.625 | 92.08 | 0.75 | 19.05 | 6.8 | 193 |
| EC | 1.750 | 44.45 | 4.125 | 104.78 | 0.75 | 19.05 | 8.1 | 230 |
| ED | 1.750 | 44.45 | 4.625 | 117.48 | 0.75 | 19.05 | 9.0 | 255 |
| EE | 1.750 | 44.45 | 5.125 | 130.18 | 0.75 | 19.05 | 9.5 | 269 |
| EF | 1.750 | 44.45 | 5.625 | 142.88 | 0.75 | 19.05 | 10.5 | 298 |
| BA | 2.000 | 50.80 | 2.125 | 53.98 | 0.875 | 22.23 | 5.4 | 153 |
| BH | 2.000 | 50.80 | 2.625 | 66.68 | 0.875 | 22.23 | 6.1 | 173 |
| BB | 2.000 | 50.80 | 3.125 | 79.38 | 0.875 | 22.23 | 6.8 | 193 |
| BJ | 2.000 | 50.80 | 3.625 | 92.08 | 0.875 | 22.23 | 8.2 | 232 |
| BC | 2.000 | 50.80 | 4.125 | 104.78 | 0.875 | 22.23 | 9.5 | 269 |
| BD | 2.000 | 50.80 | 4.625 | 117.48 | 0.875 | 22.23 | 10.3 | 292 |
| BE | 2.000 | 50.80 | 5.125 | 130.18 | 0.875 | 22.23 | 10.7 | 303 |
| BF | 2.000 | 50.80 | 5.625 | 142.88 | 0.875 | 22.23 | 13.0 | 369 |
| CH | 2.500 | 63.50 | 2.625 | 66.68 | 1.125 | 28.58 | 9.2 | 261 |
| CB | 2.500 | 63.50 | 3.125 | 79.38 | 1.125 | 28.58 | 10.4 | 295 |
| CJ | 2.500 | 63.50 | 3.625 | 92.08 | 1.125 | 28.58 | 12.7 | 361 |
| CC | 2.500 | 63.50 | 4.125 | 104.78 | 1.125 | 28.58 | 15.0 | 425 |
| CD | 2.500 | 63.50 | 4.625 | 117.48 | 1.125 | 28.58 | 17.2 | 488 |
| CE | 2.500 | 63.50 | 5.125 | 130.18 | 1.125 | 28.58 | 19.3 | 547 |
| CF | 2.500 | 63.50 | 5.625 | 142.88 | 1.125 | 28.58 | 21.4 | 607 |
| DB | 3.000 | 76.20 | 3.125 | 79.38 | 1.25 | 31.75 | 16.7 | 473 |
| DJ | 3.000 | 76.20 | 3.625 | 92.08 | 1.25 | 31.75 | 20.0 | 567 |
| DC | 3.000 | 76.20 | 4.125 | 104.78 | 1.25 | 31.75 | 22.2 | 629 |
| DD | 3.000 | 76.20 | 4.625 | 117.48 | 1.25 | 31.75 | 25.5 | 723 |
| DE | 3.000 | 76.20 | 5.125 | 130.18 | 1.25 | 31.75 | 30.0 | 850 |
| DF | 3.000 | 76.20 | 5.625 | 142.88 | 1.25 | 31.75 | 31.9 | 904 |
| DP | 3.000 | 76.20 | 5.875 | 149.23 | 1.25 | 31.75 | 32.8 | 931 |
| DN | 3.000 | 76.20 | 7.625 | 193.68 | 1.25 | 31.75 | 39.5 | 1119 |
| DG | 3.000 | 76.20 | 8.625 | 219.08 | 1.25 | 31.75 | 43.3 | 1227 |

# Type 101C –55 °C to 105 °C Low-ESR, Wide-Temperature Grade

## Ratings

| Cap. (µF) | Catalog Part Number | ESR Max @ 25 °C 120 Hz (mΩ) | Ripple Max @ 85 °C 120 Hz (A) | Nominal Size D x L (in) |
|---|---|---|---|---|
| **7.5 Vdc (10 Vdc Surge)** | | | | |
| 28,000 | 101C283U7R5AK2B | 38.2 | 6.1 | 1 3/8 x 1 5/8 |
| 47,000 | 101C473U7R5AA2B | 25.0 | 8.7 | 1 3/8 x 2 1/8 |
| 66,000 | 101C663U7R5AH2B | 19.0 | 11.4 | 1 3/8 x 2 5/8 |
| 79,000 | 101C793U7R5BA2B | 18.3 | 14.0 | 2 x 2 1/8 |
| 84,000 | 101C843U7R5EA2B | 22.6 | 11.6 | 1 3/4 x 2 1/8 |
| 84,000 | 101C843U7R5AB2B | 15.4 | 13.8 | 1 3/8 x 3 1/8 |
| 100,000 | 101C104U7R5AJ2B | 13.2 | 15.9 | 1 3/8 x 3 5/8 |
| 120,000 | 101C124U7R5EH2B | 16.5 | 14.7 | 1 3/4 x 2 5/8 |
| 120,000 | 101C124U7R5BH2B | 12.4 | 18.3 | 2 x 2 5/8 |
| 120,000 | 101C124U7R5AC2B | 12.1 | 17.4 | 1 3/8 x 4 1/8 |
| 140,000 | 101C144U7R5AD2B | 10.8 | 19.2 | 1 3/8 x 4 5/8 |
| 160,000 | 101C164U7R5EB2B | 13.2 | 17.5 | 1 3/4 x 3 1/8 |
| 160,000 | 101C164U7R5AE2B | 9.9 | 20.9 | 1 3/8 x 5 1/8 |
| 170,000 | 101C174U7R5BB2B | 8.5 | 23.6 | 2 x 3 1/8 |
| 180,000 | 101C184U7R5AF2B | 9.1 | 22.6 | 1 3/8 x 5 5/8 |
| 200,000 | 101C204U7R5EJ2B | 11.1 | 20.1 | 1 3/4 x 3 5/8 |
| 210,000 | 101C214U7R5CH2B | 9.4 | 24.2 | 2 1/2 x 2 5/8 |
| 220,000 | 101C224U7R5EC2B | 8.2 | 24.4 | 1 3/4 x 4 1/8 |
| 220,000 | 101C224U7R5BJ2B | 7.6 | 26.2 | 2 x 3 5/8 |
| 260,000 | 101C264U7R5BC2B | 6.0 | 31.0 | 2 x 4 1/8 |
| 270,000 | 101C274U7R5ED2B | 8.7 | 24.7 | 1 3/4 x 4 5/8 |
| 280,000 | 101C284U7R5CB2B | 7.2 | 29.4 | 2 1/2 x 3 1/8 |
| 300,000 | 101C304U7R5BD2B | 5.7 | 32.9 | 2 x 4 5/8 |
| 310,000 | 101C314U7R5EE2B | 7.9 | 26.8 | 1 3/4 x 5 1/8 |
| 350,000 | 101C354U7R5EF2B | 7.4 | 28.8 | 1 3/4 x 5 5/8 |
| 350,000 | 101C354U7R5BE2B | 5.2 | 35.9 | 2 x 5 1/8 |
| 360,000 | 101C364U7R5CJ2D | 5.9 | 34.2 | 2 1/2 x 3 5/8 |
| 390,000 | 101C394U7R5DB2D | 7.1 | 33.1 | 3 x 3 1/8 |
| 390,000 | 101C394U7R5BF2B | 4.9 | 38.2 | 2 x 5 5/8 |
| 430,000 | 101C434U7R5CC2D | 4.2 | 42.4 | 2 1/2 x 4 1/8 |
| 490,000 | 101C494U7R5DJ2D | 5.8 | 38.5 | 3 x 3 5/8 |
| 490,000 | 101C494U7R5CD2D | 4.4 | 42.8 | 2 1/2 x 4 5/8 |
| 570,000 | 101C574U7R5CE2D | 4.0 | 46.7 | 2 1/2 x 5 1/8 |
| 610,000 | 101C614U7R5DC2D | 4.6 | 45.2 | 3 x 4 1/8 |
| 640,000 | 101C644U7R5CF2D | 3.4 | 52.1 | 2 1/2 x 5 5/8 |
| 700,000 | 101C704U7R5DD2D | 4.0 | 50.0 | 3 x 4 5/8 |
| 810,000 | 101C814U7R5DE2D | 3.7 | 53.6 | 3 x 5 1/8 |
| 910,000 | 101C914U7R5DF2D | 3.4 | 57.8 | 3 x 5 5/8 |
| 960,000 | 101C964U7R5DP2D | 3.4 | 58.8 | 3 x 5 7/8 |
| 1,300,000 | 101C135U7R5DN2D | 2.8 | 70.2 | 3 x 7 5/8 |
| 1,500,000 | 101C155U7R5DG2D | 2.5 | 76.4 | 3 x 8 5/8 |

| Cap. (µF) | Catalog Part Number | ESR Max @ 25 °C 120 Hz (mΩ) | Ripple Max @ 85 °C 120 Hz (A) | Nominal Size D x L (in) |
|---|---|---|---|---|
| **10 Vdc (15 Vdc Surge)** | | | | |
| 25,000 | 101C253U010AK2B | 36.0 | 6.2 | 1 3/8 x 1 5/8 |
| 41,000 | 101C413U010AA2B | 23.9 | 8.9 | 1 3/8 x 2 1/8 |
| 58,000 | 101C583U010AH2B | 18.1 | 11.7 | 1 3/8 x 2 5/8 |
| 68,000 | 101C683U010BA2B | 17.8 | 14.2 | 2 x 2 1/8 |
| 69,000 | 101C693U010EA2B | 22.8 | 11.6 | 1 3/4 x 2 1/8 |
| 74,000 | 101C743U010AB2B | 14.6 | 14.2 | 1 3/8 x 3 1/8 |
| 89,000 | 101C893U010AJ2B | 12.5 | 16.4 | 1 3/8 x 3 5/8 |
| 99,000 | 101C993U010EH2B | 16.6 | 14.6 | 1 3/4 x 2 5/8 |
| 110,000 | 101C114U010BH2B | 12.1 | 18.6 | 2 x 2 5/8 |
| 110,000 | 101C114U010AC2B | 11.3 | 18.1 | 1 3/8 x 4 1/8 |
| 120,000 | 101C124U010AD2B | 10.3 | 19.7 | 1 3/8 x 4 5/8 |
| 130,000 | 101C134U010EB2B | 13.2 | 17.4 | 1 3/4 x 3 1/8 |
| 140,000 | 101C144U010AE2B | 9.4 | 21.4 | 1 3/8 x 5 1/8 |
| 150,000 | 101C154U010BB2B | 8.1 | 24.2 | 2 x 3 1/8 |
| 160,000 | 101C164U010EJ2B | 11.1 | 20.0 | 1 3/4 x 3 5/8 |
| 160,000 | 101C164U010AF2B | 8.7 | 23.1 | 1 3/8 x 5 5/8 |
| 180,000 | 101C184U010CH2B | 9.2 | 24.5 | 2 1/2 x 2 5/8 |
| 180,000 | 101C184U010BJ2B | 7.4 | 26.5 | 2 x 3 5/8 |
| 190,000 | 101C194U010EC2B | 8.2 | 24.4 | 1 3/4 x 4 1/8 |
| 220,000 | 101C224U010ED2B | 8.7 | 24.7 | 1 3/4 x 4 5/8 |
| 230,000 | 101C234U010BC2B | 5.7 | 31.7 | 2 x 4 1/8 |
| 240,000 | 101C244U010CB2B | 7.0 | 29.7 | 2 1/2 x 3 1/8 |
| 250,000 | 101C254U010EE2B | 8.0 | 26.7 | 1 3/4 x 5 1/8 |
| 260,000 | 101C264U010BD2B | 5.5 | 33.5 | 2 x 4 5/8 |
| 280,000 | 101C284U010EF2B | 7.4 | 28.7 | 1 3/4 x 5 5/8 |
| 300,000 | 101C304U010CJ2D | 5.7 | 34.6 | 2 1/2 x 3 5/8 |
| 300,000 | 101C304U010BE2B | 5.0 | 36.5 | 2 x 5 1/8 |
| 340,000 | 101C344U010BF2B | 4.7 | 38.9 | 2 x 5 5/8 |
| 360,000 | 101C364U010DB2D | 7.0 | 33.4 | 3 x 3 1/8 |
| 370,000 | 101C374U010CC2D | 4.0 | 43.0 | 2 1/2 x 4 1/8 |
| 430,000 | 101C434U010CD2D | 4.3 | 43.5 | 2 1/2 x 4 5/8 |
| 450,000 | 101C454U010DJ2D | 5.7 | 38.8 | 3 x 3 5/8 |
| 500,000 | 101C504U010CE2D | 3.8 | 47.5 | 2 1/2 x 5 1/8 |
| 550,000 | 101C554U010DC2D | 4.5 | 45.5 | 3 x 4 1/8 |
| 560,000 | 101C564U010CF2D | 3.3 | 53.0 | 2 1/2 x 5 5/8 |
| 640,000 | 101C644U010DD2D | 4.0 | 50.4 | 3 x 4 5/8 |
| 740,000 | 101C744U010DE2D | 3.7 | 54.0 | 3 x 5 1/8 |
| 840,000 | 101C844U010DF2D | 3.3 | 58.2 | 3 x 5 5/8 |
| 880,000 | 101C884U010DP2D | 3.3 | 59.2 | 3 x 5 7/8 |
| 1,200,000 | 101C125U010DN2D | 2.8 | 70.7 | 3 x 7 5/8 |
| 1,400,000 | 101C145U010DG2D | 2.5 | 76.9 | 3 x 8 5/8 |

# Type 101C –55 °C to 105 °C Low-ESR, Wide-Temperature Grade

| Cap. (µF) | Catalog Part Number | ESR Max @ 25 °C 120 Hz (mΩ) | Ripple Max @ 85 °C 120 Hz (A) | Nominal Size D x L (in) |
|---|---|---|---|---|
| **16 Vdc (25 Vdc Surge)** | | | | |
| 16,000 | 101C163U016AK2B | 39.2 | 6.0 | 1 3/8 x 1 5/8 |
| 27,000 | 101C273U016AA2B | 26.0 | 8.5 | 1 3/8 x 2 1/8 |
| 38,000 | 101C383U016AH2B | 20.0 | 11.1 | 1 3/8 x 2 5/8 |
| 45,000 | 101C453U016BA2B | 19.1 | 13.7 | 2 x 2 1/8 |
| 46,000 | 101C463U016EA2B | 24.3 | 11.2 | 1 3/4 x 2 1/8 |
| 49,000 | 101C493U016AB2B | 15.9 | 13.6 | 1 3/8 x 3 1/8 |
| 59,000 | 101C593U016AJ2B | 13.5 | 15.7 | 1 3/8 x 3 5/8 |
| 66,000 | 101C663U016EH2B | 17.7 | 14.2 | 1 3/4 x 2 5/8 |
| 71,000 | 101C713U016BH2B | 13.0 | 18.0 | 2 x 2 5/8 |
| 73,000 | 101C733U016AC2B | 12.2 | 17.4 | 1 3/8 x 4 1/8 |
| 82,000 | 101C823U016AD2B | 11.1 | 19.0 | 1 3/8 x 4 5/8 |
| 86,000 | 101C863U016EB2B | 14.1 | 16.9 | 1 3/4 x 3 1/8 |
| 93,000 | 101C933U016AE2B | 10.1 | 20.6 | 1 3/8 x 5 1/8 |
| 100,000 | 101C104U016BB2B | 8.6 | 23.4 | 2 x 3 1/8 |
| 110,000 | 101C114U016EJ2B | 11.8 | 19.4 | 1 3/4 x 3 5/8 |
| 110,000 | 101C114U016AF2B | 9.3 | 22.3 | 1 3/8 x 5 5/8 |
| 120,000 | 101C124U016CH2B | 9.8 | 23.7 | 2 1/2 x 2 5/8 |
| 120,000 | 101C124U016BJ2B | 8.0 | 25.7 | 2 x 3 5/8 |
| 130,000 | 101C134U016EC2B | 8.6 | 23.8 | 1 3/4 x 4 1/8 |
| 150,000 | 101C154U016ED2B | 9.2 | 24.0 | 1 3/4 x 4 5/8 |
| 160,000 | 101C164U016CB2B | 7.5 | 28.9 | 2 1/2 x 3 1/8 |
| 160,000 | 101C164U016BC2B | 6.0 | 30.9 | 2 x 4 1/8 |
| 170,000 | 101C174U016EE2B | 8.4 | 26.0 | 1 3/4 x 5 1/8 |
| 170,000 | 101C174U016BD2B | 5.9 | 32.5 | 2 x 4 5/8 |
| 190,000 | 101C194U016EF2B | 7.8 | 28.0 | 1 3/4 x 5 5/8 |
| 200,000 | 101C204U016CJ2D | 6.1 | 33.6 | 2 1/2 x 3 5/8 |
| 200,000 | 101C204U016BE2B | 5.3 | 35.4 | 2 x 5 1/8 |
| 230,000 | 101C234U016BF2B | 4.9 | 38.0 | 2 x 5 5/8 |
| 240,000 | 101C244U016DB2D | 7.3 | 32.7 | 3 x 3 1/8 |
| 250,000 | 101C254U016CC2D | 4.3 | 41.9 | 2 1/2 x 4 1/8 |
| 290,000 | 101C294U016CD2D | 4.5 | 42.3 | 2 1/2 x 4 5/8 |
| 300,000 | 101C304U016DJ2D | 5.9 | 38.1 | 3 x 3 5/8 |
| 330,000 | 101C334U016CE2D | 4.0 | 46.2 | 2 1/2 x 5 1/8 |
| 360,000 | 101C364U016DC2D | 4.7 | 44.6 | 3 x 4 1/8 |
| 370,000 | 101C374U016CF2D | 3.4 | 51.6 | 2 1/2 x 5 5/8 |
| 430,000 | 101C434U016DD2D | 4.1 | 49.5 | 3 x 4 5/8 |
| 490,000 | 101C494U016DE2D | 3.8 | 53.0 | 3 x 5 1/8 |
| 560,000 | 101C564U016DF2D | 3.5 | 57.2 | 3 x 5 5/8 |
| 590,000 | 101C594U016DP2D | 3.4 | 58.2 | 3 x 5 7/8 |
| 800,000 | 101C804U016DN2D | 2.9 | 69.6 | 3 x 7 5/8 |
| 920,000 | 101C924U016DG2D | 2.6 | 75.8 | 3 x 8 5/8 |

| Cap. (µF) | Catalog Part Number | ESR Max @ 25 °C 120 Hz (mΩ) | Ripple Max @ 85 °C 120 Hz (A) | Nominal Size D x L (in) |
|---|---|---|---|---|
| **20 Vdc (30 Vdc Surge)** | | | | |
| 13,000 | 101C133U020AK2B | 39.2 | 6.0 | 1 3/8 x 1 5/8 |
| 21,000 | 101C213U020AA2B | 26.0 | 8.5 | 1 3/8 x 2 1/8 |
| 29,000 | 101C293U020AH2B | 20.0 | 11.1 | 1 3/8 x 2 5/8 |
| 34,000 | 101C343U020BA2B | 19.1 | 13.7 | 2 x 2 1/8 |
| 35,000 | 101C353U020EA2B | 24.3 | 11.2 | 1 3/4 x 2 1/8 |
| 38,000 | 101C383U020AB2B | 15.9 | 13.6 | 1 3/8 x 3 1/8 |
| 45,000 | 101C453U020AJ2B | 13.5 | 15.7 | 1 3/8 x 3 5/8 |
| 50,000 | 101C503U020EH2B | 17.7 | 14.2 | 1 3/4 x 2 5/8 |
| 54,000 | 101C543U020BH2B | 13.0 | 18.0 | 2 x 2 5/8 |
| 55,000 | 101C553U020AC2B | 12.2 | 17.4 | 1 3/8 x 4 1/8 |
| 62,000 | 101C623U020AD2B | 11.1 | 19.0 | 1 3/8 x 4 5/8 |
| 66,000 | 101C663U020EB2B | 14.1 | 16.9 | 1 3/4 x 3 1/8 |
| 71,000 | 101C713U020AE2B | 10.1 | 20.6 | 1 3/8 x 5 1/8 |
| 77,000 | 101C773U020BB2B | 8.6 | 23.4 | 2 x 3 1/8 |
| 80,000 | 101C803U020AF2B | 9.3 | 22.3 | 1 3/8 x 5 5/8 |
| 81,000 | 101C813U020EJ2B | 11.8 | 19.4 | 1 3/4 x 3 5/8 |
| 89,000 | 101C893U020CH2B | 9.8 | 23.7 | 2 1/2 x 2 5/8 |
| 94,000 | 101C943U020BJ2B | 8.0 | 25.7 | 2 x 3 5/8 |
| 98,000 | 101C983U020EC2B | 8.6 | 23.8 | 1 3/4 x 4 1/8 |
| 110,000 | 101C114U020ED2B | 9.2 | 24.0 | 1 3/4 x 4 5/8 |
| 120,000 | 101C124U020CB2B | 7.5 | 28.9 | 2 1/2 x 3 1/8 |
| 120,000 | 101C124U020BC2B | 6.0 | 30.9 | 2 x 4 1/8 |
| 130,000 | 101C134U020EE2B | 8.4 | 26.0 | 1 3/4 x 5 1/8 |
| 130,000 | 101C134U020BD2B | 5.9 | 32.5 | 2 x 4 5/8 |
| 140,000 | 101C144U020EF2B | 7.8 | 28.0 | 1 3/4 x 5 5/8 |
| 150,000 | 101C154U020CJ2D | 6.1 | 33.6 | 2 1/2 x 3 5/8 |
| 150,000 | 101C154U020BE2B | 5.3 | 35.4 | 2 x 5 1/8 |
| 180,000 | 101C184U020DB2D | 7.3 | 32.7 | 3 x 3 1/8 |
| 180,000 | 101C184U020BF2B | 4.9 | 38.0 | 2 x 5 5/8 |
| 190,000 | 101C194U020CC2D | 4.3 | 41.9 | 2 1/2 x 4 1/8 |
| 220,000 | 101C224U020CD2D | 4.5 | 42.3 | 2 1/2 x 4 5/8 |
| 230,000 | 101C234U020DJ2D | 5.9 | 38.1 | 3 x 3 5/8 |
| 250,000 | 101C254U020CE2D | 4.0 | 46.2 | 2 1/2 x 5 1/8 |
| 280,000 | 101C284U020DC2D | 4.7 | 44.6 | 3 x 4 1/8 |
| 280,000 | 101C284U020CF2D | 3.4 | 51.6 | 2 1/2 x 5 5/8 |
| 330,000 | 101C334U020DD2D | 4.1 | 49.5 | 3 x 4 5/8 |
| 380,000 | 101C384U020DE2D | 3.8 | 53.0 | 3 x 5 1/8 |
| 420,000 | 101C424U020DF2D | 3.5 | 57.2 | 3 x 5 5/8 |
| 450,000 | 101C454U020DP2D | 3.4 | 58.2 | 3 x 5 7/8 |
| 610,000 | 101C614U020DN2D | 2.9 | 69.4 | 3 x 7 5/8 |
| 710,000 | 101C714U020DG2D | 2.6 | 75.5 | 3 x 8 5/8 |

# Type 101C –55 °C to 105 °C Low-ESR, Wide-Temperature Grade

| Cap. (µF) | Catalog Part Number | ESR Max @ 25 °C 120 Hz (mΩ) | Ripple Max @ 85 °C 120 Hz (A) | Nominal Size D x L (in) |
|---|---|---|---|---|
| **25 Vdc (40 Vdc Surge)** | | | | |
| 9,900 | 101C992U025AK2B | 42.6 | 5.7 | 1 3/8 x 1 5/8 |
| 16,000 | 101C163U025AA2B | 28.2 | 8.2 | 1 3/8 x 2 1/8 |
| 23,000 | 101C233U025AH2B | 20.9 | 10.8 | 1 3/8 x 2 5/8 |
| 27,000 | 101C273U025EA2B | 25.1 | 11.0 | 1 3/4 x 2 1/8 |
| 27,000 | 101C273U025BA2B | 19.9 | 13.5 | 2 x 2 1/8 |
| 30,000 | 101C303U025AB2B | 16.6 | 13.3 | 1 3/8 x 3 1/8 |
| 35,000 | 101C353U025AJ2B | 14.2 | 15.4 | 1 3/8 x 3 5/8 |
| 39,000 | 101C393U025EH2B | 18.3 | 13.9 | 1 3/4 x 2 5/8 |
| 42,000 | 101C423U025BH2B | 13.5 | 17.6 | 2 x 2 5/8 |
| 43,000 | 101C433U025AC2B | 12.7 | 17.0 | 1 3/8 x 4 1/8 |
| 49,000 | 101C493U025AD2B | 11.6 | 18.6 | 1 3/8 x 4 5/8 |
| 52,000 | 101C523U025EB2B | 14.5 | 16.6 | 1 3/4 x 3 1/8 |
| 56,000 | 101C563U025AE2B | 10.6 | 20.2 | 1 3/8 x 5 1/8 |
| 60,000 | 101C603U025BB2B | 9.0 | 22.9 | 2 x 3 1/8 |
| 63,000 | 101C633U025AF2B | 9.7 | 21.9 | 1 3/8 x 5 5/8 |
| 64,000 | 101C643U025EJ2B | 12.2 | 19.1 | 1 3/4 x 3 5/8 |
| 70,000 | 101C703U025CH2B | 10.1 | 23.3 | 2 1/2 x 2 5/8 |
| 73,000 | 101C733U025BJ2B | 8.3 | 25.2 | 2 x 3 5/8 |
| 77,000 | 101C773U025EC2B | 9.9 | 22.2 | 1 3/4 x 4 1/8 |
| 88,000 | 101C883U025ED2B | 9.5 | 23.6 | 1 3/4 x 4 5/8 |
| 90,000 | 101C903U025BC2B | 6.4 | 30.0 | 2 x 4 1/8 |
| 95,000 | 101C953U025CB2B | 7.7 | 28.4 | 2 1/2 x 3 1/8 |
| 100,000 | 101C104U025EE2B | 8.6 | 25.7 | 1 3/4 x 5 1/8 |
| 100,000 | 101C104U025BD2B | 6.1 | 31.9 | 2 x 4 5/8 |
| 110,000 | 101C114U025EF2B | 8.0 | 27.6 | 1 3/4 x 5 5/8 |
| 120,000 | 101C124U025CJ2D | 6.3 | 33.1 | 2 1/2 x 3 5/8 |
| 120,000 | 101C124U025BE2B | 5.5 | 34.8 | 2 x 5 1/8 |
| 140,000 | 101C144U025DB2D | 7.4 | 32.4 | 3 x 3 1/8 |
| 140,000 | 101C144U025BF2B | 5.1 | 37.4 | 2 x 5 5/8 |
| 150,000 | 101C154U025CC2D | 4.5 | 40.6 | 2 1/2 x 4 1/8 |
| 170,000 | 101C174U025CD2D | 4.7 | 41.6 | 2 1/2 x 4 5/8 |
| 180,000 | 101C184U025DJ2D | 6.0 | 37.7 | 3 x 3 5/8 |
| 200,000 | 101C204U025CE2D | 4.2 | 45.5 | 2 1/2 x 5 1/8 |
| 220,000 | 101C224U025DC2D | 4.8 | 44.1 | 3 x 4 1/8 |
| 220,000 | 101C224U025CF2D | 3.6 | 50.3 | 2 1/2 x 5 5/8 |
| 260,000 | 101C264U025DD2D | 4.5 | 47.3 | 3 x 4 5/8 |
| 290,000 | 101C294U025DE2D | 4.0 | 51.6 | 3 x 5 1/8 |
| 330,000 | 101C334U025DF2D | 3.5 | 56.7 | 3 x 5 5/8 |
| 350,000 | 101C354U025DP2D | 3.5 | 57.7 | 3 x 5 7/8 |
| 480,000 | 101C484U025DN2D | 2.9 | 69.0 | 3 x 7 5/8 |
| 550,000 | 101C554U025DG2D | 2.6 | 75.2 | 3 x 8 5/8 |

| Cap. (µF) | Catalog Part Number | ESR Max @ 25 °C 120 Hz (mΩ) | Ripple Max @ 85 °C 120 Hz (A) | Nominal Size D x L (in) |
|---|---|---|---|---|
| **30 Vdc (45 Vdc Surge)** | | | | |
| 5,400 | 101C542U030AK2B | 43.9 | 5.6 | 1 3/8 x 1 5/8 |
| 13,000 | 101C133U030AA2B | 29.8 | 8.0 | 1 3/8 x 2 1/8 |
| 19,000 | 101C193U030AH2B | 21.4 | 10.7 | 1 3/8 x 2 5/8 |
| 23,000 | 101C233U030EA2B | 23.1 | 11.5 | 1 3/4 x 2 1/8 |
| 23,000 | 101C233U030BA2B | 18.8 | 13.8 | 2 x 2 1/8 |
| 24,000 | 101C243U030AB2B | 16.0 | 13.6 | 1 3/8 x 3 1/8 |
| 30,000 | 101C303U030AJ2B | 14.1 | 15.4 | 1 3/8 x 3 5/8 |
| 33,000 | 101C333U030EH2B | 16.9 | 14.5 | 1 3/4 x 2 5/8 |
| 36,000 | 101C363U030AC2B | 13.0 | 16.8 | 1 3/8 x 4 1/8 |
| 36,000 | 101C363U030BH2B | 12.8 | 18.1 | 2 x 2 5/8 |
| 41,000 | 101C413U030AD2B | 11.6 | 18.6 | 1 3/8 x 4 5/8 |
| 44,000 | 101C443U030EB2B | 13.4 | 17.3 | 1 3/4 x 3 1/8 |
| 47,000 | 101C473U030AE2B | 10.6 | 20.2 | 1 3/8 x 5 1/8 |
| 49,000 | 101C493U030BB2B | 8.7 | 23.3 | 2 x 3 1/8 |
| 53,000 | 101C533U030AF2B | 9.8 | 21.8 | 1 3/8 x 5 5/8 |
| 54,000 | 101C543U030EJ2B | 11.3 | 19.9 | 1 3/4 x 3 5/8 |
| 59,000 | 101C593U030CH2B | 9.3 | 24.4 | 2 1/2 x 2 5/8 |
| 62,000 | 101C623U030BJ2B | 7.8 | 25.8 | 2 x 3 5/8 |
| 64,000 | 101C643U030EC2B | 9.2 | 23.0 | 1 3/4 x 4 1/8 |
| 75,000 | 101C753U030ED2B | 8.4 | 25.1 | 1 3/4 x 4 5/8 |
| 75,000 | 101C753U030BC2B | 6.3 | 30.1 | 2 x 4 1/8 |
| 81,000 | 101C813U030CB2B | 7.1 | 29.7 | 2 1/2 x 3 1/8 |
| 85,000 | 101C853U030EE2B | 7.9 | 26.9 | 1 3/4 x 5 1/8 |
| 88,000 | 101C883U030BD2B | 5.8 | 32.7 | 2 x 4 5/8 |
| 95,000 | 101C953U030EF2B | 7.5 | 28.5 | 1 3/4 x 5 5/8 |
| 100,000 | 101C104U030CJ2D | 5.7 | 34.6 | 2 1/2 x 3 5/8 |
| 100,000 | 101C104U030BE2B | 5.2 | 35.6 | 2 x 5 1/8 |
| 110,000 | 101C114U030BF2B | 4.8 | 38.4 | 2 x 5 5/8 |
| 120,000 | 101C124U030DB2D | 7.0 | 33.3 | 3 x 3 1/8 |
| 120,000 | 101C124U030CC2D | 4.7 | 40.0 | 2 1/2 x 4 1/8 |
| 150,000 | 101C154U030DJ2D | 5.7 | 38.7 | 3 x 3 5/8 |
| 150,000 | 101C154U030CD2D | 4.3 | 43.4 | 2 1/2 x 4 5/8 |
| 170,000 | 101C174U030CE2D | 3.8 | 47.4 | 2 1/2 x 5 1/8 |
| 180,000 | 101C184U030DC2D | 4.8 | 43.9 | 3 x 4 1/8 |
| 190,000 | 101C194U030CF2D | 3.5 | 51.2 | 2 1/2 x 5 5/8 |
| 220,000 | 101C224U030DD2D | 4.3 | 48.5 | 3 x 4 5/8 |
| 250,000 | 101C254U030DE2D | 3.8 | 52.8 | 3 x 5 1/8 |
| 280,000 | 101C284U030DF2D | 3.5 | 56.9 | 3 x 5 5/8 |
| 300,000 | 101C304U030DP2D | 3.4 | 58.8 | 3 x 5 7/8 |
| 410,000 | 101C414U030DN2D | 2.9 | 69.5 | 3 x 7 5/8 |
| 470,000 | 101C474U030DG2D | 2.6 | 75.8 | 3 x 8 5/8 |

# Type 101C –55 °C to 105 °C Low-ESR, Wide-Temperature Grade

| Cap. (µF) | Catalog Part Number | ESR Max @ 25 °C 120 Hz (mΩ) | Ripple Max @ 85 °C 120 Hz (A) | Nominal Size D x L (in) |
|---|---|---|---|---|
| **40 Vdc (55 Vdc Surge)** | | | | |
| 5,400 | 101C542U040AK2B | 47.6 | 5.4 | 1 3/8 x 1 5/8 |
| 9,000 | 101C902U040AA2B | 32.3 | 7.6 | 1 3/8 x 2 1/8 |
| 13,000 | 101C133U040AH2B | 23.1 | 10.3 | 1 3/8 x 2 5/8 |
| 16,000 | 101C163U040EA2B | 26.6 | 10.7 | 1 3/4 x 2 1/8 |
| 16,000 | 101C163U040BA2B | 21.2 | 13.0 | 2 x 2 1/8 |
| 17,000 | 101C173U040AB2B | 17.3 | 13.1 | 1 3/8 x 3 1/8 |
| 21,000 | 101C213U040AJ2B | 15.2 | 14.8 | 1 3/8 x 3 5/8 |
| 23,000 | 101C233U040EH2B | 19.3 | 13.5 | 1 3/4 x 2 5/8 |
| 25,000 | 101C253U040BH2B | 14.3 | 17.1 | 2 x 2 5/8 |
| 25,000 | 101C253U040AC2B | 14.0 | 16.2 | 1 3/8 x 4 1/8 |
| 29,000 | 101C293U040AD2B | 12.4 | 17.9 | 1 3/8 x 4 5/8 |
| 30,000 | 101C303U040EB2B | 15.4 | 16.2 | 1 3/4 x 3 1/8 |
| 33,000 | 101C333U040AE2B | 11.3 | 19.6 | 1 3/8 x 5 1/8 |
| 34,000 | 101C343U040BB2B | 9.8 | 22.0 | 2 x 3 1/8 |
| 37,000 | 101C373U040EJ2B | 12.9 | 18.6 | 1 3/4 x 3 5/8 |
| 37,000 | 101C373U040AF2B | 10.4 | 21.1 | 1 3/8 x 5 5/8 |
| 41,000 | 101C413U040CH2B | 10.7 | 22.7 | 2 1/2 x 2 5/8 |
| 43,000 | 101C433U040BJ2B | 8.8 | 24.4 | 2 x 3 5/8 |
| 45,000 | 101C453U040EC2B | 10.5 | 21.6 | 1 3/4 x 4 1/8 |
| 52,000 | 101C523U040ED2B | 9.5 | 23.6 | 1 3/4 x 4 5/8 |
| 52,000 | 101C523U040BC2B | 7.1 | 28.5 | 2 x 4 1/8 |
| 56,000 | 101C563U040CB2B | 8.1 | 27.6 | 2 1/2 x 3 1/8 |
| 59,000 | 101C593U040EE2B | 8.9 | 25.4 | 1 3/4 x 5 1/8 |
| 61,000 | 101C613U040BD2B | 6.5 | 31.0 | 2 x 4 5/8 |
| 66,000 | 101C663U040EF2B | 8.4 | 26.9 | 1 3/4 x 5 5/8 |
| 70,000 | 101C703U040BE2B | 5.8 | 33.8 | 2 x 5 1/8 |
| 71,000 | 101C713U040CJ2D | 6.6 | 32.2 | 2 1/2 x 3 5/8 |
| 79,000 | 101C793U040BF2B | 5.3 | 36.5 | 2 x 5 5/8 |
| 83,000 | 101C833U040DB2D | 8.6 | 30.1 | 3 x 3 1/8 |
| 86,000 | 101C863U040CC2D | 5.4 | 37.3 | 2 1/2 x 4 1/8 |
| 100,000 | 101C104U040CD2D | 4.9 | 40.6 | 2 1/2 x 4 5/8 |
| 110,000 | 101C114U040DJ2D | 7.0 | 35.1 | 3 x 3 5/8 |
| 120,000 | 101C124U040CE2D | 4.4 | 44.4 | 2 1/2 x 5 1/8 |
| 130,000 | 101C134U040DC2D | 5.3 | 41.9 | 3 x 4 1/8 |
| 130,000 | 101C134U040CF2D | 4.0 | 48.0 | 2 1/2 x 5 5/8 |
| 150,000 | 101C154U040DD2D | 5.2 | 44.0 | 3 x 4 5/8 |
| 170,000 | 101C174U040DE2D | 4.6 | 48.1 | 3 x 5 1/8 |
| 190,000 | 101C194U040DF2D | 4.2 | 51.9 | 3 x 5 5/8 |
| 210,000 | 101C214U040DP2D | 4.0 | 53.8 | 3 x 5 7/8 |
| 280,000 | 101C284U040DN2D | 3.4 | 63.9 | 3 x 7 5/8 |
| 330,000 | 101C334U040DG2D | 3.0 | 69.9 | 3 x 8 5/8 |

| Cap. (µF) | Catalog Part Number | ESR Max @ 25 °C 120 Hz (mΩ) | Ripple Max @ 85 °C 120 Hz (A) | Nominal Size D x L (in) |
|---|---|---|---|---|
| **50 Vdc (75 Vdc Surge)** | | | | |
| 3,800 | 101C382U050AK2B | 48.4 | 5.4 | 1 3/8 x 1 5/8 |
| 7,000 | 101C702U050AA2B | 30.8 | 7.8 | 1 3/8 x 2 1/8 |
| 10,000 | 101C103U050AH2B | 22.0 | 10.5 | 1 3/8 x 2 5/8 |
| 12,000 | 101C123U050EA2B | 26.5 | 10.7 | 1 3/4 x 2 1/8 |
| 12,000 | 101C123U050BA2B | 20.8 | 13.2 | 2 x 2 1/8 |
| 13,000 | 101C133U050AB2B | 17.5 | 13.0 | 1 3/8 x 3 1/8 |
| 16,000 | 101C163U050AJ2B | 14.6 | 15.2 | 1 3/8 x 3 5/8 |
| 18,000 | 101C183U050EH2B | 19.3 | 13.6 | 1 3/4 x 2 5/8 |
| 19,000 | 101C193U050BH2B | 14.1 | 17.2 | 2 x 2 5/8 |
| 19,000 | 101C193U050AC2B | 13.4 | 16.6 | 1 3/8 x 4 1/8 |
| 22,000 | 101C223U050AD2B | 11.9 | 18.3 | 1 3/8 x 4 5/8 |
| 24,000 | 101C243U050EB2B | 15.3 | 16.2 | 1 3/4 x 3 1/8 |
| 25,000 | 101C253U050AE2B | 10.8 | 20.0 | 1 3/8 x 5 1/8 |
| 27,000 | 101C273U050BB2B | 9.6 | 22.2 | 2 x 3 1/8 |
| 29,000 | 101C293U050EJ2B | 12.8 | 18.6 | 1 3/4 x 3 5/8 |
| 29,000 | 101C293U050AF2B | 10.0 | 21.5 | 1 3/8 x 5 5/8 |
| 32,000 | 101C323U050CH2B | 9.6 | 24.0 | 2 1/2 x 2 5/8 |
| 34,000 | 101C343U050BJ2B | 8.6 | 24.6 | 2 x 3 5/8 |
| 35,000 | 101C353U050EC2B | 10.5 | 21.6 | 1 3/4 x 4 1/8 |
| 40,000 | 101C403U050ED2B | 9.5 | 23.6 | 1 3/4 x 4 5/8 |
| 41,000 | 101C413U050BC2B | 7.2 | 28.2 | 2 x 4 1/8 |
| 44,000 | 101C443U050CB2B | 8.2 | 27.6 | 2 1/2 x 3 1/8 |
| 46,000 | 101C463U050EE2B | 8.8 | 25.4 | 1 3/4 x 5 1/8 |
| 48,000 | 101C483U050BD2B | 6.3 | 31.2 | 2 x 4 5/8 |
| 52,000 | 101C523U050EF2B | 8.4 | 27.0 | 1 3/4 x 5 5/8 |
| 55,000 | 101C553U050CJ2D | 6.6 | 32.2 | 2 1/2 x 3 5/8 |
| 55,000 | 101C553U050BE2B | 5.7 | 34.1 | 2 x 5 1/8 |
| 62,000 | 101C623U050BF2B | 5.2 | 36.8 | 2 x 5 5/8 |
| 65,000 | 101C653U050DB2B | 8.9 | 29.5 | 3 x 3 1/8 |
| 67,000 | 101C673U050CC2D | 5.4 | 37.3 | 2 1/2 x 4 1/8 |
| 79,000 | 101C793U050CD2D | 4.9 | 40.5 | 2 1/2 x 4 5/8 |
| 83,000 | 101C833U050DJ2D | 7.3 | 34.4 | 3 x 3 5/8 |
| 90,000 | 101C903U050CE2D | 4.4 | 44.3 | 2 1/2 x 5 1/8 |
| 100,000 | 101C104U050DC2D | 5.5 | 41.1 | 3 x 4 1/8 |
| 100,000 | 101C104U050CF2D | 4.0 | 47.9 | 2 1/2 x 5 5/8 |
| 120,000 | 101C124U050DD2D | 5.4 | 43.2 | 3 x 4 5/8 |
| 130,000 | 101C134U050DE2D | 4.8 | 47.2 | 3 x 5 1/8 |
| 150,000 | 101C154U050DF2D | 4.4 | 51.0 | 3 x 5 5/8 |
| 160,000 | 101C164U050DP2D | 4.2 | 52.9 | 3 x 5 7/8 |
| 220,000 | 101C224U050DN2D | 3.5 | 63.0 | 3 x 7 5/8 |
| 260,000 | 101C264U050DG2D | 3.1 | 69.0 | 3 x 8 5/8 |

# Type 101C –55 °C to 105 °C Low-ESR, Wide-Temperature Grade

| Cap. (µF) | Catalog Part Number | ESR Max @ 25 °C 120 Hz (mΩ) | Ripple Max @ 85 °C 120 Hz (A) | Nominal Size D x L (in) |
|---|---|---|---|---|
| **63 Vdc (85 Vdc Surge)** | | | | |
| 2,800 | 101C282U063AK2B | 57.9 | 4.9 | 1 3/8 x 1 5/8 |
| 5,000 | 101C502U063AA2B | 35.5 | 7.3 | 1 3/8 x 2 1/8 |
| 7,200 | 101C722U063AH2B | 25.8 | 9.8 | 1 3/8 x 2 5/8 |
| 8,800 | 101C882U063BA2B | 22.8 | 12.6 | 2 x 2 1/8 |
| 8,900 | 101C892U063EA2B | 28.0 | 10.4 | 1 3/4 x 2 1/8 |
| 9,400 | 101C942U063AB2B | 20.4 | 12.0 | 1 3/8 x 3 1/8 |
| 12,000 | 101C123U063AJ2B | 17.1 | 14.0 | 1 3/8 x 3 5/8 |
| 13,000 | 101C133U063EH2B | 20.4 | 13.2 | 1 3/4 x 2 5/8 |
| 14,000 | 101C143U063BH2B | 15.4 | 16.5 | 2 x 2 5/8 |
| 14,000 | 101C143U063AC2B | 14.8 | 15.8 | 1 3/8 x 4 1/8 |
| 16,000 | 101C163U063AD2B | 13.2 | 17.4 | 1 3/8 x 4 5/8 |
| 17,000 | 101C173U063EB2B | 16.1 | 15.8 | 1 3/4 x 3 1/8 |
| 18,000 | 101C183U063AE2B | 12.0 | 19.0 | 1 3/8 x 5 1/8 |
| 19,000 | 101C193U063BB2B | 10.2 | 21.5 | 2 x 3 1/8 |
| 20,000 | 101C203U063AF2B | 11.0 | 20.5 | 1 3/8 x 5 5/8 |
| 21,000 | 101C213U063EJ2B | 13.5 | 18.2 | 1 3/4 x 3 5/8 |
| 23,000 | 101C233U063CH2B | 11.3 | 22.1 | 2 1/2 x 2 5/8 |
| 24,000 | 101C243U063BJ2B | 9.6 | 23.4 | 2 x 3 5/8 |
| 25,000 | 101C253U063EC2B | 11.0 | 21.1 | 1 3/4 x 4 1/8 |
| 29,000 | 101C293U063ED2B | 10.0 | 23.0 | 1 3/4 x 4 5/8 |
| 29,000 | 101C293U063BC2B | 8.2 | 26.4 | 2 x 4 1/8 |
| 31,000 | 101C313U063CB2B | 8.6 | 26.9 | 2 1/2 x 3 1/8 |
| 33,000 | 101C333U063EE2B | 9.3 | 24.8 | 1 3/4 x 5 1/8 |
| 34,000 | 101C343U063BD2B | 7.2 | 29.3 | 2 x 4 5/8 |
| 37,000 | 101C373U063EF2B | 8.8 | 26.3 | 1 3/4 x 5 5/8 |
| 39,000 | 101C393U063BE2B | 6.5 | 32.0 | 2 x 5 1/8 |
| 40,000 | 101C403U063CJ2D | 7.0 | 31.4 | 2 1/2 x 3 5/8 |
| 44,000 | 101C443U063BF2B | 5.9 | 34.6 | 2 x 5 5/8 |
| 47,000 | 101C473U063DB2B | 9.3 | 29.0 | 3 x 3 1/8 |
| 48,000 | 101C483U063CC2D | 5.6 | 36.4 | 2 1/2 x 4 1/8 |
| 56,000 | 101C563U063CD2D | 5.2 | 39.5 | 2 1/2 x 4 5/8 |
| 59,000 | 101C593U063DJ2D | 7.5 | 33.8 | 3 x 3 5/8 |
| 65,000 | 101C653U063CE2D | 4.6 | 43.3 | 2 1/2 x 5 1/8 |
| 72,000 | 101C723U063DC2D | 6.0 | 39.5 | 3 x 4 1/8 |
| 73,000 | 101C733U063CF2D | 4.2 | 46.8 | 2 1/2 x 5 5/8 |
| 84,000 | 101C843U063DD2D | 5.6 | 42.5 | 3 x 4 5/8 |
| 97,000 | 101C973U063DE2D | 5.0 | 46.5 | 3 x 5 1/8 |
| 110,000 | 101C114U063DF2D | 4.5 | 50.2 | 3 x 5 5/8 |
| 120,000 | 101C124U063DP2D | 4.3 | 52.0 | 3 x 5 7/8 |
| 160,000 | 101C164U063DN2D | 3.6 | 62.2 | 3 x 7 5/8 |
| 180,000 | 101C184U063DG2D | 3.2 | 68.2 | 3 x 8 5/8 |

| Cap. (µF) | Catalog Part Number | ESR Max @ 25 °C 120 Hz (mΩ) | Ripple Max @ 85 °C 120 Hz (A) | Nominal Size D x L (in) |
|---|---|---|---|---|
| **75 Vdc (100 Vdc Surge)** | | | | |
| 2,100 | 101C212U075AK2B | 97.3 | 3.8 | 1 3/8 x 1 5/8 |
| 3,600 | 101C362U075AA2B | 67.2 | 5.3 | 1 3/8 x 2 1/8 |
| 5,200 | 101C522U075AH2B | 50.0 | 7.0 | 1 3/8 x 2 5/8 |
| 6,400 | 101C642U075BA2B | 40.7 | 9.4 | 2 x 2 1/8 |
| 6,500 | 101C652U075EA2B | 47.5 | 8.0 | 1 3/4 x 2 1/8 |
| 6,800 | 101C682U075AB2B | 39.3 | 8.7 | 1 3/8 x 3 1/8 |
| 8,400 | 101C842U075AJ2B | 32.5 | 10.1 | 1 3/8 x 3 5/8 |
| 9,400 | 101C942U075EH2B | 34.2 | 10.2 | 1 3/4 x 2 5/8 |
| 10,000 | 101C103U075AC2B | 27.9 | 11.5 | 1 3/8 x 4 1/8 |
| 10,000 | 101C103U075BH2B | 27.4 | 12.4 | 2 x 2 5/8 |
| 12,000 | 101C123U075EB2B | 27.0 | 12.2 | 1 3/4 x 3 1/8 |
| 12,000 | 101C123U075AD2B | 24.5 | 12.8 | 1 3/8 x 4 5/8 |
| 13,000 | 101C133U075AE2B | 22.0 | 14.0 | 1 3/8 x 5 1/8 |
| 14,000 | 101C143U075BB2B | 18.0 | 16.2 | 2 x 3 1/8 |
| 15,000 | 101C153U075EJ2B | 22.4 | 14.1 | 1 3/4 x 3 5/8 |
| 15,000 | 101C153U075AF2B | 20.0 | 15.2 | 1 3/8 x 5 5/8 |
| 17,000 | 101C173U075CH2B | 18.9 | 17.1 | 2 1/2 x 2 5/8 |
| 17,000 | 101C173U075BJ2B | 16.8 | 17.7 | 2 x 3 5/8 |
| 18,000 | 101C183U075EC2B | 18.0 | 16.5 | 1 3/4 x 4 1/8 |
| 21,000 | 101C213U075ED2B | 16.2 | 18.1 | 1 3/4 x 4 5/8 |
| 21,000 | 101C213U075BC2B | 12.7 | 21.2 | 2 x 4 1/8 |
| 23,000 | 101C233U075CB2B | 14.3 | 20.8 | 2 1/2 x 3 1/8 |
| 24,000 | 101C243U075EE2B | 14.8 | 19.6 | 1 3/4 x 5 1/8 |
| 25,000 | 101C253U075BD2B | 12.3 | 22.4 | 2 x 4 5/8 |
| 27,000 | 101C273U075EF2B | 13.9 | 20.9 | 1 3/4 x 5 5/8 |
| 28,000 | 101C283U075BE2B | 11.0 | 24.6 | 2 x 5 1/8 |
| 29,000 | 101C293U075CJ2B | 11.5 | 24.4 | 2 1/2 x 3 5/8 |
| 32,000 | 101C323U075BF2B | 9.9 | 26.7 | 2 x 5 5/8 |
| 34,000 | 101C343U075DB2B | 13.3 | 24.2 | 3 x 3 1/8 |
| 35,000 | 101C353U075CC2B | 8.7 | 29.4 | 2 1/2 x 4 1/8 |
| 41,000 | 101C413U075CD2D | 8.4 | 30.9 | 2 1/2 x 4 5/8 |
| 43,000 | 101C433U075DJ2B | 10.8 | 28.2 | 3 x 3 5/8 |
| 47,000 | 101C473U075CE2D | 7.5 | 34.0 | 2 1/2 x 5 1/8 |
| 52,000 | 101C523U075DC2D | 7.6 | 35.0 | 3 x 4 1/8 |
| 53,000 | 101C533U075CF2D | 6.7 | 36.9 | 2 1/2 x 5 5/8 |
| 61,000 | 101C613U075DD2D | 7.9 | 35.7 | 3 x 4 5/8 |
| 70,000 | 101C703U075DE2D | 6.1 | 42.0 | 3 x 5 1/8 |
| 79,000 | 101C793U075DF2D | 6.0 | 43.5 | 3 x 5 5/8 |
| 83,000 | 101C833U075DP2D | 5.7 | 45.1 | 3 x 5 7/8 |
| 110,000 | 101C114U075DN2D | 4.7 | 54.7 | 3 x 7 5/8 |
| 130,000 | 101C134U075DG2D | 4.1 | 60.3 | 3 x 8 5/8 |

# Type 101C –55 °C to 105 °C Low-ESR, Wide-Temperature Grade

| Cap. (µF) | Catalog Part Number | ESR Max @ 25 °C 120 Hz (mΩ) | Ripple Max @ 85 °C 120 Hz (A) | Nominal Size D x L (in) |
|---|---|---|---|---|
| **100 Vdc (150 Vdc Surge)** | | | | |
| 1,300 | 101C132U100AK2B | 115.6 | 3.5 | 1 3/8 x 1 5/8 |
| 2,300 | 101C232U100AA2B | 79.9 | 4.9 | 1 3/8 x 2 1/8 |
| 3,400 | 101C342U100AH2B | 59.4 | 6.4 | 1 3/8 x 2 5/8 |
| 4,100 | 101C412U100BA2B | 47.6 | 8.7 | 2 x 2 1/8 |
| 4,200 | 101C422U100EA2B | 55.0 | 7.4 | 1 3/4 x 2 1/8 |
| 4,400 | 101C442U100AB2B | 46.6 | 8.0 | 1 3/8 x 3 1/8 |
| 5,400 | 101C542U100AJ2B | 38.5 | 9.3 | 1 3/8 x 3 5/8 |
| 6,100 | 101C612U100EH2B | 39.6 | 9.5 | 1 3/4 x 2 5/8 |
| 6,500 | 101C652U100AC2B | 32.9 | 10.6 | 1 3/8 x 4 1/8 |
| 6,500 | 101C652U100BH2B | 32.0 | 11.4 | 2 x 2 5/8 |
| 7,500 | 101C752U100AD2B | 28.9 | 11.8 | 1 3/8 x 4 5/8 |
| 7,900 | 101C792U100EB2B | 31.1 | 11.4 | 1 3/4 x 3 1/8 |
| 8,500 | 101C852U100AE2B | 25.8 | 12.9 | 1 3/8 x 5 1/8 |
| 8,900 | 101C892U100BB2B | 21.0 | 15.0 | 2 x 3 1/8 |
| 9,600 | 101C962U100AF2B | 23.4 | 14.1 | 1 3/8 x 5 5/8 |
| 9,800 | 101C982U100EJ2B | 25.8 | 13.2 | 1 3/4 x 3 5/8 |
| 11,000 | 101C113U100CH2B | 20.7 | 16.3 | 2 1/2 x 2 5/8 |
| 11,000 | 101C113U100BJ2B | 19.5 | 16.4 | 2 x 3 5/8 |
| 12,000 | 101C123U100EC2B | 20.7 | 15.4 | 1 3/4 x 4 1/8 |
| 14,000 | 101C143U100ED2B | 18.6 | 16.9 | 1 3/4 x 4 5/8 |
| 14,000 | 101C143U100BC2B | 14.8 | 19.7 | 2 x 4 1/8 |
| 15,000 | 101C153U100EE2B | 17.0 | 18.3 | 1 3/4 x 5 1/8 |
| 15,000 | 101C153U100CB2B | 16.5 | 19.4 | 2 1/2 x 3 1/8 |
| 16,000 | 101C163U100BD2B | 14.3 | 20.8 | 2 x 4 5/8 |
| 17,000 | 101C173U100EF2B | 15.9 | 19.6 | 1 3/4 x 5 5/8 |
| 18,000 | 101C183U100BE2B | 12.7 | 22.9 | 2 x 5 1/8 |
| 19,000 | 101C193U100CJ2B | 13.3 | 22.7 | 2 1/2 x 3 5/8 |
| 21,000 | 101C213U100BF2B | 11.4 | 24.9 | 2 x 5 5/8 |
| 22,000 | 101C223U100DB2B | 13.8 | 23.8 | 3 x 3 1/8 |
| 22,000 | 101C223U100CC2B | 10.0 | 27.4 | 2 1/2 x 4 1/8 |
| 26,000 | 101C263U100CD2B | 9.7 | 28.9 | 2 1/2 x 4 5/8 |
| 28,000 | 101C283U100DJ2B | 11.2 | 27.7 | 3 x 3 5/8 |
| 30,000 | 101C303U100CE2D | 8.6 | 31.7 | 2 1/2 x 5 1/8 |
| 34,000 | 101C343U100DC2D | 8.5 | 33.2 | 3 x 4 1/8 |
| 34,000 | 101C343U100CF2D | 7.7 | 34.5 | 2 1/2 x 5 5/8 |
| 39,000 | 101C393U100DD2D | 7.9 | 35.7 | 3 x 4 5/8 |
| 45,000 | 101C453U100DE2D | 6.5 | 40.5 | 3 x 5 1/8 |
| 51,000 | 101C513U100DF2D | 6.0 | 43.5 | 3 x 5 5/8 |
| 54,000 | 101C543U100DP2D | 6.0 | 44.1 | 3 x 5 7/8 |
| 74,000 | 101C743U100DN2D | 4.8 | 54.0 | 3 x 7 5/8 |
| 85,000 | 101C853U100DG2D | 4.2 | 59.2 | 3 x 8 5/8 |

| Cap. (µF) | Catalog Part Number | ESR Max @ 25 °C 120 Hz (mΩ) | Ripple Max @ 85 °C 120 Hz (A) | Nominal Size D x L (in) |
|---|---|---|---|---|
| **150 Vdc (200 Vdc Surge)** | | | | |
| 490 | 101C491U150AK2B | 433.1 | 2.1 | 1 3/8 x 1 5/8 |
| 880 | 101C881U150AA2B | 241.1 | 3.1 | 1 3/8 x 2 1/8 |
| 1,200 | 101C122U150EA2B | 198.9 | 3.9 | 1 3/4 x 2 1/8 |
| 1,300 | 101C132U150AH2B | 163.2 | 4.0 | 1 3/8 x 2 5/8 |
| 1,500 | 101C152U150BA2B | 159.2 | 4.8 | 2 x 2 1/8 |
| 1,700 | 101C172U150AB2B | 124.8 | 4.9 | 1 3/8 x 3 1/8 |
| 1,800 | 101C182U150EH2B | 132.6 | 5.2 | 1 3/4 x 2 5/8 |
| 1,900 | 101C192U150AJ2B | 111.7 | 5.5 | 1 3/8 x 3 5/8 |
| 2,300 | 101C232U150BH2B | 103.8 | 6.3 | 2 x 2 5/8 |
| 2,500 | 101C252U150EB2B | 95.5 | 6.5 | 1 3/4 x 3 1/8 |
| 2,500 | 101C252U150AC2B | 84.9 | 6.6 | 1 3/8 x 4 1/8 |
| 2,700 | 101C272U150AD2B | 80.1 | 7.1 | 1 3/8 x 4 5/8 |
| 3,100 | 101C312U150AE2B | 74.0 | 7.6 | 1 3/8 x 5 1/8 |
| 3,200 | 101C322U150EJ2B | 74.6 | 7.7 | 1 3/4 x 3 5/8 |
| 3,400 | 101C342U150BB2B | 54.6 | 9.3 | 2 x 3 1/8 |
| 3,600 | 101C362U150AF2B | 66.3 | 8.4 | 1 3/8 x 5 5/8 |
| 3,800 | 101C382U150CH2B | 62.8 | 9.4 | 2 1/2 x 2 5/8 |
| 4,000 | 101C402U150BJ2B | 59.7 | 9.4 | 2 x 3 5/8 |
| 4,400 | 101C442U150EC2B | 54.3 | 9.5 | 1 3/4 x 4 1/8 |
| 4,500 | 101C452U150ED2B | 53.1 | 10.0 | 1 3/4 x 4 5/8 |
| 5,200 | 101C522U150EE2B | 45.9 | 11.1 | 1 3/4 x 5 1/8 |
| 5,200 | 101C522U150CB2B | 45.9 | 11.6 | 2 1/2 x 3 1/8 |
| 5,200 | 101C522U150BC2B | 45.0 | 11.3 | 2 x 4 1/8 |
| 5,700 | 101C572U150BD2B | 41.9 | 12.2 | 2 x 4 5/8 |
| 5,800 | 101C582U150EF2B | 41.2 | 12.2 | 1 3/4 x 5 5/8 |
| 6,600 | 101C662U150BE2B | 36.2 | 13.6 | 2 x 5 1/8 |
| 6,600 | 101C662U150CJ2B | 36.2 | 13.8 | 2 1/2 x 3 5/8 |
| 7,800 | 101C782U150DB2B | 35.7 | 14.8 | 3 x 3 1/8 |
| 7,900 | 101C792U150BF2B | 30.2 | 15.3 | 2 x 5 5/8 |
| 8,500 | 101C852U150CC2B | 28.1 | 16.3 | 2 1/2 x 4 1/8 |
| 9,400 | 101C942U150CD2B | 25.4 | 17.8 | 2 1/2 x 4 5/8 |
| 9,900 | 101C992U150DJ2B | 28.1 | 17.5 | 3 x 3 5/8 |
| 11,000 | 101C113U150CE2B | 21.7 | 19.9 | 2 1/2 x 5 1/8 |
| 12,000 | 101C123U150DC2B | 23.2 | 20.1 | 3 x 4 1/8 |
| 13,000 | 101C133U150CF2B | 18.4 | 22.3 | 2 1/2 x 5 5/8 |
| 14,000 | 101C143U150DD2B | 19.9 | 22.5 | 3 x 4 5/8 |
| 16,000 | 101C163U150DE2B | 17.4 | 24.8 | 3 x 5 1/8 |
| 18,000 | 101C183U150DF2B | 15.5 | 27.1 | 3 x 5 5/8 |
| 19,000 | 101C193U150DP2B | 14.7 | 28.2 | 3 x 5 7/8 |
| 26,000 | 101C263U150DN2D | 11.3 | 35.7 | 3 x 7 5/8 |
| 30,000 | 101C303U150DG2D | 9.3 | 40.0 | 3 x 8 5/8 |

# Type 101C –55 °C to 105 °C Low-ESR, Wide-Temperature Grade

| Cap. (µF) | Catalog Part Number | ESR Max @ 25 °C 120 Hz (mΩ) | Ripple Max @ 85 °C 120 Hz (A) | Nominal Size D x L (in) |
|---|---|---|---|---|
| **200 Vdc (275 Vdc Surge)** | | | | |
| 380 | 101C381T200AK2B | 453.7 | 2.0 | 1 3/8 x 1 5/8 |
| 680 | 101C681T200AA2B | 253.5 | 3.0 | 1 3/8 x 2 1/8 |
| 890 | 101C891T200EA2B | 223.5 | 3.7 | 1 3/4 x 2 1/8 |
| 980 | 101C981T200AH2B | 175.9 | 3.9 | 1 3/8 x 2 5/8 |
| 1,100 | 101C112T200BA2B | 180.9 | 4.5 | 2 x 2 1/8 |
| 1,300 | 101C132T200AB2B | 132.6 | 4.8 | 1 3/8 x 3 1/8 |
| 1,400 | 101C142T200EH2B | 142.1 | 5.0 | 1 3/4 x 2 5/8 |
| 1,600 | 101C162T200AJ2B | 107.8 | 5.6 | 1 3/8 x 3 5/8 |
| 1,800 | 101C182T200BH2B | 110.5 | 6.1 | 2 x 2 5/8 |
| 1,900 | 101C192T200EB2B | 104.7 | 6.2 | 1 3/4 x 3 1/8 |
| 1,900 | 101C192T200AC2B | 88.9 | 6.4 | 1 3/8 x 4 1/8 |
| 2,200 | 101C222T200AD2B | 90.4 | 6.7 | 1 3/8 x 4 5/8 |
| 2,400 | 101C242T200EJ2B | 82.9 | 7.3 | 1 3/4 x 3 5/8 |
| 2,400 | 101C242T200BB2B | 82.9 | 7.5 | 2 x 3 1/8 |
| 2,500 | 101C252T200AE2B | 79.6 | 7.4 | 1 3/8 x 5 1/8 |
| 2,800 | 101C282T200AF2B | 71.0 | 8.1 | 1 3/8 x 5 5/8 |
| 3,100 | 101C312T200BJ2B | 64.2 | 9.0 | 2 x 3 5/8 |
| 3,400 | 101C342T200EC2B | 58.5 | 9.1 | 1 3/4 x 4 1/8 |
| 3,500 | 101C352T200ED2B | 56.8 | 9.7 | 1 3/4 x 4 5/8 |
| 4,000 | 101C402T200EE2B | 49.7 | 10.7 | 1 3/4 x 5 1/8 |
| 4,000 | 101C402T200CB2B | 49.7 | 11.2 | 2 1/2 x 3 1/8 |
| 4,000 | 101C402T200BC2B | 43.1 | 11.5 | 2 x 4 1/8 |
| 4,400 | 101C442T200BD2B | 45.2 | 11.7 | 2 x 4 5/8 |
| 4,500 | 101C452T200EF2B | 44.2 | 11.7 | 1 3/4 x 5 5/8 |
| 5,000 | 101C502T200BE2B | 39.8 | 12.9 | 2 x 5 1/8 |
| 5,100 | 101C512T200CJ2B | 39.0 | 13.3 | 2 1/2 x 3 5/8 |
| 6,100 | 101C612T200BF2B | 32.6 | 14.7 | 2 x 5 5/8 |
| 6,500 | 101C652T200CC2B | 26.3 | 16.9 | 2 1/2 x 4 1/8 |
| 7,200 | 101C722T200CH2B | 27.6 | 14.1 | 2 1/2 x 2 5/8 |
| 7,200 | 101C722T200CD2B | 27.6 | 17.1 | 2 1/2 x 4 5/8 |
| 7,600 | 101C762T200DJ2B | 29.7 | 17.0 | 3 x 3 5/8 |
| 8,300 | 101C832T200CE2B | 24.0 | 19.0 | 2 1/2 x 5 1/8 |
| 9,300 | 101C932T200DC2B | 21.4 | 20.9 | 3 x 4 1/8 |
| 10,000 | 101C103T200CF2B | 21.2 | 20.8 | 2 1/2 x 5 5/8 |
| 11,000 | 101C113T200DD2B | 20.5 | 22.1 | 3 x 4 5/8 |
| 13,000 | 101C133T200DB2B | 17.8 | 20.9 | 3 x 3 1/8 |
| 13,000 | 101C133T200DE2B | 17.8 | 24.5 | 3 x 5 1/8 |
| 14,000 | 101C143T200DF2B | 16.9 | 25.9 | 3 x 5 5/8 |
| 15,000 | 101C153T200DP2B | 15.9 | 27.1 | 3 x 5 7/8 |
| 20,000 | 101C203T200DN2D | 12.5 | 33.9 | 3 x 7 5/8 |
| 23,000 | 101C233T200DG2D | 10.4 | 37.8 | 3 x 8 5/8 |

| Cap. (µF) | Catalog Part Number | ESR Max @ 25 °C 120 Hz (mΩ) | Ripple Max @ 85 °C 120 Hz (A) | Nominal Size D x L (in) |
|---|---|---|---|---|
| **250 Vdc (350 Vdc Surge)** | | | | |
| 290 | 101C291T250AK2B | 548.8 | 1.8 | 1 3/8 x 1 5/8 |
| 530 | 101C531T250AA2B | 300.3 | 2.7 | 1 3/8 x 2 1/8 |
| 700 | 101C701T250EA2B | 227.4 | 3.7 | 1 3/4 x 2 1/8 |
| 760 | 101C761T250AH2B | 209.4 | 3.5 | 1 3/8 x 2 5/8 |
| 890 | 101C891T250BA2B | 163.9 | 4.7 | 2 x 2 1/8 |
| 990 | 101C991T250AB2B | 160.8 | 4.3 | 1 3/8 x 3 1/8 |
| 1,100 | 101C112T250EH2B | 144.7 | 5.0 | 1 3/4 x 2 5/8 |
| 1,200 | 101C122T250AJ2B | 132.6 | 5.0 | 1 3/8 x 3 5/8 |
| 1,400 | 101C142T250BH2B | 104.2 | 6.3 | 2 x 2 5/8 |
| 1,500 | 101C152T250AC2B | 106.1 | 5.9 | 1 3/8 x 4 1/8 |
| 1,500 | 101C152T250EB2B | 106.1 | 6.2 | 1 3/4 x 3 1/8 |
| 1,700 | 101C172T250AD2B | 101.4 | 6.3 | 1 3/8 x 4 5/8 |
| 1,900 | 101C192T250AE2B | 90.7 | 6.9 | 1 3/8 x 5 1/8 |
| 1,900 | 101C192T250EJ2B | 83.8 | 7.3 | 1 3/4 x 3 5/8 |
| 1,900 | 101C192T250BB2B | 69.8 | 8.2 | 2 x 3 1/8 |
| 2,200 | 101C222T250AF2B | 84.4 | 7.4 | 1 3/8 x 5 5/8 |
| 2,300 | 101C232T250CH2B | 75.0 | 8.6 | 2 1/2 x 2 5/8 |
| 2,300 | 101C232T250EC2B | 69.2 | 8.4 | 1 3/4 x 4 1/8 |
| 2,400 | 101C242T250BJ2B | 58.0 | 9.5 | 2 x 3 5/8 |
| 2,700 | 101C272T250ED2B | 58.9 | 9.5 | 1 3/4 x 4 5/8 |
| 2,900 | 101C292T250BC2B | 50.3 | 10.7 | 2 x 4 1/8 |
| 3,100 | 101C312T250CB2B | 55.6 | 10.6 | 2 1/2 x 3 1/8 |
| 3,100 | 101C312T250EE2B | 51.3 | 10.5 | 1 3/4 x 5 1/8 |
| 3,400 | 101C342T250BD2B | 45.6 | 11.7 | 2 x 4 5/8 |
| 3,500 | 101C352T250EF2B | 45.5 | 11.6 | 1 3/4 x 5 5/8 |
| 3,900 | 101C392T250BE2B | 42.0 | 12.6 | 2 x 5 1/8 |
| 4,000 | 101C402T250CJ2B | 43.1 | 12.6 | 2 1/2 x 3 5/8 |
| 4,500 | 101C452T250BF2B | 38.3 | 13.6 | 2 x 5 5/8 |
| 4,700 | 101C472T250DB2B | 42.3 | 13.6 | 3 x 3 1/8 |
| 5,100 | 101C512T250CC2B | 30.6 | 15.6 | 2 1/2 x 4 1/8 |
| 5,700 | 101C572T250CD2B | 28.9 | 16.7 | 2 1/2 x 4 5/8 |
| 5,900 | 101C592T250DJ2B | 33.7 | 16.0 | 3 x 3 5/8 |
| 6,500 | 101C652T250CE2B | 26.6 | 18.0 | 2 1/2 x 5 1/8 |
| 7,200 | 101C722T250DC2B | 27.6 | 18.4 | 3 x 4 1/8 |
| 7,700 | 101C772T250CF2B | 24.1 | 19.5 | 2 1/2 x 5 5/8 |
| 8,500 | 101C852T250DD2B | 23.4 | 20.7 | 3 x 4 5/8 |
| 9,700 | 101C972T250DE2B | 20.5 | 22.8 | 3 x 5 1/8 |
| 11,000 | 101C113T250DF2B | 18.1 | 25.0 | 3 x 5 5/8 |
| 12,000 | 101C123T250DP2B | 16.6 | 26.5 | 3 x 5 7/8 |
| 16,000 | 101C163T250DN2D | 13.4 | 32.8 | 3 x 7 5/8 |
| 18,000 | 101C183T250DG2D | 11.1 | 36.7 | 3 x 8 5/8 |

# Type 101C –55 °C to 105 °C Low-ESR, Wide-Temperature Grade

## Typical Performance Curves

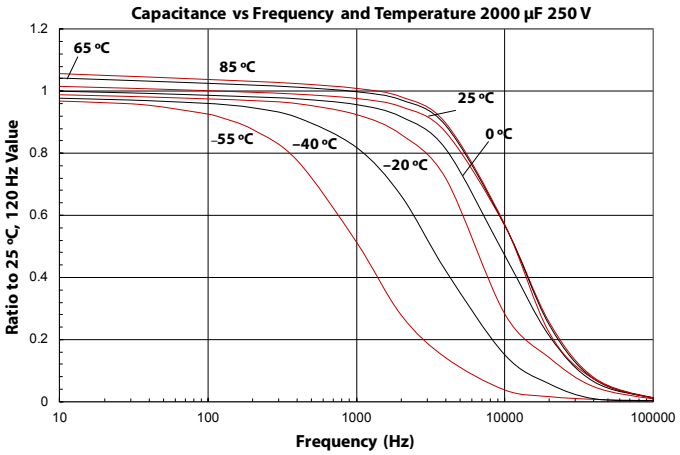


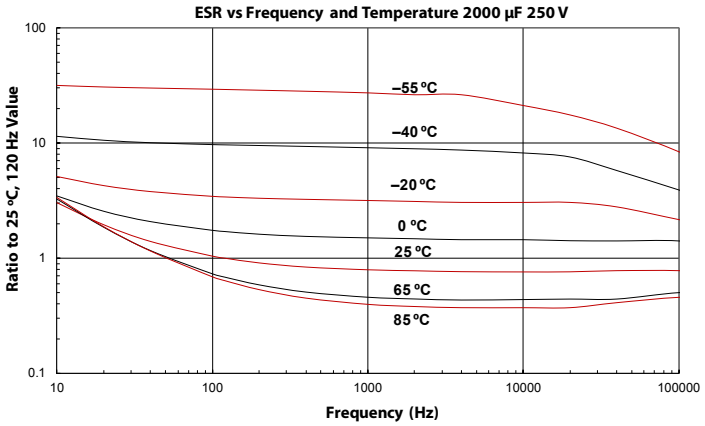


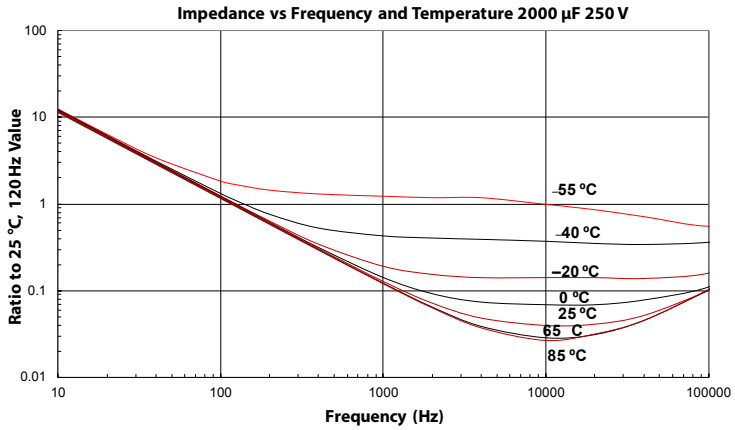


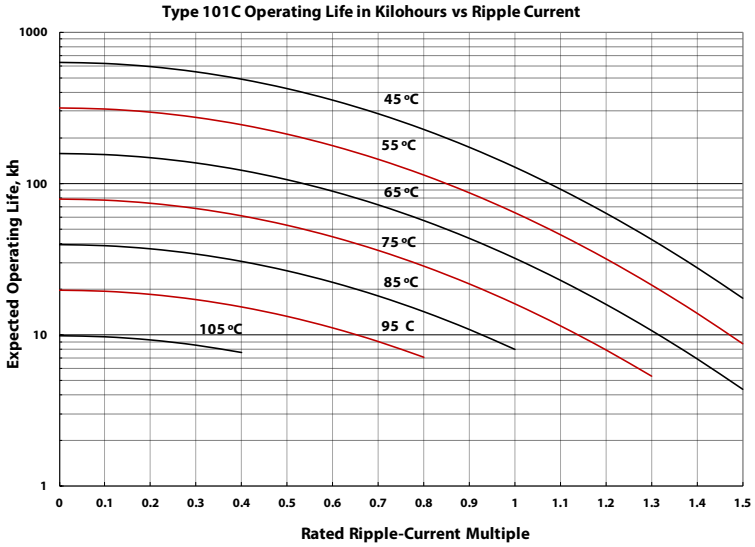

**Notice and Disclaimer:** All product drawings, descriptions, specifications, statements, information and data (collectively, the "Information") in this datasheet or other publication are subject to change. The customer is responsible for checking, confirming and verifying the extent to which the Information contained in this datasheet or other publication is applicable to an order at the time the order is placed. All Information given herein is believed to be accurate and reliable, but it is presented without any guarantee, warranty, representation or responsibility of any kind, expressed or implied. Statements of suitability for certain applications are based on the knowledge that the Cornell Dubilier company providing such statements ("Cornell Dubilier") has of operating conditions that such Cornell Dubilier company regards as typical for such applications, but are not intended to constitute any guarantee, warranty or representation regarding any such matter – and Cornell Dubilier specifically and expressly disclaims any guarantee, warranty or representation concerning the suitability for a specific customer application, use, storage, transportation, or operating environment. The Information is intended for use only by customers who have the requisite experience and capability to determine the correct products for their application. Any technical advice inferred from this Information or otherwise provided by Cornell Dubilier with reference to the use of any Cornell Dubilier products is given gratis (unless otherwise specified by Cornell Dubilier), and Cornell Dubilier assumes no obligation or liability for the advice given or results obtained. Although Cornell Dubilier strives to apply the most stringent quality and safety standards regarding the design and manufacturing of its products, in light of the current state of the art, isolated component failures may still occur. Accordingly, customer applications which require a high degree of reliability or safety should employ suitable designs or other safeguards (such as installation of protective circuitry or redundancies or other appropriate protective measures) in order to ensure that the failure of an electrical component does not result in a risk of personal injury or property damage. Although all product-related warnings, cautions and notes must be observed, the customer should not assume that all safety measures are indicated in such warnings, cautions and notes, or that other safety measures may not be required.

# OCEAN CHIPS
## Океан Электроники
### Поставка электронных компонентов

Компания «Океан Электроники» предлагает заключение долгосрочных отношений при поставках импортных электронных компонентов на взаимовыгодных условиях!

Наши преимущества:

- Поставка оригинальных импортных электронных компонентов напрямую с производств Америки, Европы и Азии, а так же с крупнейших складов мира;
- Широкая линейка поставок активных и пассивных импортных электронных компонентов (более 30 млн. наименований);
- Поставка сложных, дефицитных, либо снятых с производства позиций;
- Оперативные сроки поставки под заказ (от 5 рабочих дней);
- Экспресс доставка в любую точку России;
- Помощь Конструкторского Отдела и консультации квалифицированных инженеров;
- Техническая поддержка проекта, помощь в подборе аналогов, поставка прототипов;
- Поставка электронных компонентов под контролем ВП;
- Система менеджмента качества сертифицирована по Международному стандарту ISO 9001;
- При необходимости вся продукция военного и аэрокосмического назначения проходит испытания и сертификацию в лаборатории (по согласованию с заказчиком);
- Поставка специализированных компонентов военного и аэрокосмического уровня качества (Xilinx, Altera, Analog Devices, Intersil, Interpoint, Microsemi, Actel, Aeroflex, Peregrine, VPT, Syfer, Eurofarad, Texas Instruments, MS Kennedy, Miteq, Cobham, E2V, MA-COM, Hittite, Mini-Circuits, General Dynamics и др.);

Компания «Океан Электроники» является официальным дистрибьютором и эксклюзивным представителем в России одного из крупнейших производителей разъемов военного и аэрокосмического назначения **«JONHON»**, а так же официальным дистрибьютором и эксклюзивным представителем в России производителя высокотехнологичных и надежных решений для передачи СВЧ сигналов **«FORSTAR»**.

AVIC JONHON

**«JONHON»** (основан в 1970 г.)

Разъемы специального, военного и аэрокосмического назначения:

(Применяются в военной, авиационной, аэрокосмической, морской, железнодорожной, горно- и нефтедобывающей отраслях промышленности)

**«FORSTAR»** (основан в 1998 г.)

ВЧ соединители, коаксиальные кабели, кабельные сборки и микроволновые компоненты:

(Применяются в телекоммуникациях гражданского и специального назначения, в средствах связи, РЛС, а так же военной, авиационной и аэрокосмической отраслях промышленности).

FORSTAR®

Телефон: 8 (812) 309-75-97 (многоканальный)
Факс: 8 (812) 320-03-32
Электронная почта: ocean@oceanchips.ru
Web: http://oceanchips.ru/
Адрес: 198099, г. Санкт-Петербург, ул. Калинина, д. 2, корп. 4, лит. А