Interactive Catalog Supplements Catalog PDFs

If you need detailed product information, or help choosing the right product for your application, see our Interactive Catalog. Use the Interactive Catalog to access the most complete and up-to-date information available.

The Interactive Catalog provides an extensive collection of product specifications, application data, and technical literature that can be searched based on criteria you select.

This PDF catalog information was published in November 2000.

CHECK THIS OUT!

Sensing and Control
Interactive
Catalog...

Click this icon to try the Interactive Catalog.

Sensing and Control
Honeywell Inc.
11 West Spring Street
Freeport, IL 61032

Limit and Enclosed Switches

Rotary Actuated Switches

Side Rotary

Top Rotary

Order guides below and on page A35 provide specification and pricing information for side and top rotary switches.

Plug-in body style catalog listings consist of the complete plug-in base receptacle.

Levers are ordered separately. See pages A37-A39 for lever selection.

For rapid response – off the shelf service, all **bold face** listings are normally stocked items.

For low temperature, high temperature or preleading see page A42.

ASSEMBLED CONDITIONS

Catalog listings in order guide below are factory assembled with:

- Shaft of side rotary heads facing front of switch (label side).
- Head adjusted for both clockwise and counterclockwise operation.
- Light on indicator versions wired to N.O. circuit.

Refer to facing page to specify modifications to these assembled conditions.

PRELEADED OR CONNECTORIZED VERSIONS

Refer to page A42.

Limit/Enclosed

ORDER GUIDE (Momentary action. UL listed, CSA certified, CE approved. Levers not included. Order separately pages A37-A39.)

Circuitry	Electrical Rating	Body** Style	Catalog Listings Side Rotary: Standard	Low Differential	5° Pretravel	Low Torque	Low Differential Low Torque	Top Rotary: High Overtravel
Silver contacts	A	Plug-in ½″ Conduit	**LSA1A**	**LSP1A**	LSU1A	**LSR1A**	**LSH1A**	**LSB1A**
Gold cross point contacts	C	Plug-in ½″ Conduit	**LSA1J**		LSU1J	—	—	LSB1J
Gold plated contacts	C		LSA1E	LSP1E	—	LSR1E	LSH1E	—
Silver contacts	A*	120 V Ind. lite Plug-In* ½″ Conduit	**LSA5A**	**LSP5A**	LSU5A	LSR5A	**LSH5A**	LSB5A
	A*	240 V Ind. lite Plug-In ½″ Conduit	LSA8A	LSP8A	LSU8A	LSR8A	LSH8A	LSB8A
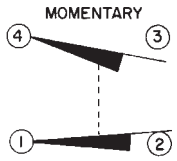	A*	24 V LED lite 1.5mA max. Auto polarity Plug-in ½″ Conduit	LSA9A	LSP9A	LSU9A	LSR9A	LSH9A	LSB9A
SPDT Double Break	A	Non plug-in ½″ Conduit	**LSA3K**	**LSP3K**	LSU3K	**LSR3K**	**LSH3K**	**LSB3K**
Silver contacts	B	Plug-in ¾″ Conduit	**LSA2B**	**LSP2B**	LSU2B	LSR2B	**LSH2B**	**LSB2B**
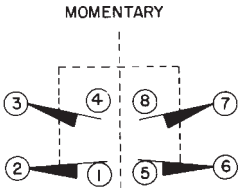	B	Plug-in ½″ Conduit	LSA6B	LSP6B	LSU6B	LSR6B	LSH6B	LSB6B
	B	120 V Ind. lite Plug-in ¾″ Conduit	LSA2R	LSP2R	LSU2R	LSR2R	LSH2R	LSB2R
	B	Non plug-in ¾″ Conduit	**LSA4L**	**LSP4L**	LSU4L	LSR4L	LSH4L	LSB4L
DPDT Double Break	B	Non plug-in ½″ Conduit	LSA7L	LSP7L	LSU7L	LSR7L	LSH7L	LSB7L
SPNC Direct Acting	D	Non plug-in ½″ Conduit	LSA3N			LSR3N		LSB3N

*Use at voltage indicated for light. Wired to N.O. circuit. Upper temperature limit for lighted units is 200°F (93°C). **Plug-in listings include base receptacle.

OPERATING CHARACTERISTICS

Pretravel (degrees max.)		15	9	5	15	9	25
Differential Travel (degrees max.)	SPDT	5	3	3	5	3	10
	DPDT	7	4	4	7	4	12
Overtravel (degrees min.)		60	66	70	60	66	110
Operating Torque (max.)	NM = Newton meters	0,45 Nm 4 in. lbs.	0,45 Nm 4 in. lbs.	0,45 Nm 4 in. lbs.	0,19 Nm 1.7 in. lbs.	0,19 Nm 1.7 in. lbs.	0,28 Nm 2.5 in. lbs.
Operating Temperature Range***		10°F to 250°F −12° to 121°C			30°F to 250°F −1° to 121°C		

***Completely fluorocarbon-sealed switches are preferred for use in temperatures above 200°F (93°C). Refer to page A42.

Rotary Actuated Switches

ACTUATION DIRECTION

(Drawings apply to listings on facing page only).

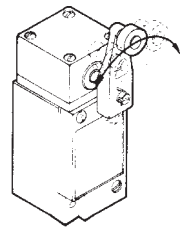

CW & CCW (Normal)

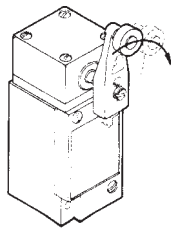

CW Mod. 1

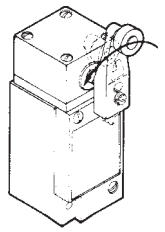

CCW Mod. 2

HEAD ORIENTATION

Mod. 5

Mod. 3

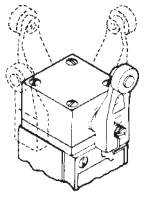

Mod. 4

Front (Normal)

ASSEMBLY MODIFICATIONS

How to order

Momentary action rotary switches can be furnished in other than the normal assembled conditions described on the facing page. To specify modifications, add the number(s) shown below to the catalog listings. Prices are the same as their counterparts shown in the order guide.

Modification number suffixes are:

- **1** Clockwise operation only
- **2** Counterclockwise operation only
- **3** Shaft to right of switch front
- **4** Shaft to left of switch front
- **5** Shaft to back of switch
- **7** Indicator light wired to N.C. circuit

Examples:

Catalog Listing LSA1A**23** is an LSA1A switch adjusted for counterclockwise operation only. The operating shaft is to the right side of the switch when viewing it from the front (label side). No lever.

Catalog Listing LSA8A**7** is an LSA8A switch with the 240 volt indicator light wired to the N.C. circuit. No lever.

Switches with assembly modifications are not normally stocked and may extend delivery leadtimes.

LEVERS

Levers for rotary actuated switches are normally ordered as separate catalog listings. They also may be ordered by including a suffix to the switch catalog listing and adding the lever price. See pages A34-A39.

SWITCHES FOR SPECIAL APPLICATIONS

HDLS limit switches for special application needs are described on pages A42 and A43. They include: manifold mount, low temperature, complete fluorocarbon-sealed, gravity return, extra low torque and 20 Amp switches.

Adapter plates for interchanging HDLS with LS/200LS limit switches are described on page A49.

ELECTRICAL RATINGS

10 amps continuous carry (except for electrical rating ‘‘C’’). Circuits on any one pole must be the same polarity.

AC Volts

Pilot duty: 600 VAC, 720VA

Electical Rating	Circuitry	VAC	Amps at 0.35 Power Factor Make	Break
A*	Single-Pole Double-Throw	120 240 480 600	60 30 15 12	6 3 1.5 1.2
B	Double-Pole Double-Throw	120 240 480 600	30 15 7.5 6	3 1.5 0.75 0.60
D	Single-Pole Single-Throw Normally Closed	120 240 480 600	60 30 15 12	6 3 1.5 1.2
C**	Single-Pole Double-Throw	250 VAC or 60 VDC, .050 amp max.		

DC Volts

Pilot duty: 240 VDC, 30 watts

Electrical Rating	Circuitry	VDC	Make and Break Amps Inductive	Resistive
A*	Single-Pole Double-Throw	120 240	0.25 0.15	0.8 0.4
B	Double-Pole Double-Throw	120 240	0.25 0.15	0.8 0.4
D	Single-Pole Single-Throw Normally Closed	30 120	4.3 1.1	4.3 1.1
C**	Single-Pole Double-Throw	250 VAC or 60 VDC, .050 amp max.		

*For switches with indicator light, use only at voltage stated for indicator light.

**These switches have either gold plated or gold cross point contacts. Cross point contacts improve high reliability of contact make when particle contamination is a problem or low energy loads must be carried.

Rotary Actuated Switches

ADDITIONAL CIRCUITRY/ACTION OPTIONS

ASSEMBLY MODIFICATIONS

Switches in the order guide, below, have the operating shaft facing front. If another orientation is desired, add a number from the drawing to the catalog listing.

To specify the indicator light wired to the N.C. circuit, add **7** to the catalog listing.

Example:
Catalog Listing LSN5A**37** is an LSN5A switch with the shaft facing right and the indicator light wired to the N.C. circuit.

HEAD ORIENTATION

(Drawing applies to this page only.)

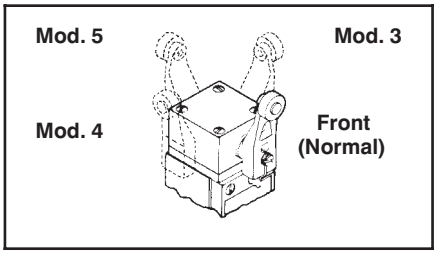

Lever ordering information is shown on pages A36-A39.

ORDER GUIDE

Maintained, center neutral, or sequential action. UL listed, CSA certified. Levers not included (see pages A36-A39).

For low temperature, all Viton or preleaded versions see page A42.

Circuitry	Elec. Rating Page A23	Body** Style	Maintained† 360° Alternate Action	Maintained† 2 Position Standard	Center Neutral (Pole 1 operates CCW Pole 2 operates CW)	Sequential (Pole 1 operates before Pole 2, either CW or CCW or both)
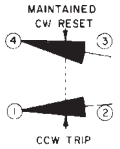 SPDT Double Break Maintained	A	Plug-in ½″ Conduit	LSQ300	**LSN1A**	CENTER NEUTRAL (Momentary) 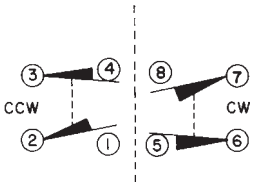 SPDT Double Break each direction Electrical rating B	SEQUENCE (Momentary) 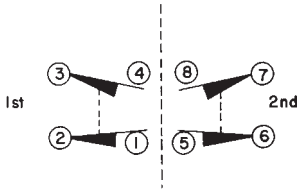 (2) SPDT Double Break with 10° between operation Electrical rating B
	A*	120V Ind. Lite Plug-in ½″ Conduit		**LSN5A**		
	A*	240V Ind. Lite Plug-in ½″ Conduit		LSN8A		
	A	Non plug-in ½″ Conduit	LSQ310	**LSN3K**		
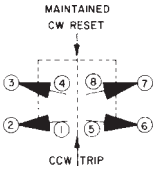 DPDT Double Break Maintained	B	Plug-in ¾″ Conduit		**LSN2B**	**LSM2D**	**LSL2C**
	B	Plug-in ½″ Conduit		LSN6B	LSM6D	LSL6C
	B	Non plug-in ¾″ Conduit	LSQ320	LSN4L	**LSM4N**	**LSL4M**
	B	Non plug-in ½″ Conduit		LSN7L	**LSM7N**	**LSL7M**
SP Normally Closed Direct Acting	D	Non plug-in ½″ Conduit		LSN3N		

* Use at voltage indicated for light. Wired to N.O. circuit.
Upper temperature for lighted units is 200°F (93°C).

** Plug-in listings include base receptacle.

† Total travel is approximately 80° max. Maintained contact switch normally used with LSZ53 yoke actuator.

OPERATING CHARACTERISTICS

Pretravel (degrees max.)	SPDT	65	Not Applicable	Not Applicable
Note: Mechanical trip before electrical trip	DPDT	65	18	1st Pole 15 2nd Pole 10 additional (max.)
Differential Travel (degrees max.)	SPDT	40	Not Applicable	Not Applicable
	DPDT	40	10	For each pole — 5 degrees
Overtravel (degrees min.)		20	57	48
Operating Torque (max.) Nm = Newton meters		0,45 Nm 4 in. lbs.	0,45 4 in. lbs.	0,45 4 in. lbs.
Operating Temperature Range***		30°F to 250°F –1 to 121°C		10°F to 250°F –12 to 121°C

*** Completely fluorocarbon-sealed switches are preferred for temperatures above 200°F (93°C). Refer to page A42.

Limit and Enclosed Switches

Levers for Rotary Actuated Switches

Levers for use with side or top rotary actuated switches are available in a wide choice of sizes and materials, as shown in the order guides on the following pages. Rollers may be on either side of the lever to best match the external actuating mechanism. They permit a wide range of cam tracking possibilities (see drawings below).

LSZ51 standard rollers and **LSZ55** offset roller levers have a fixed 1.5 inch (38,1 mm) radius.

LSZ53 yoke roller levers are used with side rotary maintained switches, where a reciprocating actuator operates the switch in one direction and reverses it when moving in the other direction.

LSZ52 adjustable length roller levers are universally adaptable to many application needs.

LSZ54 rod levers may be formed by the user. The hub permits adjusting of lever length. Also available in flexible versions.

LSZ61 is an adjustable loop lever.

For lever order guides, refer to the following pages.

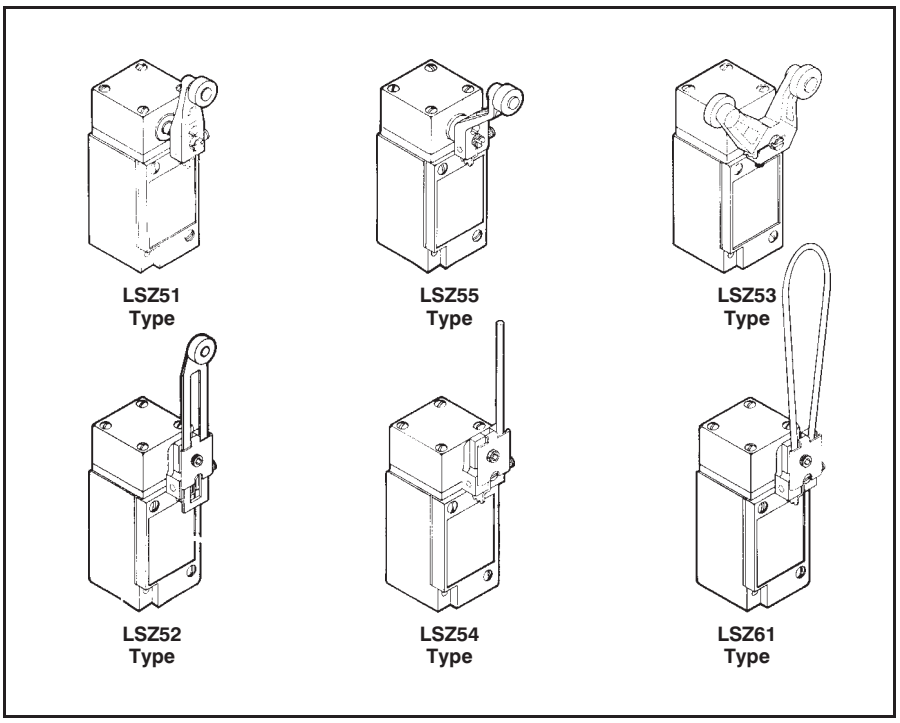

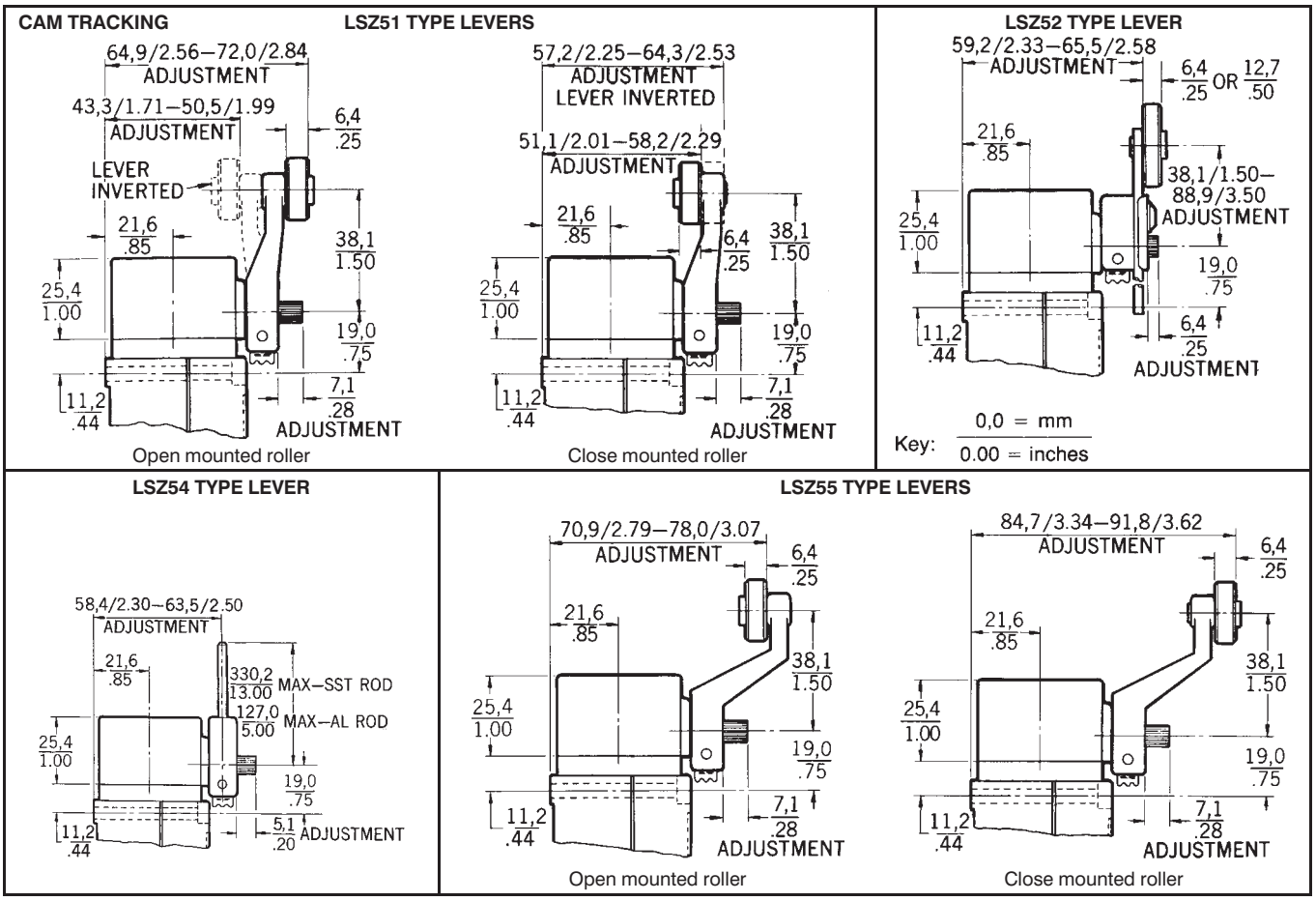

NOTE: Shaft dia. is .29 in.

Limit and Enclosed Switches

Levers for Rotary Actuated Switches

Rollers may be mounted on the front or back side of the lever. (See below).

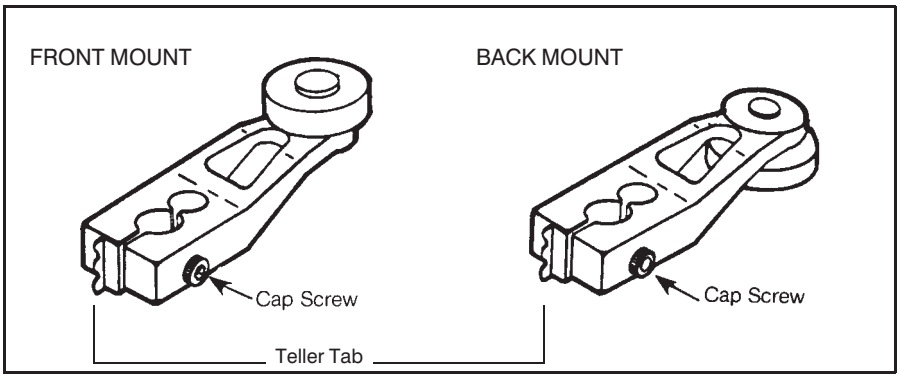

Levers shown in the order guides are furnished with cap screws which accommodate a 9⁄64-inch allen wrench.

Teller tab assures proper torque. When it cannot be moved, the lever is tight enough to prevent slippage.

ORDER GUIDE

Type	Radius (in.)	Roller Mounted On This Side Of Lever	Dia. in.	Width in.	Material	Catalog Listings
LSZ51 Series	1.5	Front	.75	.25	Nylon	**LSZ51A**
Std.	1.5	Front	.75	.25	Steel	**LSZ51B**
Roller	1.5	Back	.75	.25	Nylon	**LSZ51C**
Lever	1.5	Back	.75	.25	Steel	**LSZ51D**
	1.5	Front	1.0	.50	Nylon	**LSZ51F**
	1.5	Front	1.5	.25	Nylon	**LSZ51G**
	1.5	Back	1.0	.50	Nylon	**LSZ51J**
	1.5	Back	.75	.25	Ball Bearing	**LSZ51L**
	1.5	Back	.75	1.30	Nylon	**LSZ51M**
	1.5	Back	.75	.375	Stainless	**LSZ51T**
	1.5	Front	.75	.50	Nylon	**LSZ51P**
	1.5	Front	1.59	.25	Nylon	**LSZ51R**
	1.5	—	—	—	Less Roller	**LSZ51**
LSZ53 Series	1.5	Front-Back	.75	.25	Nylon	**LSZ53A**
Yoke	1.5	Front-Back	.75	.25	Steel	**LSZ53B**
	1.5	Front-Front	.75	.25	Steel	**LSZ53D**
	1.5	Back-Front	.75	.25	Nylon	**LSZ53E**
	1.5	Back-Back	.75	.25	Nylon	**LSZ53S**
	1.5	Back-Back	.75	.25	Steel	**LSZ53P**
	1.5	Back-Front	.75	.25	Steel	**LSZ53U**
	1.5	Back-Front	.75	1.25	Nylon	**LSZ53M**
	1.5	—	—	—	Less Rollers	**LSZ53**
Back view of LSZ53E						
LSZ55 Series	1.5	—	—	—	Less Roller	**LSZ55**
Offset	1.5	Back	.75	.25	Nylon	**LSZ55A**
	1.5	Back	.75	.25	Steel	**LSZ55B**
	1.5	Front	.75	.25	Nylon	**LSZ55C**
	1.5	Front	.75	.25	Steel	**LSZ55D**
	1.5	Front	.75	.50	Nylon	**LSZ55E**
	1.5	Front	1.5	.25	Nylon	**LSZ55K**
	1.5	Front	1.0	.50	Nylon	**LSZ55F**
LSZ69 Series*		—	6.0	—	Stainless (spokes replaceable)	**LSZ69CA**

*For use with LSQ300 Series. Hub is aluminum. See page A59 for dimensions.

Levers for Rotary Actuated Switches

METRIC CONVERSION

.25	in.	=	6,35 mm
.5	in.	=	12,7 mm
.625	in.	=	15,9 mm
.75	in.	=	19,1 mm
1.0	in.	=	25,4 mm
1.5	in.	=	38,1 mm
2.0	in.	=	50,8 mm
2.5	in.	=	63,5 mm
3.0	in.	=	76,2 mm
4.8	in.	=	122 mm
5.0	in.	=	127 mm
6.0	in.	=	152 mm
12.0	in.	=	305 mm

LOW TORQUE APPLICATION CONSIDERATION

When heavier levers (such as LSZ52 series and LSZ54 series, below), are used with low torque LSH, LSR, LSS and LST switches, it is desirable to mount the switch with the lever down. In this way, gravity will assist in restoring levers to the free position.

Conversely, when these switches are mounted with the lever upright, gravity tends to work to prevent lever return after switching actuation. By counterbalancing the lever or adding an auxiliary extension spring, this problem may be overcome. Contact the 800 number for application assistance.

ORDER GUIDE

Type	Radius (in.)	Roller Mounted On This Side Of Lever	Dia. in.	Width in.	Material	Catalog Listings
LSZ52 Series	1.5-3.5	Back	.75	.25	Nylon	**LSZ52A**
Adjustable	1.5-3.5	Back	.75	.25	Steel	**LSZ52B**
Radius	1.5-3.5	Front	.75	.25	Nylon	**LSZ52C**
	1.5-3.5	Front	.75	.25	Steel	**LSZ52D**
	1.5-3.5	Front	.75	1.30	Nylon	**LSZ52E**
	1.5-3.5	Front	1.0	.5	Nylon	**LSZ52J**
	1.5-3.5	Front	1.5	.25	Nylon	**LSZ52K**
	1.5-3.5	Front	.75	.25	Ball Bearing	**LSZ52L**
	1.5-3.5	Front	2.0	.25	Nylon	**LSZ52M**
	1.5-3.5	Front	.75	.5	Nylon	**LSZ52N**
					Less Roller	**LSZ52**
					Hub Only	**LSZ54**
LSZ68 Series	12.0	—	.25	—	Delrin Rod w/Spring	**LSZ68**
Spring/Rod	16.0	—	.25	—	Delrin Rod w/Spring	**LSZ617**
LSZ54 Series	5.5	—	—	—	Aluminum	**LSZ54M**
Rod	13.0	—	—	—	Stainless Steel	**LSZ54N**
	20.0	—	—	—	Delrin Rod	**LSZ54P**
	12.0	—	—	—	Spring Wire	**LSZ54R**
	4.8	—	—	—	Flexible Cable	**LSZ54V***
					Hub Only	**LSZ54**
LSZ61 Series Flexible Loop		6″ Flexible Loop/Cap Screw 9.5″ Flexible Loop/Cap Screw (measured from center line of shaft hole to tip of actuator)			Nylatron Hub Only	**LSZ61** LSZ618 LSZ54
LSZ60 Series		Front	.75	.25	Nylon	LSZ60A
One Way		Front	.75	.25	Steel	LSZ60B
Roller Lever						

See page A60 for dimensions

*Hub not available separately.

Levers for Rotary Actuated Switches

FIXED LENGTH LEVERS ORDER GUIDE

Fixed Length Levers LSZ65 Series	Lever Length (in.)	Lever Listing	For a complete listing add your choice of roller suffix: Roller Suffix	Dia. in.	Width in.	Material
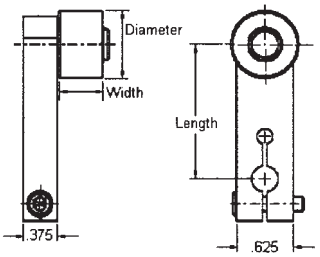	.88	LSZ65A____	A	.75	.25	Nylon
	1.38	LSZ65B____	B	.75	.25	Steel
	1.25	LSZ65L____				
	1.50	LSZ65C____	C	.75	.50	Nylon
	1.75	LSZ65D____	D	.75	1.30	Nylon
	2.00	LSZ65E____	E	1.00	.50	Nylon
	2.50	LSZ65F____	F	1.50	.25	Nylon
	3.00	LSZ65G____				
	4.00	LSZ65H____				
	5.00	LSZ65J____				
	6.00	LSZ65K____				

Example:
LSZ65AB is a .88″ long lever with a steel .75″ diameter, .25″ wide roller.

RUBBER ROLLER LEVERS

Ideal for elevator or conveyor applications requiring quiet operation or protection of delicate surfaces.

ORDER GUIDE

Type	Radius (in.)	Roller Mounted On This Side Of Lever	Dia. in.	Width in.	Material	Catalog Listing
LSZ51 Series Std. Roller Lever 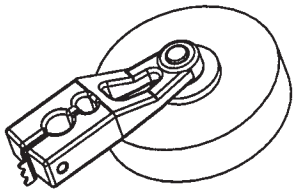	1.5	Front	1.6	.5	Rubber	LSZ51W
	1.5	Front	2.0	.5	Rubber	LSZ51Y
LSZ55 Series Offset 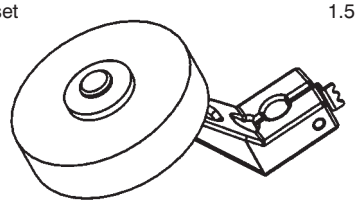	1.5	Front	1.6	.50	Rubber	LSZ55W
	1.5	Front	2.0	.50	Rubber	LSZ55Y
LSZ52 Series Adjustable Radius 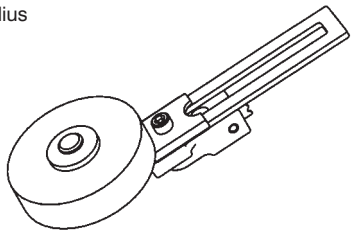	1.5 to 3.5	Front	1.6	.50	Rubber	LSZ52W
	1.5 to 3.5	Front	2.0	.50	Rubber	LSZ52Y
LSZ67 Series Conveyor Roller 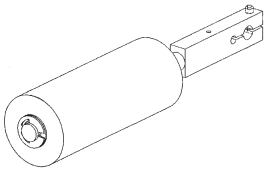	—	—	1.5	3.8	Plastic	LSZ67AA

Limit/Enclosed

Plunger Actuated Switches

ASSEMBLED CONDITIONS

Catalog listings in order guide below are factory assembled with:

- Side plungers facing front (label side) of switch. Rollers on side plungers are in horizontal position.
- Roller on top plungers are parallel to mounting surface.
- Lights on indicator versions are wired to N.O. circuit.

Refer to facing page to specify modifications to these assembled conditions.

For low temperature, high temperature or preleaded versions see page A42.

Circuitry For Maintained Plunger

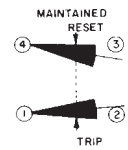

SPDT Double Break (Electrical rating **A**)

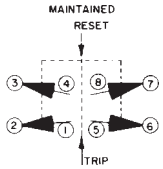

DPDT Double Break (Electrical rating **B**)

Circuits on any one pole must be the same polarity.

ORDER GUIDE

Momentary action, except for maintained contact LSG version. UL listed, CSA certified.

Catalog listings in this chart are complete switches.			Catalog Listings						
			Top Plungers			Side Plungers			
Circuitry	**Elec. Rating Page A34**	**Body** Style**	**Plain**	**Roller**	**Adjustable**	**Plain**	**Roller**	**Adjustable**	**Maintained** (Circuitry Shown Above)
Silver contacts	A	Plug-in ½″ Conduit	**LSC1A**	**LSD1A**	**LSV1A**	**LSE1A**	**LSF1A**	**LSW1A**	LSG1A
Gold cross pt.	C	Plug-in ½″ Conduit	LSC1J	LSD1J	LSV1J	LSE1J	LSF1J	LSW1J	—
Gold plated	C		—	LSD1E	—	—	LSF1E	LSW1E	—
Silver contacts	A*	120 V. Ind. Lite Plug-in ½″ Conduit*	**LSC5A**	**LSD5A**	LSV5A	LSE5A	LSF5A	LSW5A	LSG5A
	A*	240 V. Ind. Lite Plug-in ½″ Conduit*	LSC8A	LSD8A	LSV8A	LSE8A	LSF8A	LSW8A	LSG8A
SPDT Double Break	A	Non plug-in ½″ Conduit	**LSC3K**	**LSD3K**	**LSV3K**	**LSE3K**	**LSF3K**	**LSW3K**	LSG3K
Silver contacts	B	Plug-in ¾″ Conduit	LSC2B	**LSD2B**	LSV2B	LSE2B	LSF2B	LSW2B	LSG2B
	B	120 V Ind. Lite Plug-in ¾″ Conduit	LSC2R	LSD2R	LSV2R	LSE2R	LSF2R	LSW2R	LSG2R
	B	Plug-in ½″ Conduit	LSC6B	**LSD6B**	LSV6B	LSE6B	LSF6B	LSW6B	LSG6B
	B	Non plug-in ¾″ Conduit	LSC4L	LSD4L	LSV4L	LSE4L	LSF4L	LSW4L	LSG4L
DPDT Double Break	B	Non plug-in ½″ Conduit	LSC7L	LSD7L	LSV7L	LSE7L	LSF7L	LSW7L	LSG7L
SPNC Direct Acting	D	Non plug-in ½″ Conduit	—	—	—	LSE3N	LSF3N	LSW3N	LSG3N

*Use at voltage indicated for light. Upper operating temperature limit for lighted units is 200°F. Wired to N.O. circuit. **Plug-in listings include base receptacle.

OPERATING CHARACTERISTICS

Pretravel (in. max.)	mm (in.)	1,78 .070	1,78 .070	1,78 .070	2,54 .100	2,54 .100	2,54 .100	4,32 .170
Differential Travel (in. max.)	SPDT mm (in.)	0,38 .015	0,38 .015	0,38 .015	0,64 .025	0,64 .025	0,64 .025	2,29 .090
	DPDT mm (in.)	0,51 .020	0,51 .020	0,51 .020	0,89 .035	0,89 .035	0,89 .035	2,29 .090
Overtravel (in. min.)	mm (in.)	4,83 .190	4,83 .190	4,83 .190	4,83 .190	4,83 .190	4,83 .190	2,0 .080
Operating Force (lb. max.)	Newton (lb.)	17,8 4	17,8 4	17,8 4	26,7 6	26,7 6	26,7 6	44,5 10
Operating Point	mm (in.)	45,8 ±0,76 1.805 ±.030	55,9 ±1,02 2.200 ±.040	53,0 to 59,3 2.085 to 2.335	33,0 ±0,76 1.300 ±.030	44,1 ±1,02 1.735 ±.040	41,0 to 47,4 1.615 to 1.865	37,6 ±0,76 1.480 ±.030
Operating Temperature Range		10°F to 200°F –12 to 93°C		10°F to 200°F –12 to 93°C		10°F to 200°F –12 to 93°C		30°F to 200°F –1 to 93°C

Plunger Actuated Switches/Assembly Modifications

ASSEMBLY MODIFICATIONS

How to order
To specify other than the normal assembled conditions described on facing page, add the following modification numbers to the catalog listing in the plunger switch order guide.

Mod.
3 Side plunger to right of switch front
4 Side plunger to left of switch front
5 Side plunger to back of switch
6 Roller on top plungers perpendicular to mounting surface
7 Light on indicator versions wired to N.C. circuit
8 Roller on side plungers in vertical position.

Example:
LSF1A3 is an LSF1A with the side roller plunger to the right side.

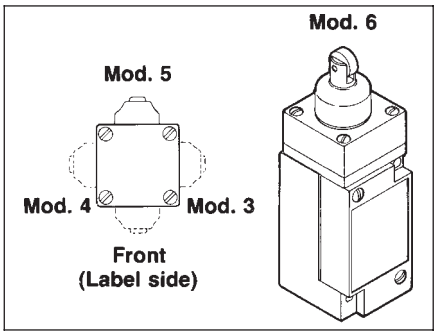

Wobble Actuated Switches

Wobble actuated switches have flexible levers which may be operated with any movement, except direct pull.

ORDER GUIDE
Momentary action. UL listed, CSA certified

Catalog listings in this chart are complete switches.			Catalog Listings				
Lever lengths measured from top mounting hole			**5.5″**	**13″**	**5.5″**	**5.5″**	**5.5″**
Circuitry	**Elec. Rating Page A34**	**Body** Style**	**Delrin Rod**	**Spring Wire**	**Cat*** Whisker**	**Cable**	**Coil Spring**
Silver contacts	A	Plug-in ½″ Conduit	**LSJ1A-7A**	**LSJ1A-7M**	LSK1A-8A	**LSJ1A-7N**	**LSK1A-8C**
Gold cross point	C	Plug-in ½″ Conduit	LSJ1J-7A	LSJ1J-7M	LSK1J-8A	LSJ1J-7N	LSK1J-8C
Gold plated contacts	C		—	LSJ1E-7M	—	—	—
Silver contacts 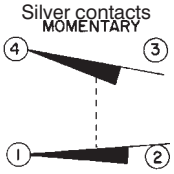 SPDT Double Break	A*	120 V. Ind. Lite Plug-in ½″ Conduit*	LSJ5A-7A	LSJ5A-7M	LSK5A-8A	LSJ5A-7N	LSK5A-8C
	A*	240 V. Ind. Lite Plug-in ½″ Conduit*	LSJ8A-7A	LSJ8A-7M	LSK8A-8A	LSJ8A-7N	LSK8A-8C
	A	Non plug-in ½″ Conduit	**LSJ3K-7A**	**LSJ3K-7M**	LSK3K-8A	**LSJ3K-7N**	**LSK3K-8C**
Silver contacts 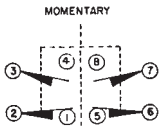 DPDT Double Break	B	Plug-in ¾″ Conduit	LSJ2B-7A	LSJ2B-7M	LSK2B-8A	LSJ2B-7N	LSK2B-8C
	B	120 V Ind. Lite Plug-In ¾″ Conduit	LSJ2R-7A	LSJ2R-7M	LSK2R-8A	LSJ2R-7N	LSK2R-8C
	B	Plug-in ½″ Conduit	LSJ6B-7A	LSJ6B-7M	LSK6B-8A	LSJ6B-7N	LSK6B-8C
	B	Non plug-in ¾″ Conduit	LSJ4L-7A	LSJ4L-7M	LSK4L-8A	LSJ4L-7N	LSK4L-8C
	B	Non plug-in ½″ Conduit	LSJ7L-7A	LSJ7L-7M	LSK7L-8A	LSJ7L-7N	LSK7L-8C

OPERATING CHARACTERISTICS

mm Pretravel (approx. in. radius)	25,4 1	102 4	51 2	38 1.5	51 2
Newton Operating Force (oz. max.)	2,78 10	1,39 5	1,39 5	1,95 7	1,95 7
Operating Temperature Range	10°F to 200°F 12 to 93°C				

* Use at voltage indicated for light. Upper operating temperature limit for lighted units is 200°F.
** Plug-in listings include base receptacle.
*** These cat whiskers have 5½ inch long levers. To specify 7½ inch length, substitute **-8B** for **-8A**.

OCEAN CHIPS
Океан Электроники
Поставка электронных компонентов

Компания «Океан Электроники» предлагает заключение долгосрочных отношений при поставках импортных электронных компонентов на взаимовыгодных условиях!

Наши преимущества:

- Поставка оригинальных импортных электронных компонентов напрямую с производств Америки, Европы и Азии, а так же с крупнейших складов мира;
- Широкая линейка поставок активных и пассивных импортных электронных компонентов (более 30 млн. наименований);
- Поставка сложных, дефицитных, либо снятых с производства позиций;
- Оперативные сроки поставки под заказ (от 5 рабочих дней);
- Экспресс доставка в любую точку России;
- Помощь Конструкторского Отдела и консультации квалифицированных инженеров;
- Техническая поддержка проекта, помощь в подборе аналогов, поставка прототипов;
- Поставка электронных компонентов под контролем ВП;
- Система менеджмента качества сертифицирована по Международному стандарту ISO 9001;
- При необходимости вся продукция военного и аэрокосмического назначения проходит испытания и сертификацию в лаборатории (по согласованию с заказчиком);
- Поставка специализированных компонентов военного и аэрокосмического уровня качества (Xilinx, Altera, Analog Devices, Intersil, Interpoint, Microsemi, Actel, Aeroflex, Peregrine, VPT, Syfer, Eurofarad, Texas Instruments, MS Kennedy, Miteq, Cobham, E2V, MA-COM, Hittite, Mini-Circuits, General Dynamics и др.);

Компания «Океан Электроники» является официальным дистрибьютором и эксклюзивным представителем в России одного из крупнейших производителей разъемов военного и аэрокосмического назначения **«JONHON»**, а так же официальным дистрибьютором и эксклюзивным представителем в России производителя высокотехнологичных и надежных решений для передачи СВЧ сигналов **«FORSTAR»**.

AVIC JONHON

«JONHON» (основан в 1970 г.)

Разъемы специального, военного и аэрокосмического назначения:

(Применяются в военной, авиационной, аэрокосмической, морской, железнодорожной, горно- и нефтедобывающей отраслях промышленности)

«FORSTAR» (основан в 1998 г.)

ВЧ соединители, коаксиальные кабели, кабельные сборки и микроволновые компоненты:

(Применяются в телекоммуникациях гражданского и специального назначения, в средствах связи, РЛС, а так же военной, авиационной и аэрокосмической отраслях промышленности).

FORSTAR®

Телефон: 8 (812) 309-75-97 (многоканальный)
Факс: 8 (812) 320-03-32
Электронная почта: ocean@oceanchips.ru
Web: http://oceanchips.ru/
Адрес: 198099, г. Санкт-Петербург, ул. Калинина, д. 2, корп. 4, лит. А