5.5kV E-Rated

Medium voltage fuses for feeder circuit, switchgear and transformer protection

Description:

- E-Rated, current-limiting, medium voltage fuses for feeder circuit, switchgear and transformer protection.

Features and benefits

- Current-limiting E-Rated medium voltage fuses are defined by their melting time-current characteristic that permit their electrical interchangeability with other fuses of the same E Rating.
- E-Rated fuses must have a defined current response time specified by ANSI C37.46. E-Rated fuse of 100 amps and below must melt in 300 seconds at an RMS current within the range of 200% to 240% of the fuse's nameplate current rating. E-Rated fuses greater than 100 amps must melt in 600 seconds at an RMS current within the range of 220% to 264% of the fuse's nameplate current rating.
- E-Rated fuses are physically dimensioned for easy installation in existing hardware.
- Current-limiting fuses provide positive interruption even on low fault currents. The fuse limits the magnitude of electromechanical stresses in the protected apparatus.
- Constructions available in ferrule, bolt-on and clip-lock, and specialty mount fuses for AMPGARD™ motor starters.
- Outdoor rating available on select catalog numbers (requires installation in a suitable enclosure).
- Open fuse indicator easily integrates into automation schemes and speeds troubleshooting by providing a positive visual indication of fuse operation.
- 50/60Hz operating frequency for worldwide application.
- Mountings are available in disconnect and non-disconnect versions with porcelain or glass polyester insulators.
- Live parts and end fittings available.

Typical applications:

- Medium voltage transformer primary protection
- Medium voltage feeder circuit protection
- Medium voltage switches
- Medium voltage metal-enclosed switchgear

Powering Business Worldwide

E-Rated medium voltage ferrule fuses

Catalog symbols:

- General purpose:
  - 5CLE-_E-D (10-25A)
  - 5CLE-_E (10-1350A)
  - 5HLE-_E (10-450A)
  - JCY-_E (1-25A)
- Full range (per ANSI C37.40)
  - MV055F_ (10-450A)

Ratings*:

- Volts
  - 5.5kV
- Amps
  - 1 to 1350A
- Interrupting ratings
  - 40 to 63kA RMS Sym

* See catalog number tables for voltages, ampacities and interrupting ratings by catalog number.

Agency information:

- E-Rated fuses meet the performance characteristics of ANSI C37.46
- UL® Listed, Guide JEEG, File E240398. See catalog numbers.

Dimensions (see catalog number tables for values)

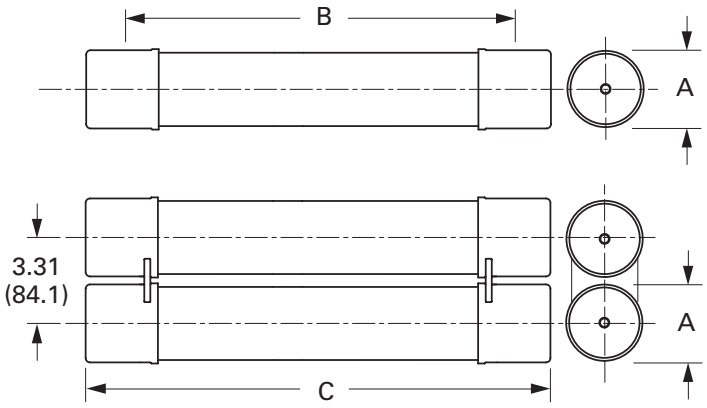

Recommended fuseclips and holders:

CLE and HLE

Amp rating	Fuse mounting type*	Voltage BIL (kV)	Approximate dimensions - in (mm) Diameter A	Clip center B	Length C	Catalog number: Mounting (including live parts, end fittings)** Porcelain insulator	Glass-polyester insulator	Live parts (including end fittings)	End fittings (disconnect only)
CLE									
10E-D–25E-D 30E–250E Single barrel	Non-disconnect	60	3.0 (76.2)	14.0 (355.6)	17.9 (454.7)	5CLE-PNM-D	5CLE-GNM-D	CLE-NL-D	—
	Disconnect†	60				5CLE-PDM-D	5CLE-GDM-D	CLE-DL-D	CLE-DF-D
15E–25E Single barrel	Non-disconnect	60	2.0 (50.8)	11.5 (292.1)	12.9 (327.7)	5CLE-PNM-C	5CLE-GNM-C	CLE-NL-C	—
	Disconnect†	60				5CLE-PDM-C	5CLE-GDM-C	CLE-DL-C	CLE-DF-C
300E–450E Double barrel	Non-disconnect	60	3.0 (76.2)	14.0 (355.6)	17.9 (454.7)	5CLE-PNM-E	5CLE-GNM-E	CLE-NL-E	—
	Disconnect†	60				5CLE-PDM-E	5CLE-GDM-E	CLE-DL-E	CLE-DF-E
600E and 750E Double barrel	Consult factory	60	4.0 (101.6)	N/A	N/A	—	—	—	—
1100E and 1350E Four barrel	Consult factory	—	4.0 (101.6)	N/A	N/A	—	—	—	—
HLE									
10E-D–250E Single barrel	Non-disconnect	60	3.0 (76.2)	12.0 (304.8)	15.9 (403.9)	5HLE-PNM-D	5HLE-GNM-D	CLE-NL-D	—
	Disconnect	60				5HLE-PDM-D	5HLE-GDM-D	CLE-DL-D	CLE-DF-D
300E–450E Double barrel	Non-disconnect	60	3.0 (76.2)	12.0 (304.8)	15.9 (403.9)	5HLE-PNM-E	5HLE-GNM-E	CLE-NL-E	—
	Disconnect	60				5HLE-PDM-E	5HLE-GDM-E	CLE-DL-E	CLE-DF-E

* See page 12 for illustrations and dimensions
** End fittings supplied only when required.
† Disconnect mountings provide a means for fuse extraction only. Do not use a disconnect mounting for load switching or fuse removal while energized.

CLE, HLE and JCY general purpose

Amp rating	Dimensions - in (mm) Length A	Diameter B	Clip centers C	Interrupting rating kA (RMS Sym.)	Number of barrels	Installation location	Catalog number
1	11.2 (284)	2 (51)	9 (229)	40	1	Indoor/outdoor	JCY-1E
2	11.2 (284)	2 (51)	9 (229)	40	1	Indoor/outdoor	JCY-2E
3	11.2 (284)	2 (51)	9 (229)	40	1	Indoor/outdoor	JCY-3E
5	11.2 (284)	2 (51)	9 (229)	40	1	Indoor/outdoor	JCY-5E
7	11.2 (284)	2 (51)	9 (229)	40	1	Indoor/outdoor	JCY-7E
10	11.2 (284)	2 (51)	9 (229)	40	1	Indoor/outdoor	JCY-10E
10	17.9 (455)	3 (76)	14 (356)	63	1	Indoor/outdoor	5CLE-10E-D
10	15.9 (404)	3 (76)	12 (305)	63	1	Indoor/outdoor	5HLE-10E
15	11.2 (284)	2 (51)	9 (229)	40	1	Indoor/outdoor	JCY-15E
15	12.9 (328)	2 (51)	11.5 (292)	50	1	Indoor	5CLE-15E*
15	17.9 (455)	3 (76)	14 (356)	63	1	Indoor/outdoor	5CLE-15E-D
15	15.9 (404)	3 (76)	12 (305)	63	1	Indoor/outdoor	5HLE-15E
20	11.2 (284)	2 (51)	9 (229)	40	1	Indoor/outdoor	JCY-20E
20	12.9 (328)	2 (51)	11.5 (292)	50	1	Indoor	5CLE-20E*
20	17.9 (455)	3 (76)	14 (356)	63	1	Indoor/outdoor	5CLE-20E-D
20	15.9 (404)	3 (76)	12 (305)	63	1	Indoor/outdoor	5HLE-20E
25	11.2 (284)	2 (51)	9 (229)	40	1	Indoor/outdoor	JCY-25E
25	12.9 (328)	2 (51)	11.5 (292)	50	1	Indoor	5CLE-25E*
25	17.9 (455)	3 (76)	14 (356)	63	1	Indoor/outdoor	5CLE-25E-D
25	15.9 (404)	3 (76)	12 (305)	63	1	Indoor/outdoor	5HLE-25E
30	17.9 (455)	3 (76)	14 (356)	63	1	Indoor/outdoor	5CLE-30E
30	15.9 (404)	3 (76)	12 (305)	63	1	Indoor/outdoor	5HLE-30E
40	17.9 (455)	3 (76)	14 (356)	50	1	Indoor/outdoor	5CLE-40E†
40	15.9 (404)	3 (76)	12 (305)	63	1	Indoor/outdoor	5HLE-40E†
50	17.9 (455)	3 (76)	14 (356)	50	1	Indoor/outdoor	5CLE-50E†
50	15.9 (404)	3 (76)	12 (305)	63	1	Indoor/outdoor	5HLE-50E†
65	17.9 (455)	3 (76)	14 (356)	50	1	Indoor/outdoor	5CLE-65E†
65	15.9 (404)	3 (76)	12 (305)	63	1	Indoor/outdoor	5HLE-65E†
80	17.9 (455)	3 (76)	14 (356)	50	1	Indoor/outdoor	5CLE-80E†
80	15.9 (404)	3 (76)	12 (305)	63	1	Indoor/outdoor	5HLE-80E†
100	17.9 (455)	3 (76)	14 (356)	50	1	Indoor/outdoor	5CLE-100E†
100	15.9 (404)	3 (76)	12 (305)	63	1	Indoor/outdoor	5HLE-100E†
125	17.9 (455)	3 (76)	14 (356)	50	1	Indoor/outdoor	5CLE-125E†
125	15.9 (404)	3 (76)	12 (305)	63	1	Indoor/outdoor	5HLE-125E†
150	17.9 (455)	3 (76)	14 (356)	63	1	Indoor/outdoor	5CLE-150E†
150	15.9 (404)	3 (76)	12 (305)	63	1	Indoor/outdoor	5HLE-150E†
175	17.9 (455)	3 (76)	14 (356)	63	1	Indoor/outdoor	5CLE-175E†
175	15.9 (404)	3 (76)	12 (305)	63	1	Indoor/outdoor	5HLE-175E†
200	17.9 (455)	3 (76)	14 (356)	63	1	Indoor/outdoor	5CLE-200E†
200	15.9 (404)	3 (76)	12 (305)	63	1	Indoor/outdoor	5HLE-200E†
250	17.9 (455)	3 (76)	14 (356)	63	1	Indoor/outdoor	5CLE-250E†
250	15.9 (404)	3 (76)	12 (305)	63	1	Indoor/outdoor	5HLE-250E†
300	17.9 (455)	3 (76)	14 (356)	63	2	Indoor/outdoor	5CLE-300E†
300	15.9 (404)	3 (76)	12 (305)	63	2	Indoor/outdoor	5HLE-300E†
350	17.9 (455)	3 (76)	14 (356)	63	2	Indoor/outdoor	5CLE-350E†
350	15.9 (404)	3 (76)	12 (305)	63	2	Indoor/outdoor	5HLE-350E†
400	17.9 (455)	3 (76)	14 (356)	63	2	Indoor/outdoor	5CLE-400E†
400	15.9 (404)	3 (76)	12 (305)	63	2	Indoor/outdoor	5HLE-400E†
450	17.9 (455)	3 (76)	14 (356)	63	2	Indoor/outdoor	5CLE-450E†
450	15.9 (404)	3 (76)	12 (305)	63	2	Indoor/outdoor	5HLE-450E†

* Fuses conform to dimensional standards established by Westinghouse.

† UL Listed, Guide JEEG, File E240398.

5.5kV time-current curves — minimum melt for JCY-_E fuses

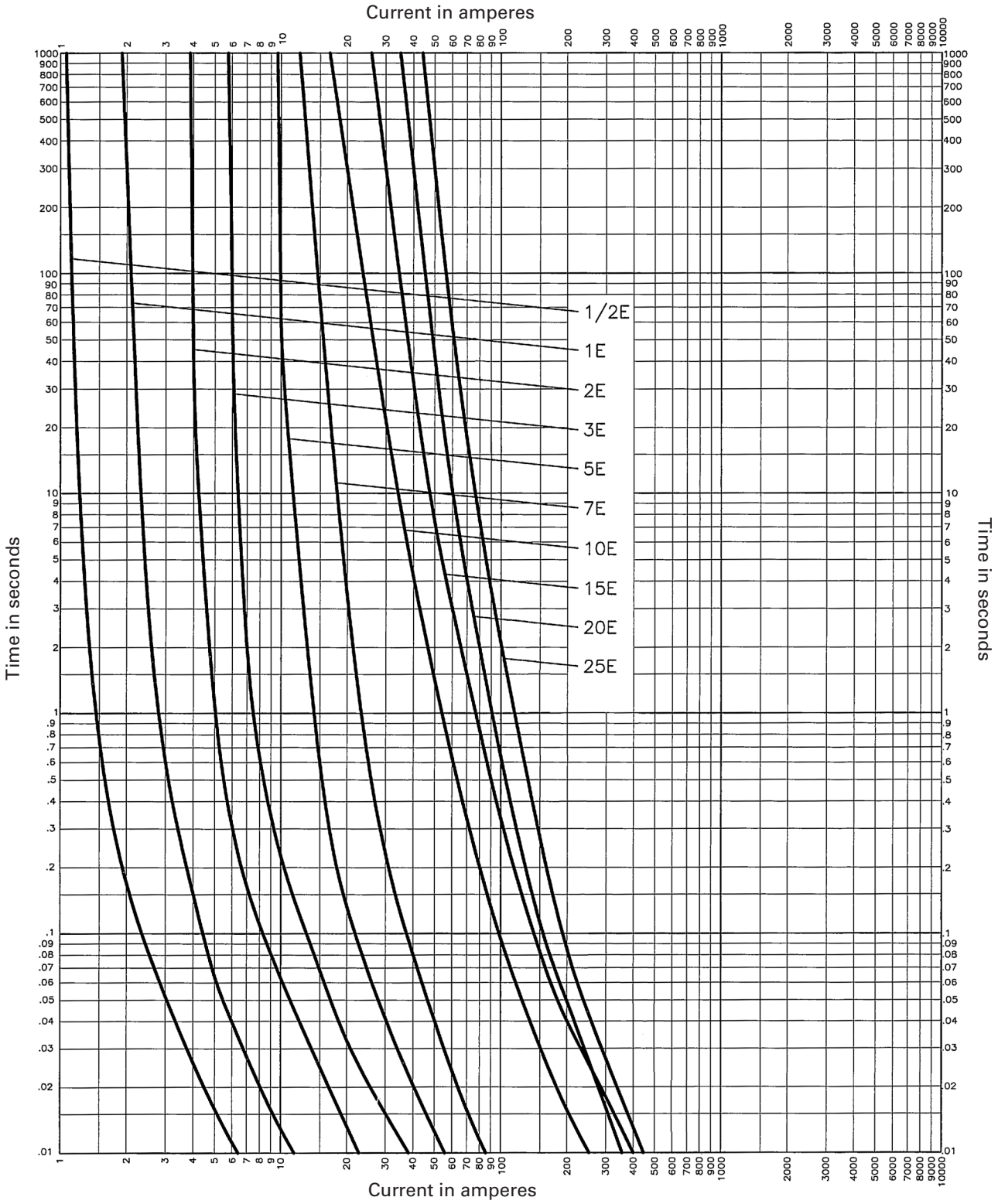

JCY-_

5.5kV time-current curves — total clear for JCY-_E fuses

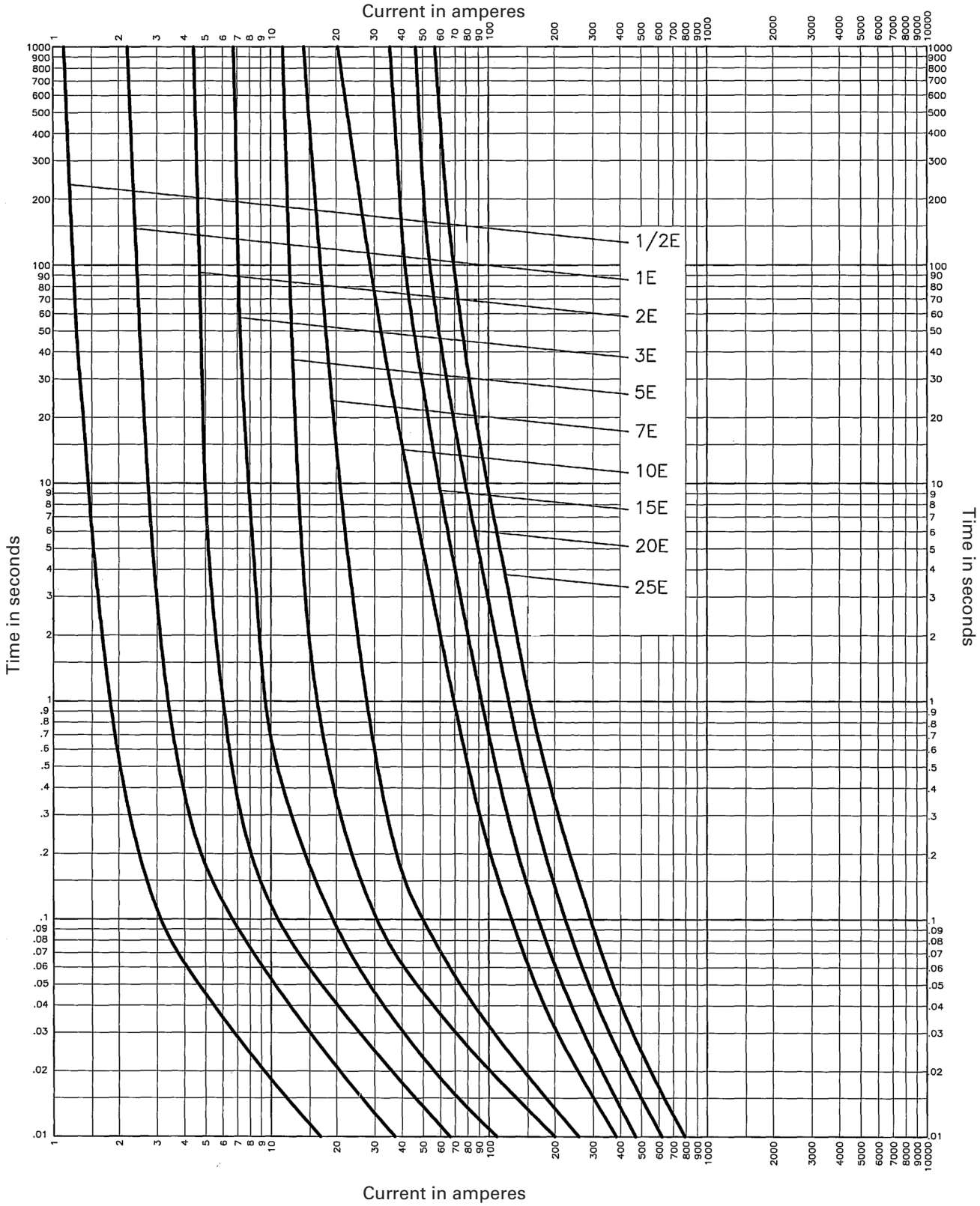

JCY-_

MV055 full range

Amp rating	Dimensions - in (mm) Length A	Diameter B	Clip centers C	Interrupting rating kA (RMS Sym.)	Number of barrels	Installation location	Catalog number
5	15.7 (399)	2 (51)	12 (305)	50	1	Indoor	MV055F1CAX5E
7	15.7 (399)	2 (51)	12 (305)	50	1	Indoor	MV055F1CAX7E
10	15.7 (399)	2 (51)	12 (305)	50	1	Indoor	MV055F1CAX10E
10	15.7 (399)	3 (76)	12 (305)	50	1	Indoor	MV055F1DAX10E
15	15.7 (399)	2 (51)	12 (305)	50	1	Indoor	MV055F1CAX15E
15	15.7 (399)	3 (76)	12 (305)	50	1	Indoor	MV055F1DAX15E
20	15.7 (399)	2 (51)	12 (305)	50	1	Indoor	MV055F1CAX20E
20	15.7 (399)	3 (76)	12 (305)	50	1	Indoor	MV055F1DAX20E
25	15.7 (399)	2 (51)	12 (305)	50	1	Indoor	MV055F1CAX25E
25	15.7 (399)	3 (76)	12 (305)	50	1	Indoor	MV055F1DAX25E
30	15.7 (399)	2 (51)	12 (305)	50	1	Indoor	MV055F1CAX30E
30	15.7 (399)	3 (76)	12 (305)	50	1	Indoor	MV055F1DAX30E
40	15.7 (399)	2 (51)	12 (305)	50	1	Indoor	MV055F1CAX40E
40	15.7 (399)	3 (76)	12 (305)	50	1	Indoor	MV055F1DAX40E
50	15.7 (399)	2 (51)	12 (305)	50	1	Indoor	MV055F1CAX50E
50	15.7 (399)	3 (76)	12 (305)	50	1	Indoor	MV055F1DAX50E
65	15.7 (399)	2 (51)	12 (305)	50	1	Indoor	MV055F1CAX65E
65	15.7 (399)	3 (76)	12 (305)	50	1	Indoor	MV055F1DAX65E
80	15.7 (399)	3 (76)	12 (305)	50	1	Indoor	MV055F1DAX80E
100	15.7 (399)	3 (76)	12 (305)	50	1	Indoor	MV055F1DAX100E
125	15.7 (399)	3 (76)	12 (305)	50	1	Indoor	MV055F1DAX125E
150	15.7 (399)	3 (76)	12 (305)	50	1	Indoor	MV055F1DAX150E
175	15.7 (399)	3 (76)	12 (305)	50	1	Indoor	MV055F1DAX175E
200	15.7 (399)	3 (76)	12 (305)	50	1	Indoor	MV055F1DAX200E
250	15.7 (399)	3 (76)	12 (305)	50	2	Indoor	MV055F2DAX250E
300	15.7 (399)	3 (76)	12 (305)	50	2	Indoor	MV055F2DAX300E
350	15.7 (399)	3 (76)	12 (305)	50	2	Indoor	MV055F2DAX350E
400	15.7 (399)	3 (76)	12 (305)	50	2	Indoor	MV055F2DAX400E
450	15.7 (399)	3 (76)	12 (305)	50	2	Indoor	MV055F2DAX450E

Recommended MV055 fuseclips:

Description	Fuse diameter - in (mm)	Figure	Clip dimensions - in (mm) A	B	C	D	E	F	G	Catalog number
Enclosed fuseclip	2 (51)	1	3.75 (95)	1.98 (50)	2.01 (51)	1.19 (30)	4.54 (115)	1.51 (38)	0.4 (10)	A3354710*
Enclosed fuseclip	3 (76)	1	4.14 (105)	2.45 (62)	3.01 (76)	1.19 (30)	5.64 (143)	1.51 (38)	0.4 (10)	A3354730*
Open fuseclip	3 (76)	2	See dimensions drawing							1A0065
Spring loaded open fuseclip	3 (76)	3	See dimensions drawing							9078A67G04

*For single barrel applications only. Not sold in pairs.

Figure 1

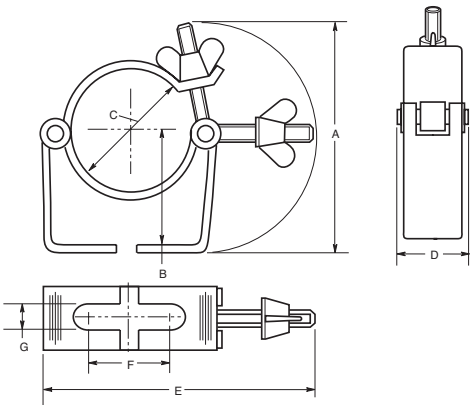

Figure 2

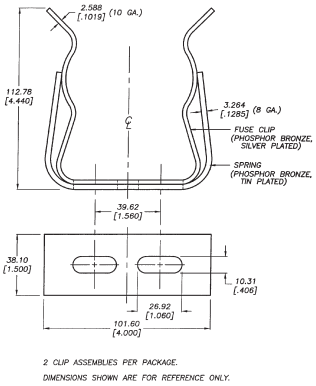

Figure 3

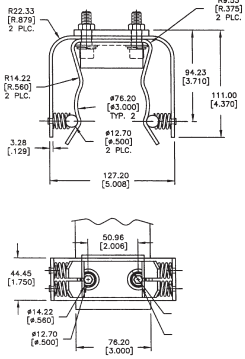

5.5kV time-current curves — minimum melt for MV055_ 2 inch diameter fuses

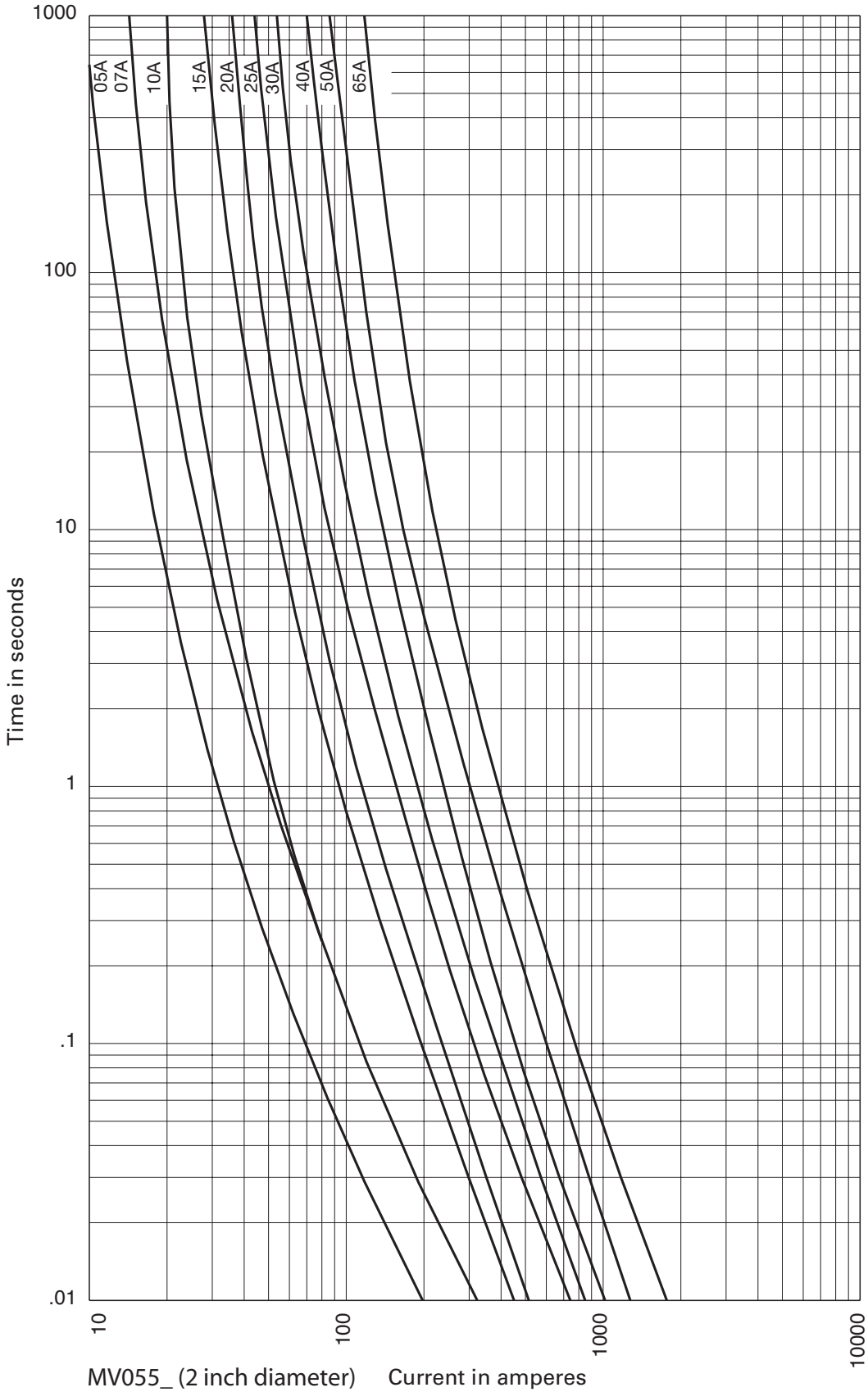

5.5kV time-current curves — total clear for MV055_ 2 inch diameter fuses

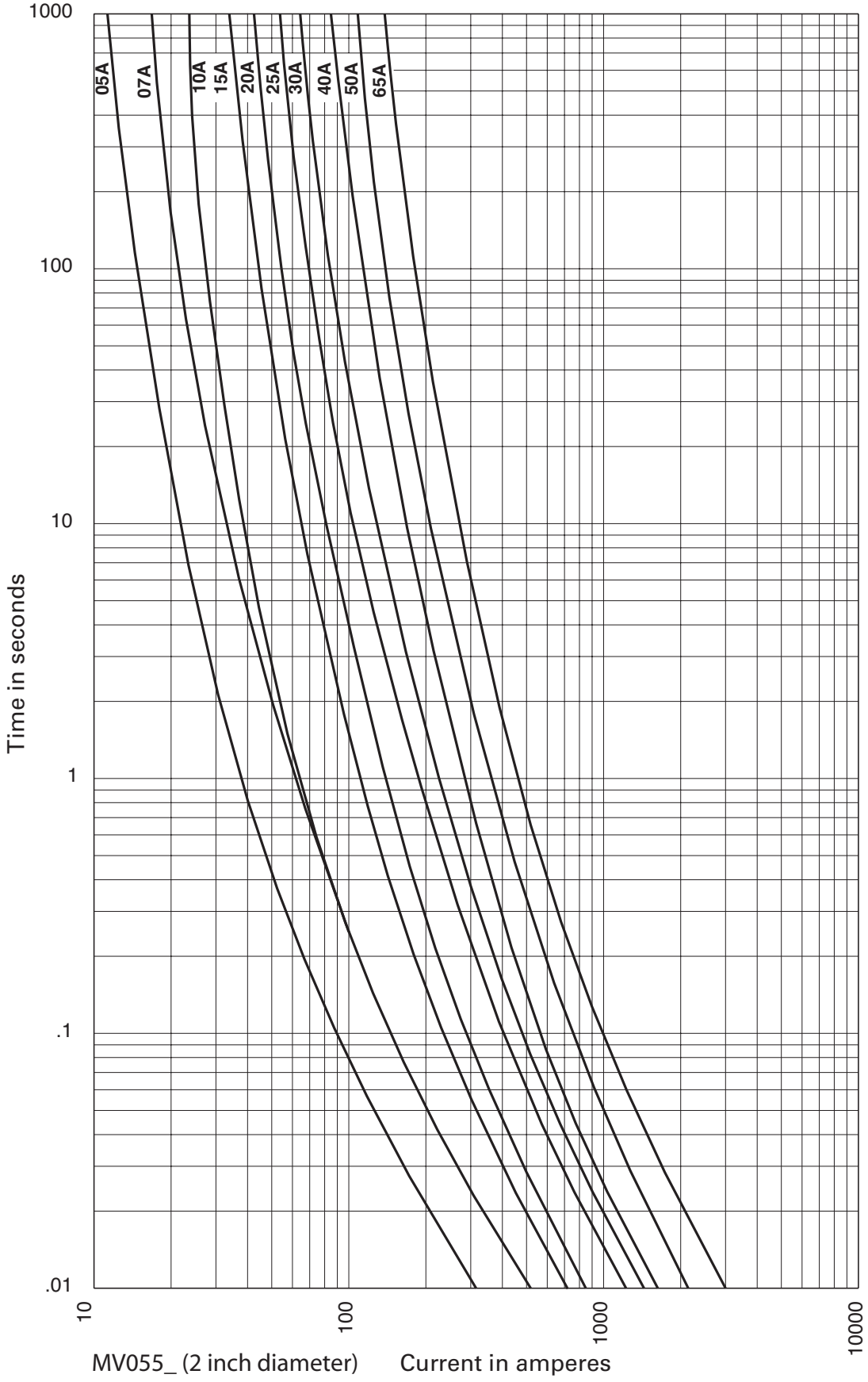

5.5kV time-current curves — minimum melt for MV055_ 3 inch diameter fuses

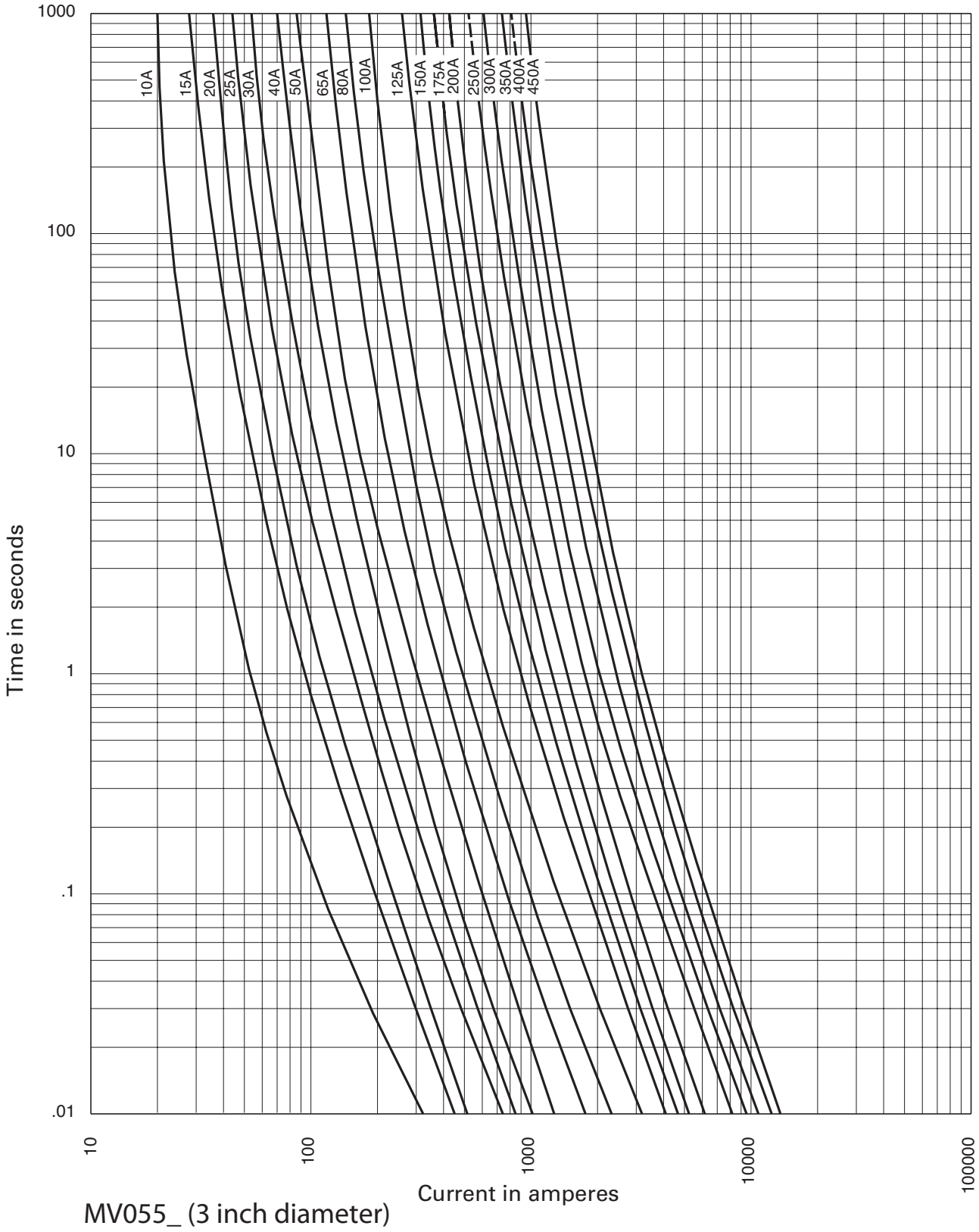

5.5kV time-current curves — total clear for MV055_ 3 inch diameter fuses

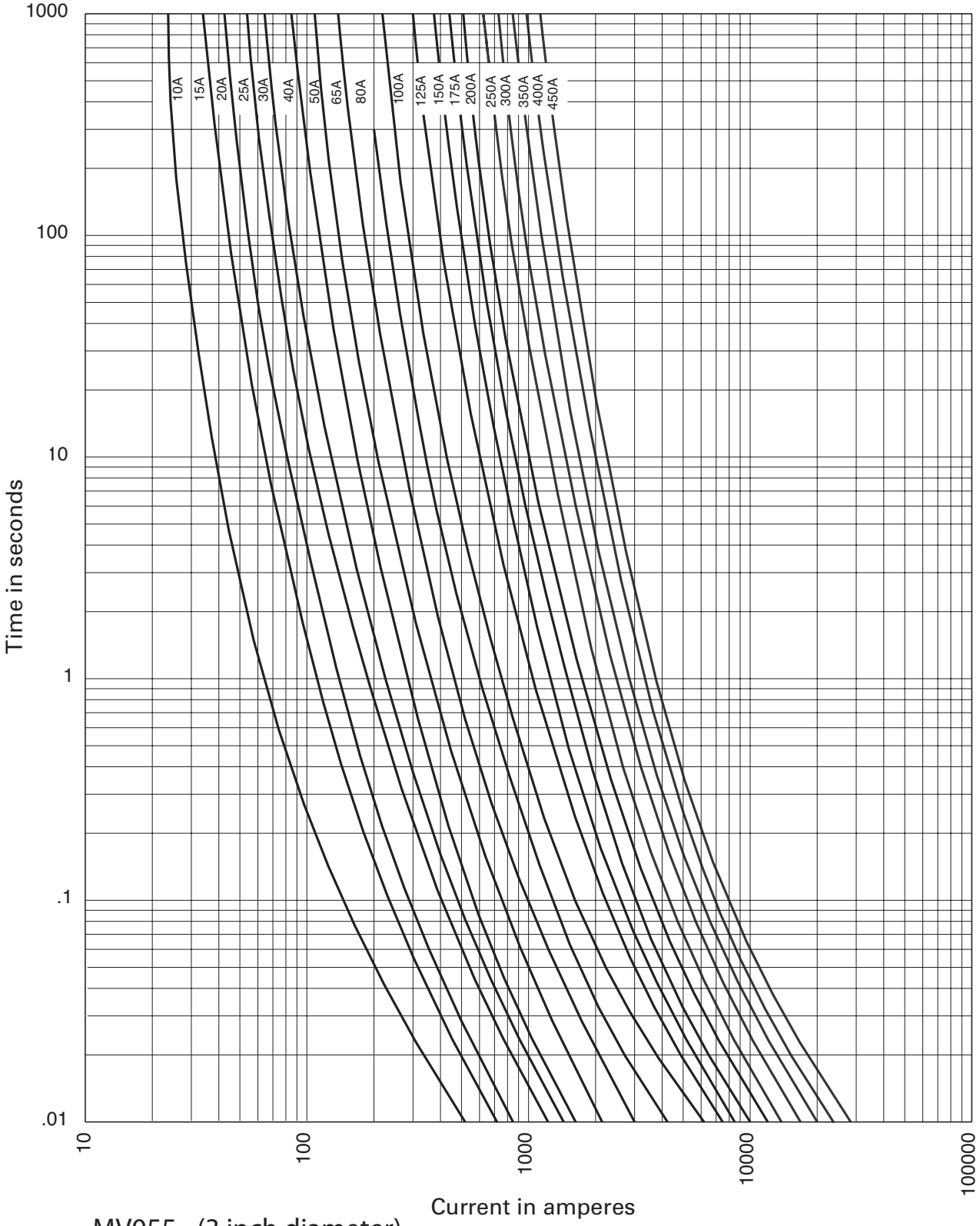

MV055_ (3 inch diameter)

5.5kV peak let-through for MV055_ 2 and 3 inch diameter fuses

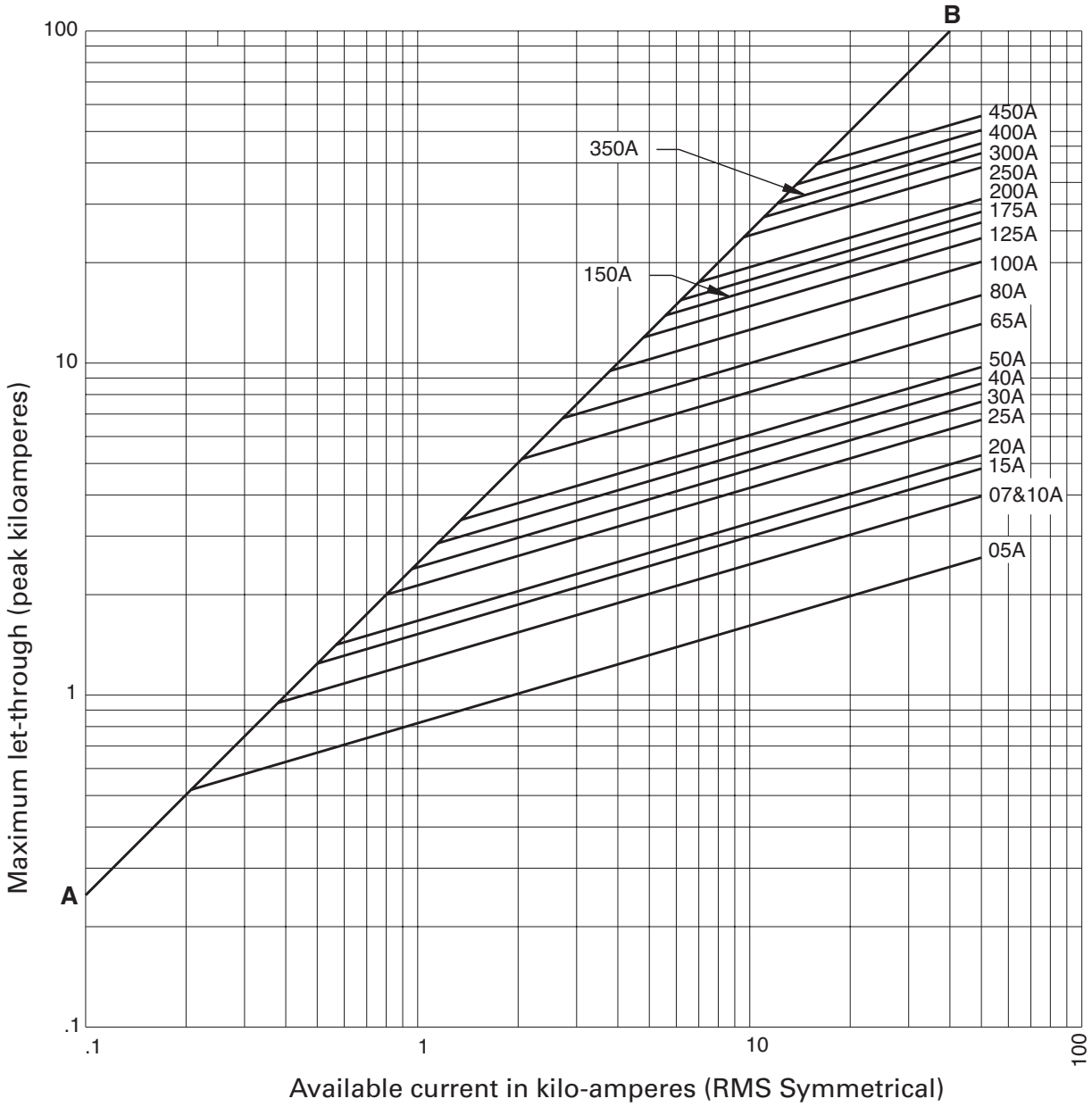

MV055_ (2 and 3 inch diameter)

CLE and HLE type mountings - in (mm)

Catalog number	Hole centers A	Hole centers B	Overall length C	Hole Inset D	Hole centers E	Contact height F	Overall height G	BIL kV
Disconnect single barrel†								
5CLE-GDM-C	12.74 (323.6)	6 (152.4)	25.5 (647.7)	0.75 (19)	1.75 (44.4)	4.5 (114.3)	9.75 (247.6)	60
5CLE-PDM-C	12.74 (323.6)	6 (152.4)	25.5 (647.7)	0.75 (19)	1.75 (44.4)	4.5 (114.3)	9.75 (247.6)	60
5CLE-GDM-D	15.24 (387.1)	6 (152.4)	25 (635)	0.62 (15.7)	1.75 (44.4)	4.5 (114.3)	11.72 (297.7)	60
5CLE-PDM-D	15.24 (387.1)	6 (152.4)	25 (635)	0.62 (15.7)	1.75 (44.4)	4.5 (114.3)	11.72 (297.7)	60
5HLE-GDM-D	16.25 (412.8)	6 (152.4)	23 (584.2)	0.62 (15.7)	1.75 (44.4)	4.5 (114.3)	11.72 (297.7)	60
5HLE-PDM-D	16.25 (412.8)	6 (152.4)	23 (584.2)	0.62 (15.7)	1.75 (44.4)	4.5 (114.3)	11.72 (297.7)	60
Disconnect double barrel†								
5CLE-GDM-E	15.24 (387.1)	6 (152.4)	25 (635)	0.62 (15.7)	1.75 (44.4)	4.5 (114.3)	15.28 (388.1)	60
5CLE-PDM-E	15.24 (387.1)	6 (152.4)	25 (635)	0.62 (15.7)	1.75 (44.4)	4.5 (114.3)	15.28 (388.1)	60
5HLE-GDM-E	16.25 (412.8)	6 (152.4)	23 (584.2)	0.62 (15.7)	1.75 (44.4)	4.5 (114.3)	15.28 (388.1)	60
5HLE-PDM-E	16.25 (412.8)	6 (152.4)	23 (584.2)	0.62 (15.7)	1.75 (44.4)	4.5 (114.3)	15.28 (388.1)	60
Non-disconnect single barrel								
5CLE-GNM-C	12.75 (323.8)	6 (152.4)	22 (558.8)	0.75 (19)	1.75 (44.4)	4.5 (114.3)	7.25 (184.1)	60
5CLE-PNM-C	12.75 (323.8)	6 (152.4)	22 (558.8)	0.75 (19)	1.75 (44.4)	4.5 (114.3)	7.25 (184.1)	60
5CLE-GNM-D	15.24 (387.1)	6 (152.4)	25 (635)	0.62 (15.7)	1.75 (44.4)	4.5 (114.3)	8.79 (223.3)	60
5CLE-PNM-D	15.24 (387.1)	6 (152.4)	25 (635)	0.62 (15.7)	1.75 (44.4)	4.5 (114.3)	8.79 (223.3)	60
5HLE-GNM-D	16.25 (412.7)	6 (152.4)	23 (584.2)	0.62 (15.7)	1.75 (44.4)	4.5 (114.3)	8.79 (223.3)	60
5HLE-PNM-D	16.25 (412.7)	6 (152.4)	23 (584.2)	0.62 (15.7)	1.75 (44.4)	4.5 (114.3)	8.79 (223.3)	60
Non-disconnect double barrel								
5CLE-GNM-E	15.24 (387.1)	6 (152.4)	25 (635)	0.62 (15.7)	1.42 (36.1)	4.5 (114.3)	12.48 (317)	60
5CLE-PNM-E	15.24 (387.1)	6 (152.4)	25 (635)	0.62 (15.7)	1.42 (36.1)	4.5 (114.3)	12.48 (317)	60
5HLE-GNM-E	16.25 (412.7)	6 (152.4)	23 (584.2)	0.62 (15.7)	1.75 (44.4)	4.5 (114.3)	12.48 (317)	60
5HLE-PNM-E	16.25 (412.7)	6 (152.4)	23 (584.2)	0.62 (15.7)	1.75 (44.4)	4.5 (114.3)	12.48 (317)	60

CLE and HLE type disconnect mounting†

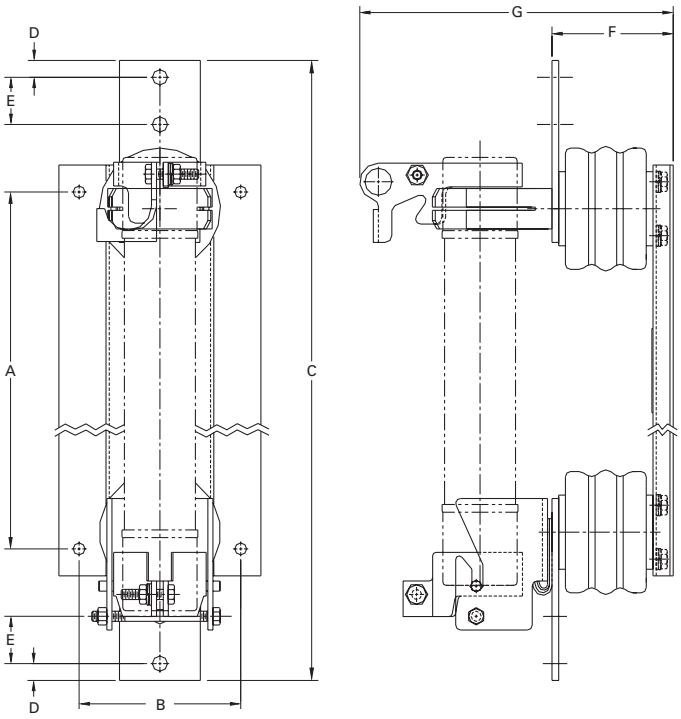

CLE and HLE type non-disconnect mounting

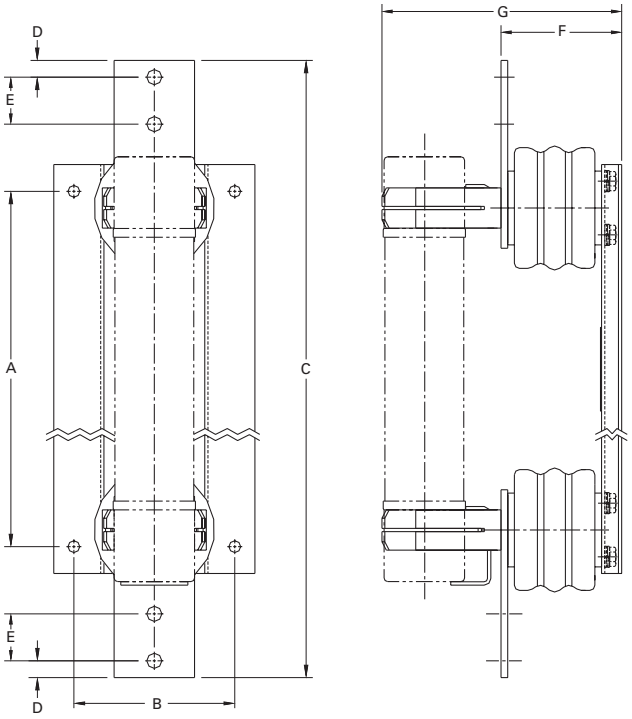

† Disconnect mountings provide a means for fuse extraction only. Do not use a disconnect mounting for load switching or fuse removal while energized.

E-Rated medium voltage specialty mount fuses

Catalog symbols:

- _AHLE-_E (for Eaton AMPGARD motor starting assemblies)
- _BHLE-_E/_BHCL-_E (bolt-on version)
- _HCL-_E (clip-lock version)

Ratings*:

- Volts
  - 5.5kV
- Amps
  - 10 to 900A
- Interrupting ratings
  - 31 to 63kA RMS Sym

* See catalog number tables for voltages, ampacities and interrupting ratings by catalog number.

Agency information:

- E-Rated fuses meet the performance characteristics of ANSI C37.46

Recommended live parts for clip-lock fuses

- Catalog number HCL-NL-1

Dimensions - in (mm)

BHLE bolt-on

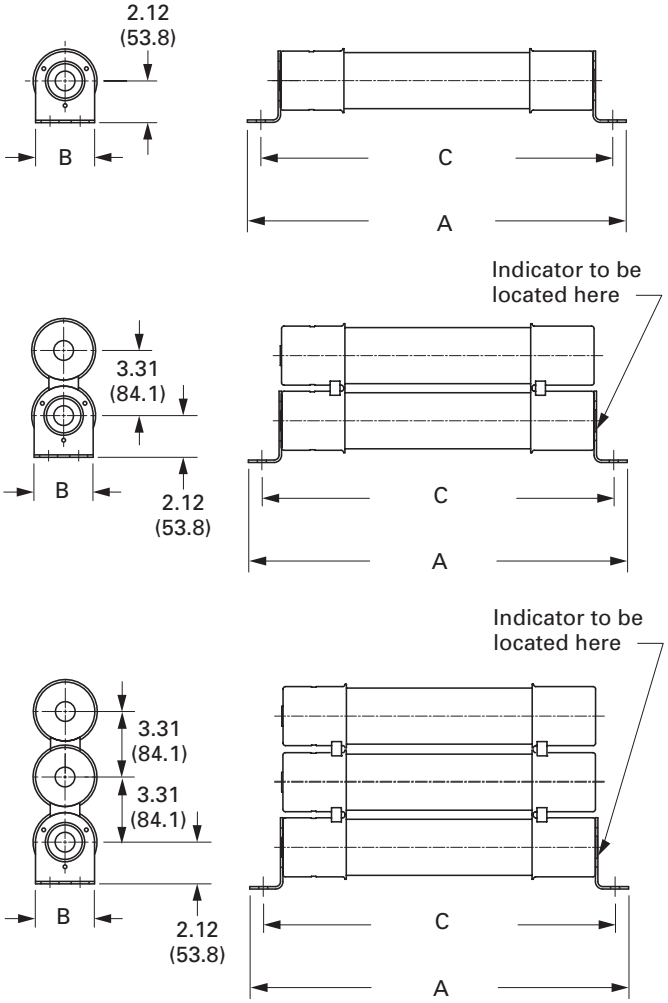

HCL clip-lock

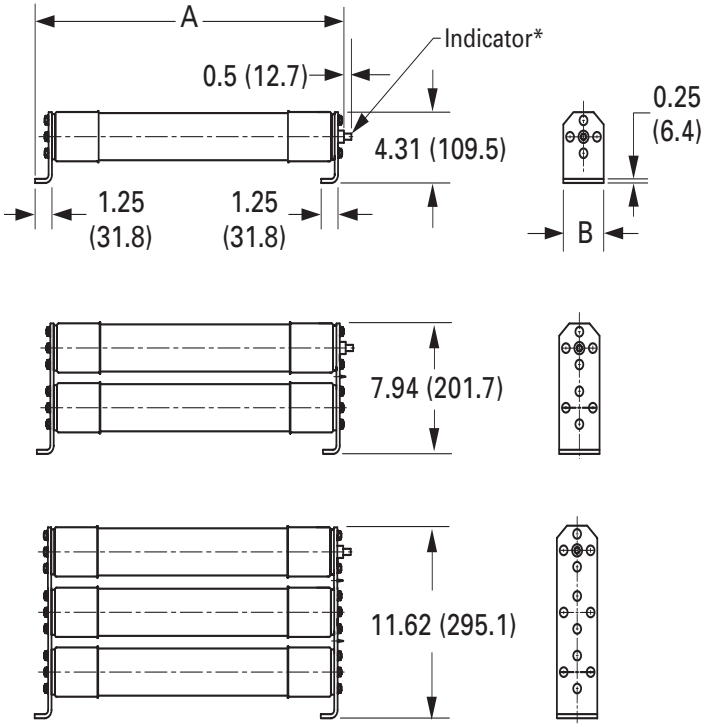

CLE four barrel bolt-on

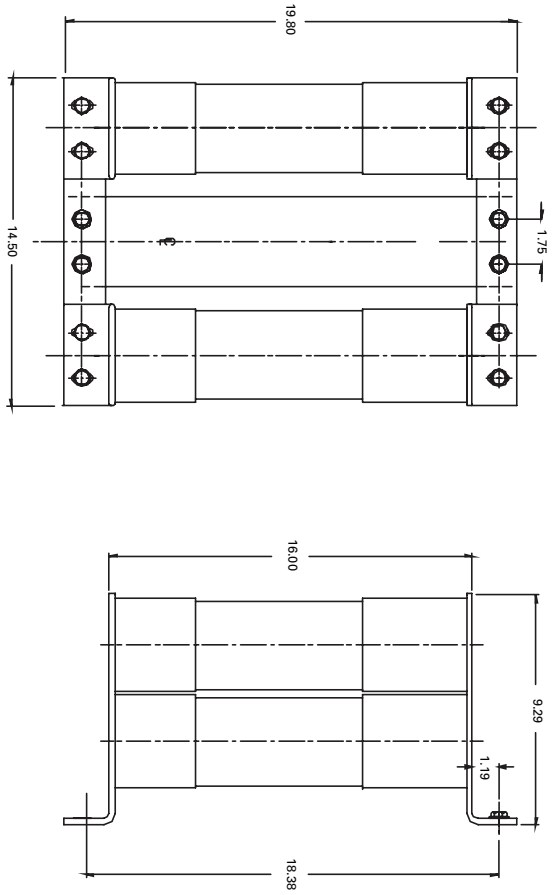

AHLE for Eaton AMPGARD motor starting assemblies

Amp rating	Interrupting rating kA (RMS Sym.)	Number of barrels	Catalog number
10	63	1	5AHLE-10E
15	63	1	5AHLE-15E
20	63	1	5AHLE-20E
25	63	1	5AHLE-25E
30	63	1	5AHLE-30E
40	63	1	5AHLE-40E†
50	63	1	5AHLE-50E†
65	63	1	5AHLE-65E†
80	63	1	5AHLE-80E†
100	63	1	5AHLE-100E†
125	63	1	5AHLE-125E†
150	63	1	5AHLE-150E†
175	63	1	5AHLE-175E†
200	63	1	5AHLE-200E†
250	63	1	5AHLE-250E†
300	63	2	5AHLE-300E†
350	63	2	5AHLE-350E†
400	63	2	5AHLE-400E†
450	63	2	5AHLE-450E†

† UL Listed, Guide JEEG, File E240398.

HCL clip-lock versions

	Dimensions - in (mm)						
Amp rating	Overall length A	Diameter B	Hole centers C	Interrupting rating kA (RMS Sym.)	Number of barrels	Installation location	Catalog number
10	16.8 (427)	3 (76)	N/A	63	1	Indoor	5HCL-10E
15	16.8 (427)	3 (76)	N/A	63	1	Indoor	5HCL-15E
20	16.8 (427)	3 (76)	N/A	63	1	Indoor	5HCL-20E
25	16.8 (427)	3 (76)	N/A	63	1	Indoor	5HCL-25E
30	16.8 (427)	3 (76)	N/A	63	1	Indoor	5HCL-30E
40	16.8 (427)	3 (76)	N/A	63	1	Indoor	5HCL-40E†
50	16.8 (427)	3 (76)	N/A	63	1	Indoor	5HCL-50E†
65	16.8 (427)	3 (76)	N/A	63	1	Indoor	5HCL-65E†
80	16.8 (427)	3 (76)	N/A	63	1	Indoor	5HCL-80E†
100	16.8 (427)	3 (76)	N/A	63	1	Indoor	5HCL-100E†
125	16.8 (427)	3 (76)	N/A	63	1	Indoor	5HCL-125E†
150	16.8 (427)	3 (76)	N/A	63	1	Indoor	5HCL-150E†
200	22.8 (579)	3 (76)	N/A	63	1	Indoor	5HCL-200E†
250	22.8 (579)	3 (76)	N/A	63	1	Indoor	5HCL-250E†
300	22.8 (579)	3 (76)	N/A	63	2	Indoor	5HCL-300E†
400	22.8 (579)	3 (76)	N/A	63	2	Indoor	5HCL-400E†
450	22.8 (579)	3 (76)	N/A	63	2	Indoor	5HCL-450E†
500	22.8 (579)	3 (76)	N/A	63	2	Indoor	5HCL-500E
600	22.8 (579)	3 (76)	N/A	63	2	Indoor	5HCL-600E
750	22.8 (579)	3 (76)	N/A	63	3	Indoor	5HCL-750E
900	22.8 (579)	3 (76)	N/A	63	3	Indoor	5HCL-900E

† UL Listed, Guide JEEG, File E240398.

CLE, BHLE and BHCL bolt-on versions

Amp rating	Dimensions - in (mm) Overall length A	Diameter B	Hole centers C	Interrupting rating kA (RMS Sym.)	Number of barrels	Installation location	Catalog number
10	19.2 (488)	3 (76)	17.9 (455)	63	1	Indoor	5BHLE-10E
15	19.2 (488)	3 (76)	17.9 (455)	63	1	Indoor	5BHLE-15E
20	19.2 (488)	3 (76)	17.9 (455)	63	1	Indoor	5BHLE-20E
25	19.2 (488)	3 (76)	17.9 (455)	63	1	Indoor	5BHLE-25E
30	19.2 (488)	3 (76)	17.9 (455)	63	1	Indoor	5BHLE-30E
40	19.2 (488)	3 (76)	17.9 (455)	63	1	Indoor	5BHLE-40E†
50	19.2 (488)	3 (76)	17.9 (455)	63	1	Indoor	5BHLE-50E†
65	19.2 (488)	3 (76)	17.9 (455)	63	1	Indoor	5BHLE-65E†
80	19.2 (488)	3 (76)	17.9 (455)	63	1	Indoor	5BHLE-80E†
100	19.2 (488)	3 (76)	17.9 (455)	63	1	Indoor	5BHLE-100E†
125	19.2 (488)	3 (76)	17.9 (455)	63	1	Indoor	5BHLE-125E†
150	19.2 (488)	3 (76)	17.9 (455)	63	1	Indoor	5BHLE-150E†
175	19.2 (488)	3 (76)	17.9 (455)	63	1	Indoor	5BHLE-175E†
200	19.2 (488)	3 (76)	17.9 (455)	63	1	Indoor	5BHLE-200E†
200	25.1 (637)	3 (76)	23.7 (602)	63	1	Indoor	5BHCL-200E
250	19.2 (488)	3 (76)	17.9 (455)	63	1	Indoor	5BHLE-250E†
250	25.1 (637)	3 (76)	23.7 (602)	63	1	Indoor	5BHCL-250E
300	19.2 (488)	3 (76)	17.9 (455)	63	2	Indoor	5BHLE-300E†
300	25.1 (637)	3 (76)	23.7 (602)	63	2	Indoor	5BHCL-300E
350	19.2 (488)	3 (76)	17.9 (455)	63	2	Indoor	5BHLE-350E†
400	19.2 (488)	3 (76)	17.9 (455)	63	2	Indoor	5BHLE-400E†
400	25.1 (637)	3 (76)	23.7 (602)	63	2	Indoor	5BHCL-400E
450	19.2 (488)	3 (76)	17.9 (455)	63	2	Indoor	5BHLE-450E†
450	25.1 (637)	3 (76)	23.7 (602)	63	2	Indoor	5BHCL-450E
500	25.1 (637)	3 (76)	23.7 (602)	63	2	Indoor	5BHCL-500E
600	25.1 (637)	3 (76)	23.7 (602)	63	2	Indoor	5BHCL-600E
600	28.9 (734)	4 (102)	18.4 (467)	40	2	Indoor	5CLE-600E
750	25.1 (637)	3 (76)	23.7 (602)	63	3	Indoor	5BHCL-750E
750	28.9 (734)	4 (102)	18.4 (467)	40	2	Indoor	5CLE-750E
900	25.1 (637)	3 (76)	23.7 (602)	63	3	Indoor	5BHCL-900E
1100	19.8 (503)	4 (102)	18.4 (467)	31	4	Indoor	5CLE-1100E
1350	19.8 (503)	4 (102)	18.4 (467)	31	4	Indoor	5CLE-1350E

† UL Listed, Guide JEEG, File E240398.

5.5kV time-current curves — minimum melt for 5CLE-_E and 5CLE-_-D

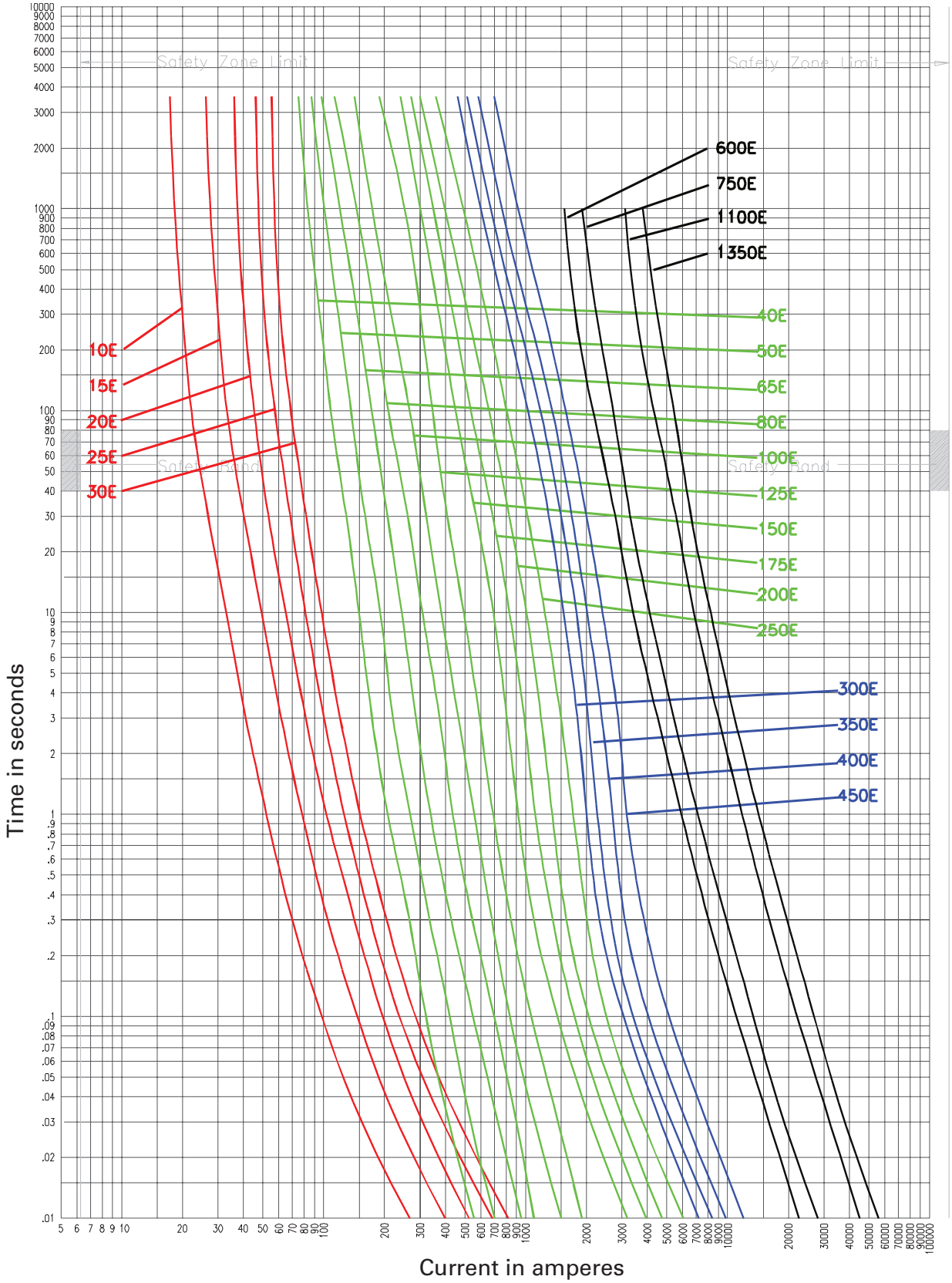

5CLE-_	Curve 70548501 April 16, 1999 Reference # 563532	Curve 70545801 April 16, 1999 Reference # 705458	Curve 70546001 April 20, 1999 Reference # 705460	Curve 62908902 April 1999 Reference # 629089

5.5kV time-current curves — total clear for 5CLE-_E and 5CLE-_-D

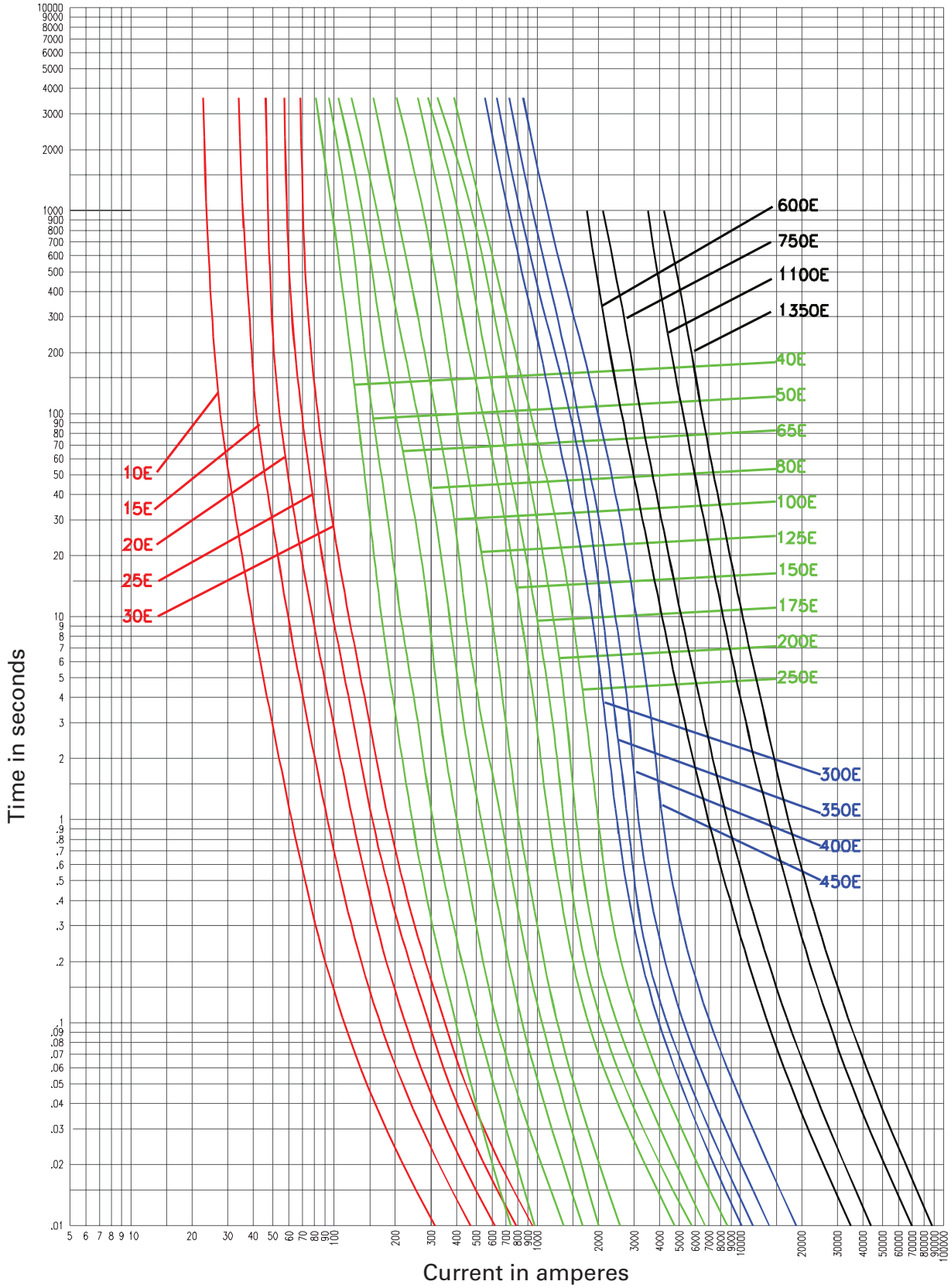

5CLE-_

Curve 70548702
April 16, 1999
Reference # 563533

Curve 70545901
April 20, 1999
Reference # 705459

Curve 70546101
April 20, 1999
Reference # 705461

Curve 62908903
April 1999
Reference # 629089

5.5kV peak let-through for 5CLE-_E and 5CLE-_-D

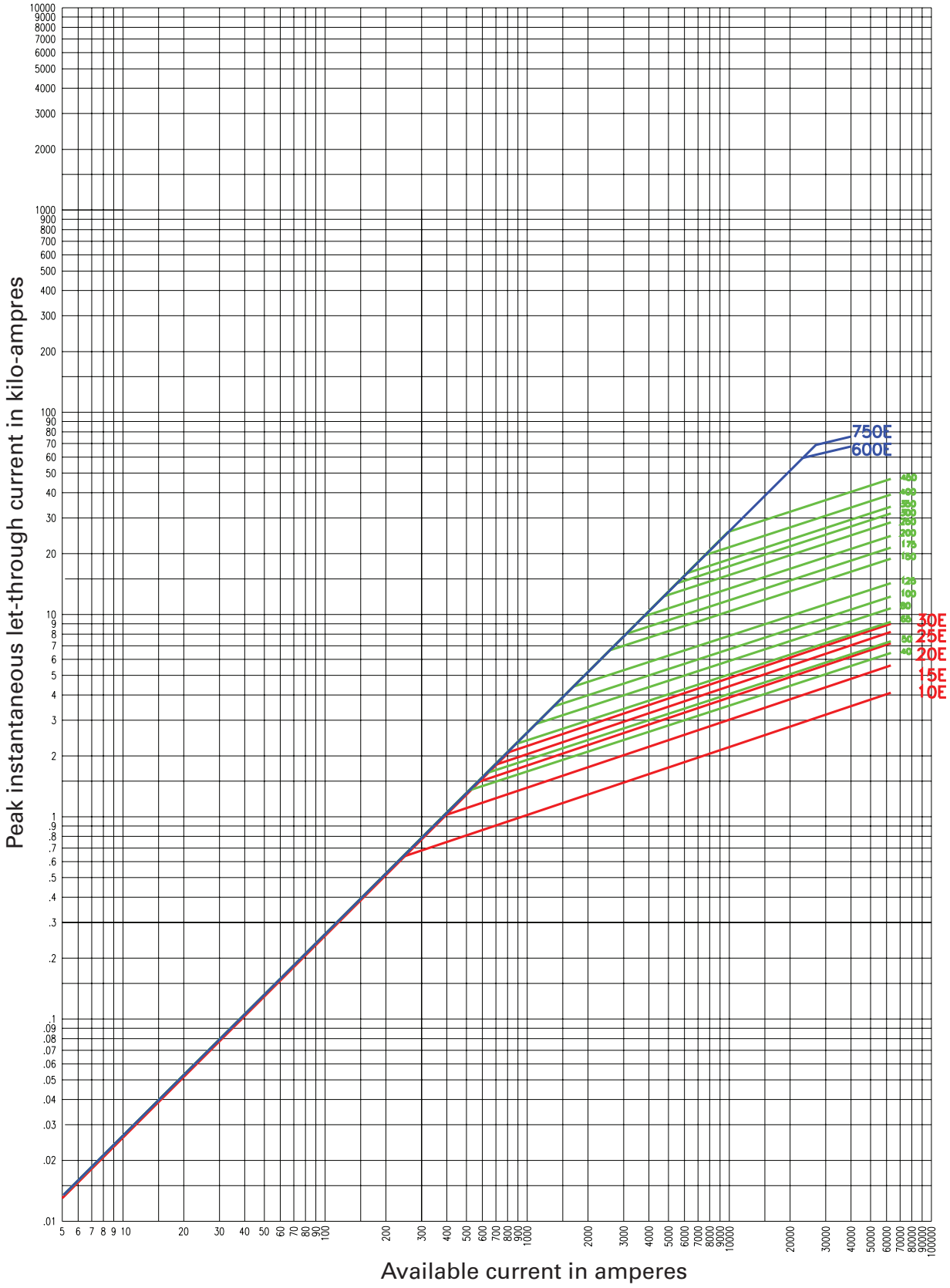

5CLE-_

Curve 70548701
April 1999
Reference # 705487

Curve 70547601
April 1999
Reference # 705476

Curve 62908904
April 1999
Reference # 629089

5.5kV time-current curves — minimum melt for 5HLE-_E, 5AHLE-_E and 5BHLE-_E

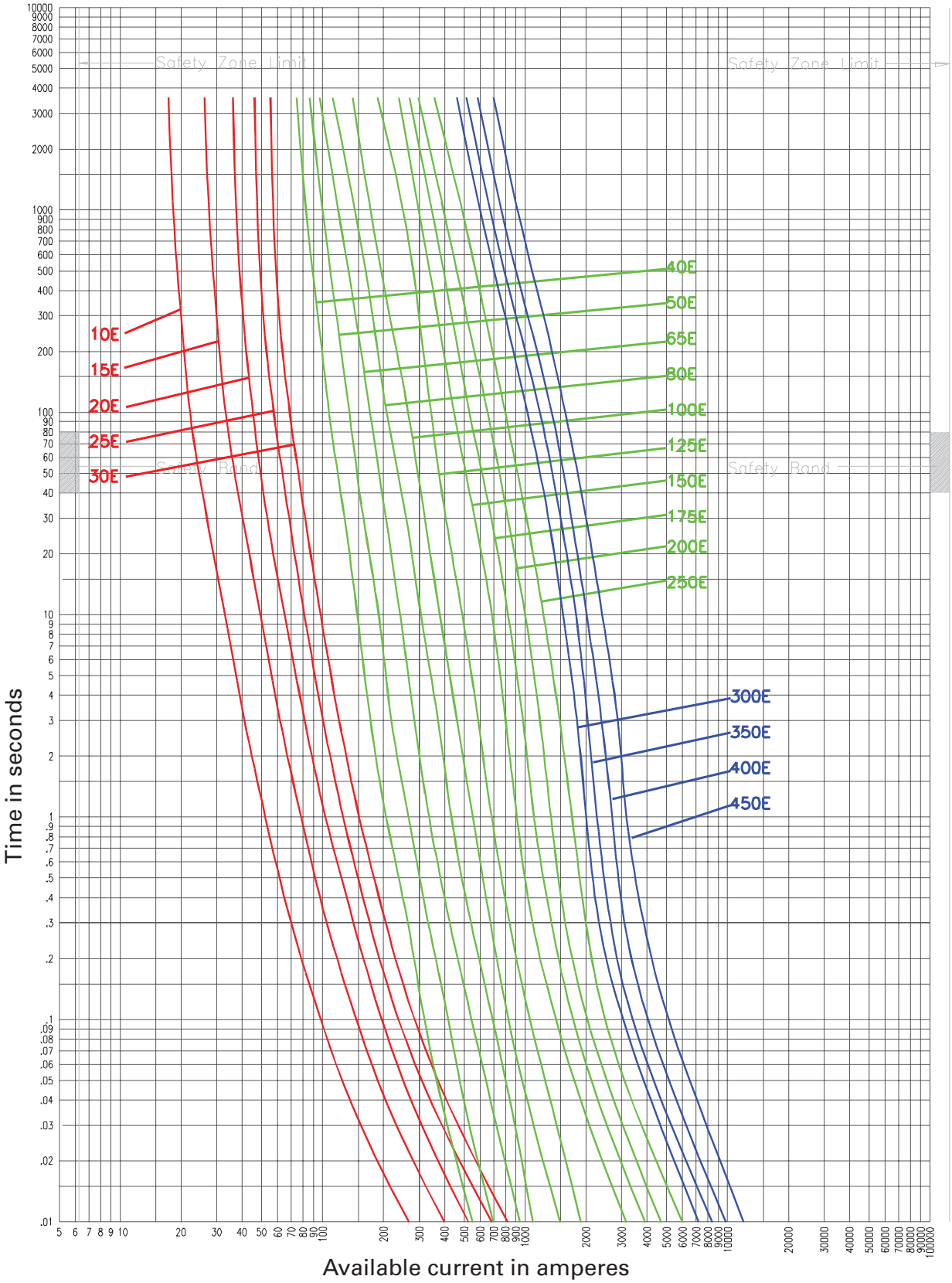

5HLE-_, 5BHLE-_, 5AHLE-_

Curve 70548507
April 16, 1999
Reference # 563532

Curve 70545805
April 16, 1999
Reference # 705458

Curve 70546005
April 20, 1999
Reference # 705460

5.5kV time-current curves — total clear for 5HLE-_E, 5AHLE-_E and 5BHLE-_E

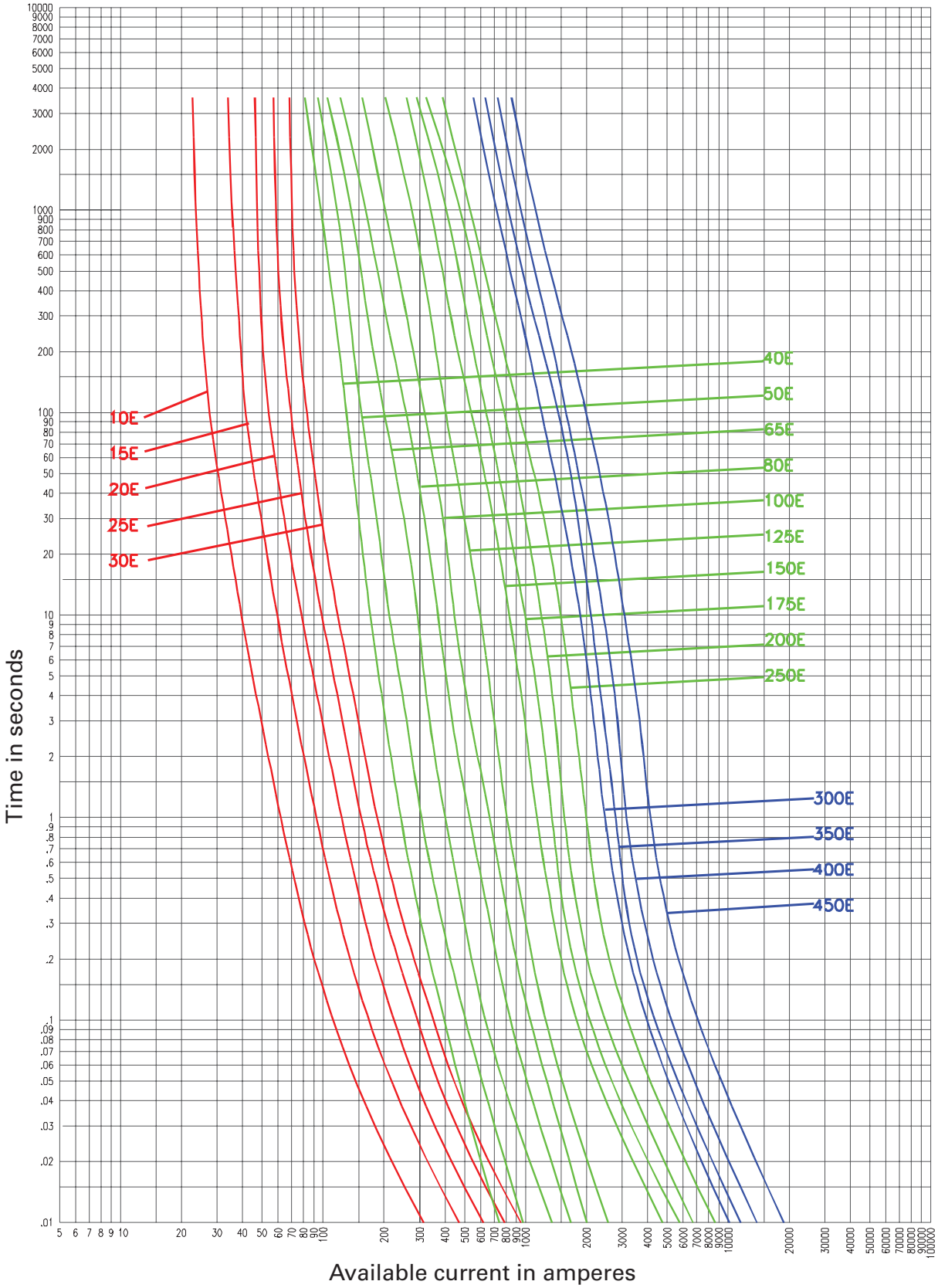

5HLE-_, 5BHLE-_, 5AHLE-_

Curve 70548607
April 16, 1999
Reference # 563533

Curve 70545905
April 20, 1999
Reference # 705459

Curve 70546105
April 20, 1999
Reference # 705461

5.5kV peak let-through for 5HLE-_E, 5AHLE-_E and 5BHLE-_E

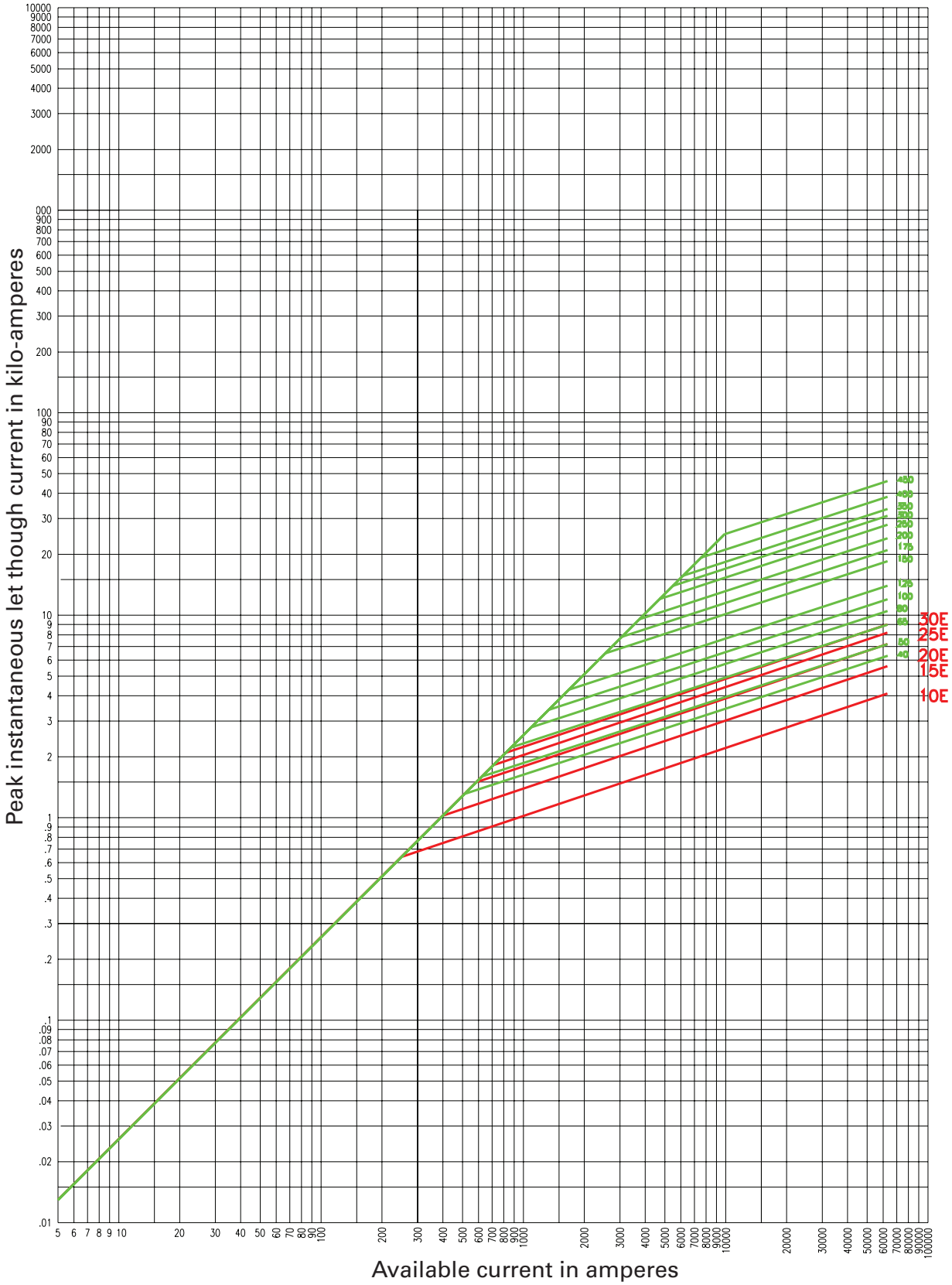

5HLE-_, 5BHLE-_, 5AHLE-_

Curve 70548703
April 1999
Reference # 705487

Curve 70547603
April 1999
Reference # 705476

5.5kV time-current curves — minimum melt for 5HCL-_E

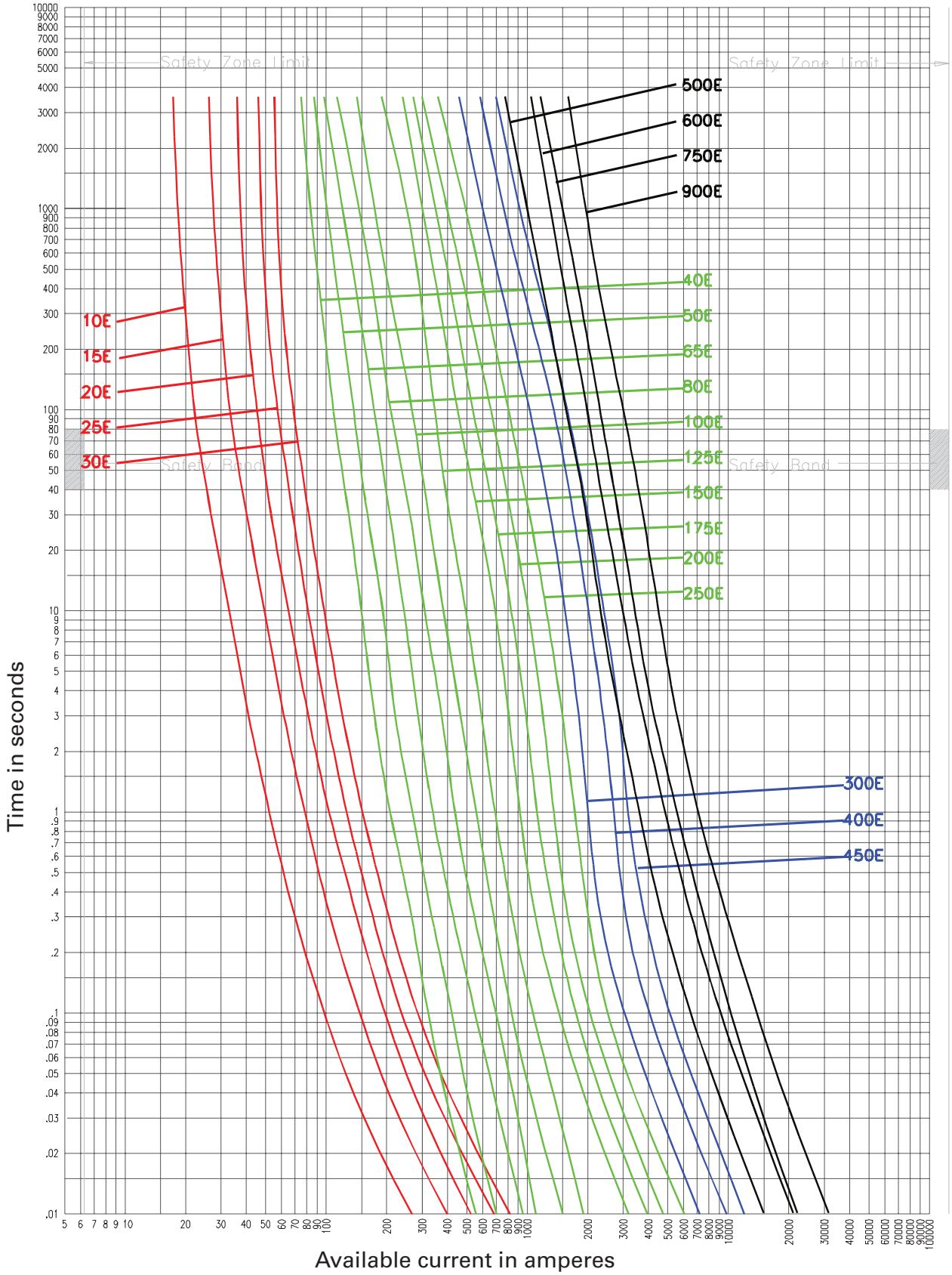

5HCL-_

Curve 70548505	Curve 70545803	Curve 70546003	Curve 66703401
Janaury 2001	January 2001	April 2001	Janaury 2001

5.5kV time-current curves — total clear for 5HCL-_E

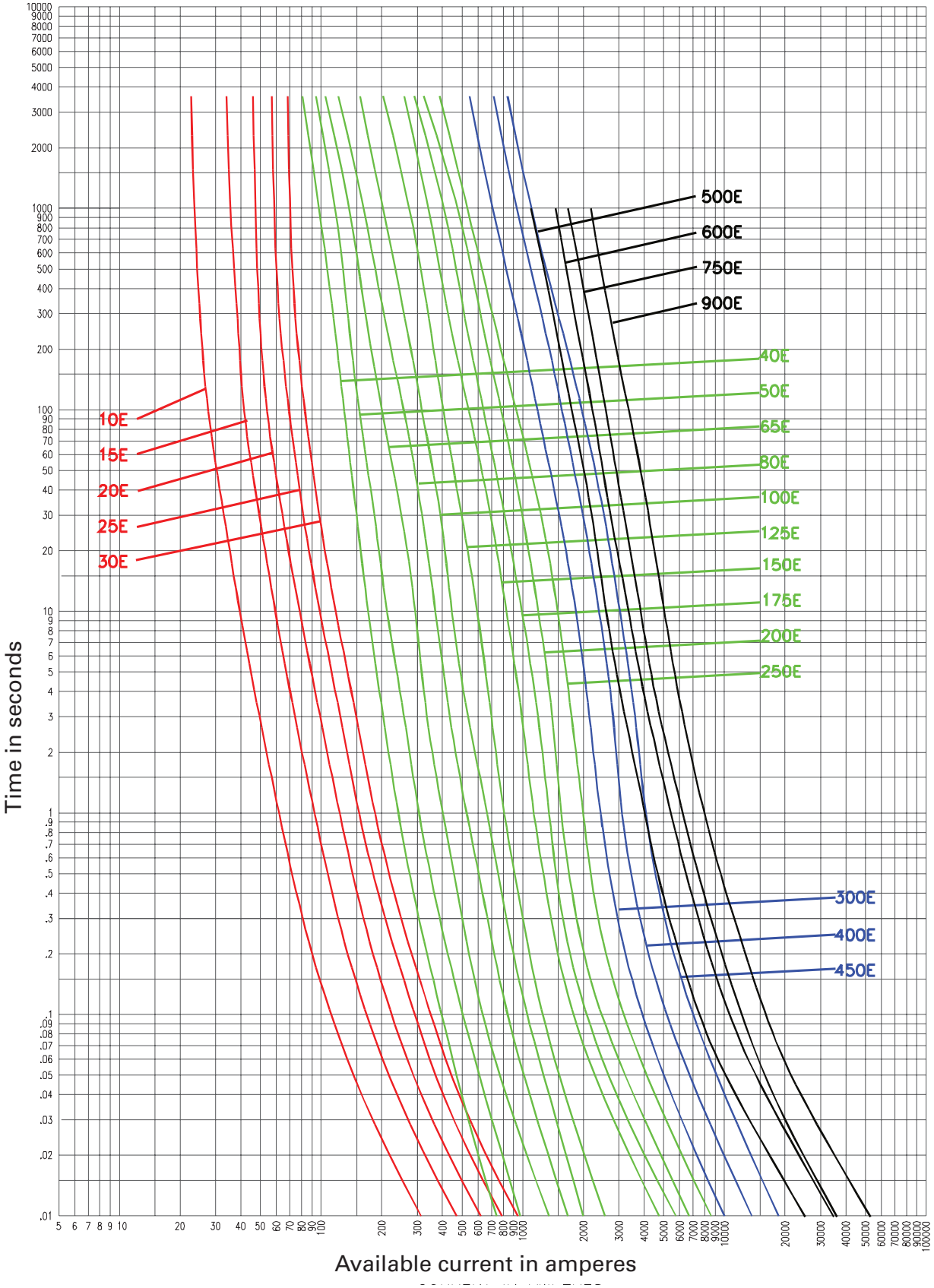

5HCL-_

Curve 70548605
Janaury 2001

Curve 70545903
Janaury 2001

Curve 70516103
Janaury 2001

Curve 66703501
Janaury 2001

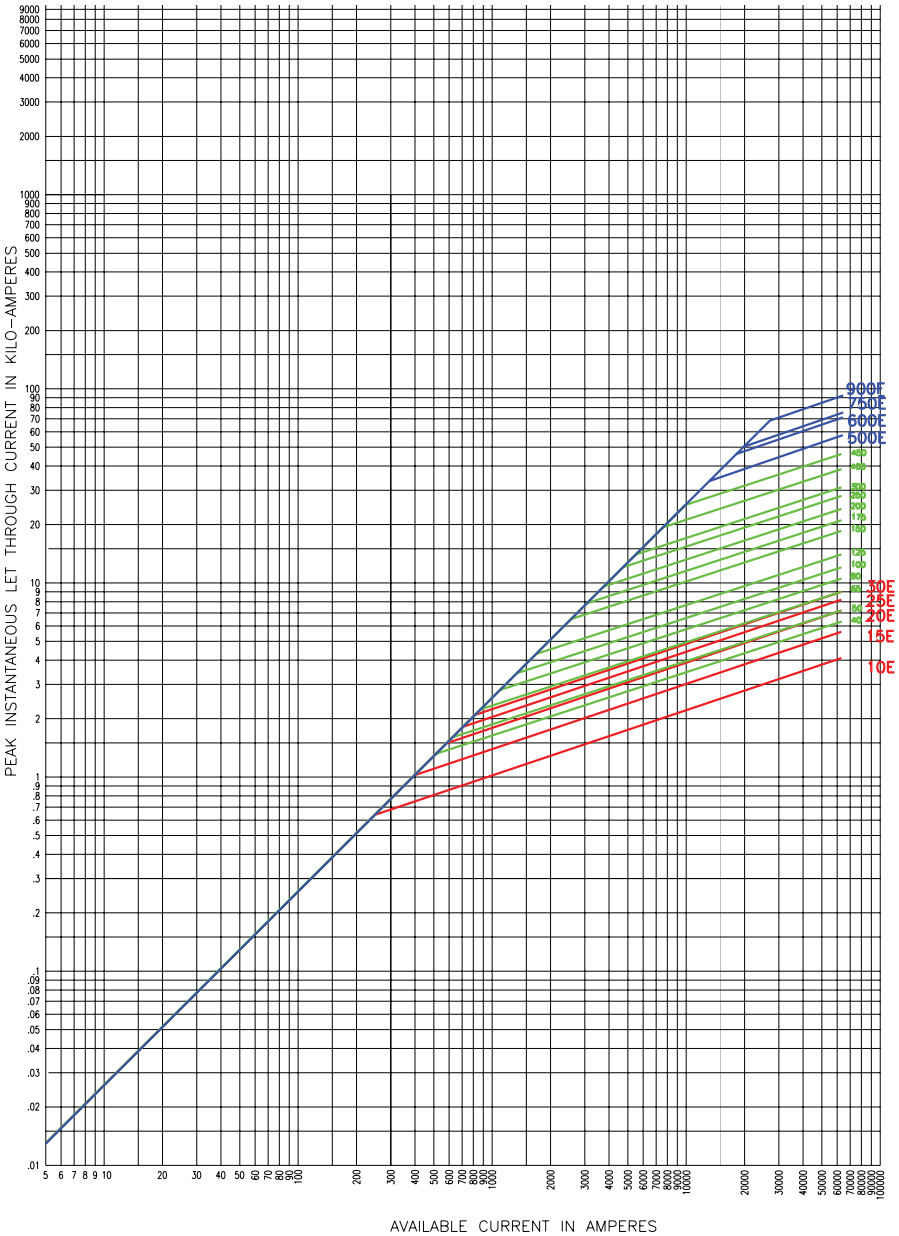

5HCL-_

Curve 70548702
January 2001

Curve 70547602
January 2001

Curve 66703701
January 2001

The only controlled copy of this data sheet is the electronic read-only version located on the Eaton network drive. All other copies of this document are by definition uncontrolled. This bulletin is intended to clearly present comprehensive product data and provide technical information that will help the end user with design applications. Eaton reserves the right, without notice, to change design or construction of any products and to discontinue or limit distribution of any products. Eaton also reserves the right to change or update, without notice, any technical information contained in this bulletin. Once a product has been selected, it should be tested by the user in all possible applications.

Eaton
1000 Eaton Boulevard
Cleveland, OH 44122
United States
Eaton.com

Bussmann Division
114 Old State Road
Ellisville, MO 63021
United States
Eaton.com/bussmannseries

For Eaton's Bussmann series product information, call **1-855-287-7626** or visit: **Eaton.com/bussmannseries**

Powering Business Worldwide

© 2016 Eaton
All Rights Reserved
Printed in USA
Publication No. 10351 - BU-SB15151
April 2016

Eaton, Bussmann and AMPGARD are valuable trademarks of Eaton in the US and other countries. You are not permitted to use the Eaton trademarks without prior written consent of Eaton.

Follow us on social media to get the latest product and support information.

OCEAN CHIPS
Океан Электроники
Поставка электронных компонентов

Компания «Океан Электроники» предлагает заключение долгосрочных отношений при поставках импортных электронных компонентов на взаимовыгодных условиях!

Наши преимущества:

- Поставка оригинальных импортных электронных компонентов напрямую с производств Америки, Европы и Азии, а так же с крупнейших складов мира;
- Широкая линейка поставок активных и пассивных импортных электронных компонентов (более 30 млн. наименований);
- Поставка сложных, дефицитных, либо снятых с производства позиций;
- Оперативные сроки поставки под заказ (от 5 рабочих дней);
- Экспресс доставка в любую точку России;
- Помощь Конструкторского Отдела и консультации квалифицированных инженеров;
- Техническая поддержка проекта, помощь в подборе аналогов, поставка прототипов;
- Поставка электронных компонентов под контролем ВП;
- Система менеджмента качества сертифицирована по Международному стандарту ISO 9001;
- При необходимости вся продукция военного и аэрокосмического назначения проходит испытания и сертификацию в лаборатории (по согласованию с заказчиком);
- Поставка специализированных компонентов военного и аэрокосмического уровня качества (Xilinx, Altera, Analog Devices, Intersil, Interpoint, Microsemi, Actel, Aeroflex, Peregrine, VPT, Syfer, Eurofarad, Texas Instruments, MS Kennedy, Miteq, Cobham, E2V, MA-COM, Hittite, Mini-Circuits, General Dynamics и др.);

Компания «Океан Электроники» является официальным дистрибьютором и эксклюзивным представителем в России одного из крупнейших производителей разъемов военного и аэрокосмического назначения **«JONHON»**, а так же официальным дистрибьютором и эксклюзивным представителем в России производителя высокотехнологичных и надежных решений для передачи СВЧ сигналов **«FORSTAR»**.

AVIC JONHON

«JONHON» (основан в 1970 г.)

Разъемы специального, военного и аэрокосмического назначения:

(Применяются в военной, авиационной, аэрокосмической, морской, железнодорожной, горно- и нефтедобывающей отраслях промышленности)

«FORSTAR» (основан в 1998 г.)

ВЧ соединители, коаксиальные кабели, кабельные сборки и микроволновые компоненты:

(Применяются в телекоммуникациях гражданского и специального назначения, в средствах связи, РЛС, а так же военной, авиационной и аэрокосмической отраслях промышленности).

FORSTAR®

Телефон: 8 (812) 309-75-97 (многоканальный)
Факс: 8 (812) 320-03-32
Электронная почта: ocean@oceanchips.ru
Web: http://oceanchips.ru/
Адрес: 198099, г. Санкт-Петербург, ул. Калинина, д. 2, корп. 4, лит. А