LED Driver/Monitor

AD8240

FEATURES

PWM input for LED brightness control
Open LED detection
Latch-off overcurrent protection
Constant voltage regulated output
Supply range: 9 V to 27 V
Regulated voltage range: 12.5 V to 27 V
Operating current: 300 µA
Shutdown current: 10 µA
Temperature range –40°C to +125°C
8-lead MSOP package

GENERAL DESCRIPTION

The AD8240 LED driver/monitor, in combination with an external transistor, supplies a constant 12 V to drive LED lamps. This allows cost-effective LED lamp monitoring and short-circuit protection. The output is regulated at 12 V when the supply voltage is between 12.5 V and 27 V.

A CMOS compatible, level-dependent, digital input can be used for PWM control of the LED brightness. V_O is turned on when the PWM input is high and turned off when the input is low. The AD8240 is designed to work with a PWM frequency up to 500 Hz, and a typical PWM range from 5% to 95%.

Open LED detection is accomplished by measuring the change in LED lamp current caused by an open LED(s) through the use of an internal high-side current-sense amplifier that amplifies the voltage across an external current shunt. The voltage across the shunt resistor is amplified to a level that can be measured by a microcontroller A/D converter or a comparator. The ability to measure the change in LED lamp current is the key benefit of constant-voltage LED lamp driving.

The output is current-limited by latching off the output voltage when the current reaches a preset level. The current limit is set by selecting the value of the external current shunt that causes the output of the sense amplifier to slightly exceed the 5 V reference level when the current exceeds a maximum level. When the sense amplifier output exceeds 5 V, it trips an internal comparator that causes the driver to latch off the output voltage. The latch is reset during the next PWM cycle. The overcurrent condition can also be detected by a microcontroller or external comparator by measuring the sense amplifier output.

FUNCTIONAL BLOCK DIAGRAM

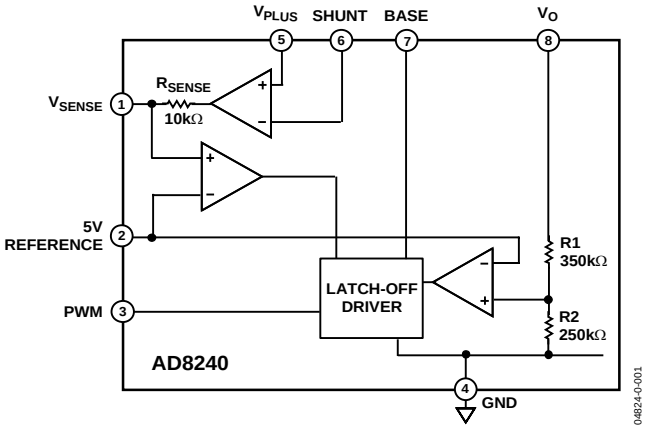

Figure 1.

PRODUCT HIGHLIGHTS

1. Partial LED lamp failure detection.
   Allows for compliance with automotive regulations for turn signal functionality detection and minimum brightness, as well as running/brake light minimum brightness compliance.
2. Current limiting/latch-off protection.
   Limiting and latching off the LED current protects vehicle wiring and prevents lamp damage
3. PWM input.
   Provides brightness control.
4. Constant voltage output.
   Saves cost by minimizing wiring and system design complexity.
5. Drives an external transistor for low power operation.
   Providing for an external power transistor allows the AD8240 to be a low cost solution in a small package. A more efficient design is made possible when the system designer can select a power device with specifications that match the application requirements.
6. Linear regulation.
   Minimizes EMI, which allows faster system integration, qualification, and time to market. Additionally, costs are reduced by eliminating the inductor required for a switching design. Because of the power-saving nature of LED lamps as compared to incandescent lamps, a switching driver is typically not required.

Rev. 0
Information furnished by Analog Devices is believed to be accurate and reliable. However, no responsibility is assumed by Analog Devices for its use, nor for any infringements of patents or other rights of third parties that may result from its use. Specifications subject to change without notice. No license is granted by implication or otherwise under any patent or patent rights of Analog Devices. Trademarks and registered trademarks are the property of their respective owners.

One Technology Way, P.O. Box 9106, Norwood, MA 02062-9106, U.S.A.
Tel: 781.329.4700 **www.analog.com**
Fax: 781.326.8703
© 2004 Analog Devices, Inc. All rights reserved.

TABLE OF CONTENTS

Specifications 3

Absolute Maximum Ratings 4

Product Description 5

- Linear Regulator (Block A) 5
- High-Side Current-Sense Amplifier with Open LED Detection (Block B) 5
- Comparator with Latch-off OverCurrent Protection (Block C) 5
- Intelligent Driver (Block D) 5

Using/Evaluating the AD8240 LED Driver Monitor 6

- Setup 6
- Controlling the LED lamp 7
- Using/Evaluating the V_{Sense} Output 7

Advantages of Driving LED Lamps with Constant Voltage 8

- Background 8
- Monitoring the LEDs 8
- Driving Automotive LEDs 8

Outline Dimensions 10

- Ordering Guide 11

REVISION HISTORY

4/04—Revision 0: Initial Version

SPECIFICATIONS

T_A = operating temperature range, V_{PLUS} = 13.5 V, unless otherwise noted.

Table 1.

Parameter	Conditions	Min	Typ	Max	Unit
V_O	5 V Reference = 5 V		12		V
V_O Regulation[1] at 25°C	V_{PLUS} = 13 V to 27 V	−3	±1	+3	%
V_O Regulation[2] -40°C to 125°C	V_{PLUS} = 13 V to 27 V	−6	±2	+6	%
I_{OUT}[3]	R_{SHUNT} = 0.4 Ω		500		mA
V_O Rise Time	I_{OUT} = 250 mA, C_M = 22 nF, CL = 47 nF		12		µs
V_{SENSE} Gain			24		
V_{SENSE} Accuracy		−7	±3	+7	%
V_{SENSE} Output Impedance		8	10	12	kΩ
Base Drive		15			mA
PWM Turn-On Threshold		3.5			V
PWM Turn-Off Threshold				1.4	V
V_{SENSE} Latch-Off Threshold[4]		0	0.1	0.3	V
Latch-Off Delay[5]			2		µs
PWM Frequency Range		DC		500	Hz
C_M		22			nF
C_{LOAD} Range	CL = 47 nF	−30		+30	%
Operating Current[6]	V_{PLUS} > 13 V			360	µA
V_{PLUS} Operating Range		9		27	V
Shutdown Current	PWM low			10	µA
5 V Reference Current		160	200	240	µA
Operating Temperature Range		−40		+125	°C

[1] V_O = 12/5 of the applied reference voltage ±1% typical. Minimum V_{PLUS} voltage for regulation depends on the external transistor V_{be} and the shunt voltage.
[2] V_O = 12/5 of the applied reference voltage ±2% typical. Minimum V_{PLUS} voltage for regulation depends on the external transistor V_{be} and the shunt voltage.
[3] The maximum output current level is set by the selection of the current shunt and power transistor.
[4] (V_{SENSE} − 5 V Reference) The latch-off level is determined by the output level of the sense amplifier. When the amplifier output approaches 5 V, the output is latched off. This allows the maximum current output level to be determined by the shunt resistor value. Latch-off can be restored to on by cycling the PWM input off and back on.
[5] Internal delay only. The external delay depends on the external capacitor values, LED string impedance, and wiring inductance.
[6] This specifies V_{PLUS} only—ground current includes external transistor base drive.

ABSOLUTE MAXIMUM RATINGS

Table 2.

Parameters	Rating
Supply Voltage, Continuous	27 V
Supply Voltage, Transient	30 V
Reverse Supply Protection	−0.3 V
Operating Temperature	125°C
Storage Temperature	−65°C to +150°C
Output Short-Circuit Duration[1]	Indefinite

[1] Output short circuits result in a latch-off condition.

Stresses above those listed under Absolute Maximum Ratings may cause permanent damage to the device. This is a stress rating only; functional operation of the device at these or any other conditions above those indicated in the operational section of this specification is not implied. Exposure to absolute maximum rating conditions for extended periods may affect device reliability.

ESD CAUTION

ESD (electrostatic discharge) sensitive device. Electrostatic charges as high as 4000 V readily accumulate on the human body and test equipment and can discharge without detection. Although this product features proprietary ESD protection circuitry, permanent damage may occur on devices subjected to high energy electrostatic discharges. Therefore, proper ESD precautions are recommended to avoid performance degradation or loss of functionality.

PRODUCT DESCRIPTION

The AD8240 consists of four functional blocks labeled A through D, as shown in Figure 2.

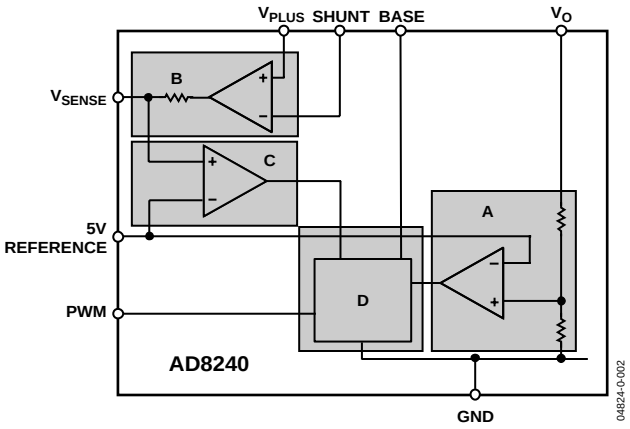

Figure 2. Simplified Functional Block Diagram

Table 3 briefly describes the blocks, while the sections that follow provide more detailed information.

Table 3.

Block	Description
A	Linear regulator
B	High-side current-sense amplifier
C	Comparator
D	Driver

LINEAR REGULATOR (BLOCK A)

The simplified architecture of the linear regulator block is an amplifier and resistor divider. One input to the amplifier is tied to the 5 V reference. The other input is tied to a resistor divider that sets the ratio of the 5 V reference to V_O. As a result, the accuracy of the voltage output is proportional to the accuracy of the 5 V reference. For example, if the 5 V reference is 5% high (5.25 V), the output is 5% high (12.6 V).

HIGH-SIDE CURRENT-SENSE AMPLIFIER WITH OPEN LED DETECTION (BLOCK B)

This amplifier is used to measure the LED current by amplifying the voltage across a user-selected shunt resistor. It has a gain of 24 and an overall accuracy of 5%. The output of the amplifier is typically connected to a microcontroller A/D converter input so that the condition of the LED lamp can be determined. This output can also be tied to other devices such as a latching comparator or output buffer. It is important to note that the output of this amplifier has a relatively high impedance of approximately 10 kΩ. As a result, a buffer amplifier should be used if the load is less than 100 kΩ.

COMPARATOR WITH LATCH-OFF OVERCURRENT PROTECTION (BLOCK C)

This block is used to shut down the output in the case of a short circuit or an overcurrent condition. When the output of the high-side current-sense amplifier approaches 5 V, the comparator output switches, causing the driver to latch off the output voltage.

INTELLIGENT DRIVER (BLOCK D)

The intelligent driver provides multiple functions:

- Level shifts and conditions the output of the regulator amplifier to drive an external user-selected power transistor.
- Accepts PWM input so that LED brightness can be controlled by a user-supplied PWM signal.
- The PWM input can also be used as a simple on/off control for applications that do not require variable brightness.
- Latch-off input that latches the output off when the comparator trips during an overcurrent event. The latch is reset by cycling the PWM input.

USING/EVALUATING THE AD8240 LED DRIVER MONITOR

Figure 3 shows a connection diagram for a typical application.

SETUP

In order to set up and evaluate the AD8240, the following components and equipment are needed:

- A shunt resistor (typically 0.1 Ω to 0.5 Ω depending on the load). See the Shunt Resistor Selection section.
- A transistor (the type depends on the load)
- Two capacitors
- LED load
- 5 V reference voltage
- 9 V to 27 V supply
- Oscilloscope
- Digital voltmeter (DVM)

Shunt Resistor Selection

The shunt resistor is chosen by the equation

$$R_{SHUNT} \leq 0.2\,\text{V}/I_{LOAD}$$

For example if the load is expected to be 500 mA, the shunt value should be equal to or less than 0.4 Ω. This keeps the output of the current sense amplifier from being greater than 4.8 V in normal operation to prevent noise from causing the output to latch off.

Circuit Configuration

Connect the pass transistor, capacitors, and LED load(s) as shown in Figure 3. It is important to note that the value of C_M should be at least 22 nF to ensure circuit stability.

The LED lamp should be configured to expect 12 V. This is the result of selecting the series/parallel combinations of LEDs and series resistors. The series resistors can be used to adjust for LED supplier brightness variations from lot to lot.

Connect 5 V to Pin 2 (5 V reference) and at least 9 V to Pin 5 (V_{PLUS}). It may be necessary to raise the V_{PLUS} voltage to more than 13 V, depending on the drop across the pass transistor, for the output to be regulated at 12 V. This varies according to the application and the pass transistor type.

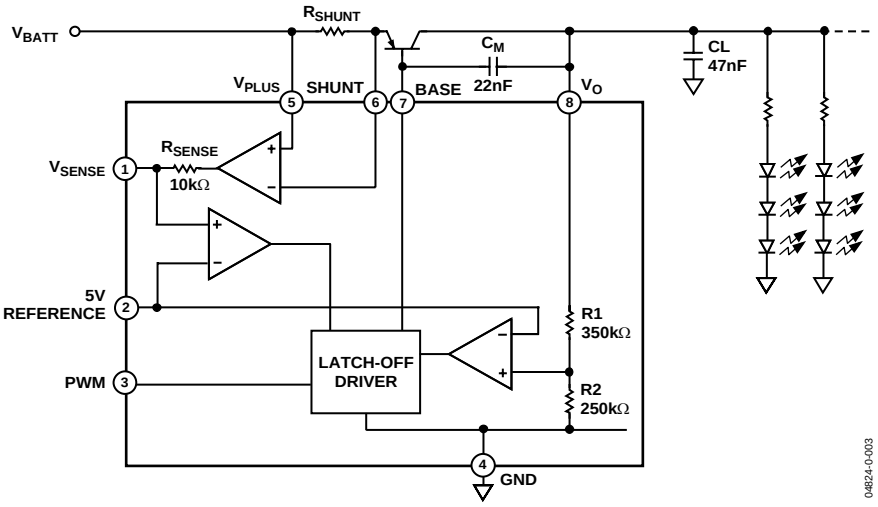

Figure 3. Connections for Typical Applications

CONTROLLING THE LED LAMP

The LEDs are turned on and off depending on the CMOS compatible digital voltage level present at the PWM pin (Pin 3). This voltage can be continuous for a simple on/off function, or PWM for dimming control. The PWM frequency should be less than 500 Hz with a range from 5% to 100%. Typical values are 5% for running and 95% for braking.

USING/EVALUATING THE V_{SENSE} OUTPUT

Important: The output impedance of V_{SENSE} is approximately 10 kΩ. Because of this, it may be necessary to buffer the output in order to drive a load of less than 100 kΩ. An oscilloscope, micro-controller A/D converter, or DVM may be used to accurately measure the voltage at the V_{SENSE} pin.

The V_{SENSE} output is used to detect a partial LED failure, or an overcurrent condition. The voltage present at V_{SENSE} is proportional to the current through the load with the equation

$$I_{LOAD} = (V_{SENSE}/24)/R_{SHUNT}$$

Selection of the shunt resistor can be found by manipulating this equation. For example

$$V_{SENSE} = I_{LOAD} \times R_{SHUNT}$$

$$Expected\ Load = 500\ \text{mA}$$

$$R_{SHUNT} = 0.4\ \Omega$$

To determine if the load is correct, the voltage at V_{SENSE} should be as follows during full power operation:

$$500\ \text{mA} \times 0.4\ \Omega \times 24\ \text{V/V} = 4.8\ \text{V}$$

If there is a partial LED failure, V_{SENSE} drops in proportion to the quantity of the failure. For example, if 25% of the LEDs fail, the voltage drops by 25%.

If there is a short to ground, V_{SENSE} is near 0 V because the output is latched off and no current is flowing.

Using/Evaluating the Short-Circuit Protection Feature

If there is a short or an overload condition, the voltage at V_{SENSE} falls close to zero, and the output shuts down (the transistor driver shuts off). This resets when the PWM voltage is brought low and then high again. If the condition persists, the AD8240 attempts to drive the output to 12 V and then immediately shuts down. If a PWM voltage is used, the AD8240 attempts to start after each PWM cycle.

This can be simulated by increasing the load so the voltage at V_{SENSE} slightly exceeds 5 V. When this happens, the output shuts down, and the V_{SENSE} voltage is close to 0 V.

ADVANTAGES OF DRIVING LED LAMPS WITH CONSTANT VOLTAGE

The advantages of driving LED lamps with constant voltage are

- Low system cost
- Accurate monitoring
- Proven strategy

BACKGROUND

A great variety of LED lamps are being used in automotive applications. The most popular application is center brake lamps. Currently, many manufacturers are developing technology to use LEDs for left/right brake lamps, running lamps, and turn signals. There are also plans to use high power LEDs for forward lighting fog lamps and low beams.

There are two fundamental types of LEDs used in these applications. The first is the low power bright LED. The second type is the high power, extremely bright LED in the 1 W to 10 W range.

While the following information can be applied to applications using the high power LED, or incandescent lamps, the constant voltage method is designed for applications typically using the low power bright LEDs. This type of LED is used in arrays that form LED lamps.

MONITORING THE LEDS

In addition to driving the LED lamp, the electronics in the control module must include a method for monitoring partial LED failure in the lamp. Certain factors, such as overdriving and mechanical stress, can cause LED failures.

Auto manufacturers are using LED lamps as a way to differentiate themselves and give a car a unique appearance. Several failed LEDs in the lamp would ruin the aesthetics of the lamp. As a result, manufacturers are demanding the ability to monitor the LED lamps for partial failure.

In addition to monitoring the LEDs for aesthetic reasons, monitoring must also be included as a result of automotive regulations. These regulations specify the minimum light output of external lamps. For example, if half of the LEDs in a particular lamp failed, the lamp would still operate, but the light output would be insufficient to meet automotive regulations for brightness. This concern is not an issue for incandescent bulbs, because they are either completely on or completely off. The ability of the LED lamp to provide some light output in the case of partial outage, however, allows for an extra degree of safety over incandescent lamps. Additionally, there are automotive regulations requiring the monitoring of the turn signals regardless of the type of light source.

DRIVING AUTOMOTIVE LEDS

There are two different architectures for driving LEDs in left/right/center brake lamps, running lamps, and turn signals.

Constant Current

The most common method for driving LEDs is with a constant current. This current can be supplied from a constant current source or from a constant voltage source in series with a ballast resistor. Driving LEDs without some form of ballast carries some risk of premature LED failure due to thermal runaway in high temperature ambient conditions.

For example, in the simplest application, the center brake lamp is driven from a relatively constant voltage with brightness controlled by a series ballast resistor. This simple driving method has been used in a wide variety of automotive platforms for some time. With this method, the LEDs and ballast resistors are preselected for brightness as part of the manufacturing strategy.

When driving with a constant current source, LED driving and monitoring cannot be done using two or fewer wires (shared ground). Since the current is constant, it does not change with partial LED failure. Instead, the current is divided among the remaining functional LEDs, causing them to fail prematurely at an unpredictable rate. Additionally, it is not possible to detect partial failure by measuring the voltage change. The voltage does not change by a detectable amount because of the steep V/I curve exhibited by bright LEDs. When using a constant current scheme, at least one additional wire per lamp must be added to the harness to monitor partial or total LED failure. Additionally, electronic modules must be added to each lamp.

Constant Voltage

Driving LEDs with a constant voltage allows for easy, low cost detection of partial failure, an advantage not available with a constant-current architecture. This is because the current from the voltage source changes in direct proportion to the number of LEDs that have failed. This current can be measured with a low cost shunt and an amplifier back at the body control module. This detection scheme is implemented in the AD8240 LED driver/monitor through the use of a high-side, current-sensing amplifier. The current is measured on the high side in order to separate the current from those combined in the chassis ground return or shared-wire ground return.

As a result, the constant voltage driving/monitoring method is the lowest cost and least-prone-to-failure method for driving and monitoring LEDs from a system perspective. This is primarily because the number of wires and connections can be minimized. By using a constant voltage driver and measuring the current, an LED lamp can be driven *and* monitored using only two wires (power and ground). In many cases, this can be reduced to one wire when the chassis or shared ground return is used. This is a similar architecture used with incandescent bulbs, which means no changes to the wiring harness are necessary with this LED implementation.

Most automotive platforms no longer use a switch on the dashboard to directly control the incandescent lamps. These lamps are now controlled and driven by the body control ECU. By using this constant voltage architecture, the control and drive function for the LEDs can remain in the ECU with minimal design modification.

Constant voltage driving/monitoring is a proven method already in use in a number of automotive platforms to drive LED tail, running, and turn-indicator lamps.

The AD8240 LED lamp driver/monitor is designed for use in the body control or related module. When used this way, it is very similar to the method that has been used to control external incandescent lamps. By utilizing the existing lamp driving architecture, additional modules are not required to drive the external lamps, which further minimizes the cost. It is possible to retrofit existing lamp driving modules with the AD8240 with minimal engineering time required.

OUTLINE DIMENSIONS

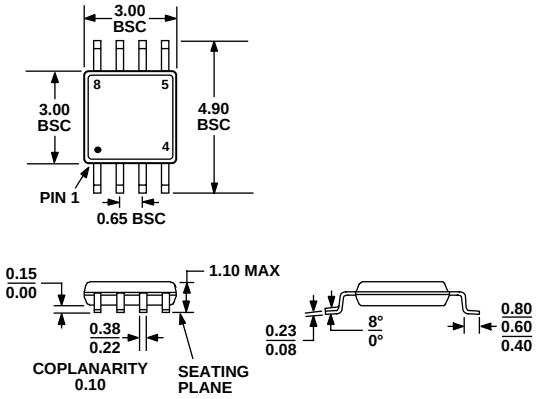

Figure 4. 8-Lead Mini Small Outline Package [MSOP]
(RM-8)
Dimensions shown in millimeters

ORDERING GUIDE

Model	Temperature Range	Package Description	Package Option	Package Outline
AD8240YRM	−40°C to +125°C	8-Lead MSOP	RM-8	JTA
AD8240YRM-REEL	−40°C to +125°C	MSOP, 13″ Tape and Reel	RM-8	JTA
AD8240YRM-REEL7	−40°C to +125°C	MSOP, 7″ Tape and Reel	RM-8	JTA

NOTES

© 2004 Analog Devices, Inc. All rights reserved. Trademarks and registered trademarks are the property of their respective owners.
D04824-0-4/04(0)

www.analog.com

OCEAN CHIPS
Океан Электроники
Поставка электронных компонентов

Компания «Океан Электроники» предлагает заключение долгосрочных отношений при поставках импортных электронных компонентов на взаимовыгодных условиях!

Наши преимущества:

- Поставка оригинальных импортных электронных компонентов напрямую с производств Америки, Европы и Азии, а так же с крупнейших складов мира;
- Широкая линейка поставок активных и пассивных импортных электронных компонентов (более 30 млн. наименований);
- Поставка сложных, дефицитных, либо снятых с производства позиций;
- Оперативные сроки поставки под заказ (от 5 рабочих дней);
- Экспресс доставка в любую точку России;
- Помощь Конструкторского Отдела и консультации квалифицированных инженеров;
- Техническая поддержка проекта, помощь в подборе аналогов, поставка прототипов;
- Поставка электронных компонентов под контролем ВП;
- Система менеджмента качества сертифицирована по Международному стандарту ISO 9001;
- При необходимости вся продукция военного и аэрокосмического назначения проходит испытания и сертификацию в лаборатории (по согласованию с заказчиком);
- Поставка специализированных компонентов военного и аэрокосмического уровня качества (Xilinx, Altera, Analog Devices, Intersil, Interpoint, Microsemi, Actel, Aeroflex, Peregrine, VPT, Syfer, Eurofarad, Texas Instruments, MS Kennedy, Miteq, Cobham, E2V, MA-COM, Hittite, Mini-Circuits, General Dynamics и др.);

Компания «Океан Электроники» является официальным дистрибьютором и эксклюзивным представителем в России одного из крупнейших производителей разъемов военного и аэрокосмического назначения **«JONHON»**, а так же официальным дистрибьютором и эксклюзивным представителем в России производителя высокотехнологичных и надежных решений для передачи СВЧ сигналов **«FORSTAR»**.

AVIC JONHON

«JONHON» (основан в 1970 г.)

Разъемы специального, военного и аэрокосмического назначения:

(Применяются в военной, авиационной, аэрокосмической, морской, железнодорожной, горно- и нефтедобывающей отраслях промышленности)

«FORSTAR» (основан в 1998 г.)

ВЧ соединители, коаксиальные кабели, кабельные сборки и микроволновые компоненты:

(Применяются в телекоммуникациях гражданского и специального назначения, в средствах связи, РЛС, а так же военной, авиационной и аэрокосмической отраслях промышленности).

FORSTAR®

Телефон: 8 (812) 309-75-97 (многоканальный)
Факс: 8 (812) 320-03-32
Электронная почта: ocean@oceanchips.ru
Web: http://oceanchips.ru/
Адрес: 198099, г. Санкт-Петербург, ул. Калинина, д. 2, корп. 4, лит. А