**Freescale Semiconductor**
Data Sheet: Technical Data

MPX5010
Rev 13, 10/2012

# Integrated Silicon Pressure Sensor On-Chip Signal Conditioned, Temperature Compensated and Calibrated

The MPxx5010 series piezoresistive transducers are state-of-the-art monolithic silicon pressure sensors designed for a wide range of applications, but particularly those employing a microcontroller or microprocessor with A/D inputs. This transducer combines advanced micromachining techniques, thin-film metallization, and bipolar processing to provide an accurate, high level analog output signal that is proportional to the applied pressure. The axial port has been modified to accommodate industrial grade tubing.

## Features

- 5.0% Maximum Error over 0° to 85°C
- Ideally Suited for Microprocessor or Microcontroller-Based Systems
- Durable Epoxy Unibody and Thermoplastic (PPS) Surface Mount Package
- Temperature Compensated over -40° to +125°C
- Patented Silicon Shear Stress Strain Gauge
- Available in Differential and Gauge Configurations
- Available in Surface Mount (SMT) or Through-hole (DIP) Configurations

**MPX5010**
**MPXV5010**
**MPVZ5010**
**Series**

**0 to 10 kPa (0 to 1.45 psi)**
**(0 to 1019.78 mm $H_2O$)**
**0.2 to 4.7 V Output**

## Application Examples

- Hospital Beds
- HVAC
- Respiratory Systems
- Process Control
- Washing Machine Water Level Measurement (Reference AN1950)
- Ideally Suited for Microprocessor or Microcontroller-Based Systems
- Appliance Liquid Level and Pressure Measurement

**ORDERING INFORMATION**

| Device Name | Case No. | # of Ports | | | Pressure Type | | | Device Marking |
|---|---|---|---|---|---|---|---|---|
| | | None | Single | Dual | Gauge | Differential | Absolute | |
| **Unibody Package (MPX5010 Series)** | | | | | | | | |
| MPX5010DP | 867C | | | • | | • | | MPX5010DP |
| MPX5010GP | 867B | | • | | • | | | MPX5010GP |
| MPX5010GS | 867E | | • | | • | | | MPX5010D |
| MPX5010GSX | 867F | | • | | • | | | MPX5010D |
| **Small Outline Package (MPXV5010 Series)** | | | | | | | | |
| MPXV5010DP | 1351 | | | • | | • | | MPXV5010DP |
| MPXV5010G6U | 482 | • | | | • | | | MPXV5010G |
| MPXV5010GC6T1 | 482A | | • | | • | | | MPXV5010G |
| MPXV5010GC6U | 482A | | • | | • | | | MPXV5010G |
| MPXV5010GC7U | 482C | | • | | • | | | MPXV5010G |
| MPXV5010GP | 1369 | | • | | • | | | MPXV5010GP |
| **Small Outline Package (Media Resistant Gel) (MPVZ5010 Series)** | | | | | | | | |
| MPVZ5010G6U | 482 | • | | | • | | | MPVZ5010G |
| MPVZ5010G7U | 482B | • | | | • | | | MPVZ5010G |
| MPVZ5010GW6U | 1735 | | • | | • | | | MZ5010GW |
| MPVZ5010GW7U | 1560 | | • | | • | | | MZ5010GW |

© 2007-2009, 2012 Freescale Semiconductor, Inc. All rights reserved.

## SMALL OUTLINE PACKAGES SURFACE MOUNT

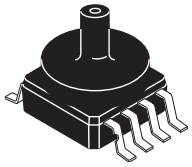

MPXV5010GC6U/C6T1
CASE 482A-01

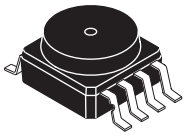

MPXV5010G6U,
MPVZ5010G6U
CASE 482-01

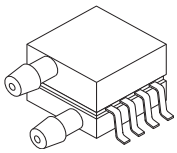

MPXV5010DP
CASE 1351-01

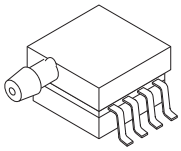

MPXV5010GP
CASE 1369-01

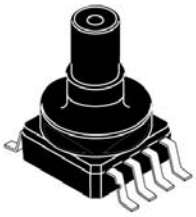

MPVZ5010GW6U
CASE 1735-01

## SMALL OUTLINE PACKAGES THROUGH-HOLE

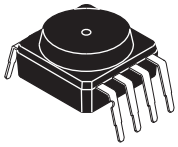

MPVZ5010G7U
CASE 482B-03

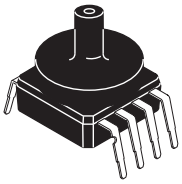

MPXV5010GC7U
CASE 482C-03

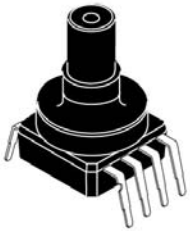

MPVZ5010GW7U
CASE 1560-02

## UNIBODY PACKAGES

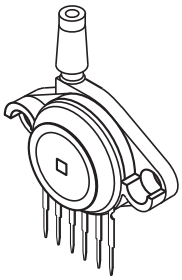

MPX5010GP
CASE 867B-04

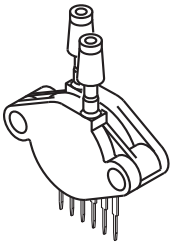

MPX5010DP
CASE 867C-05

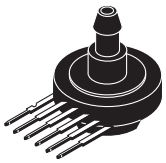

MPX5010GS
CASE 867E-03

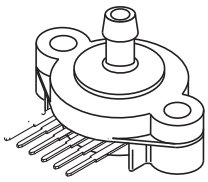

MPX5010GSX
CASE 867F-03

## Operating Characteristics

**Table 1. Operating Characteristics** ($V_S$ = 5.0 Vdc, $T_A$ = 25°C unless otherwise noted, P1 > P2. Decoupling circuit shown in Figure 3 required to meet specification.)

| Characteristic | | Symbol | Min | Typ | Max | Unit |
|---|---|---|---|---|---|---|
| Pressure Range | | $P_{OP}$ | 0 | — | 10<br>1019.78 | kPa<br>mm $H_2O$ |
| Supply Voltage[1] | | $V_S$ | 4.75 | 5.0 | 5.25 | Vdc |
| Supply Current | | $I_o$ | — | 5.0 | 10 | mAdc |
| Minimum Pressure Offset[2]<br>@ $V_S$ = 5.0 Volts | (0 to 85°C) | $V_{off}$ | 0 | 0.2 | 0.425 | Vdc |
| Full Scale Output[3]<br>@ $V_S$ = 5.0 Volts | (0 to 85°C) | $V_{FSO}$ | 4.475 | 4.7 | 4.925 | Vdc |
| Full Scale Span[4]<br>@ $V_S$ = 5.0 Volts | (0 to 85°C) | $V_{FSS}$ | 4.275 | 4.5 | 4.725 | Vdc |
| Accuracy[5] | (0 to 85°C) | — | — | — | ±5.0 | $\%V_{FSS}$ |
| Sensitivity | | V/P | — | 450<br>4.413 | — | mV/mm<br>mV/mm $H_2O$ |
| Response Time[6] | | $t_R$ | — | 1.0 | — | ms |
| Output Source Current at Full Scale Output | | $I_{O+}$ | — | 0.1 | — | mAdc |
| Warm-Up Time[7] | | — | — | 20 | — | ms |
| Offset Stability[8] | | — | — | ±0.5 | — | $\%V_{FSS}$ |

1. Device is ratiometric within this specified excitation range.
2. Offset ($V_{off}$) is defined as the output voltage at the minimum rated pressure.
3. Full Scale Output ($V_{FSO}$) is defined as the output voltage at the maximum or full rated pressure.
4. Full Scale Span ($V_{FSS}$) is defined as the algebraic difference between the output voltage at full rated pressure and the output voltage at the minimum rated pressure.
5. Accuracy (error budget) consists of the following:
   Linearity: Output deviation from a straight line relationship with pressure over the specified pressure range.
   Temperature Hysteresis:Output deviation at any temperature within the operating temperature range, after the temperature is cycled to and from the minimum or maximum operating temperature points, with zero differential pressure applied.
   Pressure Hysteresis:Output deviation at any pressure within the specified range, when this pressure is cycled to and from the minimum or maximum rated pressure, at 25°C.
   TcSpan: Output deviation over the temperature range of 0° to 85°C, relative to 25°C.
   TcOffset:Output deviation with minimum rated pressure applied, over the temperature range of 0° to 85°C, relative to 25°C.
   Variation from Nominal:The variation from nominal values, for Offset or Full Scale Span, as a percent of $V_{FSS}$, at 25°C.
6. Response Time is defined as the time for the incremental change in the output to go from 10% to 90% of its final value when subjected to a specified step change in pressure.
7. Warm-up Time is defined as the time required for the product to meet the specified output voltage after the Pressure has been stabilized.
8. Offset Stability is the product's output deviation when subjected to 1000 hours of Pulsed Pressure, Temperature Cycling with Bias Test.

## Maximum Ratings

**Table 2. Maximum Ratings[1]**

| Rating | Symbol | Value | Unit |
|---|---|---|---|
| Maximum Pressure (P1 > P2) | $P_{max}$ | 40 | kPa |
| Storage Temperature | $T_{stg}$ | –40 to +125 | °C |
| Operating Temperature | $T_A$ | –40 to +125 | °C |

1. Exposure beyond the specified limits may cause permanent damage or degradation to the device.

Figure 1 shows a block diagram of the internal circuitry integrated on a pressure sensor chip.

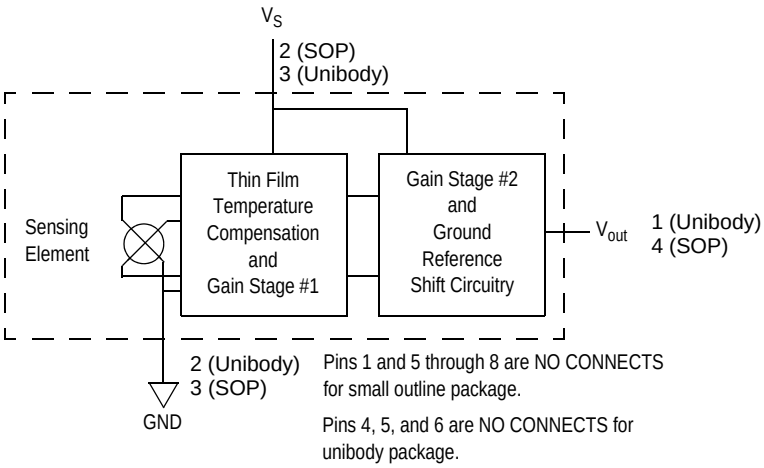


**Figure 1. Fully Integrated Pressure Sensor Schematic**

## ON-CHIP TEMPERATURE COMPENSATION AND CALIBRATION

The performance over temperature is achieved by integrating the shear-stress strain gauge, temperature compensation, calibration and signal conditioning circuitry onto a single monolithic chip.

Figure 3 illustrates the Differential or Gauge configuration in the basic chip carrier (Case 482). A fluorosilicone gel isolates the die surface and wire bonds from the environment, while allowing the pressure signal to be transmitted to the sensor diaphragm.

The MPxx5010G series pressure sensor operating characteristics, and internal reliability and qualification tests are based on use of dry air as the pressure media. Media, other than dry air, may have adverse effects on sensor performance and long-term reliability. Contact the factory for information regarding media compatibility in your application.

Figure 4 shows the recommended decoupling circuit for interfacing the integrated sensor to the A/D input of a microprocessor or microcontroller. Proper decoupling of the power supply is recommended.

Figure 5 shows the sensor output signal relative to pressure input. Typical, minimum, and maximum output curves are shown for operation over a temperature range of 0° to 85°C using the decoupling circuit shown in Figure 4. The output will saturate outside of the specified pressure range.

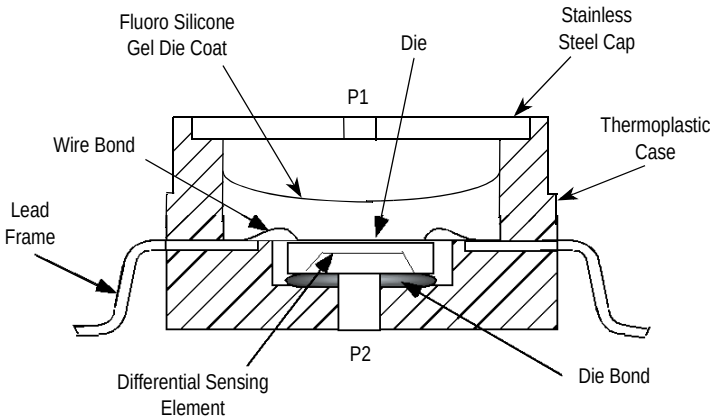


**Figure 2. Cross-Sectional Diagram SOP (not to scale)**

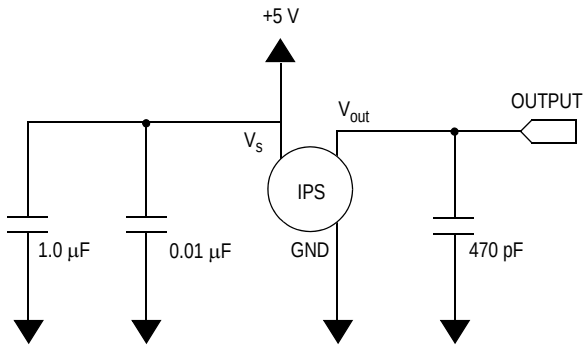


**Figure 3. Recommended Power Supply Decoupling and Output Filtering**
(For additional output filtering, please refer to Application Note AN1646.)

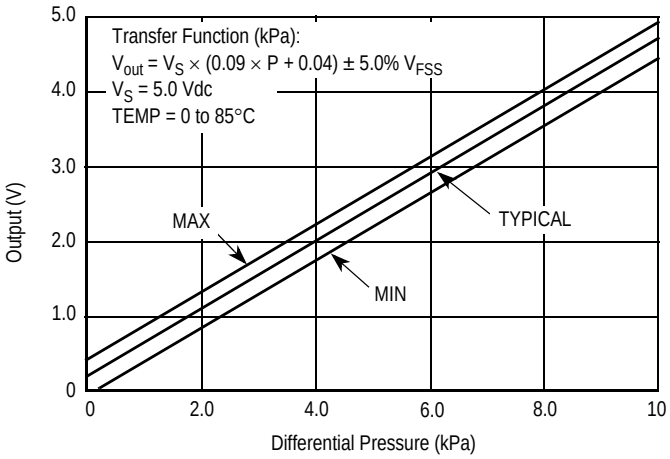


**Figure 4. Output vs. Pressure Differential**

## Transfer Function

**Nominal Transfer Value:** $V_{out} = V_S \times (0.09 \times P + 0.04)$
$\pm$ (Pressure Error x Temp. Factor x 0.09 x $V_S$)
$V_S = 5.0\ V \pm 0.25$ Vdc

## Temperature Error Band

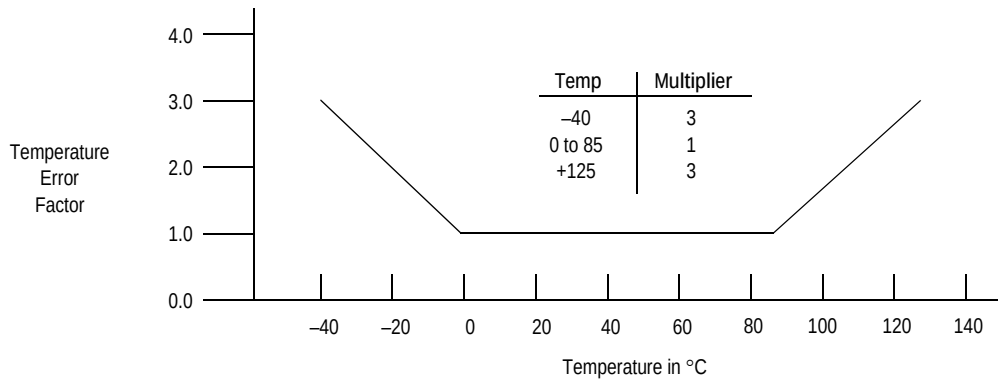


| Temp | Multiplier |
|---|---|
| –40 | 3 |
| 0 to 85 | 1 |
| +125 | 3 |

NOTE: The Temperature Multiplier is a linear response from 0° to –40°C and from 85° to 125°C.

## Pressure Error Band

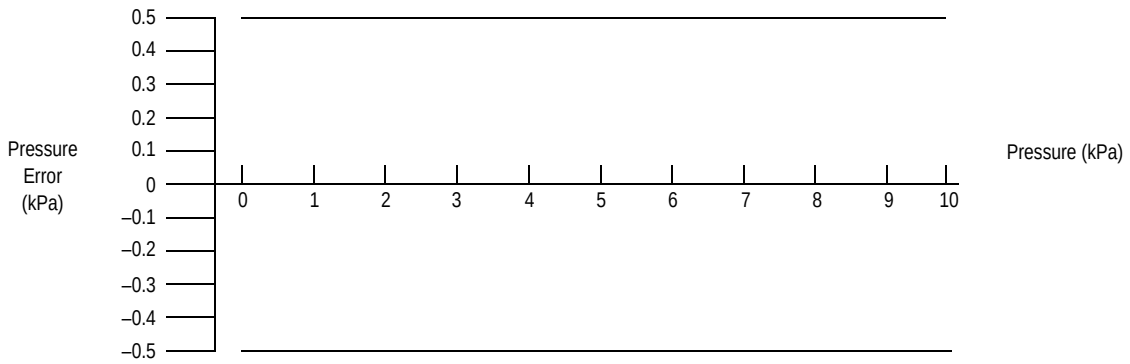


| Pressure | Error (Max) |
|---|---|
| 0 to 10 (kPa) | ±0.5 (kPa) |

## PRESSURE (P1)/VACUUM (P2) SIDE IDENTIFICATION TABLE

Freescale designates the two sides of the pressure sensor as the Pressure (P1) side and the Vacuum (P2) side. The Pressure (P1) side is the side containing fluorosilicone gel which protects the die from harsh media. The MPX pressure sensor is designed to operate with positive differential pressure applied, P1 > P2.

The Pressure (P1) side may be identified by using the table below:

| Part Number | Case Type | Pressure (P1) Side Identifier |
|---|---|---|
| MPX5010DP | 867C | Side with Part Marking |
| MPX5010GP | 867B | Side with Port Attached |
| MPX5010GS | 867E | Side with Port Attached |
| MPX5010GSX | 867F | Side with Port Attached |
| MPXV5010G6U | 482 | Stainless Steel Cap |
| MPXV5010GC6U/6T1 | 482A | Side with Port Attached |
| MPXV5010GC7U | 482C | Side with Port Attached |
| MPXV5010GP | 1369 | Side with Port Attached |
| MPXV5010DP | 1351 | Side with Part Marking |
| MPVZ5010G6U | 482 | Stainless Steel Cap |
| MPVZ5010G7U | 482B | Stainless Steel Cap |
| MPVZ5010GW6U | 1735 | Vertical Port Attached |
| MPVZ5010GW7U | 1560 | Vertical Port Attached |

## MINIMUM RECOMMENDED FOOTPRINT FOR SURFACE MOUNTED APPLICATIONS

Surface mount board layout is a critical portion of the total design. The footprint for the surface mount packages must be the correct size to ensure proper solder connection interface between the board and the package. With the correct footprint, the packages will self align when subjected to a solder reflow process. It is always recommended to design boards with a solder mask layer to avoid bridging and shorting between solder pads.

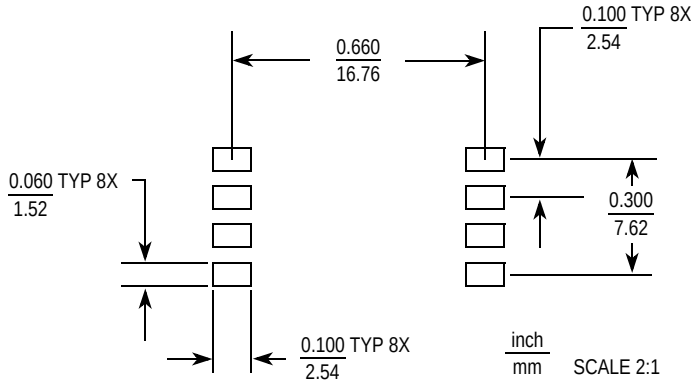


**Figure 5. SOP Footprint (Case 482)**

# PACKAGE DIMENSIONS

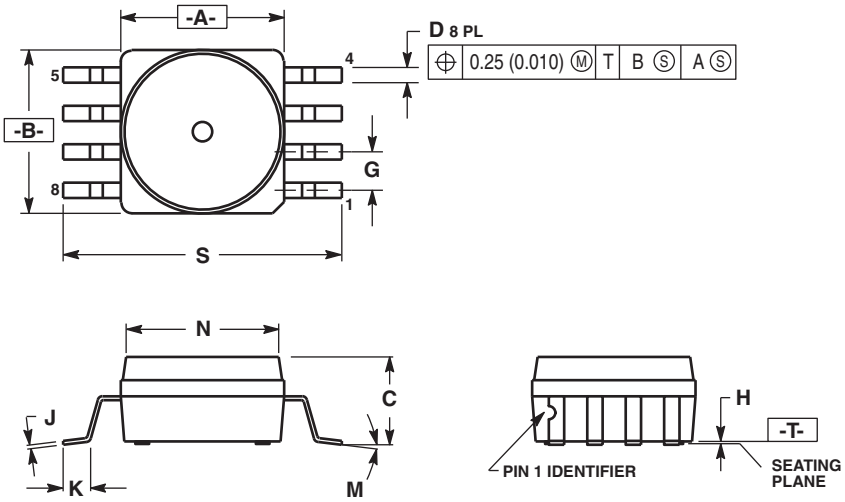


NOTES:
1. DIMENSIONING AND TOLERANCING PER ANSI Y14.5M, 1982.
2. CONTROLLING DIMENSION: INCH.
3. DIMENSION A AND B DO NOT INCLUDE MOLD PROTRUSION.
4. MAXIMUM MOLD PROTRUSION 0.15 (0.006).
5. ALL VERTICAL SURFACES 5° TYPICAL DRAFT.

| | INCHES | | MILLIMETERS | |
|---|---|---|---|---|
| DIM | MIN | MAX | MIN | MAX |
| A | 0.415 | 0.425 | 10.54 | 10.79 |
| B | 0.415 | 0.425 | 10.54 | 10.79 |
| C | 0.212 | 0.230 | 5.38 | 5.84 |
| D | 0.038 | 0.042 | 0.96 | 1.07 |
| G | 0.100 BSC | | 2.54 BSC | |
| H | 0.002 | 0.010 | 0.05 | 0.25 |
| J | 0.009 | 0.011 | 0.23 | 0.28 |
| K | 0.061 | 0.071 | 1.55 | 1.80 |
| M | 0° | 7° | 0° | 7° |
| N | 0.405 | 0.415 | 10.29 | 10.54 |
| S | 0.709 | 0.725 | 18.01 | 18.41 |

**CASE 482-01**
**ISSUE O**
**SMALL OUTLINE PACKAGE**

---

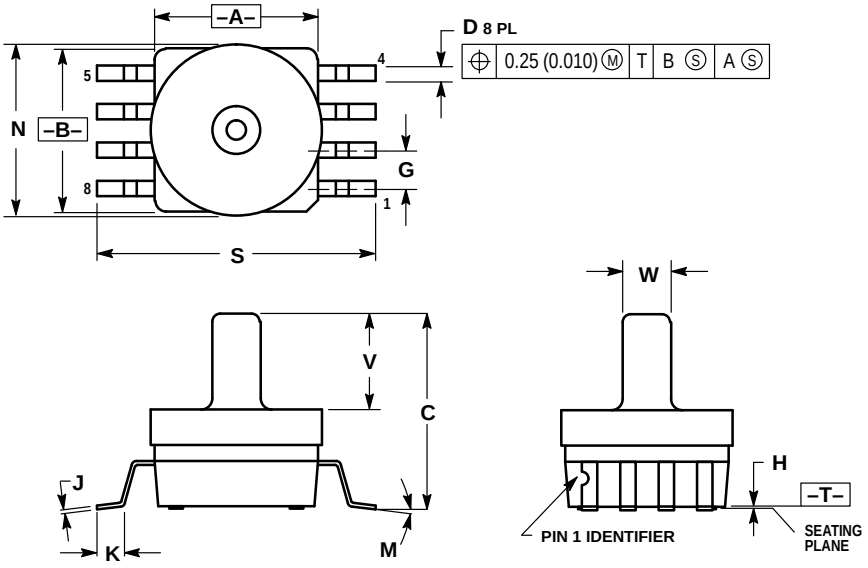


NOTES:
1. DIMENSIONING AND TOLERANCING PER ANSI Y14.5M, 1982.
2. CONTROLLING DIMENSION: INCH.
3. DIMENSION A AND B DO NOT INCLUDE MOLD PROTRUSION.
4. MAXIMUM MOLD PROTRUSION 0.15 (0.006).
5. ALL VERTICAL SURFACES 5° TYPICAL DRAFT.

| | INCHES | | MILLIMETERS | |
|---|---|---|---|---|
| DIM | MIN | MAX | MIN | MAX |
| A | 0.415 | 0.425 | 10.54 | 10.79 |
| B | 0.415 | 0.425 | 10.54 | 10.79 |
| C | 0.500 | 0.520 | 12.70 | 13.21 |
| D | 0.038 | 0.042 | 0.96 | 1.07 |
| G | 0.100 BSC | | 2.54 BSC | |
| H | 0.002 | 0.010 | 0.05 | 0.25 |
| J | 0.009 | 0.011 | 0.23 | 0.28 |
| K | 0.061 | 0.071 | 1.55 | 1.80 |
| M | 0° | 7° | 0° | 7° |
| N | 0.444 | 0.448 | 11.28 | 11.38 |
| S | 0.709 | 0.725 | 18.01 | 18.41 |
| V | 0.245 | 0.255 | 6.22 | 6.48 |
| W | 0.115 | 0.125 | 2.92 | 3.17 |

**CASE 482A-0**
**ISSUE A**
**SMALL OUTLINE PACKAGE**

# PACKAGE DIMENSIONS

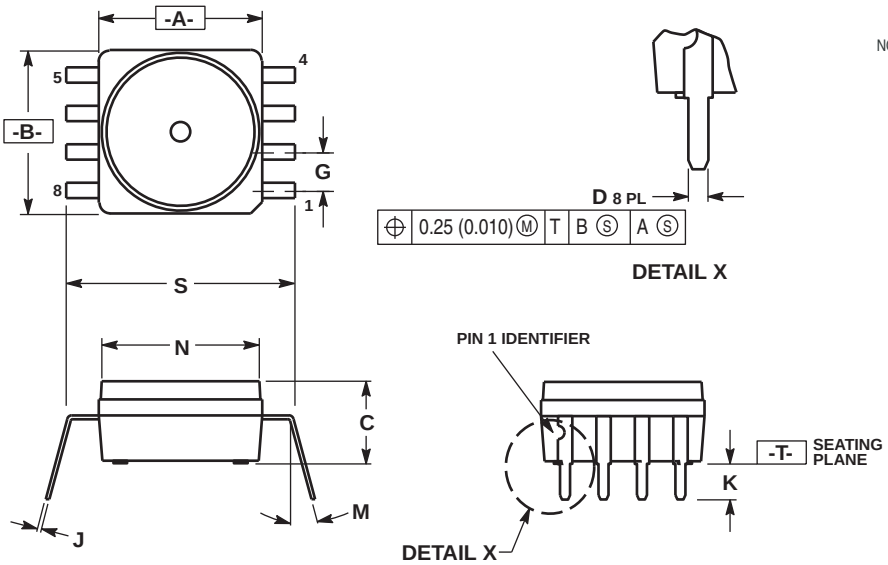


NOTES:
1. DIMENSIONING AND TOLERANCING PER ANSI Y14.5M, 1982.
2. CONTROLLING DIMENSION: INCH.
3. DIMENSION A AND B DO NOT INCLUDE MOLD PROTRUSION.
4. MAXIMUM MOLD PROTRUSION 0.15 (0.006).
5. ALL VERTICAL SURFACES 5° TYPICAL DRAFT.
6. DIMENSION S TO CENTER OF LEAD WHEN FORMED PARALLEL.

| | INCHES | | MILLIMETERS | |
|---|---|---|---|---|
| DIM | MIN | MAX | MIN | MAX |
| A | 0.415 | 0.425 | 10.54 | 10.79 |
| B | 0.415 | 0.425 | 10.54 | 10.79 |
| C | 0.210 | 0.220 | 5.33 | 5.59 |
| D | 0.026 | 0.034 | 0.66 | 0.864 |
| G | 0.100 BSC | | 2.54 BSC | |
| J | 0.009 | 0.011 | 0.23 | 0.28 |
| K | 0.100 | 0.120 | 2.54 | 3.05 |
| M | 0° | 15° | 0° | 15° |
| N | 0.405 | 0.415 | 10.29 | 10.54 |
| S | 0.540 | 0.560 | 13.72 | 14.22 |

**CASE 482B-03**
**ISSUE B**
**SMALL OUTLINE PACKAGE**

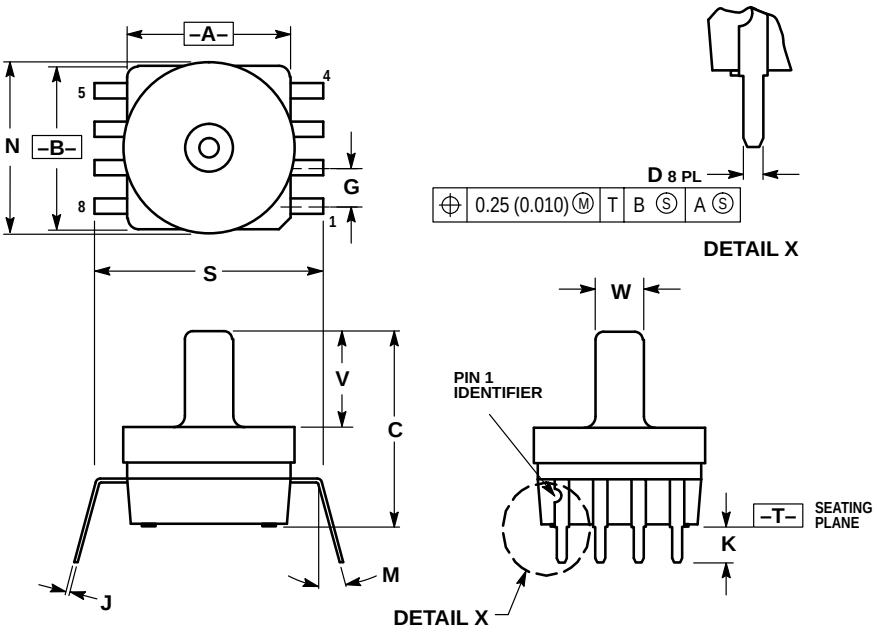


NOTES:
1. DIMENSIONING AND TOLERANCING PER ANSI Y14.5M, 1982.
2. CONTROLLING DIMENSION: INCH.
3. DIMENSION A AND B DO NOT INCLUDE MOLD PROTRUSION.
4. MAXIMUM MOLD PROTRUSION 0.15 (0.006).
5. ALL VERTICAL SURFACES 5° TYPICAL DRAFT.
6. DIMENSION S TO CENTER OF LEAD WHEN FORMED PARALLEL.

| | INCHES | | MILLIMETERS | |
|---|---|---|---|---|
| DIM | MIN | MAX | MIN | MAX |
| A | 0.415 | 0.425 | 10.54 | 10.79 |
| B | 0.415 | 0.425 | 10.54 | 10.79 |
| C | 0.500 | 0.520 | 12.70 | 13.21 |
| D | 0.026 | 0.034 | 0.66 | 0.864 |
| G | 0.100 BSC | | 2.54 BSC | |
| J | 0.009 | 0.011 | 0.23 | 0.28 |
| K | 0.100 | 0.120 | 2.54 | 3.05 |
| M | 0° | 15° | 0° | 15° |
| N | 0.444 | 0.448 | 11.28 | 11.38 |
| S | 0.540 | 0.560 | 13.72 | 14.22 |
| V | 0.245 | 0.255 | 6.22 | 6.48 |
| W | 0.115 | 0.125 | 2.92 | 3.17 |

**CASE 482C-03**
**ISSUE B**
**SMALL OUTLINE PACKAGE**

# PACKAGE DIMENSIONS

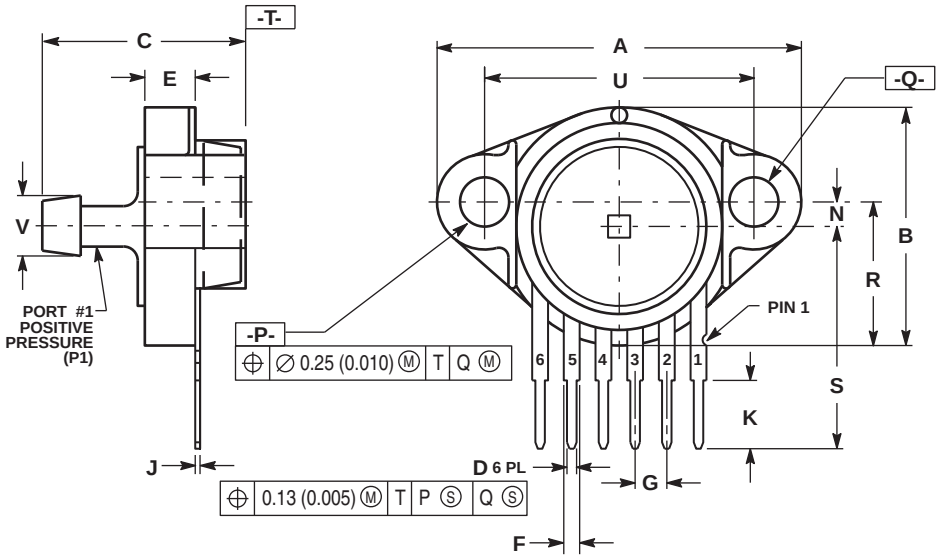


NOTES:
1. DIMENSIONING AND TOLERANCING PER ANSI Y14.5M, 1982.
2. CONTROLLING DIMENSION: INCH.

| | INCHES | | MILLIMETERS | |
|---|---|---|---|---|
| DIM | MIN | MAX | MIN | MAX |
| A | 1.080 | 1.120 | 27.43 | 28.45 |
| B | 0.740 | 0.760 | 18.80 | 19.30 |
| C | 0.630 | 0.650 | 16.00 | 16.51 |
| D | 0.027 | 0.033 | 0.68 | 0.84 |
| E | 0.160 | 0.180 | 4.06 | 4.57 |
| F | 0.048 | 0.064 | 1.22 | 1.63 |
| G | 0.100 BSC | | 2.54 BSC | |
| J | 0.014 | 0.016 | 0.36 | 0.41 |
| K | 0.220 | 0.240 | 5.59 | 6.10 |
| N | 0.070 | 0.080 | 1.78 | 2.03 |
| P | 0.150 | 0.160 | 3.81 | 4.06 |
| Q | 0.150 | 0.160 | 3.81 | 4.06 |
| R | 0.440 | 0.460 | 11.18 | 11.68 |
| S | 0.695 | 0.725 | 17.65 | 18.42 |
| U | 0.840 | 0.860 | 21.34 | 21.84 |
| V | 0.182 | 0.194 | 4.62 | 4.93 |

STYLE 1:
PIN 1. $V_{OUT}$
2. GROUND
3. $V_{CC}$
4. V1
5. V2
6. $V_{EX}$

**CASE 867F-03**
**ISSUE D**
**UNIBODY PACKAGE**

## PACKAGE DIMENSIONS

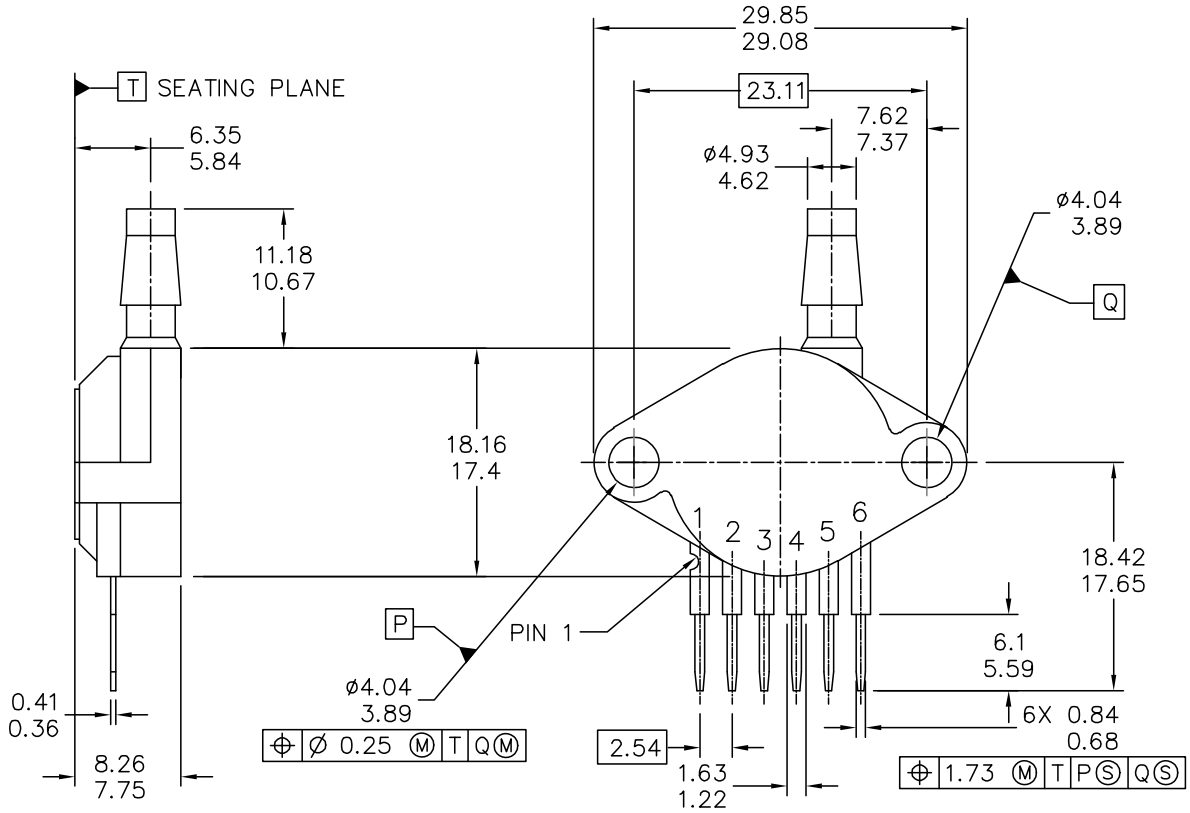


| © FREESCALE SEMICONDUCTOR, INC. ALL RIGHTS RESERVED. | MECHANICAL OUTLINE | PRINT VERSION NOT TO SCALE |
|---|---|---|
| TITLE: SENSOR, 6 LEAD UNIBODY CELL, AP & GP 01ASB09087B | DOCUMENT NO: 98ASB42796B | REV: G |
| | CASE NUMBER: 867B-04 | 28 JUL 2005 |
| | STANDARD: NON-JEDEC | |

PAGE 1 OF 2

**CASE 867B-04**
**ISSUE G**
**UNIBODY PACKAGE**

# PACKAGE DIMENSIONS

NOTES:

1. DIMENSIONS ARE IN MILLIMETERS.
2. DIMENSIONS AND TOLERANCES PER ASME Y14.5M–1994.
3. 867B–01 THRU –3 OBSOLETE, NEW STANDARD 867B–04.

STYLE 1:

PIN 1: V OUT
2: GROUND
3: VCC
4: V1
5: V2
6: V EX

| | | |
|---|---|---|
| © FREESCALE SEMICONDUCTOR, INC. ALL RIGHTS RESERVED. | **MECHANICAL OUTLINE** | PRINT VERSION NOT TO SCALE |
| TITLE: SENSOR, 6 LEAD UNIBODY CELL, AP & GP 01ASB09087B | DOCUMENT NO: 98ASB42796B | REV: G |
| | CASE NUMBER: 867B–04 | 28 JUL 2005 |
| | STANDARD: NON–JEDEC | |

PAGE 2 OF 2

**CASE 867B-04**
**ISSUE G**
**UNIBODY PACKAGE**

# PACKAGE DIMENSIONS

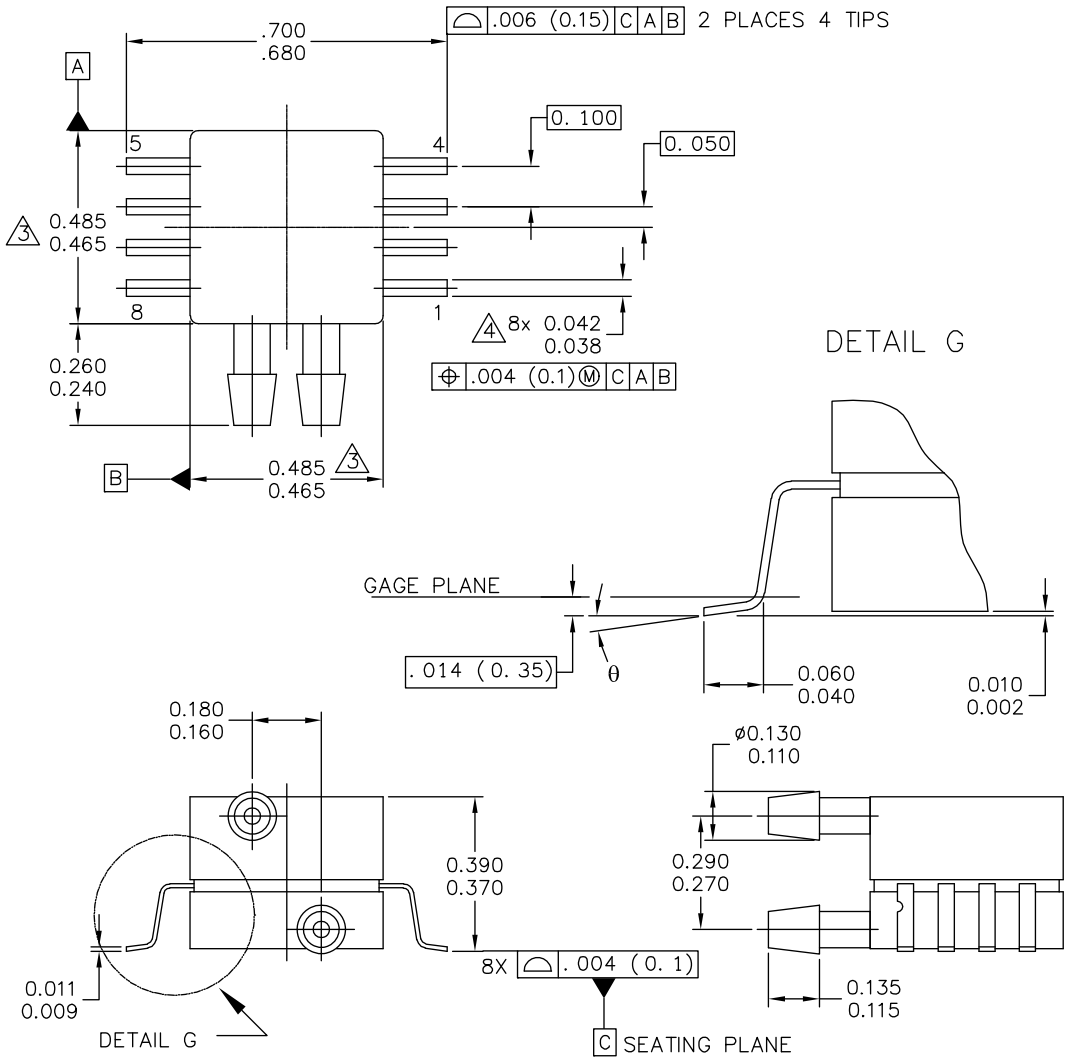


| © FREESCALE SEMICONDUCTOR, INC. ALL RIGHTS RESERVED. | MECHANICAL OUTLINE | PRINT VERSION NOT TO SCALE |
|---|---|---|
| TITLE: 8 LD SNSR, DUAL PORT | DOCUMENT NO: 98ASA99255D | REV: A |
| | CASE NUMBER: 1351-01 | 27 JUL 2005 |
| | STANDARD: NON-JEDEC | |

PAGE 1 OF 2

**CASE 1351-01**
**ISSUE A**
**SMALL OUTLINE PACKAGE**

# PACKAGE DIMENSIONS

NOTES:

1. CONTROLLING DIMENSION: INCH

2. INTERPRET DIMENSIONS AND TOLERANCES PER ASME Y14.5M–1994.

3. DIMENSIONS DO NOT INCLUDE MOLD FLASH OR PPROTRUSIONS. MOLD FLASH AND PROTRUSIONS SHALL NOT EXCEED .006 PER SIDE.

4. DIMENSION DOES NOT INCLUDE DAMBAR PROTRUSION. ALLOWABLE DAMBAR PROTRUSION SHALL BE .008 MAXIMUM.

| STYLE 1: | | STYLE 2: | |
|---|---|---|---|
| PIN 1: | GND | PIN 1: | N/C |
| PIN 2: | +Vout | PIN 2: | Vs |
| PIN 3: | Vs | PIN 3: | GND |
| PIN 4: | –Vout | PIN 4: | Vout |
| PIN 5: | N/C | PIN 5: | N/C |
| PIN 6: | N/C | PIN 6: | N/C |
| PIN 7: | N/C | PIN 7: | N/C |
| PIN 8: | N/C | PIN 8: | N/C |

| © FREESCALE SEMICONDUCTOR, INC. ALL RIGHTS RESERVED. | MECHANICAL OUTLINE | PRINT VERSION NOT TO SCALE |
|---|---|---|
| TITLE: 8 LD SNSR, DUAL PORT | DOCUMENT NO: 98ASA99255D | REV: A |
| | CASE NUMBER: 1351–01 | 27 JUL 2005 |
| | STANDARD: NON–JEDEC | |

PAGE 2 OF 2

**CASE 1351-01**
**ISSUE A**
**SMALL OUTLINE PACKAGE**

# PACKAGE DIMENSIONS

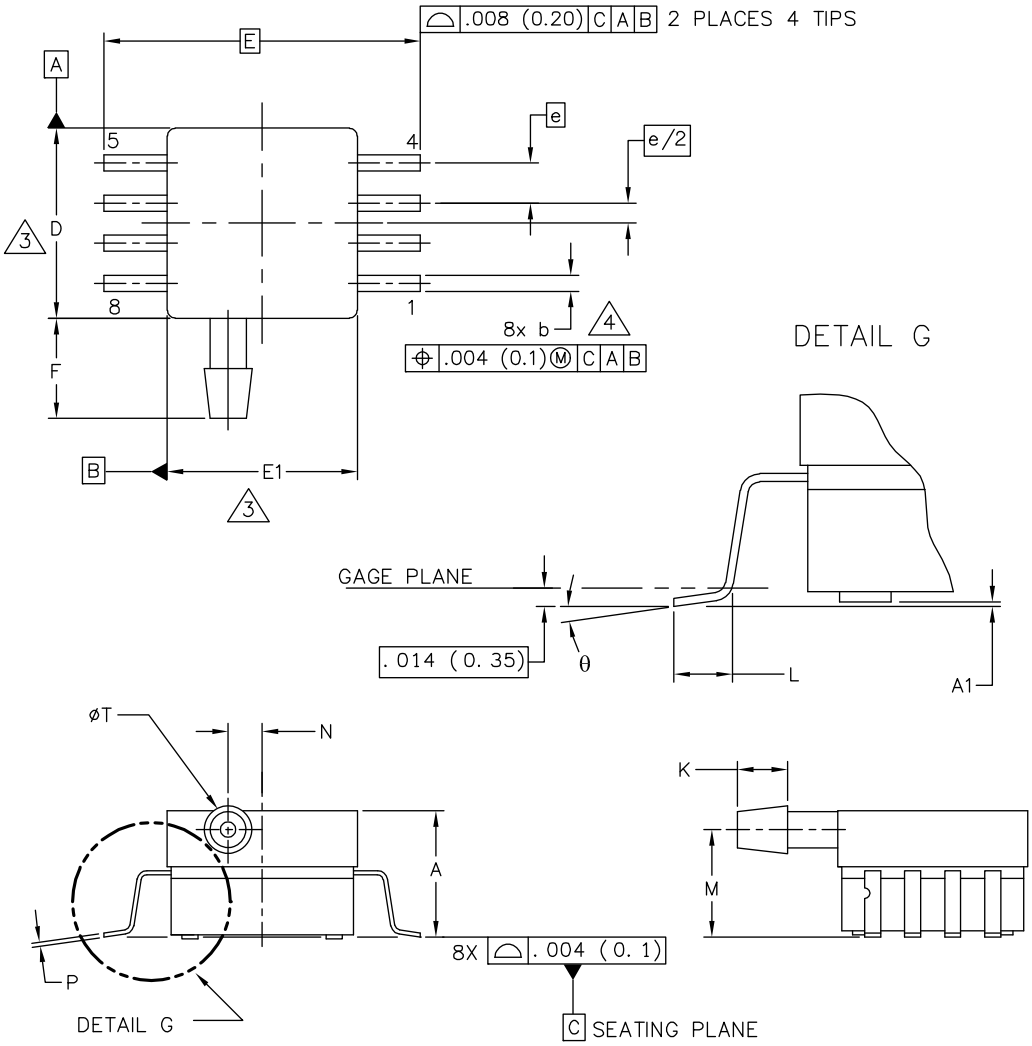


| © FREESCALE SEMICONDUCTOR, INC. ALL RIGHTS RESERVED. | MECHANICAL OUTLINE | PRINT VERSION NOT TO SCALE |
|---|---|---|
| TITLE: 8 LD SOP, SIDE PORT | DOCUMENT NO: 98ASA99303D | REV: B |
| | CASE NUMBER: 1369-01 | 24 MAY 2005 |
| | STANDARD: NON-JEDEC | |

PAGE 1 OF 2

**CASE 1369-01**
**ISSUE B**
**SMALL OUTLINE PACKAGE**

# PACKAGE DIMENSIONS

NOTES:
1. CONTROLLING DIMENSION: INCH

2. INTERPRET DIMENSIONS AND TOLERANCES PER ASME Y14.5M–1994.

3. DIMENSIONS DO NOT INCLUDE MOLD FLASH OR PPROTRUSIONS.
MOLD FLASH AND PROTRUSIONS SHALL NOT EXCEED .006 (0.152) PER SIDE.

4. DIMENSION DOES NOT INCLUDE DAMBAR PROTRUSION. ALLOWABLE DAMBAR
PROTRUSION SHALL BE .008 (0.203) MAXIMUM.

| DIM | INCHES MIN | INCHES MAX | MILLIMETERS MIN | MILLIMETERS MAX | DIM | INCHES MIN | INCHES MAX | MILLIMETERS MIN | MILLIMETERS MAX |
|---|---|---|---|---|---|---|---|---|---|
| A | .300 | .330 | 7.11 | 7.62 | θ | 0° | 7° | 0° | 7° |
| A1 | .002 | .010 | 0.05 | 0.25 | – | --- | --- | --- | --- |
| b | .038 | .042 | 0.96 | 1.07 | – | --- | --- | --- | --- |
| D | .465 | .485 | 11.81 | 12.32 | – | --- | --- | --- | --- |
| E | .717 BSC | | 18.21 BSC | | – | --- | --- | --- | --- |
| E1 | .465 | .485 | 11.81 | 12.32 | – | --- | --- | --- | --- |
| e | .100 BSC | | 2.54 BSC | | – | --- | --- | --- | --- |
| F | .245 | .255 | 6.22 | 6.47 | – | --- | --- | --- | --- |
| K | .120 | .130 | 3.05 | 3.30 | – | --- | --- | --- | --- |
| L | .061 | .071 | 1.55 | 1.80 | – | --- | --- | --- | --- |
| M | .270 | .290 | 6.86 | 7.36 | – | --- | --- | --- | --- |
| N | .080 | .090 | 2.03 | 2.28 | – | --- | --- | --- | --- |
| P | .009 | .011 | 0.23 | 0.28 | – | --- | --- | --- | --- |
| T | .115 | .125 | 2.92 | 3.17 | – | --- | --- | --- | --- |

| | | |
|---|---|---|
| © FREESCALE SEMICONDUCTOR, INC. ALL RIGHTS RESERVED. | **MECHANICAL OUTLINE** | PRINT VERSION NOT TO SCALE |

| | | |
|---|---|---|
| TITLE: 8 LD SOP, SIDE PORT | DOCUMENT NO: 98ASA99303D | REV: B |
| | CASE NUMBER: 1369–01 | 24 MAY 2005 |
| | STANDARD: NON–JEDEC | |

PAGE 2 OF 2

**CASE 1369-01**
**ISSUE B**
**SMALL OUTLINE PACKAGE**

# PACKAGE DIMENSIONS

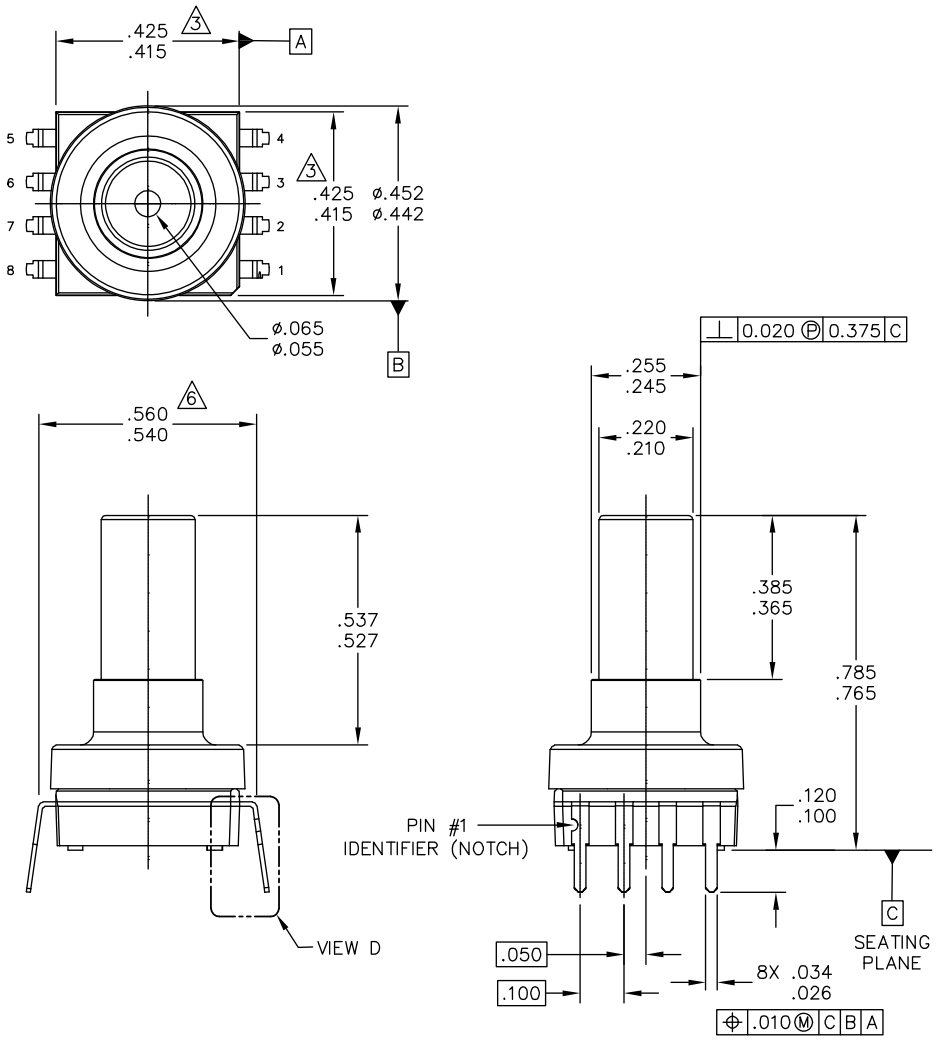


| © FREESCALE SEMICONDUCTOR, INC. ALL RIGHTS RESERVED. | MECHANICAL OUTLINE | PRINT VERSION NOT TO SCALE |
|---|---|---|
| TITLE: SO, 8 I/O, .420 X .420 PKG, .100 IN PITCH | DOCUMENT NO: 98ASA10611D | REV: D |
| | CASE NUMBER: 1560–03 | 25 FEB 2009 |
| | STANDARD: NON–JEDEC | |

PAGE 1 OF 3

**1560-03**
**ISSUE C**
**SMALL OUTLINE PACKAGE**

## PACKAGE DIMENSIONS

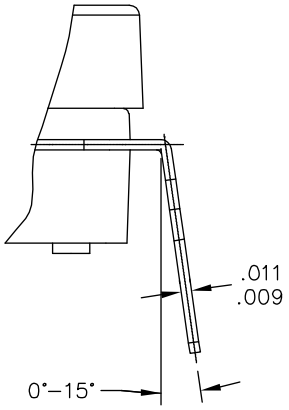


VIEW D

| © FREESCALE SEMICONDUCTOR, INC. ALL RIGHTS RESERVED. | MECHANICAL OUTLINE | PRINT VERSION NOT TO SCALE | |
|---|---|---|---|
| TITLE: SO, 8 I/O, .420 X .420 PKG, .100 IN PITCH | DOCUMENT NO: 98ASA10611D | | REV: D |
| | CASE NUMBER: 1560–03 | | 25 FEB 2009 |
| | STANDARD: NON–JEDEC | | |

PAGE 2 OF 3

**CASE 1560-03**
**ISSUE D**
**SMALL OUTLINE PACKAGE**

# PACKAGE DIMENSIONS

NOTES:

1. DIMENSIONING AND TOLERANCING PER ASME Y14.5M – 1994.
2. CONTROLLING DIMENSION: INCH.
3. DIMENSIONS DO NOT INCLUDE MOLD PROTRUSION.
4. MAXIMUM MOLD PROTRUSION IS .006.
5. ALL VERTICAL SURFACES 5° TYPICAL DRAFT.
6. DIMENSION TO CENTER OF LEAD WHEN FORMED PARALLEL.

| | | | |
|---|---|---|---|
| © FREESCALE SEMICONDUCTOR, INC. ALL RIGHTS RESERVED. | **MECHANICAL OUTLINE** | PRINT VERSION NOT TO SCALE | |
| TITLE: SO, 8 I/O, .420 X .420 PKG, .100 IN PITCH | DOCUMENT NO: 98ASA10611D | | REV: D |
| | CASE NUMBER: 1560–03 | | 25 FEB 2009 |
| | STANDARD: NON–JEDEC | | |

PAGE 3 OF 3

**CASE 1560-03**
**ISSUE D**
**SMALL OUTLINE PACKAGE**

## PACKAGE DIMENSIONS

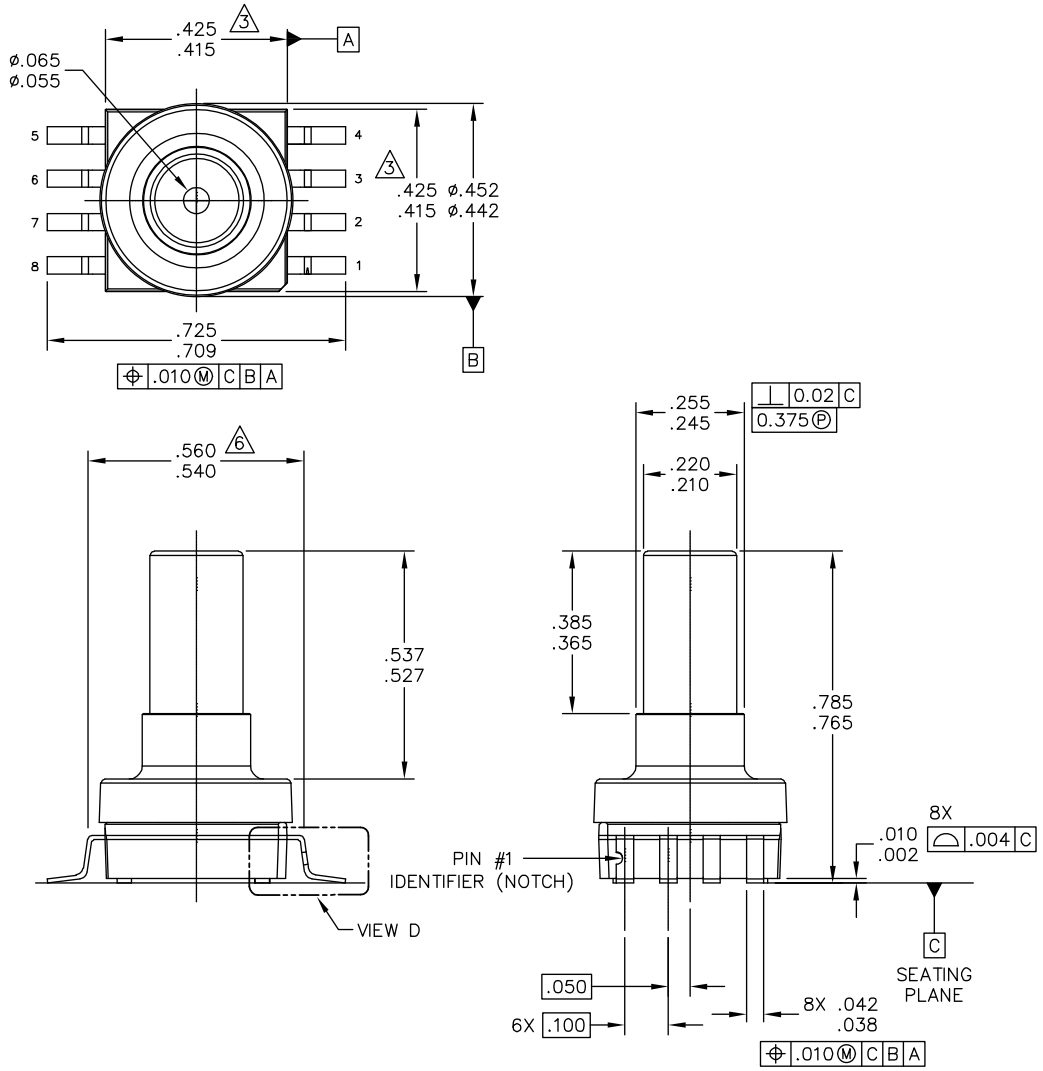


| © FREESCALE SEMICONDUCTOR, INC. ALL RIGHTS RESERVED. | MECHANICAL OUTLINE | PRINT VERSION NOT TO SCALE |
|---|---|---|
| TITLE: SO, 8 I/O, .420 X .420 PKG, .100 IN PITCH | DOCUMENT NO: 98ASA10686D | REV: B |
| | CASE NUMBER: 1735–02 | 19 FEB 2009 |
| | STANDARD: NON–JEDEC | |

PAGE 1 OF 3

**CASE 1735-02**
**ISSUE B**
**SMALL OUTLINE PACKAGE**

## PACKAGE DIMENSIONS

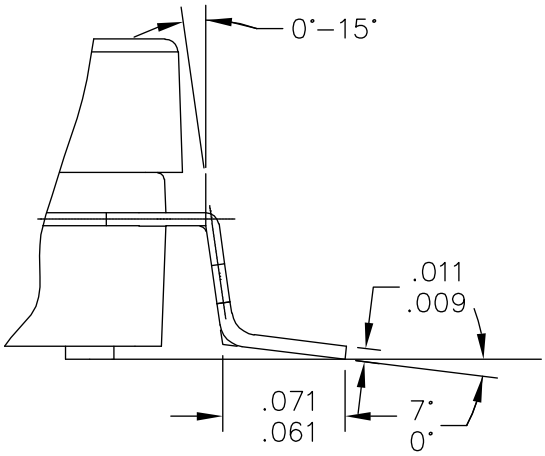


VIEW D

| | | |
|---|---|---|
| © FREESCALE SEMICONDUCTOR, INC. ALL RIGHTS RESERVED. | **MECHANICAL OUTLINE** | PRINT VERSION NOT TO SCALE |
| TITLE: SO, 8 I/O, .420 X .420 PKG, .100 IN PITCH | DOCUMENT NO: 98ASA10686D | REV: B |
| | CASE NUMBER: 1735–02 | 19 FEB 2009 |
| | STANDARD: NON–JEDEC | |

PAGE 2 OF 3

**CASE 1735-02**
**ISSUE B**
**SMALL OUTLINE PACKAGE**

# PACKAGE DIMENSIONS

NOTES:

1. DIMENSIONING AND TOLERANCING PER ASME Y14.5M – 1994.
2. CONTROLLING DIMENSION: INCH.
3. DIMENSIONS DO NOT INCLUDE MOLD PROTRUSION.
4. MAXIMUM MOLD PROTRUSION IS .006.
5. ALL VERTICAL SURFACES 5° TYPICAL DRAFT.
6. DIMENSION TO CENTER OF LEAD WHEN FORMED PARALLEL.

| | | | |
|---|---|---|---|
| © FREESCALE SEMICONDUCTOR, INC. ALL RIGHTS RESERVED. | **MECHANICAL OUTLINE** | PRINT VERSION NOT TO SCALE | |
| TITLE: SO, 8 I/O, .420 X .420 PKG, .100 IN PITCH | DOCUMENT NO: 98ASA10686D | | REV: B |
| | CASE NUMBER: 1735–02 | | 19 FEB 2009 |
| | STANDARD: NON–JEDEC | | |

PAGE 3 OF 3

**CASE 1735-02**
**ISSUE B**
**SMALL OUTLINE PACKAGE**

**Table 3. Revision History**

| Revision number | Revision date | Description of changes |
|---|---|---|
| 13 | 10/2012 | • Deleted references to device number MPVZ5010G6T1, MPVZ5010G6U/T1 and MPVZ5010G6U/6T1 throughout the document |

## *How to Reach Us:*

**Home Page:**
freescale.com

**Web Support:**
freescale.com/support

Information in this document is provided solely to enable system and software implementers to use Freescale products. There are no express or implied copyright licenses granted hereunder to design or fabricate any integrated circuits based on the information in this document.

Freescale reserves the right to make changes without further notice to any products herein. Freescale makes no warranty, representation, or guarantee regarding the suitability of its products for any particular purpose, nor does Freescale assume any liability arising out of the application or use of any product or circuit, and specifically disclaims any and all liability, including without limitation consequential or incidental damages. “Typical” parameters that may be provided in Freescale data sheets and/or specifications can and do vary in different applications, and actual performance may vary over time. All operating parameters, including “typicals,” must be validated for each customer application by customer’s technical experts. Freescale does not convey any license under its patent rights nor the rights of others. Freescale sells products pursuant to standard terms and conditions of sale, which can be found at the following address: freescale.com/salestermsandconditions.

Freescale, the Freescale logo, Energy Efficient Solutions logo, are trademarks of Freescale Semiconductor, Inc., Reg. U.S. Pat. & Tm. Off. Xtrinsic is a trademark of Freescale Semiconductor, Inc. All other product or service names are the property of their respective owners.
© 2012 Freescale Semiconductor, Inc.

MPX5010
Rev. 13
10/2012

# OCEAN CHIPS
## Океан Электроники
### Поставка электронных компонентов

Компания «Океан Электроники» предлагает заключение долгосрочных отношений при поставках импортных электронных компонентов на взаимовыгодных условиях!

Наши преимущества:

- Поставка оригинальных импортных электронных компонентов напрямую с производств Америки, Европы и Азии, а так же с крупнейших складов мира;
- Широкая линейка поставок активных и пассивных импортных электронных компонентов (более 30 млн. наименований);
- Поставка сложных, дефицитных, либо снятых с производства позиций;
- Оперативные сроки поставки под заказ (от 5 рабочих дней);
- Экспресс доставка в любую точку России;
- Помощь Конструкторского Отдела и консультации квалифицированных инженеров;
- Техническая поддержка проекта, помощь в подборе аналогов, поставка прототипов;
- Поставка электронных компонентов под контролем ВП;
- Система менеджмента качества сертифицирована по Международному стандарту ISO 9001;
- При необходимости вся продукция военного и аэрокосмического назначения проходит испытания и сертификацию в лаборатории (по согласованию с заказчиком);
- Поставка специализированных компонентов военного и аэрокосмического уровня качества (Xilinx, Altera, Analog Devices, Intersil, Interpoint, Microsemi, Actel, Aeroflex, Peregrine, VPT, Syfer, Eurofarad, Texas Instruments, MS Kennedy, Miteq, Cobham, E2V, MA-COM, Hittite, Mini-Circuits, General Dynamics и др.);

Компания «Океан Электроники» является официальным дистрибьютором и эксклюзивным представителем в России одного из крупнейших производителей разъемов военного и аэрокосмического назначения **«JONHON»**, а так же официальным дистрибьютором и эксклюзивным представителем в России производителя высокотехнологичных и надежных решений для передачи СВЧ сигналов **«FORSTAR»**.

AVIC JONHON

**«JONHON»** (основан в 1970 г.)

Разъемы специального, военного и аэрокосмического назначения:

(Применяются в военной, авиационной, аэрокосмической, морской, железнодорожной, горно- и нефтедобывающей отраслях промышленности)

**«FORSTAR»** (основан в 1998 г.)

ВЧ соединители, коаксиальные кабели, кабельные сборки и микроволновые компоненты:

(Применяются в телекоммуникациях гражданского и специального назначения, в средствах связи, РЛС, а так же военной, авиационной и аэрокосмической отраслях промышленности).

FORSTAR®

Телефон: 8 (812) 309-75-97 (многоканальный)
Факс: 8 (812) 320-03-32
Электронная почта: ocean@oceanchips.ru
Web: http://oceanchips.ru/
Адрес: 198099, г. Санкт-Петербург, ул. Калинина, д. 2, корп. 4, лит. А