FAIRCHILD SEMICONDUCTOR™

October 1987
Revised May 2002

CD4541BC
Programmable Timer

General Description

The CD4541BC Programmable Timer is designed with a 16-stage binary counter, an integrated oscillator for use with an external capacitor and two resistors, output control logic, and a special power-on reset circuit. The special features of the power-on reset circuit are first, no additional static power consumption and second, the part functions across the full voltage range (3V–15V) whether power-on reset is enabled or disabled.

Timing and the counter are initialized by turning on power, if the power-on reset is enabled. When the power is already on, an external reset pulse will also initialize the timing and counter. After either reset is accomplished, the oscillator frequency is determined by the external RC network. The 16-stage counter divides the oscillator frequency by any of 4 digitally controlled division ratios.

Features

- Available division ratios 2^8, 2^{10}, 2^{13}, or 2^{16}
- Increments on positive edge clock transitions
- Built-in low power RC oscillator (±2% accuracy over temperature range and ±10% supply and ±3% over processing @ < 10 kHz)
- Oscillator frequency range ≈ DC to 100 kHz
- Oscillator may be bypassed if external clock is available (apply external clock to pin 3)
- Automatic reset initializes all counters when power turns on
- External master reset totally independent of automatic reset operation
- Operates at 2^n frequency divider or single transition timer
- $Q/\overline{Q}$ select provides output logic level flexibility
- Reset (auto or master) disables oscillator during resetting to provide no active power dissipation
- Clock conditioning circuit permits operation with very slow clock rise and fall times
- Wide supply voltage range—3.0V to 15V
- High noise immunity—0.45 V_{DD} (typ.)
- 5V–10V–15V parameter ratings
- Symmetrical output characteristics
- Maximum input leakage 1 µA at 15V over full temperature range
- High output drive (pin 8) min. one TTL load

Ordering Code:

Order Number	Package Number	Package Description
CD4541BCM	M14A	14-Lead Small Outline Integrated Circuit (SOIC), JEDEC MS-012, 0.150" Narrow
CD4541BCN	N14A	14-Lead Plastic Dual-In-Line Package (PDIP), JEDEC MS-001, 0.300" Wide

Devices also available in Tape and Reel. Specify by appending the suffix letter "X" to the ordering code.

Connection Diagram

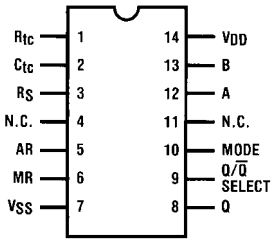

N.C.—Not connected

Top View

© 2002 Fairchild Semiconductor Corporation

Truth Table

Pin	State	
	0	1
5	Auto Reset Operating	Auto Reset Disabled
6	Timer Operational	Master Reset On
9	Output Initially Low after Reset	Output Initially High after Reset
10	Single Cycle Mode	Recycle Mode

Division Ratio Table

A	B	Number of Counter Stages n	Count 2^n
0	0	13	8192
0	1	10	1024
1	0	8	256
1	1	16	65536

Operating Characteristics

With Auto Reset pin set to a “0” the counter circuit is initialized by turning on power. Or with power already on, the counter circuit is reset when the Master Reset pin is set to a “1”. Both types of reset will result in synchronously resetting all counter stages independent of counter state.

The RC oscillator frequency is determined by the external RC network, i.e.:

$$f = \frac{1}{2.3\, R_{tc} C_{tc}} \text{ if } (1\text{ kHz} \le f \le 100\text{ kHz})$$

and $R_S \approx 2\, R_{tc}$ where $R_S \ge 10\text{ k}\Omega$

The time select inputs (A and B) provide a two-bit address to output any one of four counter stages (2^8, 2^{10}, 2^{13}, and 2^{16}). The 2^n counts as shown in the Division Ratio Table represent the Q output of the Nth stage of the counter. When A is “1”, 2^{16} is selected for both states of B.

However, when B is “0”, normal counting is interrupted and the 9th counter stage receives its clock directly from the oscillator (i.e., effectively outputting 2^8).

The Q/$\overline{Q}$ select output control pin provides for a choice of output level. When the counter is in a reset condition and Q/$\overline{Q}$ select pin is set to a “0” the Q output is a “0”. Correspondingly, when Q/$\overline{Q}$ select pin is set to a “1” the Q output is a “1”.

When the mode control pin is set to a “1”, the selected count is continually transmitted to the output. But, with mode pin “0” and after a reset condition the RS flip-flop resets (see Logic Diagram), counting commences and after 2^{n-1} counts the RS flip-flop sets which causes the output to change state. Hence, after another 2^{n-1} counts the output will not change. Thus, a Master Reset pulse must be applied or a change in the mode pin level is required to reset the single cycle operation.

Typical RC Oscillator Characteristics

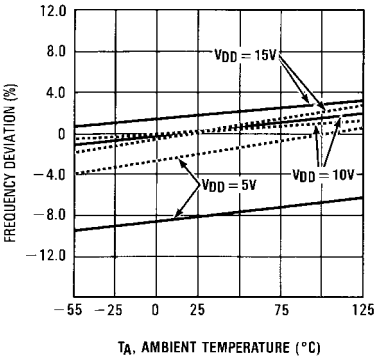

Solid Line = R_{TC} = 56 kΩ, R_S = 1 kΩ and C = 1000 pF

f = 10.2 kHz @ V_{DD} = 10V and T_A = 25°

Dashed Line = R_{TC} = 56 kΩ, R_S = 120 kΩ and C = 1000 pF

f = 7.75 kHz @ V_{DD} = 10V and T_A = 25°

RC Oscillator Frequency as a Function of R_{TC} and C

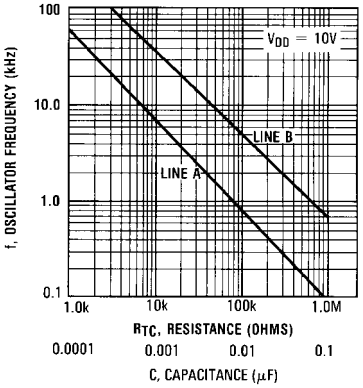

Line A: f as a function of C and (R_{TC} = 56 kΩ; R_S = 120k

Line B: f as a function of R_{TC} and (C = 100 pF; R_S = 2 R_{TC}

Operating Characteristics (Continued)

Oscillator Circuit Using RC Configuration

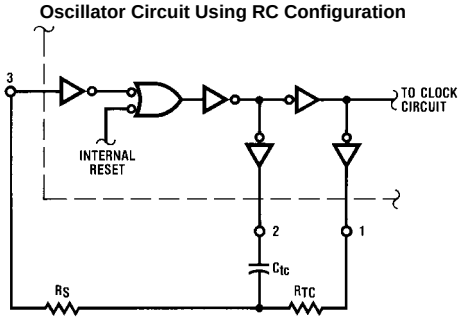

Logic Diagram

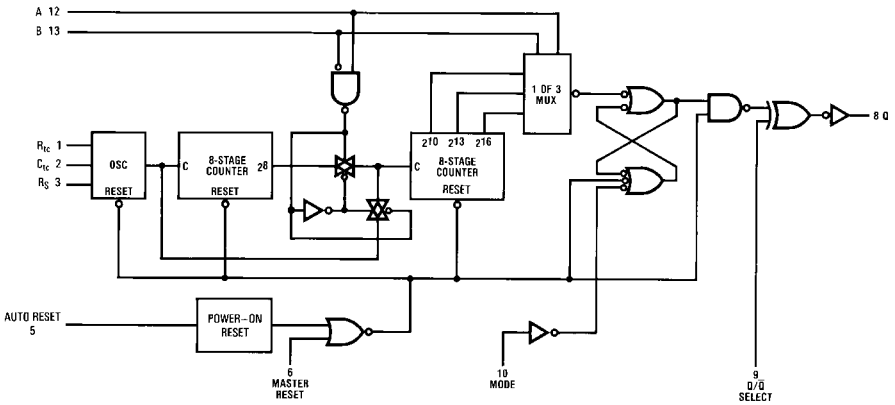

V_{DD} = Pin 14

V_{SS} = Pin 7

Absolute Maximum Ratings (Note 1)

(Note 2)

Supply Voltage (V_{DD})	−0.5V to +18V
Input Voltage (V_{IN})	−0.5V to V_{DD} +0.5V
Storage Temperature Range (T_S)	−65°C to +150°C
Power Dissipation (P_D)	
Dual-In-Line	700 mW
Small Outline	500 mW
Lead Temperature (T_L)	
(soldering, 10 seconds)	260°C

Recommended Operating Conditions (Note 2)

Supply Voltage (V_{DD})	3V to 15V
Input Voltage (V_{IN})	0 to V_{DD}
Operating Temperature Range	−55°C to +125°C

Note 1: "Absolute Maximum Ratings" are those values beyond which the safety of the device cannot be guaranteed. Except for "Operating Temperature Range" they are not meant to imply that the devices should be operated at these limits. The table of "Electrical Characteristics" provides conditions for actual device operation.

Note 2: V_{SS} = 0V unless otherwise specified.

DC Electrical Characteristics (Note 2)

Symbol	Parameter	Conditions	−55°C		+25°C			+125°C		Units
			Min	Max	Min	Typ	Max	Min	Max	
I_{DD}	Quiescent Device Current	V_{DD} = 5V, V_{IN} = V_{DD} or V_{SS}		5		0.005	5		150	µA
		V_{DD} = 10V, V_{IN} = V_{DD} or V_{SS}		10		0.010	10		300	
		V_{DD} = 15V, V_{IN} = V_{DD} or V_{SS}		20		0.015	20		600	
V_{OL}	LOW Level Output Voltage	V_{DD} = 5V		0.05		0	0.05		0.05	V
		V_{DD} = 10V $\lvert I_O \rvert$ < 1µA		0.05		0	0.05		0.05	
		V_{DD} = 15V		0.05		0	0.05		0.05	
V_{OH}	HIGH Level Output Voltage	V_{DD} = 5V	4.95		4.95	5		4.95		V
		V_{DD} = 10V $\lvert I_O \rvert$ < 1 µA	9.95		9.95	10		9.95		
		V_{DD} = 15V	14.95		14.95	15		14.95		
V_{IL}	LOW Level Input Voltage	V_{DD} = 5V, V_O = 0.5V or 4.5V		1.5		2	1.5		1.5	V
		V_{DD} = 10V, V_O = 1.0V or 9.0V		3.0		4	3.0		3.0	
		V_{DD} = 15V, V_O = 1.5V or 13.5V		4.0		6	4.0		4.0	
V_{IH}	HIGH Level Input Voltage	V_{DD} = 5V, V_O = 0.5V or 4.5V	3.5		3.5	3		3.5		V
		V_{DD} = 10V, V_O = 1.0V or 9.0V	7.0		7.0	6		7.0		
		V_{DD} = 15V, V_O = 1.5V or 13.5V	11.0		11.0	9		11.0		
I_{OL}	LOW Level Output Current (Note 3)	V_{DD} = 5V, V_O = 0.4V	2.85		2.27	3.6		1.6		mA
		V_{DD} = 10V, V_O = 0.5V	4.16		4.0	9.0		2.8		
		V_{DD} = 15V, V_O = 1.5V	19.3		15.6	34.0		10.9		
I_{OH}	HIGH Level Output Current (Note 3)	V_{DD} = 5V, V_O = 2.5V	7.96		6.42	130		4.49		mA
		V_{DD} = 10V, V_O = 9.5V	4.19		3.38	8.0		2.37		
		V_{DD} = 15V, V_O = 13.5V	16.3		13.2	30.0		9.24		
I_{IN}	Input Current	V_{DD} = 15V, V_{IN} = 0V		−0.1		-10^{-5}	−0.1		−1.0	µA
		V_{DD} = 15V, V_{IN} = 15V		0.1		10^{-5}	0.1		1.0	

Note 3: I_{OH} and I_{OL} are tested one output at a time.

AC Electrical Characteristics (Note 4)

$T_A = 25°C$, $C_L = 50$ pF (refer to test circuits)

Symbol	Parameter	Conditions	Min	Typ	Max	Units
t_{TLH}	Output Rise Time	$V_{DD} = 5V$		50	200	
		$V_{DD} = 10V$		30	100	ns
		$V_{DD} = 15V$		25	80	
t_{THL}	Output Fall Time	$V_{DD} = 5V$		50	200	
		$V_{DD} = 10V$		30	100	ns
		$V_{DD} = 15V$		25	80	
t_{PLH}, t_{PHL}	Turn-Off, Turn-On Propagation Delay,	$V_{DD} = 5V$		1.8	4.0	
	Clock to Q (2^8 Output)	$V_{DD} = 10V$		0.6	1.5	µs
		$V_{DD} = 15V$		0.4	1.0	
t_{PHL}, t_{PLH}	Turn-On, Turn-Off Propagation Delay,	$V_{DD} = 5V$		3.2	8.0	
	Clock to Q (2^{16} Output)	$V_{DD} = 10V$		1.5	3.0	µs
		$V_{DD} = 15V$		1.0	2.0	
$t_{WH(CL)}$	Clock Pulse Width	$V_{DD} = 5V$	400	200		
		$V_{DD} = 10V$	200	100		ns
		$V_{DD} = 15V$	150	70		
f_{CL}	Clock Pulse Frequency	$V_{DD} = 5V$		2.5	1.0	
		$V_{DD} = 10V$		6.0	3.0	MHz
		$V_{DD} = 15V$		8.5	4.0	
$t_{WH(R)}$	MR Pulse Width	$V_{DD} = 5V$	400	170		
		$V_{DD} = 10V$	200	75		ns
		$V_{DD} = 15V$	150	50		
C_I	Average Input Capacitance	Any Input		5.0	7.5	pF
C_{PD}	Power Dissipation Capacitance (Note 5)			100		pF

Note 4: AC Parameters are guaranteed by DC correlated testing.

Note 5: C_{PD} determines the no load AC power consumption of any CMOS device. For complete explanation, see Family Characteristics application note: AN-90.

Test Circuits and Waveforms

Power Dissipation Test Circuit and Waveforms

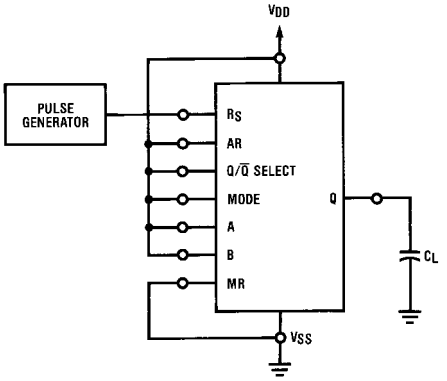

Switching Time Test Circuit and Waveforms

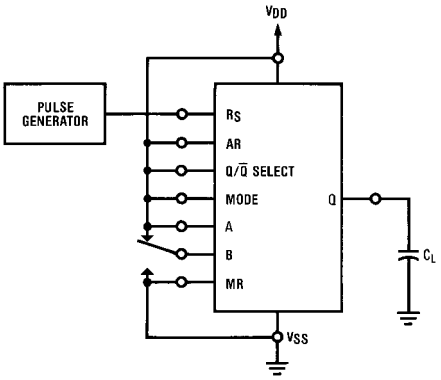

(R_{tc} and C_{tc} outputs are left open)

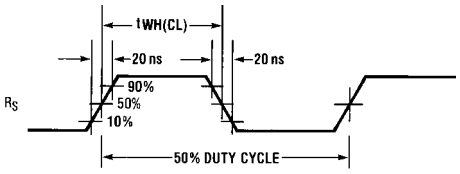

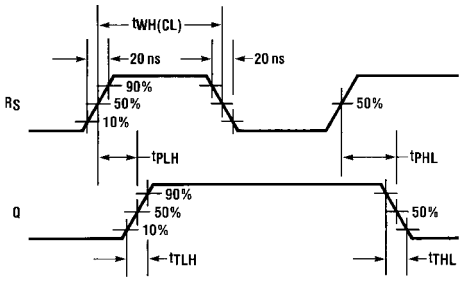

Physical Dimensions inches (millimeters) unless otherwise noted

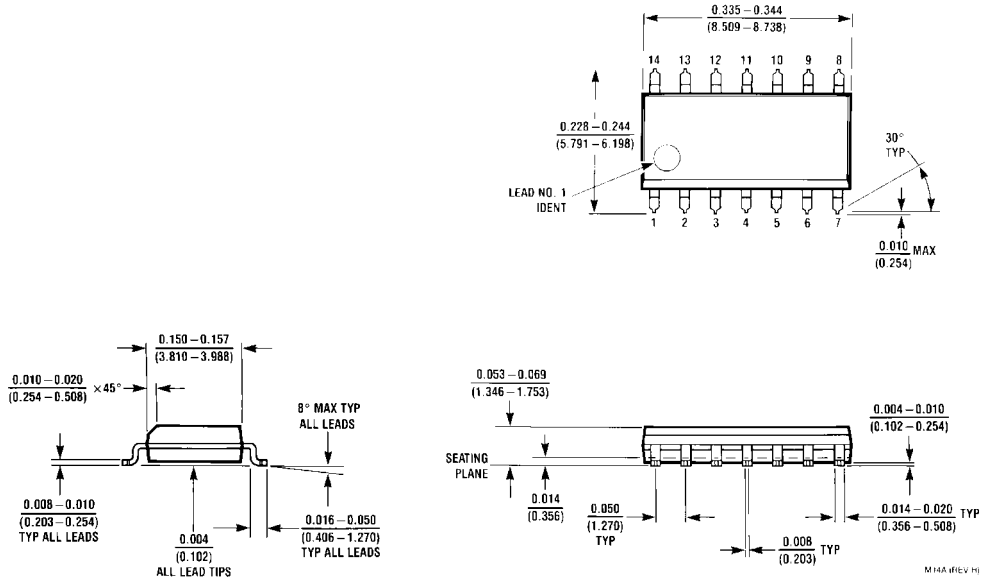

16-Lead Small Outline Integrated Circuit (SOIC), JEDEC MS-012, 0.150" Narrow
Package Number M16A

Physical Dimensions inches (millimeters) unless otherwise noted (Continued)

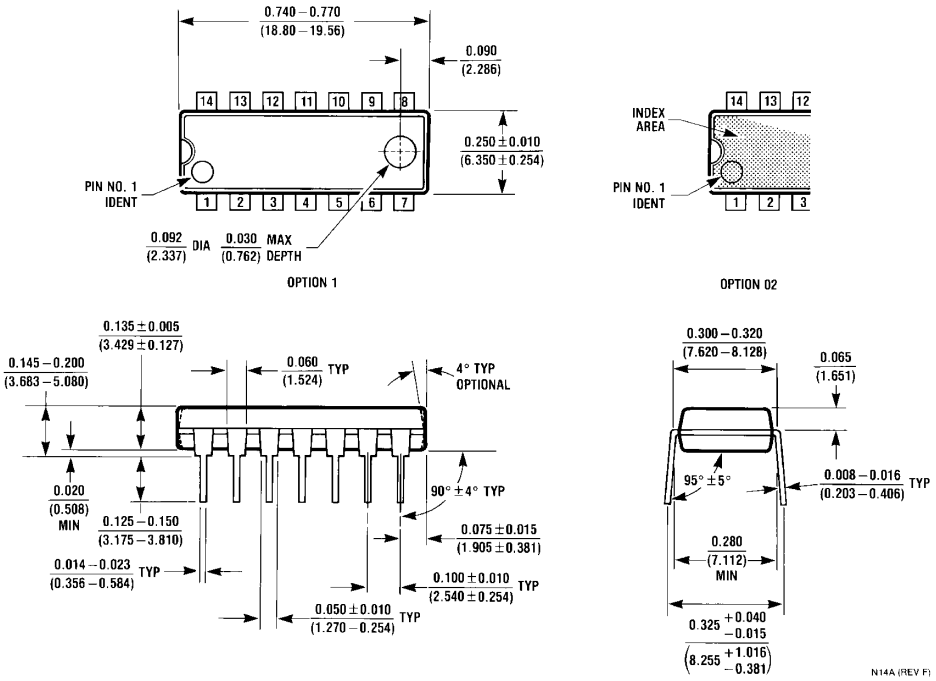

14-Lead Plastic Dual-In-Line Package (PDIP), JEDEC MS-001, 0.300" Wide
Package Number N14A

Fairchild does not assume any responsibility for use of any circuitry described, no circuit patent licenses are implied and Fairchild reserves the right at any time without notice to change said circuitry and specifications.

LIFE SUPPORT POLICY

FAIRCHILD'S PRODUCTS ARE NOT AUTHORIZED FOR USE AS CRITICAL COMPONENTS IN LIFE SUPPORT DEVICES OR SYSTEMS WITHOUT THE EXPRESS WRITTEN APPROVAL OF THE PRESIDENT OF FAIRCHILD SEMICONDUCTOR CORPORATION. As used herein:

1. Life support devices or systems are devices or systems which, (a) are intended for surgical implant into the body, or (b) support or sustain life, and (c) whose failure to perform when properly used in accordance with instructions for use provided in the labeling, can be reasonably expected to result in a significant injury to the user.
2. A critical component in any component of a life support device or system whose failure to perform can be reasonably expected to cause the failure of the life support device or system, or to affect its safety or effectiveness.

www.fairchildsemi.com

OCEAN CHIPS
Океан Электроники
Поставка электронных компонентов

Компания «Океан Электроники» предлагает заключение долгосрочных отношений при поставках импортных электронных компонентов на взаимовыгодных условиях!

Наши преимущества:

- Поставка оригинальных импортных электронных компонентов напрямую с производств Америки, Европы и Азии, а так же с крупнейших складов мира;
- Широкая линейка поставок активных и пассивных импортных электронных компонентов (более 30 млн. наименований);
- Поставка сложных, дефицитных, либо снятых с производства позиций;
- Оперативные сроки поставки под заказ (от 5 рабочих дней);
- Экспресс доставка в любую точку России;
- Помощь Конструкторского Отдела и консультации квалифицированных инженеров;
- Техническая поддержка проекта, помощь в подборе аналогов, поставка прототипов;
- Поставка электронных компонентов под контролем ВП;
- Система менеджмента качества сертифицирована по Международному стандарту ISO 9001;
- При необходимости вся продукция военного и аэрокосмического назначения проходит испытания и сертификацию в лаборатории (по согласованию с заказчиком);
- Поставка специализированных компонентов военного и аэрокосмического уровня качества (Xilinx, Altera, Analog Devices, Intersil, Interpoint, Microsemi, Actel, Aeroflex, Peregrine, VPT, Syfer, Eurofarad, Texas Instruments, MS Kennedy, Miteq, Cobham, E2V, MA-COM, Hittite, Mini-Circuits, General Dynamics и др.);

Компания «Океан Электроники» является официальным дистрибьютором и эксклюзивным представителем в России одного из крупнейших производителей разъемов военного и аэрокосмического назначения **«JONHON»**, а так же официальным дистрибьютором и эксклюзивным представителем в России производителя высокотехнологичных и надежных решений для передачи СВЧ сигналов **«FORSTAR»**.

AVIC JONHON

«JONHON» (основан в 1970 г.)

Разъемы специального, военного и аэрокосмического назначения:

(Применяются в военной, авиационной, аэрокосмической, морской, железнодорожной, горно- и нефтедобывающей отраслях промышленности)

«FORSTAR» (основан в 1998 г.)

ВЧ соединители, коаксиальные кабели, кабельные сборки и микроволновые компоненты:

(Применяются в телекоммуникациях гражданского и специального назначения, в средствах связи, РЛС, а так же военной, авиационной и аэрокосмической отраслях промышленности).

FORSTAR®

Телефон: 8 (812) 309-75-97 (многоканальный)
Факс: 8 (812) 320-03-32
Электронная почта: ocean@oceanchips.ru
Web: http://oceanchips.ru/
Адрес: 198099, г. Санкт-Петербург, ул. Калинина, д. 2, корп. 4, лит. А