APDS-9190

Digital Proximity Sensor

Data Sheet

Description

The APDS-9190 provides IR LED and a complete digital proximity detection system in a single 8 pin package. The proximity function offers plug and play detection to 100 mm (without front glass) thus eliminating the need for factory calibration of the end equipment or sub-assembly. The proximity detection feature operates well from bright sunlight to dark rooms. The wide dynamic range also allows for operation in short distance detection behind dark glass such as a cell phone.

The proximity function is targeted specifically towards near field proximity applications. In cell phones, the proximity detection can detect when the user positions the phone close to their ear. The device is fast enough to provide proximity information at a high repetition rate needed when answering a phone call. This provides both improved "green" power saving capability and the added security to lock the computer when the user is not present. The addition of the micro-optics lenses within the module, provide highly efficient transmission and reception of infrared energy which lowers overall power dissipation.

Ordering Information

Part Number	Packaging	Quantity
APDS-9190	Tape & Reel	2500 per reel

Features

- IR LED and Proximity Detector in an Optical Module
- Proximity Detection
  - Fully Calibrated to 100 mm Detection
  - Integrated IR LED and Synchronous LED Driver
  - Eliminates "Factory Calibration" of Prox
  - Covers a 2000: 1 Dynamic Range
- Programmable Wait Timer
  - Wait State Power – 70 µA Typical
  - Programmable from 2.72 ms to > 6 Sec
- I^2C Interface Compatible
  - Up to 400 kHz (I^2C Fast-Mode)
  - Dedicated Interrupt Pin
- Sleep Mode Power - 2.5 µA Typical
- Small Package L3.94 x W2.36 x H1.35 mm

Applications

- Cell Phone Touch-screen Disable
- Notebook/Monitor Security
- Automatic Speakerphone Enable
- Automatic Menu Pop-up
- Digital Camera Eye Sensor

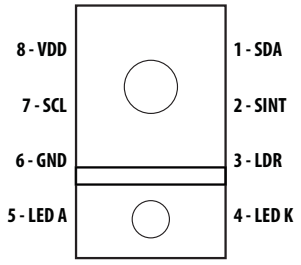

Functional Block Diagram

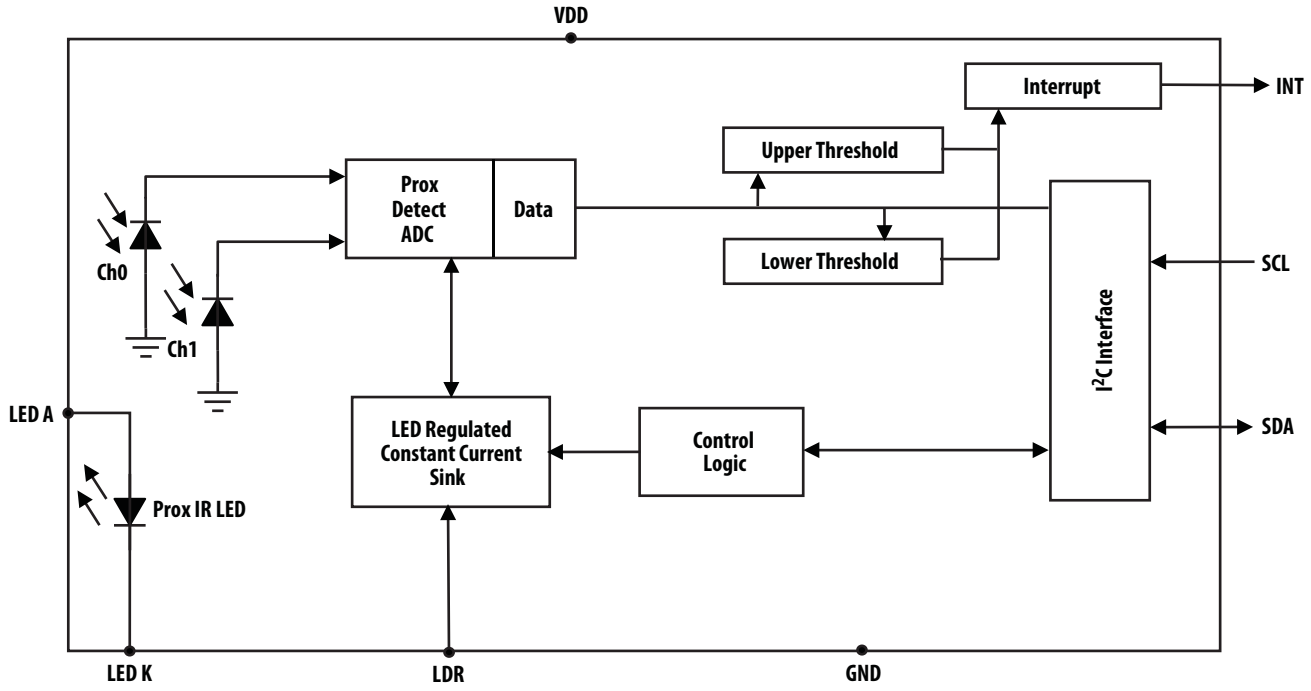

Detailed Description

The APDS-9190 light-to-digital device provides on-chip Ch0 and CH1 diodes, integrating amplifiers, ADCs, accumulators, clocks, buffers, comparators, a state machine and an I^2C interface. Each device combines one Ch0 photodiode (visible plus infrared) and one infrared-responding (IR) photodiode. Two integrating ADCs simultaneously convert the amplified photodiode currents to a digital value providing up to 16-bits of resolution. Upon completion of the conversion cycle, the conversion result is transferred to the Ch0 and IR data registers. This digital output can be read by a microprocessor.

Communication to the device is accomplished through a fast (up to 400 kHz), two-wire I^2C serial bus for easy connection to a microcontroller or embedded controller. The digital output of the APDS-9190 device is inherently more immune to noise when compared to an analog interface.

The APDS-9190 provides a separate pin for level-style interrupts. When interrupts are enabled and a pre-set value is exceeded, the interrupt pin is asserted and remains asserted until cleared by the controlling firmware.

The interrupt feature simplifies and improves system efficiency by eliminating the need to poll a sensor for a proximity value. An interrupt is generated when the value of proximity conversion exceeds either an upper or lower threshold. Additionally, a programmable interrupt persistence feature allows the user to determine how many consecutive exceeded thresholds are necessary to trigger an interrupt. Interrupt thresholds and persistence settings are configured independently for proximity.

Proximity detection is fully provided with an 850 nm IR LED. An internal LED driver (LDR) pin, is jumper connected to the LED cathode (LED K) to provide a factory calibrated proximity of 100 +/- 20 mm. This is accomplished with a proprietary current calibration technique that accounts for all variances in silicon, optics, package and most importantly IR LED output power. This will eliminate or greatly reduce the need for factory calibration that is required for most discrete proximity sensor solutions. While the APDS-9190 is factory calibrated at a given pulse count, the number of proximity LED pulses can be programmed from 1 to 255 pulses, which will allow greater proximity distances to be achieved. Each pulse has a 16 µs period.

I/O Pins Configuration

Pin	Name	Type	Description
1	SDA	I/O	I^2C serial data I/O terminal – serial data I/O for I^2C.
2	INT	O	Interrupt – open drain.
3	LDR	I	LED driver for proximity emitter – up to 100 mA, open drain.
4	LEDK	O	LED Cathode, connect to LDR pin in most systems to use internal LED driver circuit
5	LEDA	I	LED Anode, connect to VBATT on PCB
6	GND		Power supply ground. All voltages are referenced to GND.
7	SCL	I	I^2C serial clock input terminal – clock signal for I^2C serial data.
8	VDD		Power Supply voltage.

Absolute Maximum Ratings over operating free-air temperature range (unless otherwise noted)†

Parameter	Symbol	Min	Max	Units	Conditions
Power Supply voltage	V_{DD}		3.8	V	1
Digital voltage range		-0.5	3.8	V	
Digital output current	I_O	-1	20	mA	
Storage temperature range	Tstg	-40	85	°C	

† Stresses beyond those listed under "absolute maximum ratings" may cause permanent damage to the device. These are stress ratings only and functional operation of the device at these or any other conditions beyond those indicated under "recommended operating conditions" is not implied. Exposure to absolute-maximum-rated conditions for extended periods may affect device reliability.

Note:
1. All voltages are with respect to GND.

Recommended Operating Conditions

Parameter	Symbol	Min	Typ	Max	Units
Operating Ambient Temperature	T_A	-30		85	°C
Supply voltage	V_{DD}	2.5	3.0	3.6	V
Interface Bus Power Supply Voltage	V_{BUS}		1.8		V
Supply Voltage Accuracy, V_{DD} total error including transients		-3		+3	%
LED Supply Voltage	V_{BATT}	2.5		4.5	V

Operating Characteristics, V_{DD} = 3 V, T_A = 25° C (unless otherwise noted)

Parameter	Symbol	Min	Typ	Max	Units	Test Conditions
Supply current [1]	I_{DD}		175	250	µA	Active
			70			Wait Mode
			2.5	4.0		Sleep Mode
INT SDA output low voltage	V_{OL}	0		0.4	V	3 mA sink current
		0		0.6		6 mA sink current
Leakage current, SDA, SCL, INT Pins	I_{LEAK}	-5		5	µA	
SCL, SDA input high voltage	V_{IH}	1.25			V	
SCL, SDA input low voltage	V_{IL}			0.54	V	
Oscillator frequency	fosc	705	750	795	kHz	PON = 1

Note:
1. The power consumption is raised by the programmed amount of Proximity LED Drive during the 8 us the LED pulse is on. The nominal and maximum values are shown under Proximity Characteristics. There the I_{DD} supply current is I_{DD} Active + Proximity LED Drive programmed value.

Proximity Characteristics, V_{DD} = 3 V, T_A = 25° C, PGAIN=1, PEN = 1 (unless otherwise noted)

Parameter	Symbol	Min	Typ	Max	Units	Test Conditions
Supply current – LDR Pulse On	I_{DD}		3		mA	
ADC Conversion Time Step Size			2.72		ms	PTIME = 0xff
ADC Number of Integration Steps			1		steps	PTIME = 0xff
Full Scale ADC Counts per Steps				1023	counts	PTIME = 0xff
Proximity IR LED Pulse Count		0		255	pulses	
Proximity Pulse Period			16.3		µs	
Proximity Pulse – LED On Time			7.2		µs	
Proximity LED Drive			100		mA	PDRIVE=0 I_{SINK} Sink current @ 600 mV, LDR Pin
			50			PDRIVE =1
			25			PDRIVE =2
			12.5			PDRIVE =3
Proximity ADC count value, no object			100			LED driving 8 pulses, PDRIVE = 0, open view (no glass) and no reflective object above the module.
Proximity ADC Count Value		416	520	624	counts	Reflecting object – 73 x 83 mm Kodak 90% grey card, 100 mm distance, LED driving 8 pulses, PDRIVE = 0, open view (no glass) above the module.

IR LED Characteristics, V_{DD} = 3 V, T_A = 25° C

Parameter	Symbol	Min	Typ	Max	Units	Test Conditions
Forward Voltage	V_F		1.4	1.5	V	I_F = 20 mA
Reverse Voltage	V_R	5			V	I_R = 10 µA
Radiant Power	P_O	4.5			mW	I_F = 20 mA
Peak Wavelength	λ_P		850		nm	I_F = 20 mA
Spectrum Width, Half Power	$\Delta\lambda$		40		nm	I_F = 20 mA
Optical Rise Time	T_R		20		ns	I_F = 100 mA
Optical Fall Time	T_F		20		ns	I_F = 100 mA

Wait Characteristics, V_{DD} = 3 V, T_A = 25° C, WEN = 1 (unless otherwise noted)

Parameter	Min	Typ	Max	Units	Test Conditions
Wait Step Size		2.72		ms	WTIME = 0xff
Wait Number of Step	1		256	steps	

Characteristics of the SDA and SCL bus lines, V_{DD} = 3 V, T_A = 25° C (unless otherwise noted) †

Parameter	Symbol	Standard-mode Min.	Standard-mode Max.	Fast-mode Min.	Fast-mode Max.	Unit
SCL clock frequency	f_{SCL}	0	100	0	400	kHz
Hold time (repeated) START condition. After this period, the first clock pulse is generated	$t_{HD;STA}$	4.0	–	0.6	–	µs
LOW period of the SCL clock	t_{LOW}	4.7	–	1.3	–	µs
HIGH period of the SCL clock	t_{HIGH}	4.0	–	0.6	–	µs
Set-up time for a repeated START condition	$t_{SU;STA}$	4.7	–	0.6	–	µs
Data hold time:	$t_{HD;DAT}$	0	–	0	–	ns
Data set-up time	$t_{SU;DAT}$	250	–	100	–	ns
Rise time of both SDA and SCL signals	t_r	–	1000	–	300	ns
Fall time of both SDA and SCL signals	t_f	–	300		300	ns
Set-up time for STOP condition	$t_{SU;STO}$	4.0	–	0.6	–	µs
Bus free time between a STOP and START condition	t_{BUF}	4.7	–	1.3	–	µs
Capacitive load for each bus line	Cb	–	400	–	400	pF
Noise margin at the LOW level for each connected device (including hysteresis)	V_{nL}	0.1 V_{BUS}	–	0.1 V_{BUS}	–	V
Noise margin at the HIGH level for each connected device (including hysteresis)	V_{nH}	0.2 V_{BUS}	–	0.2 V_{BUS}	–	V

† Specified by design and characterization; not production tested.

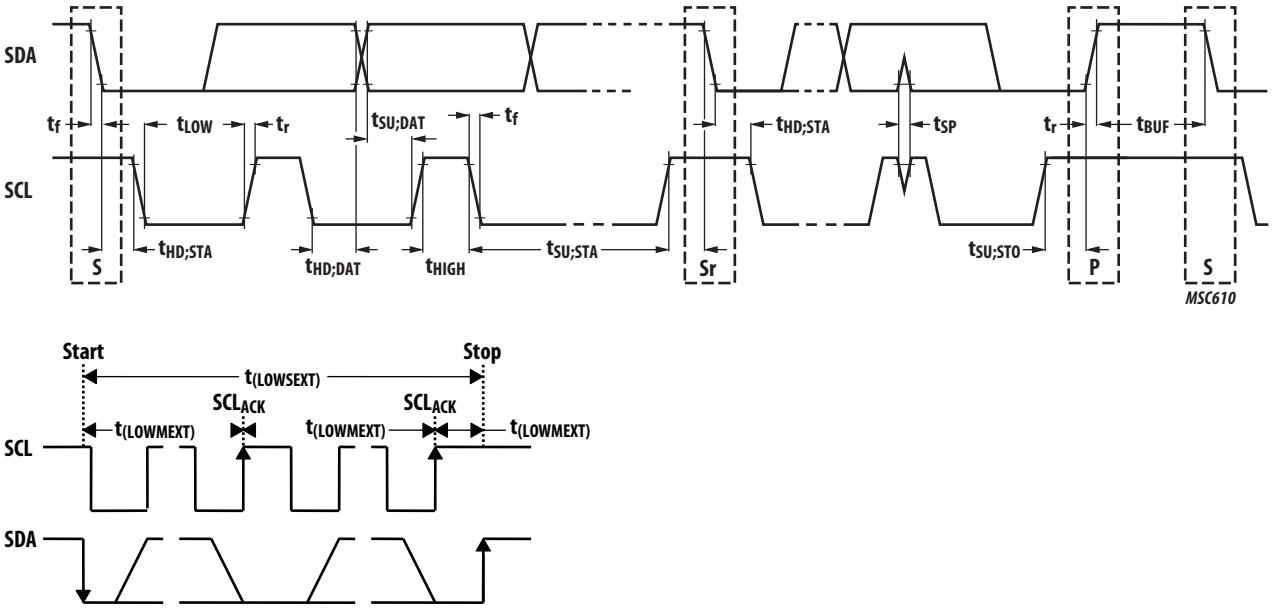

Figure 1. I²C Bus Timing Diagram

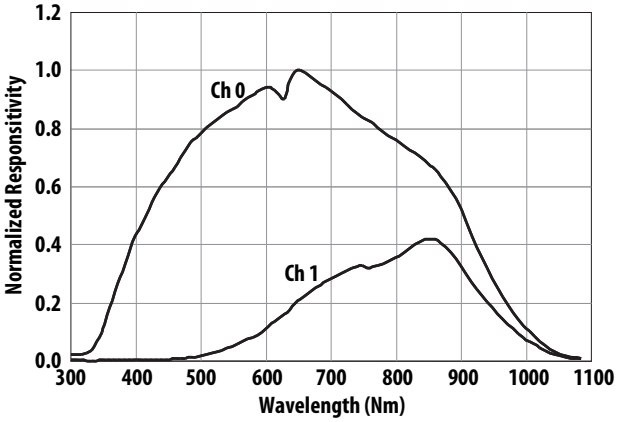

Figure 2. Spectral Responsivity

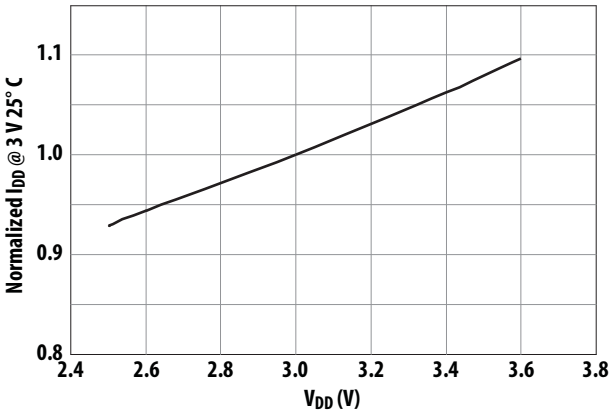

Figure 3. Normalized I_{DD} vs. V_{DD}

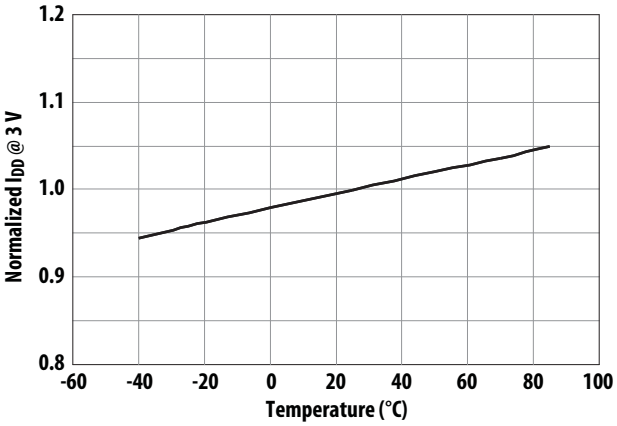

Figure 4. Normalized I_{DD} vs. Temperature

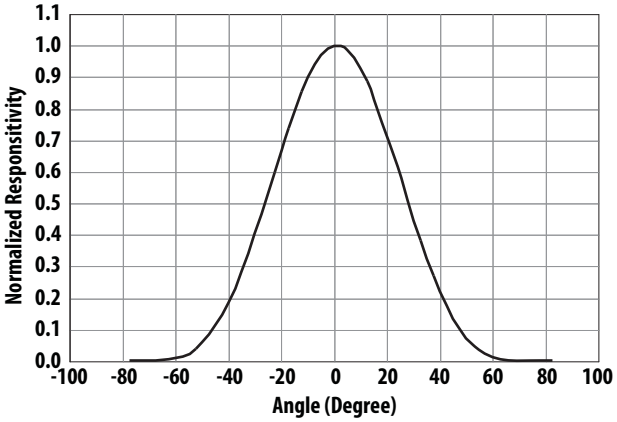

Figure 5a. Normalized Pd Responsivity vs. Angular Displacement

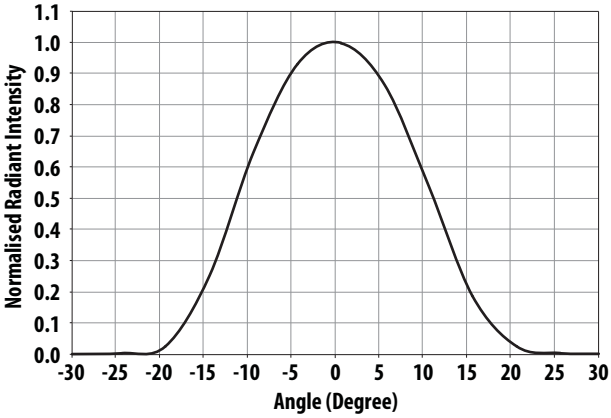

Figure 5b. Normalized LED Angular Emitting Profile

Principles of Operation

System State Machine

The APDS-9190 provides control of proximity detection and power management functionality through an internal state machine. After a power-on-reset, the device is in the sleep mode. As soon as the PON bit is set, the device will move to the start state. It will then continue through the Prox and Wait states. If these states are enabled, the device will execute each function. If the PON bit is set to a 0, the state machine will continue until all conversions are completed and then go into a low power sleep mode.

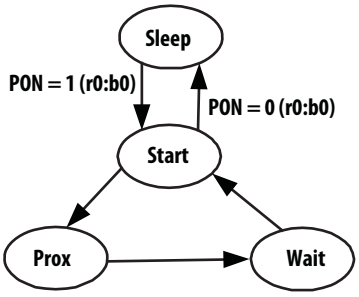

Note: In this document, the nomenclature uses the bit field name in italics followed by the register number and bit number to allow the user to easily identify the register and bit that controls the function. For example, the power on (PON) is in register 0, bit 0. This is represented as PON (r0:b0).

Figure 6. Simplified State Diagram

Proximity Detection

Proximity sensing uses an internal IR LED light source to emit light which is then viewed by the integrated light detector to measure the amount of reflected light when an object is in the light path. The amount of light detected from a reflected surface can then be used to determine an object's proximity to the sensor. The APDS-9190 is factory calibrated to meet the requirement of proximity sensing of 100 +/- 20 mm, thus eliminating the need for factory calibration of the end equipment. When the APDS-9190 is placed behind a typical glass surface, the proximity detection achieved is around 25 to 40 mm, thus providing an ideal touch-screen disable.

The APDS-9190 has controls for the number of IR pulses (PPCOUNT), the integration time (PTIME), the LED drive current (PDRIVE) and the photodiode configuration (PDIODE). The photodiode configuration can be set to no diode (test mode), infrared diode (recommended), Ch0 diode or a combination of both diodes. At the end of the integration cycle, the results are latched into the proximity data (PDATA) register.

The LED drive current is controlled by a regulated current sink on the LDR pin. This feature eliminates the need to use a current limiting resistor to control LED current. The LED drive current can be configured for 12.5 mA, 25 mA, 50 mA, or 100mA. For higher LED drive requirements, an external P type transistor can be used to control the LED current.

The number of LED pulses can be programmed to a value of 1 to 255 pulses as needed. Increasing the number of LED pulses at a given current will increase the sensor sensitivity. Sensitivity grows by the square root of the number of pulses. Each pulse has a 16 µS period.

The proximity integration time (PTIME) is the period of time that the internal ADC converts the analog signal to a digital count. It is recommend that this be set to a minimum of PTIME = 0xFF or 2.72 ms.

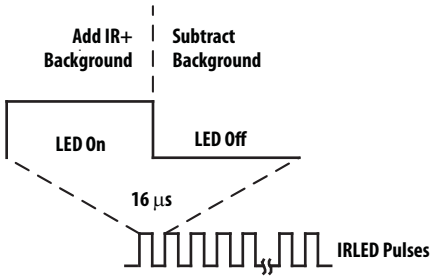

Figure 7. Proximity IR LED Waveform

Optical Design Considerations

The APDS-9190 simplifies the optical system design by eliminating the need for light pipes and improves system optical efficiency by providing apertures and package shielding which will reduce crosstalk when placed in the final system. By reducing the IR LED to glass surface crosstalk, proximity performance is greatly improved and enables a wide range of cell phone applications utilizing the APDS-9190. The module package design has been optimized for minimum package foot print and short distance proximity of 100 mm typical. The spacing between the glass surface and package top surface is critical to controlling the crosstalk. If the package to top surface spacing gap, window thickness and transmittance are met, there should be no need to add additional components (such as a barrier) between the LED and photodiode. Thus with some simple mechanical design implementations, the APDS-9190 will perform will in the end equipment system.

The APDS-9190 is available in a low profile package that contains optics which provides optical gain on both the LED and the sensor side of the package. The device has a package Z height of 1.35 mm and will support air gap of < = 0.5 mm between the glass and the package. The assumption of the optical system level design is that glass surface above the module is < = to 1.0 mm.

By integrating the micro-optics in the package, the IR energy emitted can be reduced thus conserving the precious battery life in the application.

The system designer has the ability to optimize their designs for slim form factor Z height as well as improve the proximity sensing, save battery power and disable the touch screen in a cellular phone.

APDS-9190 Module Optimized design parameters

- Window thickness, t ≤ 1.0 mm
- Air gap, g ≤ 0.5 mm
- Assuming window IR transmittance 90%

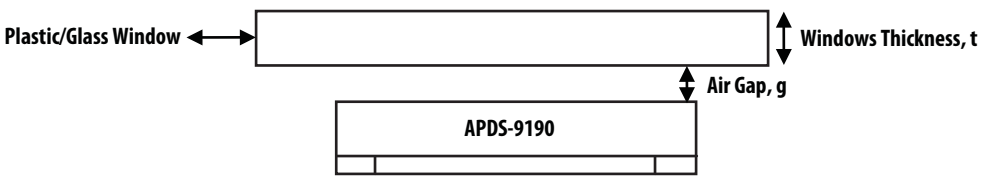

Figure 8. Proximity Detection

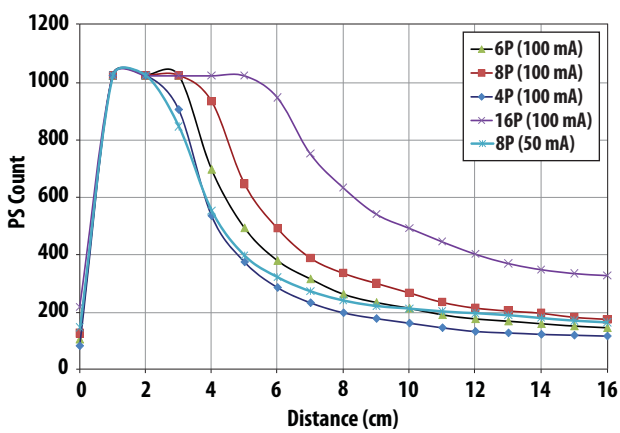

Figure 9a. PS Output vs. Distance, at Various Pulse number (LED drive Current). No glass in front of the module, 18% Kodak Grey Card

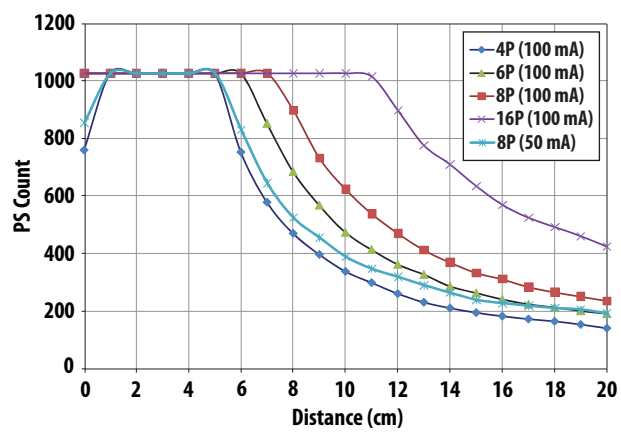

Figure 9b. PS Output vs. Distance, at Various Pulse number (LED drive Current). No glass in front of the module, 90% Kodak Grey Card

Interrupts

The interrupt feature of the APDS-9190 simplifies and improves system efficiency by eliminating the need to poll the sensor for a light intensity or proximity value. The interrupt mode is determined by the PIEN or AIEN field in the ENABLE register.

The APDS-9190 implements four 16-bit-wide interrupt threshold registers that allow the user to define thresholds above and below a desired light level. An interrupt can be generated when the proximity data (PDATA) exceeds the upper threshold value (PIHTx) or falls below the lower threshold (PILTx).

To further control when an interrupt occurs, the APDS-9190 provides an interrupt persistence feature. This feature allows the user to specify a number of conversion cycles for which an event exceeding the proximity interrupt threshold must persist (PPERS) before actually generating an interrupt. Refer to the register descriptions for details on the length of the persistence.

State Diagram

The following shows a more detailed flow for the state machine. The device starts in the sleep mode. The PON bit is written to enable the device. If the PEN bit is set, the state machine will step through the proximity states of proximity accumulate and then proximity ADC conversion. As soon as the conversion is complete, the state machine will move to the following state.

If the WEN bit is set, the state machine will then cycle through the wait state. If the WLONG bit is set, the wait cycles are extended by 12x over normal operation.

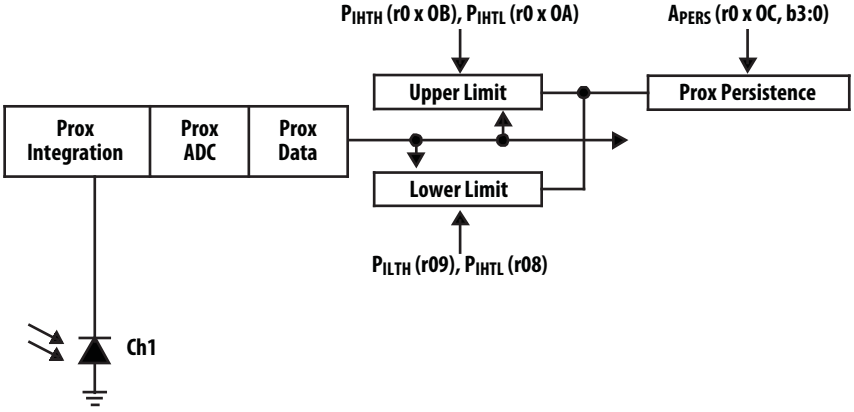

Figure 10. Programmable Interrupt

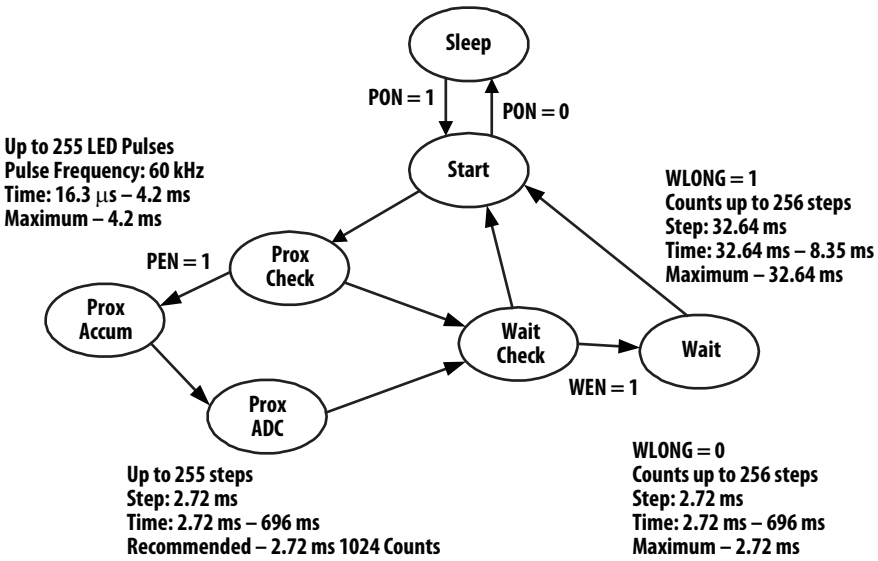

Figure 11. Extended State Diagram

Power Management

Power consumption can be controlled through the use of the wait state timing since the wait state consumes only 70 µA of power. The following shows an example of using the power management feature to achieve an average power consumption of 140 µA of current with 4 – 100 mA pulses of proximity detection.

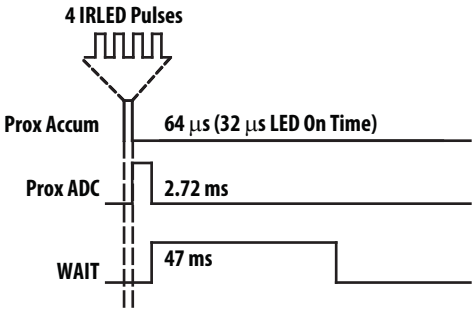

Figure 12. Power Consumption Calculations

Example: 50 ms Cycle Time

State	Duration	Current(mA)
Prox Accum (LED On)	0.064 (0.032)	100
Prox ADC	2.72	0.175
Wait	47	0.070
Avg = ((0.032 x 100) + (2.72 x 0.175) + (47 x 0.070)) ÷ 50 = 140 µA		

BASIC SOFTWARE OPERATION

The following pseudo-code shows how to do basic initialization of the APDS-9190.

```
uint8 PTIME,WTIME,PPCOUNT;
WTIME = 0xff; // 2.7ms – minimum Wait time
PTIME = 0xff; // 2.7ms – minimum Prox integration time
PPCOUNT = 1; // Minimum prox pulse count
WriteRegData(0, 0); //Disable and Powerdown
WriteRegData (2, PTIME);
WriteRegData (3, WTIME);
WriteRegData (0xe, PPCOUNT);
uint8 PDRIVE, PDIODE, PGAIN, AGAIN;
PDRIVE = 0; //100mA of LED Power
PDIODE = 0x20; // Ch1 Diode
PGAIN = 0; //1x Prox gain
WriteRegData (0xf, PDRIVE | PDIODE | PGAIN | AGAIN);
uint8 WEN, PEN, PON;
WEN = 8; // Enable Wait
PEN = 4; // Enable Prox
PON = 1; // Enable Power On
WriteRegData (0, WEN | PEN | PON); // WriteRegData(0,0x0f);
Wait(12); //Wait for 12 ms
int Prox_data;
    Prox_data = Read_Word(0x18);
    WriteRegData(uint8 reg, uint8 data)
    {
    m_I2CBus.WriteI2C(0x39, 0x80 | reg, 1, &data);
    }
    uint16 Read_Word(uint8 reg);
    {
    uint8 barr[2];
    m_I2CBus.ReadI2C(0x39, 0xA0 | reg, 2, ref barr);
    return (uint16)(barr[0] + 256 * barr[1]);
```

I²C Protocol

Interface and control of the APDS-9190 is accomplished through an I²C serial compatible interface (standard or fast mode) to a set of registers that provide access to device control functions and output data. The device supports a single slave address of 0x39 hex using 7 bit addressing protocol. (Contact factory for other addressing options.)

The I²C standard provides for three types of bus transaction: read, write and a combined protocol. During a write operation, the first byte written is a command byte followed by data. In a combined protocol, the first byte written is the command byte followed by reading a series of bytes. If a read command is issued, the register address from the previous command will be used for data access. Likewise, if the MSB of the command is not set, the device will write a series of bytes at the address stored in the last valid command with a register address. The command byte contains either control information or a 5 bit register address. The control commands can also be used to clear interrupts. For a complete description of I²C protocols, please review the I²C Specification at: http://www.NXP.com

Start and Stop conditions

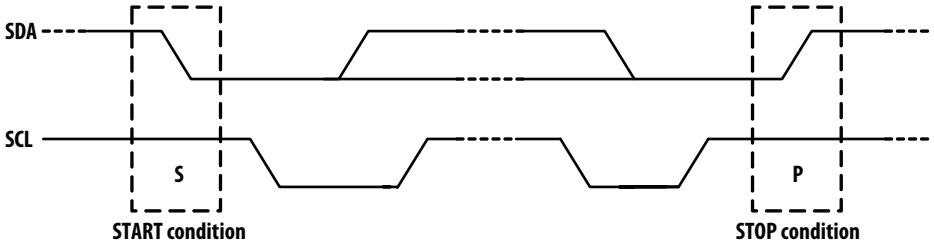

Data transfer on I²C-bus

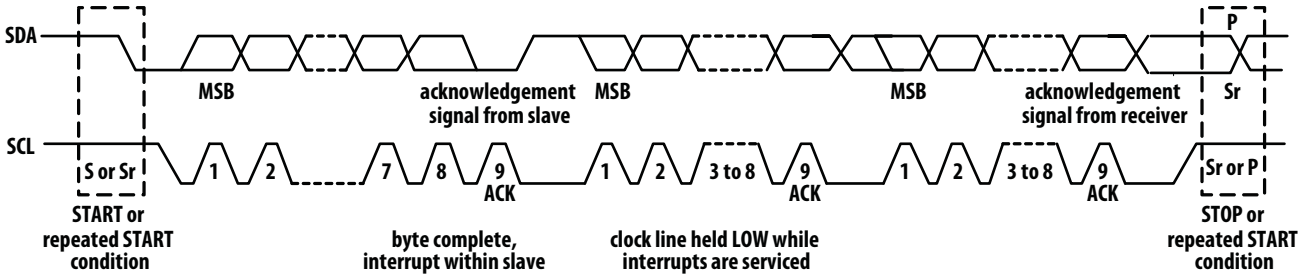

A complete data transfer

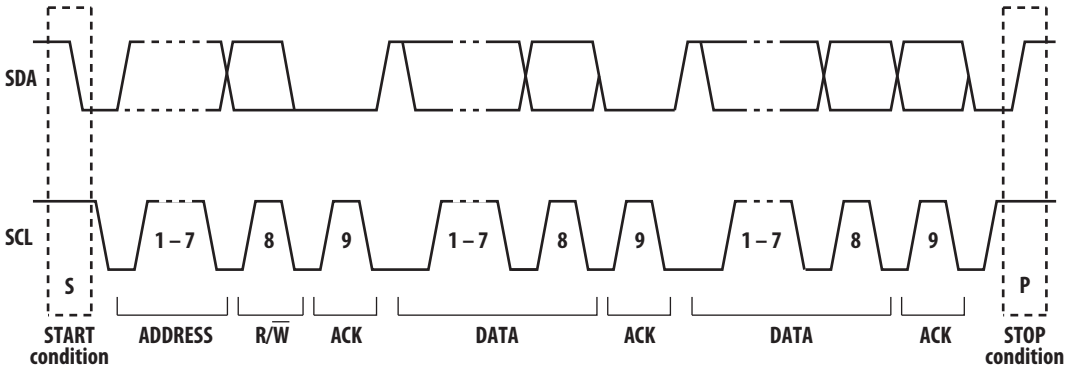

A	Acknowledge (0)
N	Not Acknowledged (1)
P	Stop Condition
R	Read (1)
S	Start Condition
Sr	Repeated Start Condition
W	Write (0)
…	Continuation of protocol

	Master-to-Slave
	Slave-to-Master

I²C Write Protocol

1	7	1	1	8	1	8	1	1
S	Slave Address	W	A	Command Code	A	Data	A	P

I²C Write Protocol (Clear Interrupt)

1	7	1	1	8	1	1
S	Slave Address	W	A	Command Code	A	P

I²C Write Word Protocol

1	7	1	1	8	1	8	1	8	1	1
S	Slave Address	W	A	Command Code	A	Data Low	A	Data High	A	P

I²C Read Protocol – Combined Format

1	7	1	1	8	1	1	7	1	1	8	1	1
S	Slave Address	W	A	Command Code	A	Sr	Slave Address	R	A	Data High	N	P

I²C Read Word Protocol

1	7	1	1	8	1	1	7	1	1	8	1
S	Slave Address	W	A	Command Code	A	Sr	Slave Address	R	A	Data Low	A

8	1	1
Data High	N	P

Register Set

The APDS-9190 is controlled and monitored by data registers and a command register accessed through the serial interface. These registers provide for a variety of control functions and can be read to determine results of the ADC conversions.

Address	Resister Name	R/W	Register Function	Reset Value
–	COMMAND	W	Specifies register address	0x00
0x00	ENABLE	R/W	Enable of states and interrupts	0x00
0x02	PTIME	R/W	Proximity ADC time	0xFF
0x03	WTIME	R/W	Wait time	0xFF
0x08	PILTL	R/W	Proximity interrupt low threshold low byte	0x00
0x09	PILTH	R/W	Proximity interrupt low threshold hi byte	0x00
0x0A	PIHTL	R/W	Proximity interrupt hi threshold low byte	0x00
0x0B	PIHTH	R/W	Proximity interrupt hi threshold hi byte	0x00
0x0C	PERS	R/W	Interrupt persistence filters	0x00
0x0D	CONFIG	R/W	Configuration	0x00
0x0E	PPCOUNT	R/W	Proximity pulse count	0x00
0x0F	CONTROL	R/W	Gain control register	0x00
0x11	REV	R	Revision Number	Rev
0x13	STATUS	R	Device status	0x00
0x18	PDATAL	R	Proximity ADC low data register	0x00
0x19	PDATAH	R	Proximity ADC high data register	0x00

The mechanics of accessing a specific register depends on the specific protocol used. See the section on I^2C protocols on the previous pages. In general, the COMMAND register is written first to specify the specific control/status register for following read/write operations.

Command Register

The command registers specifies the address of the target register for future write and read operations.

	7	6	5	4	3	2	1	0	
COMMAND	CMD	Type		Add					--

Field	Bits	Description	
Command	7	Select Command Register. Must write as 1 when addressing COMMAND register.	
Type	6:5	Selects type of transaction to follow in subsequent data transfers:	
		Field Value	**Integration Time**
		00	Repeated Byte protocol transaction
		01	Auto-Increment protocol transaction
		10	Reserved – Do not use
		11	Special function – See description below
		Byte protocol will repeatedly read the same register with each data access. Block protocol will provide auto-increment function to read successive bytes.	
Add	4:0	Address register/special function register. Depending on the transaction type, see above, this field either specifies a special function command or selects the specific control-status-register for following write or read transactions:	
		Field Value	**Read Value**
		00000	Normal – no action
		00101	Proximity interrupt clear
		00111	Proximity interrupt clear
		other	Reserved – Do not write
		Proximity Interrupt Clear. Clears any pending Proximity interrupt. This special function is self clearing.	

Enable Register (0x00)

The ENABLE register is used primarily to power the APDS-9190 device up and down as shown in Table 4.

	7	6	5	4	3	2	1	0	Address
ENABLE	Reserved	Reserved	PIEN	Reserved	WEN	PEN	Reserved	PON	0x00

Field	Bits	Description
Reserved	7:6	Reserved. Write as 0.
PIEN	5	Proximity Interrupt Enable. When asserted, permits proximity interrupts to be generated.
Reserved	4	Reserved. Write as 0.
WEN	3	Wait Enable. This bit activates the wait feature. Writing a 1 activates the wait timer. Writing a 0 disables the wait timer.
PEN	2	Proximity Enable. This bit activates the proximity function. Writing a 1 enables proximity. Writing a 0 disables proximity.
Reserved	1	Reserved. Write as 0.
PON	0	Power ON. This bit activates the internal oscillator to permit the timers and ADC channels to operate. Writing a 1 activates the oscillator. Writing a 0 disables the oscillator.

Notes:
1. A 2.7-ms delay is automatically inserted prior to entering the ADC cycle, independent of the WEN bit.
2. PON must be asserted before the ADC channels will operate correctly.
3. During writes and reads over the I^2C interface, this bit is overridden and the oscillator is enabled, independent of the state of PON.
4. A minimum interval of 2.7 ms must pass after PON is asserted before proximity can be initiated. This required time is enforced by the hardware in cases where the firmware does not provide it.

Proximity Time Control Register (0x02)

The proximity timing register controls the integration time of the proximity ADC in 2.72 ms increments. It is recommended that this register be programmed to a value of 0xff (1 cycle, 1023 bits).

Field	Bits	Description			
PTIME	7:0	**Value**	**Cycles**	**Time**	**Max Count**
		0xff	1	2.72 ms	1023

Wait Time Register (0x03)

Wait time is set 2.72 ms increments unless the WLONG bit is asserted in which case the wait times are 12x longer. WTIME is programmed as a 2's complement number.

Field	Bits	Description			
WTIME	7:0	**Register Value**	**Wait Time**	**Time (WLONG = 0)**	**Time (WLONG = 1)**
		0xff	1	2.72 ms	0.032 sec
		0xb6	74	201.29 ms	2.37 sec
		0x00	256	696.32 ms	8.19 sec

Notes:
1. The Write Byte protocol cannot be used when WTIME is greater than 127.
2. The Proximity Wait Time Register should be configured before PEN is asserted.

Proximity Interrupt Threshold Register (0x08 – 0x0B)

The proximity interrupt threshold registers provide the values to be used as the high and low trigger points for the comparison function for interrupt generation. If the value generated by proximity channel crosses below the lower threshold specified, or above the higher threshold, an interrupt is signaled to the host processor.

Register	Address	Bits	Description
PILTL	0x08	7:0	Proximity ADC channel low threshold lower byte
PILTH	0x09	7:0	Proximity ADC channel low threshold upper byte
PIHTL	0x0A	7:0	Proximity ADC channel high threshold lower byte
PIHTH	0x0B	7:0	Proximity ADC channel high threshold upper byte

Persistence Register (0x0C)

The persistence register controls the filtering interrupt capabilities of the device. Configurable filtering is provided to allow interrupts to be generated after each ADC integration cycle or if the ADC integration has produced a result that is outside of the values specified by threshold register for some specified amount of time.

	7	6	5	4	3	2	1	0	
PERS	PPERS				Reserved				0x0c

Field	Bits	Description		
PPERS	7:4	Proximity interrupt persistence. Controls rate of proximity interrupt to the host processor.		
		Field Value	**Meaning**	**Interrupt Persistence Function**
		0000	**Every**	Every proximity cycle generates an interrupt
		0001	**1**	1 consecutive proximity values out of range
		...	**...**	...
		1111	**15**	15 consecutive proximity values out of range

Configuration Register (0x0D)

The configuration register sets the wait long time.

	7	6	5	4	3	2	1	0	
CONFIG	Reserved						WLONG	Reserved	0x0D

Field	Bits	Description
Reserved	7:2	Reserved. Write as 0.
WLONG	1	Wait Long. When asserted, the wait cycles are increased by a factor 12x from that programmed in the WTIME register.
Reserved	0	Reserved. Write as 0.

Proximity Pulse Count Register (0x0E)

The proximity pulse count register sets the number of proximity pulses that will be transmitted. PPCOUNT defines the number of pulses to be transmitted at a 62.5 kHz rate.

	7	6	5	4	3	2	1	0	
PPCOUNT	PPCOUNT								0x0E

Field	Bits	Description
PPCOUNT	7:0	Proximity Pulse Count. Specifies the number of proximity pulses to be generated.

Control Register (0x0F)

The Gain register provides eight bits of miscellaneous control to the analog block. These bits typically control functions such as gain settings and/or diode selection.

	7	6	5	4	3	2	1	0	
CONTROL	PDRIVE		PDIODE		PGAIN		Reserved		0x0F

Field	Bits	Description	
PDRIVE	7:6	LED Drive Strength.	
		Field Value	**LED Strength**
		00	100 mA
		01	50 mA
		10	25 mA
		11	12.5 mA
PDIODE	5:4	Proximity Diode Select.	
		Field Value	**DIODE Selection**
		00	Reserved
		01	Reserved
		10	Proximity uses the CH1 diode
		11	Reserved
PGAIN	3:2	Proximity Gain Control.	
		Field Value	**Proximity Gain Value**
		00	1X Gain
		01	Reserved
		10	Reserved
		11	Reserved
Reserved	1:0	Reserved. Write as 0.	

Rev ID Register (0x11)

The Rev ID register provides the silicon revision number. The Rev ID is a read-only register whose value never changes.

	7	6	5	4	3	2	1	0	
REV	REV ID								0x11

Field	Bits	Description
REV ID	7:0	Revision number identification
		0x01

Status Register (0x13)

The Status Register provides the internal status of the device. This register is read only.

	7	6	5	4	3	2	1	0	
STATUS	Reserved	Reserved	PINT	Reserved	Reserved	Reserved	PVALID	Reserved	0x13

Field	Bits	Description
Reserved	7:6	Reserved.
PINT	5	Proximity Interrupt. Indicates that the device is asserting a proximity interrupt.
Reserved	4:2	Reserved.
PVALID	1	Proximity Interrupt. Indicates that the device is asserting a proximity interrupt.
Reserved	0	Reserved.

Proximity DATA Register (0x18 – 0x19)

Proximity data is stored as a 16-bit value. To ensure the data is read correctly, a two byte read I^2C transaction should be utilized with a read word protocol bit set in the command register. With this operation, when the lower byte register is read, the upper eight bits are stored into a shadow register, which is read by a subsequent read to the upper byte. The upper register will read the correct value even if additional ADC integration cycles end between the reading of the lower and upper registers.

Register	Address	Bits	Description
PDATA	0x18	7:0	Proximity data low byte
PDATAH	0x19	7:0	Proximity data high byte

Application Information: Hardware

The application hardware circuit for implementing Proximity system solution is quite simple with the APDS-9190 and is shown in following figure. The 1 μF decoupling capacitors should be low ESR to reduce noise. It further recommended to maximize system performance the use of power and ground planes is recommended in the PCB. If mounted on a flexible circuit, the power and ground traces back to the PCB should be sufficiently wide enough to have a low resistance, such as < 1 ohm.

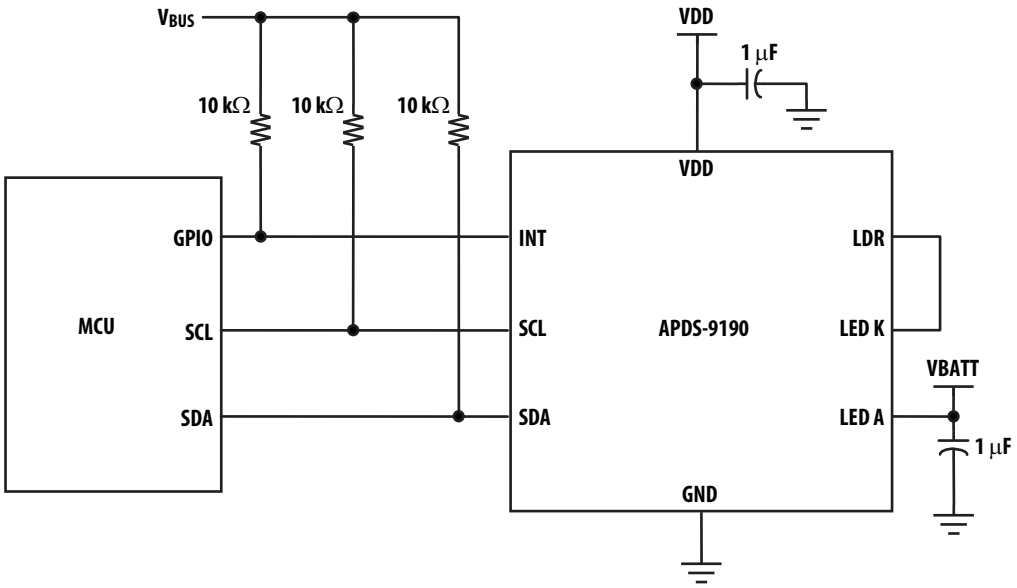

Figure 13. Circuit implementation for Proximity solution using the APDS-9190

Package Outline Dimensions

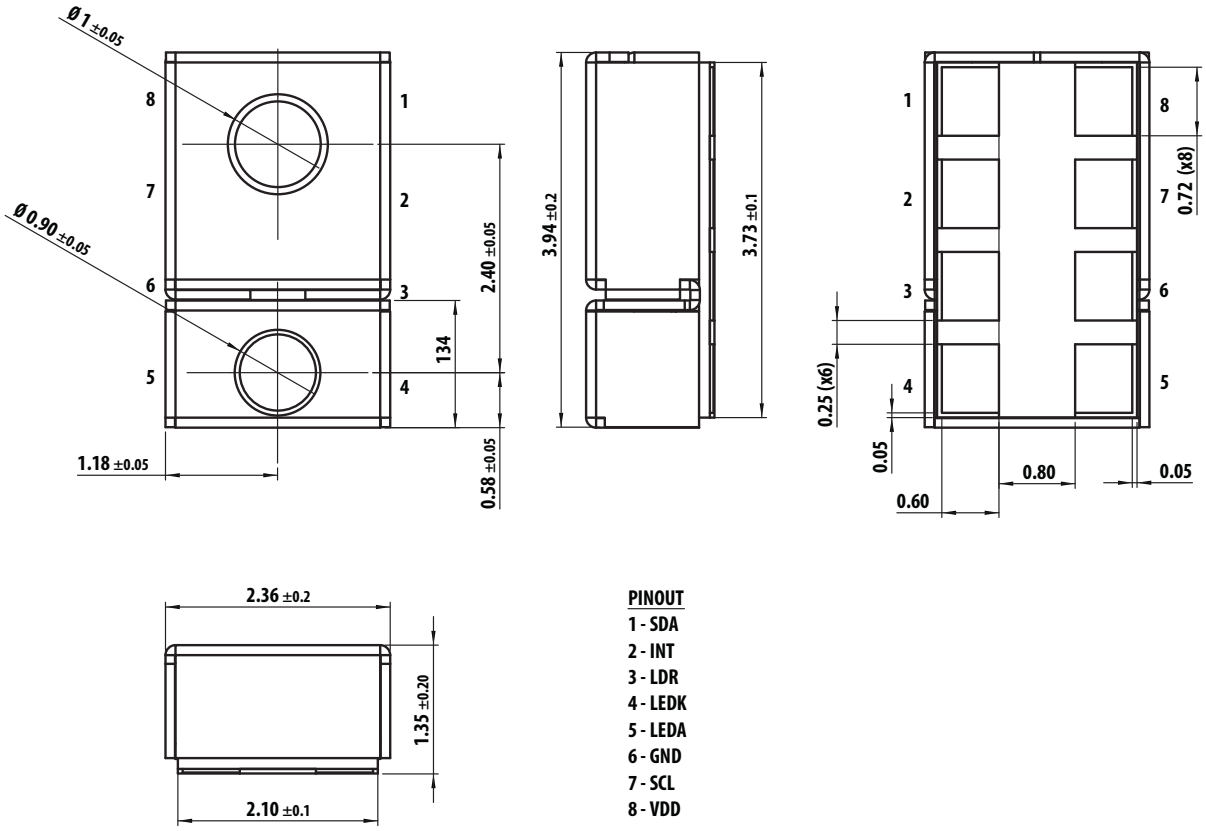

PINOUT
1 - SDA
2 - INT
3 - LDR
4 - LEDK
5 - LEDA
6 - GND
7 - SCL
8 - VDD

PCB Pad Layout

Suggested PCB pad layout guidelines for the Dual Flat No-Lead surface mount package are shown below.

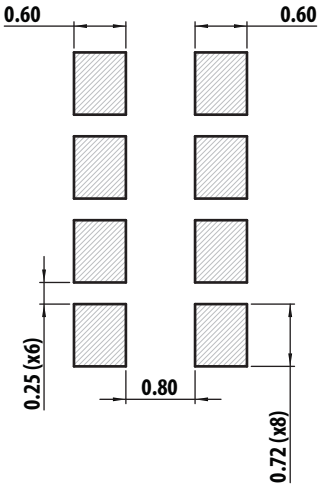

Notes: all linear dimensions are in mm.

Tape Dimensions

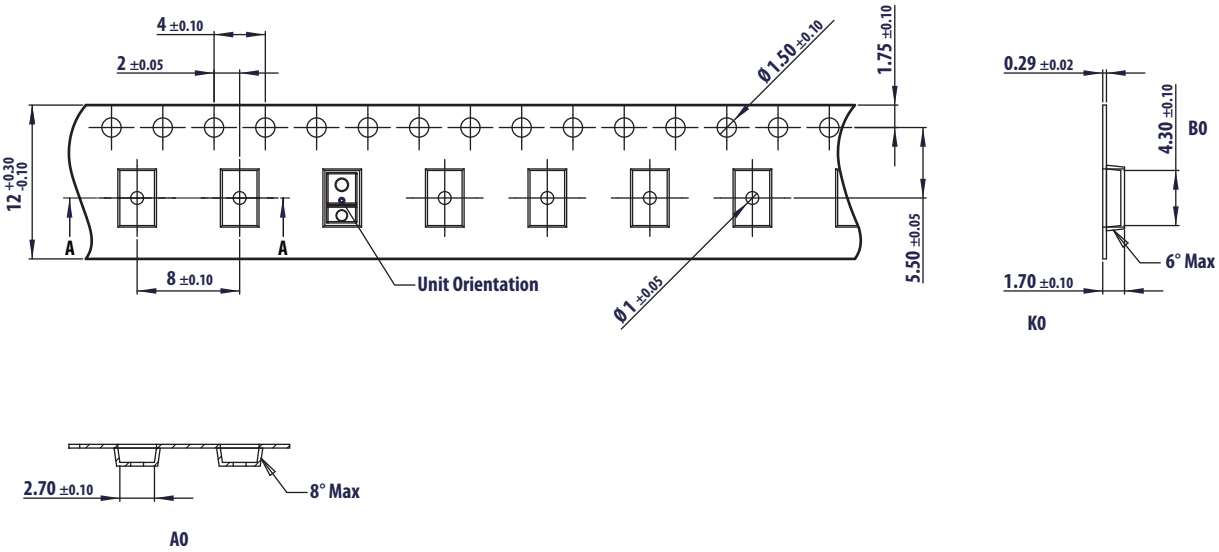

Reel Dimensions

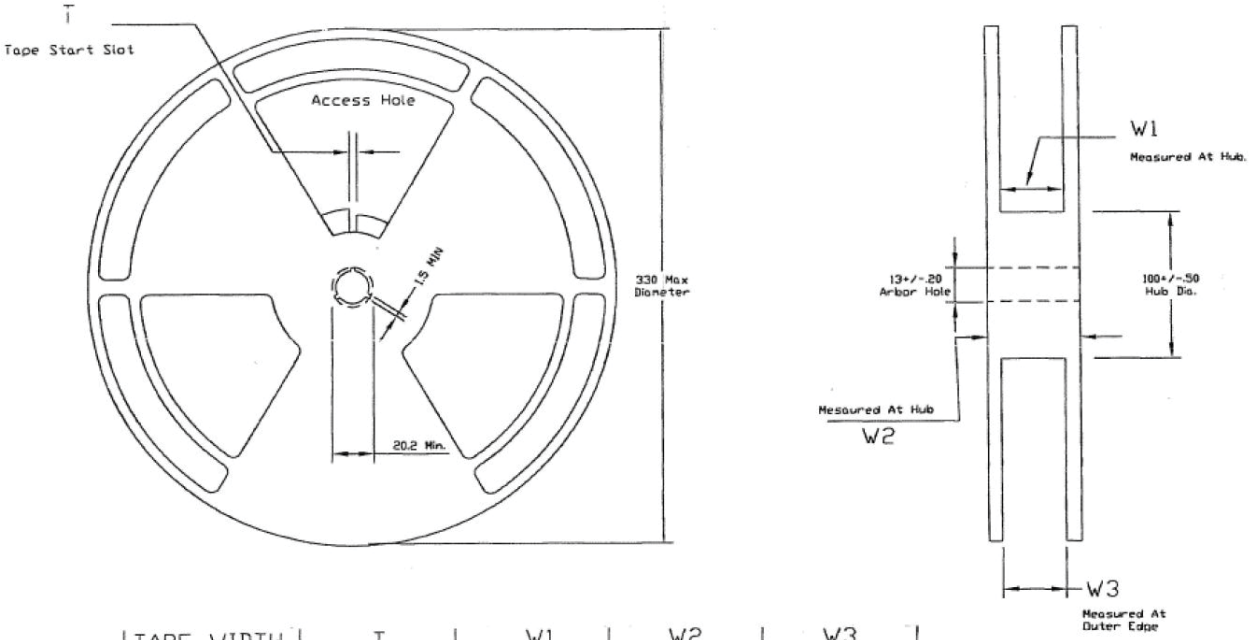

TAPE WIDTH	T	W1	W2	W3
12MM	4+/-.50	12.4+2.0 -0.0	18.4 MAX	11.9MIN 15.4MAX

All dimensions unit: mm

Moisture Proof Packaging

All APDS-9190 options are shipped in moisture proof package. Once opened, moisture absorption begins. This part is compliant to JEDEC MSL 3.

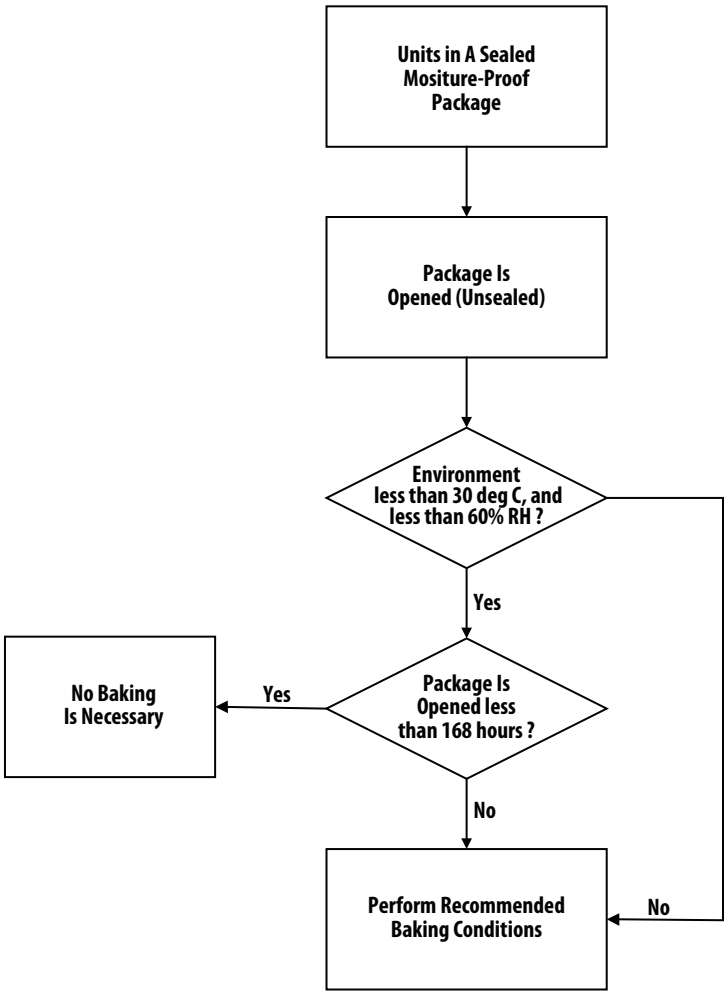

Baking Conditions:

Package	Temp.	Time
In Reels	60° C	48 hours
In Bulk	100° C	4 hours

If the parts are not stored in dry conditions, they must be baked before reflow to prevent damage to the parts.

Baking should only be done once.

Recommended Storage Conditions:

Storage Temperature	10° C to 30° C
Relative Humidity	Below 60% RH

Time from unsealing to soldering:

After removal from the bag, the parts should be soldered within 168 hours if stored at the recommended storage conditions. If times longer than 168 hours are needed, the parts must be stored in a dry box

Recommended Reflow Profile

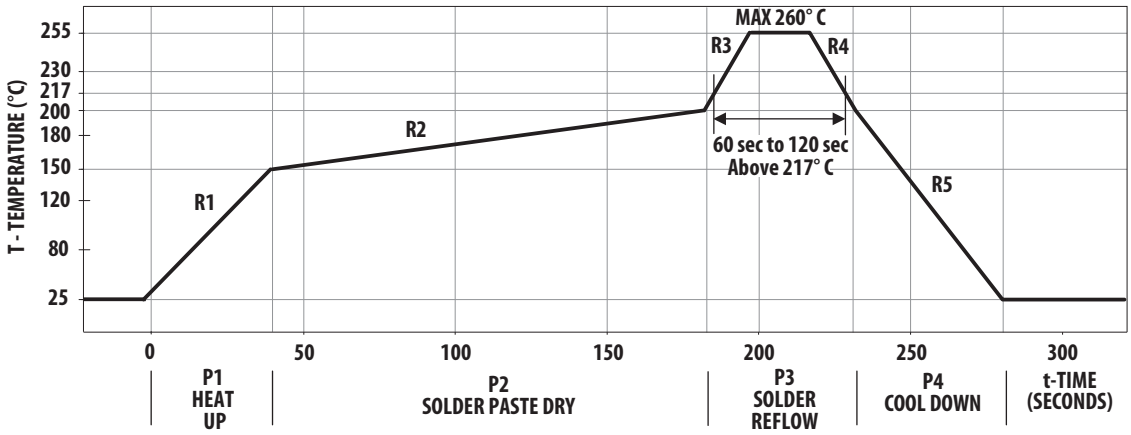

Process Zone	Symbol	ΔT	Maximum ΔT/ Δtime or Duration
Heat Up	P1, R1	25° C to 150° C	3°C/s
Solder Paste Dry	P2, R2	150° C to 200° C	100 s to 180 s
Solder Reflow	P3, R3 P3, R4	200° C to 260° C 260° C to 200° C	3°C/s -6°C/s
Cool Down	P4, R5	200° C to 25° C	-6°C/s
Time maintained above liquidus point, 217° C		> 217° C	60 s to 120 s
Peak Temperature		260° C	–
Time within 5° C of actual Peak Temperature		> 255° C	20 s to 40 s
Time 25° C to Peak Temperature		25° C to 260° C	8 mins

The reflow profile is a straight-line representation of a nominal temperature profile for a convective reflow solder process. The temperature profile is divided into four process zones, each with different ΔT/Δtime temperature change rates or duration. The ΔT/Δtime rates or duration are detailed in the above table. The temperatures are measured at the component to printed circuit board connections.

In **process zone P1**, the PC board and component pins are heated to a temperature of 150° C to activate the flux in the solder paste. The temperature ramp up rate, R1, is limited to 3° C per second to allow for even heating of both the PC board and component pins.

Process zone P2 should be of sufficient time duration (100 to 180 seconds) to dry the solder paste. The temperature is raised to a level just below the liquidus point of the solder.

Process zone P3 is the solder reflow zone. In zone P3, the temperature is quickly raised above the liquidus point of solder to 260° C (500° C) for optimum results. The dwell time above the liquidus point of solder should be between 60 and 120 seconds. This is to assure proper coalescing of the solder paste into liquid solder and the formation of good solder connections. Beyond the recommended dwell time the intermetallic growth within the solder connections becomes excessive, resulting in the formation of weak and unreliable connections. The temperature is then rapidly reduced to a point below the solidus temperature of the solder to allow the solder within the connections to freeze solid.

Process zone P4 is the cool down after solder freeze. The cool down rate, R5, from the liquidus point of the solder to 25° C (77° F) should not exceed 6° C per second maximum. This limitation is necessary to allow the PC board and component pins to change dimensions evenly, putting minimal stresses on the component.

It is recommended to perform reflow soldering no more than twice.

For product information and a complete list of distributors, please go to our web site: **www.avagotech.com**

AV02-3182EN - January 9, 2012

OCEAN CHIPS
Океан Электроники
Поставка электронных компонентов

Компания «Океан Электроники» предлагает заключение долгосрочных отношений при поставках импортных электронных компонентов на взаимовыгодных условиях!

Наши преимущества:

- Поставка оригинальных импортных электронных компонентов напрямую с производств Америки, Европы и Азии, а так же с крупнейших складов мира;
- Широкая линейка поставок активных и пассивных импортных электронных компонентов (более 30 млн. наименований);
- Поставка сложных, дефицитных, либо снятых с производства позиций;
- Оперативные сроки поставки под заказ (от 5 рабочих дней);
- Экспресс доставка в любую точку России;
- Помощь Конструкторского Отдела и консультации квалифицированных инженеров;
- Техническая поддержка проекта, помощь в подборе аналогов, поставка прототипов;
- Поставка электронных компонентов под контролем ВП;
- Система менеджмента качества сертифицирована по Международному стандарту ISO 9001;
- При необходимости вся продукция военного и аэрокосмического назначения проходит испытания и сертификацию в лаборатории (по согласованию с заказчиком);
- Поставка специализированных компонентов военного и аэрокосмического уровня качества (Xilinx, Altera, Analog Devices, Intersil, Interpoint, Microsemi, Actel, Aeroflex, Peregrine, VPT, Syfer, Eurofarad, Texas Instruments, MS Kennedy, Miteq, Cobham, E2V, MA-COM, Hittite, Mini-Circuits, General Dynamics и др.);

Компания «Океан Электроники» является официальным дистрибьютором и эксклюзивным представителем в России одного из крупнейших производителей разъемов военного и аэрокосмического назначения **«JONHON»**, а так же официальным дистрибьютором и эксклюзивным представителем в России производителя высокотехнологичных и надежных решений для передачи СВЧ сигналов **«FORSTAR»**.

AVIC JONHON

«JONHON» (основан в 1970 г.)

Разъемы специального, военного и аэрокосмического назначения:

(Применяются в военной, авиационной, аэрокосмической, морской, железнодорожной, горно- и нефтедобывающей отраслях промышленности)

«FORSTAR» (основан в 1998 г.)

ВЧ соединители, коаксиальные кабели, кабельные сборки и микроволновые компоненты:

(Применяются в телекоммуникациях гражданского и специального назначения, в средствах связи, РЛС, а так же военной, авиационной и аэрокосмической отраслях промышленности).

FORSTAR®

Телефон: 8 (812) 309-75-97 (многоканальный)
Факс: 8 (812) 320-03-32
Электронная почта: ocean@oceanchips.ru
Web: http://oceanchips.ru/
Адрес: 198099, г. Санкт-Петербург, ул. Калинина, д. 2, корп. 4, лит. А